AUTHENTICATED
U.S. GOVERNMENT
INFORMATION
GPO

Federal Register

12–31–03 Wednesday
Vol. 68 No. 250 Dec. 31, 2003

Pages 75385–75796

The **FEDERAL REGISTER** (ISSN 0097–6326) is published daily, Monday through Friday, except official holidays, by the Office of the Federal Register, National Archives and Records Administration, Washington, DC 20408, under the Federal Register Act (44 U.S.C. Ch. 15) and the regulations of the Administrative Committee of the Federal Register (1 CFR Ch. I). The Superintendent of Documents, U.S. Government Printing Office, Washington, DC 20402 is the exclusive distributor of the official edition. Periodicals postage is paid at Washington, DC.

The **FEDERAL REGISTER** provides a uniform system for making available to the public regulations and legal notices issued by Federal agencies. These include Presidential proclamations and Executive Orders, Federal agency documents having general applicability and legal effect, documents required to be published by act of Congress, and other Federal agency documents of public interest.

Documents are on file for public inspection in the Office of the Federal Register the day before they are published, unless the issuing agency requests earlier filing. For a list of documents currently on file for public inspection, see *http://www.nara.gov/fedreg.*

The seal of the National Archives and Records Administration authenticates the Federal Register as the official serial publication established under the Federal Register Act. Under 44 U.S.C. 1507, the contents of the **Federal Register** shall be judicially noticed.

The **Federal Register** is published in paper and on 24x microfiche. It is also available online at no charge as one of the databases on GPO Access, a service of the U.S. Government Printing Office.

The online edition of the **Federal Register** *www.access.gpo.gov/nara,* available through GPO Access, is issued under the authority of the Administrative Committee of the Federal Register as the official legal equivalent of the paper and microfiche editions (44 U.S.C. 4101 and 1 CFR 5.10). It is updated by 6 a.m. each day the **Federal Register** is published and includes both text and graphics from Volume 59, Number 1 (January 2, 1994) forward.

For more information about GPO Access, contact the GPO Access User Support Team, call toll free 1-888-293-6498; DC area 202-512-1530; fax at 202-512-1262; or via email at *gpoaccess@gpo.gov.* The Support Team is available between 7:00 a.m. and 9:00 p.m. Eastern Time, Monday–Friday, except official holidays.

The annual subscription price for the **Federal Register** paper edition is $699, or $764 for a combined **Federal Register, Federal Register** Index and List of CFR Sections Affected (LSA) subscription; the microfiche edition of the **Federal Register** including the **Federal Register** Index and LSA is $264. Six month subscriptions are available for one-half the annual rate. The charge for individual copies in paper form is $10.00 for each issue, or $10.00 for each group of pages as actually bound; or $2.00 for each issue in microfiche form. All prices include regular domestic postage and handling. International customers please add 40% for foreign handling. Remit check or money order, made payable to the Superintendent of Documents, or charge to your GPO Deposit Account, VISA, MasterCard, American Express, or Discover. Mail to: New Orders, Superintendent of Documents, P.O. Box 371954, Pittsburgh, PA 15250-7954; or call toll free 1-866-512-1800, DC area 202-512-1800; or go to the U.S. Government Online Bookstore site, *bookstore@gpo.gov.*

There are no restrictions on the republication of material appearing in the **Federal Register.**

How To Cite This Publication: Use the volume number and the page number. Example: 68 FR 12345.

Postmaster: Send address changes to the Superintendent of Documents, Federal Register, U.S. Government Printing Office, Washington DC 20402, along with the entire mailing label from the last issue received.

SUBSCRIPTIONS AND COPIES

PUBLIC

Subscriptions:

Paper or fiche	**202–512–1800**
Assistance with public subscriptions	**202–512–1806**

General online information **202–512–1530; 1–888–293–6498**

Single copies/back copies:

Paper or fiche	**202–512–1800**
Assistance with public single copies	**1–866–512–1800 (Toll-Free)**

FEDERAL AGENCIES

Subscriptions:

Paper or fiche	**202–741–6005**
Assistance with Federal agency subscriptions	**202–741–6005**

What's NEW!

Federal Register Table of Contents via e-mail

Subscribe to FEDREGTOC, to receive the **Federal Register** Table of Contents in your e-mail every day.

If you get the HTML version, you can click directly to any document in the issue.

To subscribe, go to **http://listserv.access.gpo.gov** and select:

Online mailing list archives
FEDREGTOC-L
Join or leave the list

Then follow the instructions.

What's NEW!

Regulations.gov, the award-winning Federal eRulemaking Portal

Regulations.gov is the one-stop U.S. Government web site that makes it easy to participate in the regulatory process.

Try this fast and reliable resource to find all rules published in the *Federal Register* that are currently open for public comment. Submit comments to agencies by filling out a simple web form, or use available email addresses and web sites.

The Regulations.gov e-democracy initiative is brought to you by NARA, GPO, EPA and their eRulemaking partners.

Visit the web site at: **http://www.regulations.gov**

Printed on recycled paper.

Contents

Federal Register

Vol. 68, No. 250

Wednesday, December 31, 2003

Agriculture Department
See Forest Service
See Grain Inspection, Packers and Stockyards Administration
NOTICES
Agency information collection activities; proposals, submissions, and approvals, 75483–75484

Air Force Department
NOTICES
Environmental statements; notice of intent:
New Mexico Training Range Initiative, 75496

Alcohol, Tobacco, Firearms, and Explosives Bureau
NOTICES
Agency information collection activities; proposals, submissions, and approvals, 75631–75632

Architectural and Transportation Barriers Compliance Board
NOTICES
Meetings:
Access Board, 75485

Centers for Disease Control and Prevention
NOTICES
Agency information collection activities; proposals, submissions, and approvals, 75568–75571

Centers for Medicare & Medicaid Services
RULES
Medicare:
Hospital outpatient prospective payment system (2004 CY); correction, 75442–75453

Children and Families Administration
NOTICES
Grants and cooperative agreements; availability, etc.:
Head Start programs, 75571
Organization, functions, and authority delegations:
Administration on Children, Youth and Families, et al., 75571–75572

Coast Guard
RULES
Ports and waterways safety:
Charleston Harbor, Charleston, SC; security zone, 75425–75427
NOTICES
Committees; establishment, renewal, termination, etc.:
Area Maritime Security Advisory Committee, 75602–75603
Pollution prevention equipment; alternative testing standards, 75603–75605

Commerce Department
See Economic Analysis Bureau
See International Trade Administration
See National Oceanic and Atmospheric Administration
See National Telecommunications and Information Administration
NOTICES
Agency information collection activities; proposals, submissions, and approvals, 75485

Comptroller of the Currency
NOTICES
Agency information collection activities; proposals, submissions, and approvals, 75728–75730

Defense Department
See Air Force Department
See Navy Department

Economic Analysis Bureau
RULES
International services surveys:
BE-25; quarterly survey of transactions with unaffiliated foreign persons in selected services and in intangible assets, 75410–75411
BE-45; quarterly survey of insurance transactions by U.S. insurance companies with foreign persons, 75408–75409

Education Department
RULES
Postsecondary education:
Federal Perkins Loan Program, et al.; technical amendments, 75427–75430
NOTICES
Agency information collection activities; proposals, submissions, and approvals, 75496

Employee Benefits Security Administration
NOTICES
Employee benefit plans; class exemptions:
Litigation settlement-related plan transactions, 75632–75640

Employment and Training Administration
NOTICES
Adjustment assistance:
Allegheny Ludlum Corp., 75640
EHV-Weidmann Industries, Inc., et al., 75640–75641
Fishing vessels—
EXCEPTION, 75641
PATRICIA DIANN, 75641
Harting, Inc. of North America, 75641
L.S. Starrett Co., Inc., 75641
Paper Converting Machine Co., 75641–75642
Paradise Fisheries, 75642
Tietex International, Ltd., 75642
Weidmann Systems International, Inc., 75642
York International Corp., 75642–75643
Grants and cooperative agreements; availability, etc.:
Workforce investment Act—
Indian and Native American Employment and Training Programs, 75643–75652

Energy Department
See Federal Energy Regulatory Commission
NOTICES
Natural gas exportation and importation:
BG LNG Services, 75496–75498

Environmental Protection Agency
RULES
Air quality; prevention of significant deterioration (PSD):
Permit determinations, etc.—
Virgin Islands, 75781–75785
Pesticides; tolerances in food, animal feeds, and raw agricultural commodities:
Cyprodinil, 75438–75442
Fluroxypyr, 75430–75438
PROPOSED RULES
Air quality; prevention of significant deterioration (PSD):
Permit determinations, etc.—
Virgin Islands, 75785–75786
NOTICES
Air pollution control:
State operating permit programs—
Louisiana, 75500
Air pollution control; new motor vehicles and engines:
California pollution control standards—
Federal preemption waiver request and within-scope waiver request; decision, 75500–75502
Meetings:
Children's Health Protection Advisory Committee, 75502–75503
National Drinking Water Advisory Council, 75503
Pesticides; tolerances in food, animal feeds, and raw agricultural commodities:
Clothianidin, 75504–75507
Reports and guidance documents; availability, etc.:
Clean Water Act—
Pollutants analysis; test procedures, 75507–75515
Water pollution control:
Clean Water Act—
Effluent guidelines program plan (2004-2005), 75515–75531
Sewage sludge; use or disposal standards; regulatory review, 75531–75552
Water quality criteria:
Copper; aquatic life criteria document, 75552–75555
Diazinon; aquatic life criteria document, 75555–75557

Executive Office of the President
See Presidential Documents

Farm Credit Administration
NOTICES
Strategic plan (2004-2009 FY), 75557–75558

Federal Aviation Administration
RULES
Airworthiness directives:
Agusta S.p.A., 75394–75396
Anjou Aeronautique, 75391–75394
Boeing, 75397–75399
McDonnell Douglas, 75396–75397
Pratt & Whitney, 75400–75406
Airworthiness standards:
Bird ingestion; technical amendments, 75390–75391
Class D and E airspace, 75406
Class E airspace, 75406
Standard instrument approach procedures, 75406–75408
Workplace drug and alcohol testing programs:
Drug and alcohol management information system reporting forms, 75455–75466
PROPOSED RULES
Airworthiness directives:
Boeing, 75469–75471
Bombardier, 75471–75473
Empresa Brasileira de Aeronautica S.A., 75468–75469
VOR Federal airways, 75473–75474
NOTICES
Exemption petitions; summary and disposition, 75708–75710
Passenger facility charges; applications, etc.:
Buffalo Niagara International Airport, NY, 75710–75711
Key West International Airport, FL, 75711
Springfield-Branson Regional Airport, MO, 75711–75712
Technical standard orders:
Aircraft earth station equipment; geosynchronous orbit aeronautical mobile satellite services, 75712
VDL Mode 3 communications equipment operating within frequency range 117.975 to 137.000 MHz, 75713

Federal Communications Commission
PROPOSED RULES
Common carrier services:
Incumbent local exchange carriers—
Accounting and ARMIS reporting requirements; review by Federal-State Joint Conference on Accounting Issues; effective date delay, 75478
NOTICES
Agency information collection activities; proposals, submissions, and approvals, 75558–75662
Common carrier services:
Telecommunications carrier eligibility designation petitions—
ALLTEL Communications, Inc.; Georgia service area, 75563–75564
ALLTEL Communications, Inc.; North Carolina service area, 75562–75563

Federal Deposit Insurance Corporation
NOTICES
Agency information collection activities; proposals, submissions, and approvals, 75728–75730

Federal Election Commission
RULES
Common carrier services:
Federal-State Joint Conference on Accounting Issues; recommendations, 75455

Federal Emergency Management Agency
RULES
National Flood Insurance Program:
Private sector property insurers; assistance, 75453–75455
NOTICES
Agency information collection activities; proposals, submissions, and approvals, 75605–75606
Grants and cooperative agreements; availability, etc.:
Pre-Disaster Mitigation Program, 75606–75611

Federal Energy Regulatory Commission
NOTICES
Applications, hearings, determinations, etc.:
Acadia Power Partners, LLC et al., 75498–75500

Federal Highway Administration
NOTICES
Environmental statements; notice of intent:
Chittenden County, VT, 75713–75714
Denver, Boulder, Broomfield, Adams, Larimer, and Weld Counties, CO, 75714–75715

Federal Maritime Commission
NOTICES
Agreements filed, etc., 75564–75565

Federal Motor Carrier Safety Administration
RULES
Workplace drug and alcohol testing programs:
Drug and alcohol management information system reporting forms, 75455–75466
PROPOSED RULES
Motor carrier safety standards:
Intermodal container chassis and trailers; general inspection, repair, and maintenance requirements; withdrawal
NOTICES
Motor carrier safety standards:
Driver qualifications—
Austin, Ronald G., et al.; vision requirement exemptions, 75715–75717

Federal Railroad Administration
RULES
Workplace drug and alcohol testing programs:
Drug and alcohol management information system reporting forms, 75455–75466

Federal Reserve System
NOTICES
Agency information collection activities; proposals, submissions, and approvals, 75728–75730
Banks and bank holding companies:
Change in bank control, 75565
Formations, acquisitions, and mergers, 75565–75566
Permissible nonbanking activities, 75566–75567
Meetings:
Bank of America Corp., Charlotte, NC, FleetBoston Financial Corp. Boston, MA; merger, 75567–75568

Federal Transit Administration
RULES
Workplace drug and alcohol testing programs:
Drug and alcohol management information system reporting forms, 75455–75466
NOTICES
Environmental statements; notice of intent:
Denver, Boulder, Broomfield, Adams, Larimer, and Weld Counties, CO, 75714–75715

Financial Management Service
See Fiscal Service

Fiscal Service
NOTICES
Surety companies acceptable on Federal bonds:
American Southern Insurance Co., 75730

Fish and Wildlife Service
NOTICES
Endangered and threatened species permit applications, 75618–75619

Food and Drug Administration
RULES
Food additives:
Acesulfame potassium, 75411–75413
Human drugs:
Pediculicide products (OTC); amendment of final monograph, 75414–75418
NOTICES
Agency information collection activities; proposals, submissions, and approvals, 75572–75574
Meetings:
Advisory committees; 2004 schedule, 75574–75577
Biological Response Modifiers Advisory Committee, 75577
Memorandums of understanding:
Centers for Disease Control and Prevention and FDA; coordination and collaborative framework and information exchanges principles and procedures, 75577–75581
Health Products and Food Branch, Health Canada of Canada and FDA; enhance and stregthen exchange of information about therapeutic products, 75581–75585
Reports and guidance documents; availability, etc.:
Over-the-counter drug products; safety and efficacy review, 75585–75591
Pharmaceutical products intended for human or animal use; sharing documents and/or information between FDA and European Commission, 75591–75600

Forest Service
NOTICES
Meetings:
Resource Advisory Committees—
Tehama County, 75484–75485

Geological Survey
NOTICES
Meetings:
Scientific Earthquake Studies Advisory Committee, 75619

Grain Inspection, Packers and Stockyards Administration
RULES
Practice and procedure:
Update of budget control numbers; technical amendments, 75387–75388

Health and Human Services Department
See Centers for Disease Control and Prevention
See Centers for Medicare & Medicaid Services
See Children and Families Administration
See Food and Drug Administration
See Health Resources and Services Administration
See National Institutes of Health
NOTICES
Meetings:
Public Health Preparedness, Secretary's Council, 75568

Health Resources and Services Administration
NOTICES
Agency information collection activities; proposals, submissions, and approvals, 75600–75601
Meetings:
Rural Health and Human Service National Advisory Committee, 75601

Homeland Security Department
See Coast Guard
See Federal Emergency Management Agency
See Transportation Security Administration

Housing and Urban Development Department
NOTICES
Agency information collection activities; proposals, submissions, and approvals, 75612–75617

Indian Affairs Bureau
NOTICES
Liquor and tobacco sale or distribution ordinance:
Cheyenne and Arapaho Tribes, OK, 75619–75625

Interior Department
See Fish and Wildlife Service
See Geological Survey
See Indian Affairs Bureau
See Land Management Bureau
See National Indian Gaming Commission
See Surface Mining Reclamation and Enforcement Office
NOTICES
Agency information collection activities; proposals, submissions, and approvals, 75617–75618

International Trade Administration
NOTICES
Antidumping:
Canned pineapple fruit from—
Thailand, 75485–75486
Ready-to-cook kosher chicken and parts from—
Canada, 75486–75488
Stainless steel wire rod from—
Spain, 75488
Tapered roller bearings and parts, finished and unfinished, from—
China, 75489–75490
Countervailing duties:
Hard red spring wheat from—
Canada, 75490
Tariff rate quotas:
Worsted wool fabrics, 75490–75491

International Trade Commission
NOTICES
Import investigations:
U.S.-Andean Countries Free Trade Agreement; probable economic effect of duty-free imports, 75629–75630
U.S.-Panama Free Trade Agreement; probable economic effect of duty free imports, 75630–75631

Justice Department
See Alcohol, Tobacco, Firearms, and Explosives Bureau

Labor Department
See Employee Benefits Security Administration
See Employment and Training Administration
See Occupational Safety and Health Administration

Land Management Bureau
NOTICES
Closure of public lands:
Arizona, 75625
New Mexico, 75625–75626
Utah, 75626–75627
Meetings:
Resource Advisory Councils—
Central Montana, 75627
Opening of public lands:
Nevada, 75627–75628
Withdrawal and reservation of lands:
California, 75628
New Mexico, 75628–75629

Maritime Administration
NOTICES
Coastwise trade laws; administrative waivers:
AMICI, 75717
CATTELYA, 75717–75718
JUSTUS, 75718
MEMORY MAKER, 75718–75719
MON AMIE, 75719
VERITAS, 75719–75720

National Indian Gaming Commission
NOTICES
Indian Gaming Regulatory Act:
Fee rates, 75652

National Institutes of Health
NOTICES
Meetings:
National Institute of Allergy and Infectious Diseases, 75602
National Institute of Arthritis and Musculoskeletal and Skin Diseases, 75601–75602
National Institute of Mental Health, 75601

National Labor Relations Board
NOTICES
Agency information collection activities; proposals, submissions, and approvals, 75652

National Oceanic and Atmospheric Administration
RULES
Fishery conservation and management:
Atlantic highly migratory species—
Atlantic bluefin tuna, 75466–75467
NOTICES
Committees; establishment, renewal, termination, etc.:
Hawaiian Islands Humpback Whale National Marine Sanctuary Advisory Council, 75491
Meetings:
Pacific Fishery Management Council, 75491
South Atlantic Fishery Management Council, 75491–75492
National Marine Sanctuary Program; indirect cost rates, 75492–75493
Permits:
Endangered and threatened species, 75493–75494
Marine mammals, 75494–75495

National Science Foundation
NOTICES
Agency information collection activities; proposals, submissions, and approvals, 75652–75653

National Telecommunications and Information Administration
NOTICES
Agency information collection activities; proposals, submissions, and approvals, 75495

Navy Department
NOTICES
Environmental statements; availability, etc.:
Fox Island Laboratory, Fox Island, WA; meeting, 75496
Patent licenses; non-exclusive, exclusive, or partially exclusive:
Seahawk Biosystems Corp., 75496

Nuclear Regulatory Commission
RULES
Technical amendments, 75388–75390
NOTICES
Environmental statements; availability, etc.:
Enviro-Test Laboratories, Casper, WY, 75653–75656

Environmental statements; notice of intent:
System Energy Resources, Inc., 75656–75658
Meetings; Sunshine Act, 75658

Occupational Safety and Health Administration
RULES
Safety and health standards, etc.:
Respiratory protection; withdrawn, 75775–75780
PROPOSED RULES
Occupational safety and health standards:
2-methoxyethanol, 2-ethoxyethanol, and acetates (glycol ethers); occupational exposure; withdrawn, 75475–75476
Safety and healthy standards, etc.:
Tuberculosis; occupational exposure; withdrawn, 75767–75775

Peace Corps
NOTICES
Agency information collection activities; proposals, submissions, and approvals, 75658–75659

Personnel Management Office
NOTICES
Meetings:
Federal Prevailing Rate Advisory Committee, 75659

Presidential Documents
PROCLAMATIONS
Chile; free trade agreement (Proc. 7746), 75787–75791
Singapore; free trade agreement (Proc. 7747), 75793–75795
ADMINISTRATIVE ORDERS
Afghanistan; drawdown authorization (Presidential Determination No. 2004-15 of December 16, 2003), 75385

Public Debt Bureau
See Fiscal Service

Railroad Retirement Board
NOTICES
Agency information collection activities; proposals, submissions, and approvals, 75659–75660

Research and Special Programs Administration
RULES
Hazardous materials:
Materials incorporated by reference, 75733–75765
Workplace drug and alcohol testing programs:
Drug and alcohol management information system reporting forms, 75455–75466
NOTICES
Agency information collection activities; proposals, submissions, and approvals, 75720–75725
Hazardous materials:
Applications; exemptions, renewals, etc., 75725–75727
Meetings:
Pipeline Safety—
Pipeline Safety Advisory Committee, 75727–75728

Securities and Exchange Commission
NOTICES
Agency information collection activities; proposals, submissions, and approvals, 75660–75661
Consolidated Tape Association and Quotation Plans; amendments, 75661–75664
Self-regulatory organizations; proposed rule changes:
American Stock Exchange LLC, 75664–75673
Chicago Board Options Exchange, Inc., 75673–75674
Chicago Stock Exchange, Inc., 75674–75677
National Association of Securities Dealers, Inc., 75677–75701, 75704–75707
Pacific Exchange, Inc., 75701–75703
Philadelphia Stock Exchange, Inc., 75703–75704

State Department
NOTICES
Art objects; importation for exhibition:
From Fra Angelico to Bonnard: Masterpieces from the Rau Collection, 75707–75708

Surface Mining Reclamation and Enforcement Office
RULES
Permanent program and abandoned mine land reclamation plan submissions:
Indiana, 75418–75423
Kentucky, 75423–75425
PROPOSED RULES
Permanent program and abandoned mine land reclamation plan submissions:
Kentucky, 75476–75478

Surface Transportation Board
NOTICES
Railroad operation, acquisition, construction, etc.:
Lehigh Valley Rail Management, LLC, 75728

Thrift Supervision Office
NOTICES
Agency information collection activities; proposals, submissions, and approvals, 75728–75732

Transportation Department
See Federal Aviation Administration
See Federal Highway Administration
See Federal Motor Carrier Safety Administration
See Federal Railroad Administration
See Federal Transit Administration
See Maritime Administration
See Research and Special Programs Administration
See Surface Transportation Board

Transportation Security Administration
NOTICES
Aviation security:
Infrastructure fee; imposition; comment request, 75611–75612

Treasury Department
See Comptroller of the Currency
See Fiscal Service
See Thrift Supervision Office

Separate Parts In This Issue

Part II
Transportation Department, Research and Special Programs Administration, 75733–75765

Part III
Labor Department, Occupational Safety and Health Administration, 75767–75780

Part IV
Environmental Protection Agency, 75781–75786

Part V

Executive Office of the President, Presidential Documents, 75787–75791, 75793–75795

Reader Aids

Consult the Reader Aids section at the end of this issue for phone numbers, online resources, finding aids, reminders, and notice of recently enacted public laws.

To subscribe to the Federal Register Table of Contents LISTSERV electronic mailing list, go to http://listserv.access.gpo.gov and select Online mailing list archives, FEDREGTOC-L, Join or leave the list (or change settings); then follow the instructions.

CFR PARTS AFFECTED IN THIS ISSUE

A cumulative list of the parts affected this month can be found in the Reader Aids section at the end of this issue.

3 CFR

Proclamations:

7746 75789
7747 75793

Executive Orders:

11651 (See Procs. 7746, 7747) 75789, 75793

Administrative Orders:

Presidential Determinations:
No. 2004-15 of December 16, 2003 75385

9 CFR

201 75387
203 75387

10 CFR

1 75388
4 75388
19 75388
35 75388
39 75388
40 75388
50 75388

14 CFR

23 75390
33 75390
39 (6 documents) 75391, 75394, 75396, 75397, 75400, 75403
71 (2 documents) 75406
97 75406
121 75455

Proposed Rules:

39 (3 documents) 75468, 75469, 75471
71 75473

15 CFR

801 (2 documents) 75408, 75410

21 CFR

172 75411
358 75414

29 CFR

1910 75776

Proposed Rules:

1910 (2 documents) 75475, 75768

30 CFR

914 75418
917 75423

Proposed Rules:

917 75476

33 CFR

165 75425

34 CFR

674 75427
682 75427
685 75427

40 CFR

69 75782
180 (2 documents) 75430, 75438

Proposed Rules:

69 75786

42 CFR

410 75442
419 75442

44 CFR

62 75453

47 CFR

32 75455

Proposed Rules:

32 75478

49 CFR

171 75734
172 75734
173 75734
174 75734
175 75734
176 75734
177 75734
178 75734
179 75734
180 75734
199 75455
219 75455
382 75455
655 75455

Proposed Rules:

390 75478
396 75478

50 CFR

635 75466

Federal Register
Vol. 68, No. 250
Wednesday, December 31, 2003

Presidential Documents

Title 3—

The President

Presidential Determination No. 2004–15 of December 16, 2003

Determination to Authorize Drawdown for Afghanistan

Memorandum for the Secretary of State [and] the Secretary of Defense

Consistent with the authority vested in me by the Constitution and laws of the United States, including section 202 and other relevant provisions of the Afghanistan Freedom Support Act (Public Law 107–327) and section 506 of the Foreign Assistance Act of 1961, as amended, 22 U.S.C. 2318, I hereby direct the drawdown of up to $135 million of defense articles, defense services, and military education and training from the Department of Defense for the Transitional Islamic State of Afghanistan.

The Secretary of State is authorized and directed to report this determination to the Congress and to arrange for its publication in the **Federal Register**.

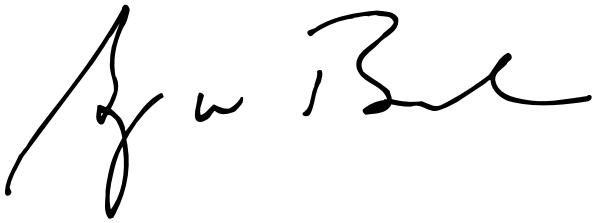

THE WHITE HOUSE,
Washington, December 16, 2003.

[FR Doc. 03–32300
Filed 12–30–03; 8:45 am]
Billing code 4710–10–P

Rules and Regulations

Federal Register
Vol. 68, No. 250
Wednesday, December 31, 2003

This section of the FEDERAL REGISTER contains regulatory documents having general applicability and legal effect, most of which are keyed to and codified in the Code of Federal Regulations, which is published under 50 titles pursuant to 44 U.S.C. 1510.

The Code of Federal Regulations is sold by the Superintendent of Documents. Prices of new books are listed in the first FEDERAL REGISTER issue of each week.

DEPARTMENT OF AGRICULTURE

Grain Inspection, Packers and Stockyards Administration

9 CFR Parts 201 and 203

Update Office of Management and Budget Control Numbers

AGENCY: Grain Inspection, Packers and Stockyards Administration, USDA.

ACTION: Technical amendment.

SUMMARY: In compliance with the Paperwork Reduction Act, this technical amendment revises the control numbers assigned by the Office of Management and Budget approving our information collection activities. The purpose of this action is to update the control numbers in the Code of Federal Regulations. This amendment brings the regulations up to date with the current control numbers.

EFFECTIVE DATE: December 31, 2003.

FOR FURTHER INFORMATION CONTACT: Tess Butler, Regulatory Specialist, USDA GIPSA, (202) 720–7486, 1400 Independence Avenue, SW, Room 1647–S, Washington, DC 20250–3604, or via e-mail at *h.tess.butler@usda.gov*.

SUPPLEMENTARY INFORMATION: The Grain Inspection, Packers and Stockyards Administration (GIPSA) administers and enforces the Packers and Stockyards Act of 1921, as amended and supplemented (7 U.S.C. 181–229) (P&S Act). The P&S Act prohibits unfair, deceptive, and fraudulent practices by livestock market agencies, dealers, stockyard owners, meat packers, swine contractors, and live poultry dealers in the livestock, poultry, and meatpacking industries.

The P&S Act authorizes information collection for the purpose of enforcing the P&S Act and regulations and to conduct studies as requested by Congress. The information is needed for us to carry out our responsibilities under the P&S Act. The information is necessary to monitor and examine financial, competitive, and trade practices in the livestock, meat packing, and poultry industries.

This amendment corrects the displayed control numbers, as required by the Paperwork Reduction Act (44 U.S.C. 3501–3520) and the Office of Management and Budget (OMB) regulations (5 CFR part 1320). OMB regulations provide options for the display of control numbers to show the OMB approval of information collection activities; we will continue to use the option of displaying the OMB control numbers at the end of each regulation that requires recordkeeping, reporting, or other information collection activity.

The information collection activities approved under OMB control number 0580–0015, are the reporting, recordkeeping, and other information collection requirements in 9 CFR part 201, Regulations Under the Packers and Stockyards Act, and in 9 CFR part 203, Statements of General Policy Under the Packers and Stockyards Act. Formerly, these activities were approved under OMB control number 0590–0001 for the Packers and Stockyards Administration. After GIPSA was established, OMB assigned the new control number. Therefore, occurrences of 0590–0001 in the CFR need to be revised to 0580–0015 to reflect the current OMB control number. In addition, we need to add the current OMB control number at the end of section 201.108–1 of the regulations.

There will be no changes to the regulatory text or any information collection change as a result of this technical amendment. Therefore, we find that it is unnecessary to request comments and believe that there is good cause under 5 U.S.C. 553 (d)(3), to make this amendment to parts 201 and 203 final upon publication in the **Federal Register**.

Executive Order 12866 and Regulatory Flexibility Act

The Office of Management and Budget (OMB) designated this technical amendment as not significant for the purposes of Executive Order 12866. This technical amendment updates the OMB control numbers published at the end of specific regulations and statements of general policy in the Code of Federal Regulations (CFR) in 9 CFR parts 201 and 203. The information collection requirements approved by OMB under control number 0580–0015 have been previously approved. The current approval expires on September 30, 2004. This technical amendment does not change the information collection requirements.

There will be neither costs imposed by nor benefits resulting from this technical amendment. There are no potential economic effects on small entities. This technical amendment does not make any changes to the projected reporting or recordkeeping burden imposed on small entities. Therefore, as the GIPSA Administrator, I certify that this technical amendment will not significantly impact a substantial number of small entities, as required by the Regulatory Flexibility Act (5 U.S.C. 601–612).

Executive Order 12988

This technical amendment has been reviewed under E.O. 12988, Civil Justice Reform, and is not intended to have retroactive effect. This technical amendment will not pre-empt State or local laws, regulations, or policies unless they present an irreconcilable conflict with this rule. There are no administrative procedures that must be exhausted prior to any judicial challenge to the provisions of this technical amendment.

Paperwork Reduction Act

In accordance with the Paperwork Reduction Act of 1995 (44 U.S.C. 3501–3520), the information collection or recordkeeping requirements included in this technical amendment have been approved by the Office of Management and Budget (OMB) under OMB control number 0580–0018.

GPEA Compliance

GIPSA is committed to compliance with the Government Paperwork Elimination Act (GPEA), which requires Government agencies, in general, to provide the public option of submitting information or transacting business electronically to the maximum extent possible.

List of Subjects

9 CFR Part 201

Confidential business information, Reporting and recordkeeping requirements, Stockyards, Surety bonds, Trade practices.

9 CFR Part 203

Reporting and recordkeeping requirements, Stockyards.

■ For the reasons set forth above, GIPSA amends 9 CFR Parts 201 and 203 as follows:

PART 201—REGULATIONS UNDER THE PACKERS AND STOCKYARDS ACT

■ 1. The authority citation for part 201 continues to read as follows:

Authority: 7 U.S.C. 222 and 228; 7 CFR 2.22 and 2.81.

§§ 201.10, 201.17, 201.27, 201.28, 201.34, 201.42, 201.43, 201.44, 201.45, 201.56, 201.61, 201.73–1, 201.86, 201.94, 201.95, 201.97, 201.99, 201.100, and 201.200 [Amended]

■ 2. Amend §§ 201.10, 201.17, 201.27, 201.28, 201.34, 201.42, 201.43, 201.44, 201.45, 201.56, 201.61, 201.73–1, 201.86, 201.94, 201.95, 201.97, 201.99, 201.100, and 201.200 by revising the OMB control number citation to read as follows:

''(Approved by the Office of Management and Budget under control number 0580–0015)''

§ 201.108–1 [Amended]

■ 3. Amend § 201.108–1 by adding at the end of the section the following:

''(Approved by the Office of Management and Budget under control number 0580–0015)''

PART 203—STATEMENTS OF GENERAL POLICY UNDER THE PACKERS AND STOCKYARDS ACT

■ 4. Revise the authority citation for part 203 to read as follows:

Authority: 7 CFR 2.22 and 2.81.

§§ 203.4, 203.14, 203.15, 203.16, 203.17, 203.18, and 203.19 [Amended]

■ 5. Amend §§ 203.4, 203.14, 203.15, 203.16, 203.17, 203.18, and 203.19 by revising the OMB control number citation to read as follows:

''(Approved by the Office of Management and Budget under control number 0580–0015)''

JoAnn Waterfield,

Acting Administrator, Grain Inspection, Packers and Stockyards Administration.

[FR Doc. 03–32167 Filed 12–30–03; 8:45 am]

BILLING CODE 3410–EN–P

NUCLEAR REGULATORY COMMISSION

10 CFR Parts 1, 4, 19, 35, 39, 40, and 50

RIN 3150–AH34

Minor Correction Amendments

AGENCY: Nuclear Regulatory Commission.

ACTION: Final rule.

SUMMARY: The Nuclear Regulatory Commission (NRC) is amending its regulations to correct several miscellaneous errors in the Code of Federal Regulations (CFR). This document is necessary to inform the public of these corrective changes to NRC regulations.

EFFECTIVE DATE: December 31, 2003.

FOR FURTHER INFORMATION CONTACT: Alzonia Shepard, Office of Administration, U.S. Nuclear Regulatory Commission, Washington, DC 20555–0001, telephone (301) 415–6864.

SUPPLEMENTARY INFORMATION:

Background

The Nuclear Regulatory Commission is amending the regulations in 10 CFR parts 1, 4, 19, 35, 39, 40, and 50 to correct several miscellaneous errors in regulatory text. These changes in CFR text occurred in the process of preparing and printing of rulemaking documents. The corrections include changing the Zip+4 for Region IV in § 1.5; changing the name of the ''Licensing Support System Advisory Review Panel (LSSARP)'' to the ''Licensing Support Network Advisory Review Panel (LSNARP)'' in § 1.19; correcting the reference ''20 U.S.C. 7801'' to ''20 U.S.C. 8801'' in § 4.4(g)(2)(ii); correcting the misspelled word ''covenant'' in § 4.21(b); substituting ''Title VI'' for ''Title VII'' in § 19.32; changing the word ''Megabecquerels'' to ''megabecquerels'' in § 35.40(a); changing the word ''Gigabecquerels'' to ''gigabecquerels'' in §§ 35.390, 392, and 394; correcting the conversion from ''MBq'' to ''GBq'' in § 39.55(b); changing the reference from paragraphs (d)(4), (f) and (g) to paragraphs (d)(4), (g) and (h) in § 40.42(l) and correcting the ASTME code title in Appendix H to part 50.

Because these amendments constitute minor administrative corrections to the regulations, the notice and comment provisions of the Administrative Procedure Act do not apply pursuant to 5 U.S.C. 553(b)(B). The amendment is effective upon publication in the **Federal Register**. Good cause exists under 5 U.S.C. 553(d) to dispense with the usual 30-day delay in the effective date of the final rule, because the amendments are of a minor and administrative nature dealing with corrections to certain CFR sections, which do not require action by any person or entity regulated by the NRC. Nor does the final rule change the substantive responsibilities of any person or entity regulated by the NRC.

Environmental Impact: Categorical Exclusion

The NRC has determined that this final rule is the type of action described in categorical exclusion 10 CFR 51.22(c)(2). Therefore, neither an environmental impact statement nor an environmental assessment has been prepared for this final rule.

Paperwork Reduction Act Statement

This final rule does not contain new or amended information collection requirements subject to the Paperwork Reduction Act of 1995 (44 U.S.C. 3501 *et seq.*). Existing requirements were approved by the Office of Management and Budget, approval numbers 3150–0053; 3150–0044; 3150–0010; 3150–0130; 3150–0020; and 3150–0011.

Public Protection Notification

The NRC may not conduct or sponsor, and a person is not required to respond to, a request for information of an information collection requirement unless the requesting document displays a currently valid OMB control number.

List of Subjects

10 CFR Part 1

Organization and functions (Government agencies).

10 CFR Part 4

Administrative practice and procedure, Blind, Buildings, Civil rights, Employment, Equal employment opportunity, Federal aid programs, Grant programs, Handicapped, Loan programs, Reporting and recordkeeping requirements, Sex discrimination.

10 CFR Part 19

Criminal penalties, Environmental protection, Nuclear materials, Nuclear power plants and reactors, Occupational safety and health, Radiation protection, Reporting and recordkeeping requirements, Sex discrimination.

10 CFR Part 35

Byproduct material, Criminal penalties, Drugs, Health facilities, Health professions, Medical devices, Nuclear materials, Occupational safety and health, Radiation protection,

Reporting and recordkeeping requirements.

10 CFR Part 39

Byproduct material, Criminal penalties, Nuclear material, Oil and gas exploration—well logging, Reporting and recordkeeping requirements, Scientific equipment, Security measures, Source material, Special nuclear material.

10 CFR Part 40

Criminal penalties, Government contracts, Hazardous materials transportation, Nuclear materials, Reporting and recordkeeping requirements, Source material, Uranium.

10 CFR Part 50

Antitrust, Classified information, Criminal penalties, Fire protection, Intergovernmental relations, Nuclear power plants and reactors, Radiation protection, Reactor siting criteria, Reporting and recordkeeping requirements.

■ For the reasons set forth in the preamble and under the authority of the Atomic Energy Act of 1954, as amended; the Energy Reorganization Act of 1974, as amended; and 5 U.S.C. 552 and 553, the NRC is adopting the following amendments to 10 CFR parts 1, 4, 19, 35, 39, 40, and 50.

PART 1—STATEMENT OF ORGANIZATION AND GENERAL INFORMATION

■ 1. The authority citation for Part 1 continues to read as follows:

Authority: Secs. 23, 161, 68 Stat. 925, 948, as amended (42 U.S.C. 2033, 2201); sec. 29, Pub. L. 85–256, 71 Stat. 579, Pub. L. 95–209, 91 Stat. 1483 (42 U.S.C. 2039); sec. 191, Pub. L. 87–615, 76 Stat. 409 (42 U.S.C. 2241); secs. 201, 203, 204, 205, 209, 88 Stat. 1242, 1244, 1245, 1246, 1248, as amended (42 U.S.C. 5841, 5843, 5844, 5845, 5849); 5 U.S.C 552, 553; Reorganization Plan No. 1 of 1980, 45 FR 40561, June 16, 1980.

■ 2. In § 1.5, paragraph (b) (4) is revised to read as follows:

§ 1.5 Location of principal offices and Regional Offices.

* * * * *

(b) * * *

(4) Region IV, USNRC, 611 Ryan Plaza Drive, Suite 400, Arlington, TX 76011–4005.

■ 3. In § 1.19, paragraph (d) is revised to read as follows:

§ 1.19 Other committees, boards, and panels.

* * * * *

(d) The Licensing Support Network Advisory Review Panel (LSNARP) was established by the Commission on October 3, 1989, pursuant to 10 CFR 2.1011(e) of the Commission's regulations. The LSNARP provides advice to the Commission on the design, development, and operation of the Licensing Support Network (LSN) an electronic information management system for use in the Commission's high-level radioactive waste (HLW) licensing proceeding. Membership consists of those interests that will be affected by the use of the LSN, and selected Federal agencies with expertise in large-scale electronic information systems. The individual representatives of these interests and agencies possess expertise in management information science and in managing records of the Commission's licensing process for the HLW repository.

PART 4—NONDISCRIMINATION IN FEDERALLY ASSISTED COMMISSION PROGRAMS

■ 4. The authority citation for Part 4 continues to read as follows:

Authority: Secs. 161, 68 Stat. 948, as amended (42 U.S.C. 2201); sec. 274, 73 Stat. 688, as amended (42 U.S.C. 2021); sec. 201, 88 Stat. 1242, as amended (42 U.S.C. 5841).

Subpart A also issued under secs. 602–605, Pub. L. 88–352, 78 Stat. 252, 253 (42 U.S.C. 2000d–2000d–7); sec. 401, 88 Stat. 1254 (42 U.S.C. 5891).

■ 5. In § 4.4, paragraph (g)(2)(ii) is revised to read as follows:

§ 4.4 Definitions.

* * * * *

(g) * * *

(2) * * *

(ii) A local educational agency (as defined in 20 U.S.C. 8801), system of vocational education, or other school system;

* * * * *

■ 6. In § 4.21, the third sentence in paragraph (b) is revised to read as follows:

§ 4.21 General requirements.

* * * * *

(b) * * * Where the property is obtained from the Federal Government, such covenant may also include a condition coupled with a right to be reserved by the NRC to revert title to the property in the event of a breach of the covenant where, in the discretion of the NRC, such a condition and right of reverter is appropriate to the program and to the nature of the grant and the grantee. * * *

* * * * *

PART 19—NOTICES, INSTRUCTIONS, AND REPORTS TO WORKERS; INSPECTION AND INVESTIGATION

■ 7. The authority citation for Part 19 continues to read as follows:

Authority: Secs. 53, 63, 81, 103, 104, 161, 186, 68 Stat. 930, 933, 935, 936, 937, 948, 955, as amended, sec. 234, 83 Stat. 444, as amended, sec. 1701, 106 Stat. 2951, 2952, 2953 (42 U.S.C. 2073, 2093, 2111, 2133, 2134, 2201, 2236, 2282 2297f); sec. 201, 88 Stat. 1242, as amended (42 U.S.C. 5841); Pub. L. 95–601, sec. 10, 92 Stat. 2951 (42 U.S.C. 5851).

■ 8. Section 19.32 is revised to read as follows:

§ 19.32 Discrimination prohibited.

No person shall on the ground of sex be excluded from participation in, be denied the benefit of, or be subjected to discrimination under any program or activity licensed by the Nuclear Regulatory Commission. This provision will be enforced through agency provisions and rules similar to those already established, with respect to racial and other discrimination, under Title VI of the Civil Rights Act of 1964. This remedy is not exclusive, however, and will not prejudice or cut off any other legal remedies available to a discriminatee.

PART 35—MEDICAL USE OF BYPRODUCT MATERIAL

■ 9. The authority citation for Part 35 continues to read as follows:

Authority: Secs. 81, 161, 182, 183, 68 Stat. 935, 948, 953, 954, as amended (42 U.S.C. 2111, 2201, 2232, 2233); sec. 201, 88 Stat. 1242, as amended (42 U.S.C. 5841).

§ 35.40 [Amended]

■ 10. In § 35.40, paragraph (a), change the term ''Megabecquerels'' to ''megabecquerels.''

§ 35.390 [Amended]

■ 11. In § 35.390, paragraphs (b)(1)(ii)(G)(*1*) and (*2*), change the word ''Gigabecquerels'' to ''gigabecquerels.''

§ 35.392 [Amended]

■ 12. In § 35.392, in the introductory paragraph and paragraph (c)(2)(vi), change the term ''Gigabecquerels'' to ''gigabecquerels.''

§ 35.394 [Amended]

■ 13. In § 35.394, in the introductory paragraph and paragraph (c)(2)(vi), change the term ''Gigabecquerels'' to ''gigabecquerels.''

PART 39—LICENSES AND RADIATION SAFETY REQUIREMENTS FOR WELL LOGGING

■ 14. The authority citation for Part 39 continues to read as follows:

Authority: Secs. 53, 57, 62, 63, 65, 69, 81, 82, 161, 182, 183, 186, 68 Stat. 929, 930, 932, 933, 934, 935, 948, 953, 954, 955, as amended, sec. 234, 83 Stat. 444, as amended (42 U.S.C. 2073, 2077, 2092, 2093, 2095, 2099, 2111, 2112, 2201, 2232, 2233, 2236, 2282); secs. 201, as amended, 202, 206, 88 Stat. 1242, as amended, 1244, 1246 (42 U.S.C. 5841, 5842, 5846).

■ 15. Section 39.55 is revised to read as follows:

§ 39.55 Tritium neutron generator target sources.

(a) Use of a tritium neutron generator target source, containing quantities not exceeding 1,110 GBg [30 curies] and in a well with a surface casing to protect fresh water aquifers, is subject to the requirements of this part except §§ 39.15, 39.41, and 39.77.

(b) Use of a tritium neutron generator target source, containing quantities exceeding 1,110 GBg [30 curies] or in a well without a surface casing to protect fresh water aquifers, is subject to the requirements of this part except § 39.41.

PART 40—DOMESTIC LICENSING OF SOURCE MATERIAL

■ 16. The authority citation for Part 40 continues to read as follows:

Authority: Secs. 62, 63, 64, 65, 81, 161, 182, 183, 186, 68 Stat. 932, 933, 935, 948, 953, 954, 955, as amended, secs. 11e(2), 83, 84, Pub. L. 95–604, 92 Stat. 3033, as amended, 3039, sec. 234, 83 Stat. 444, as amended (42 U.S.C. 2014(e)(2), 2092, 2093, 2094, 2095, 2111, 2113, 2114, 2201, 2232, 2233, 2236, 2282); sec. 274, Pub. L. 86–373, 73 Stat. 688 (42 U.S.C. 2021); secs. 201, as amended, 202, 206, 88 Stat. 1242, as amended, 1244, 1246 (42 U.S.C. 5841, 5842, 5846); sec. 275, 92 Stat. 3021, as amended by Pub. L. 97–415, 96 Stat. 2067 (42 U.S.C. 2022); sec. 193, 104 Stat. 2835, as amended by Pub. L. 104–134, 110 Stat. 1321, 1321–349 (42 U.S.C. 2243).

Section 40.7 also issued under Pub. L. 95–601, sec. 10, 92 Stat. 2951 (42 U.S.C. 5851). Section 40.31(g) also issued under sec. 122, 68 Stat. 939 (42 U.S.C. 2152). Section 40.46 also issued under sec. 184, 68 Stat. 954, as amended (42 U.S.C. 2234). Section 40.71 also issued under sec. 187, 68 Stat. 955 (42 U.S.C. 2237).

■ 17. In § 40.42, paragraph (l) is revised to read as follows:

§ 40.42 Expiration and termination of licenses and decommissioning of sites and separate buildings or outdoor areas.

* * * * *

(l) Specific licenses for uranium and thorium milling are exempt from paragraphs (d)(4), (g) and (h) of this section with respect to reclamation of tailings impoundments and/or waste disposal areas.

PART 50—DOMESTIC LICENSING OF PRODUCTION AND UTILIZATION FACILITIES

■ 18. The authority citation for Part 50 continues to read as follows:

Authority: Secs. 102, 103, 104, 105, 161, 182, 183, 186, 189, 68 Stat. 936, 937, 938, 948, 953, 954, 955, 956, as amended, sec. 234, 83 Stat. 444, as amended (42 U.S.C. 2132, 2133, 2134, 2135, 2201, 2232, 2233, 2236, 2239, 2282); secs. 201, as amended, 202, 206, 88 Stat. 1242, as amended, 1244, 1246 (42 U.S.C. 5841, 5842, 5846).

Section 50.7 also issued under Pub. L. 95–601, sec. 10, 92 Stat. 2951 (42 U.S.C. 5841). Section 50.10 also issued under secs. 101, 185, 68 Stat. 955, as amended (42 U.S.C. 2131, 2235); sec. 102, Pub. L. 91–190, 83 Stat. 853 (42 U.S.C. 4332). Sections 50.13, 50.54(D.D.), and 50.103 also issued under sec. 108, 68 Stat. 939, as amended (42 U.S.C. 2138). Sections 50.23, 50.35, 50.55, and 50.56 also issued under sec. 185, 68 Stat. 955 (42 U.S.C. 2235). Sections 50.33a, 50.55a and Appendix Q also issued under sec. 102, Pub. L. 91–190, 83 Stat. 853 (42 U.S.C. 4332). Sections 50.34 and 50.54 also issued under sec. 204, 88 Stat. 1245 (42 U.S.C. 5844). Sections 50.58, 50.91, and 50.92 also issued under Pub. L. 97–415, 96 Stat. 2073 (42 U.S.C. 2239). Section 50.78 also issued under sec. 122, 68 Stat. 939 (42 U.S.C. 2152). Sections 50.80–50.81 also issued under sec. 184, 68 Stat. 954, as amended (42 U.S.C. 2234). Appendix F also issued under sec. 187, 68 Stat. 955 (42 U.S.C. 2237).

■ 19. In Appendix H to Part 50, in the Introduction, the first sentence of the second paragraph is revised to read as follows:

Appendix H to Part 50—Reactor Vessel Material Surveillance Requirements

I. Introduction

* * * * *

ASTM E 185–73, ''Standard Recommended Practice for Surveillance Tests for Nuclear Reactor Vessels''; ASTM E 185–79, ''Standard Practice for Conducting Surveillance Tests for Light-Water Cooled Nuclear Power Reactor Vessels''; and ASTM E 185–82, ''Standard Practice for Conducting Surveillance Tests for Light-Water Cooled Nuclear Power Reactor Vessels''; which are referenced in the following paragraphs, have been approved for incorporation by reference by the Director of the Federal Register. * * *

* * * * *

Dated at Rockville, Maryland this 22nd day of December, 2003.

For the Nuclear Regulatory Commission.

Michael T. Lesar,

Division of Administrative Services, Office of Administration.

[FR Doc. 03–31952 Filed 12–30–03; 8:45 am]

BILLING CODE 7590–01–P

DEPARTMENT OF TRANSPORTATION

Federal Aviation Administration

14 CFR Parts 23 and 33

[Docket No. FAA–1998–4815; Amendment No. 23–54 and 33–20]

RIN 2120–AF84

Airworthiness Standards; Bird Ingestion; Correction

AGENCY: Federal Aviation Administration, Transportation.

ACTION: Correcting amendments.

SUMMARY: This document contains corrections to the final regulations for bird ingestion type certification standards that the Federal Aviation Administration (FAA) published in the **Federal Register** on September 14, 2000 (65 FR 55848), with an effective date of December 13, 2000. These regulations revised the bird ingestion type certification standards for aircraft turbine engines.

DATES: Effective on January 1, 2004.

FOR FURTHER INFORMATION CONTACT: Marc Bouthillier, Engine and Propeller Standards Staff, ANE–110, Engine and Propeller Directorate, Aircraft Certification Service, Federal Aviation Administration (FAA), New England Region, 12 New England Executive Park, Burlington, Massachusetts 01803–5299; telephone (781) 238–7114; fax (781) 238–7199; electronic mail: *Marc.bouthillier@faa.gov.*

SUPPLEMENTARY INFORMATION:

Background

The final regulations that are the subject of these corrections, revised the bird ingestion type certification standards for aircraft turbine engines to better address the actual bird threat encountered in service, and established nearly uniform bird ingestion standards for aircraft turbine engines certified by the United States under FAA standards and by the Joint Aviation Authorities (JAA) countries under JAA standards, thereby simplifying airworthiness approvals for import and export.

Need for Correction

As published, the final regulations contain errors that may prove to be misleading and need to be clarified.

List of Subjects

14 CFR Part 23

Air transportation, Aircraft, Aviation safety, Safety.

14 CFR Part 33

Air transportation, Aircraft, Aviation safety, Safety.

■ Accordingly, 14 CFR parts 23 and 33 is corrected by making the following correcting amendments:

PART 23—AIRWORTHINESS STANDARDS: NORMAL, UTILITY, ACROBATIC, AND COMMUTER CATEGORY AIRPLANES

■ 1. The authority citation for part 23 continues to read as follows:

Authority: 49 U.S.C. 106(g), 40113, 44701, 44702, 44704.

■ 2. Correct paragraph (a)(2)(i) of § 23.903 to read as follows:

§ 23.903 [Corrected]

(a) In paragraph (a)(2)(i), the sentence should read ''Sections 33.76, 33.77 and 33.78 of this chapter in effect on December 13, 2000, or as subsequently amended; or''.

PART 33—AIRWORTHINESS STANDARDS; AIRCRAFT ENGINES

■ 3. The authority citation for part 33 continues to read as follows:

Authority: 49 U.S.C. 106(g), 40113, 44701, 44702, 44704.

■ 4. Correct paragraphs (b)(1), (c)(1), (c)(7)(ii), (c)(7)(iii), (c)(7)(viii), (c)(7)(i)(x), (c)(8)(v), (c)(8)(v)(i), Table 1 and Table 2 of § 33.76 to read as follows:

§ 33.76 [Corrected]

1. In § 33.76, paragraph (b)(1), in two instances in this sentence, remove the word ''rotocraft'' and add in its place the word ''rotorcraft''.

2. In § 33.76, in paragraph (c)(1), in the second sentence, remove the word ''affects'' and add in its place the word ''effects'' and remove the word ''roto'' and add in its place the word ''rotor''.

3. In § 33.76, in paragraph (c)(7)(ii), remove the word ''level'' and add in its place the word ''lever''.

4. In § 33.76, in paragraph (c)(7)(iii), remove the figure ''175-percent'' and add in its place the figure ''75-percent''.

5. In § 33.76, in paragraph (c)(7)(viii), remove the sentence ''The durations specified are times at the defined conditions with the power lever being moved between each condition in less than 10 seconds.''

6. In § 33.76, in paragraph (c)(7), add a new paragraph (c)(7)(ix) to read as follows:

* * * * *

(c) * * *

(7) * * *

(ix) The durations specified are times at the defined conditions with the power being changed between each condition in less than 10 seconds.

* * * * *

7. In § 33.76, in paragraph (c)(8)(v), remove the sentence ''The duration specified are times at the defined conditions with the power being changed between each condition in less than 10 seconds.''

8. In § 33.76, in paragraph (c)(8), add a new paragraph (c)(8)(vi) to read as follows:

* * * * *

(c) * * *

(8) * * *

(vi) The durations specified are times at the defined conditions with the power being changed between each condition in less than 10 seconds.

* * * * *

9. In § 33.76, in Table 1, in the first column heading, remove the words ''Square/meters'' and add in their place the words ''Square-meters''.

10. In § 33.76, in Table 1, in the first column, second row, remove the figure ''(2,029) and add in its place ''(2,092)''.

11. In § 33.76, in Table 2, in the first column, second row, remove the figure ''.05'' and add in its place ''0.05''.

12. In § 33.76, in Table 2, in the third column, tenth row, remove the figure ''(2,53)'' and add in its place ''(2.53)''.

Issued in Burlington, Massachusetts, on December 18, 2003.

Peter A. White,

Acting Manager, Engine and Propeller Directorate, Aircraft Certification Service.

[FR Doc. 03–32085 Filed 12–30–03; 8:45 am]

BILLING CODE 4910–13–M

DEPARTMENT OF TRANSPORTATION

Federal Aviation Administration

14 CFR Part 39

[Docket No. 2003–CE–31–AD; Amendment 39–13403; AD 2003–26–06]

RIN 2120–AA64

Airworthiness Directives; Anjou Aeronautique Safety Belts and Restraint Systems

AGENCY: Federal Aviation Administration (FAA), DOT.

ACTION: Final rule.

SUMMARY: The FAA adopts a new airworthiness directive (AD) for certain Anjou Aeronautique (ANJOU) (formerly TRW Repa S.A., formerly L'AIGLON) safety belts and restraint systems that are installed in aircraft. This AD requires you to inspect safety belts and restraint systems for defects and service life limits, and, if necessary, repair safety belts and restraint systems that have not reached service life limits; and replace safety belts and restraint systems that have reached service life limits. This AD is the result of reports of inadvertent unbuckling of the ANJOU seat belts and two safety recommendations to take AD action. We are issuing this AD to detect and correct defective safety belts and restraint systems, which could result in failure of the safety belts and restraint systems. This failure could lead to lack of occupant restraint during normal or crash loads.

DATES: This AD becomes effective on February 17, 2004.

The Director of the Federal Register approved the incorporation by reference of certain publications listed in the regulation as of February 17, 2004.

ADDRESSES: You may get the service information identified in this AD from Anjou Aeronautique, 13 Avenue De L'Osier, 49125 Tierce, France; telephone: 33 0 2 41 42 88 92; facsimile: 33 0 2 41 42 15 77.

You may view the AD docket at FAA, Central Region, Office of the Regional Counsel, Attention: Rules Docket No. 2003–CE–31–AD, 901 Locust, Room 506, Kansas City, Missouri 64106. Office hours are 8 a.m. to 4 p.m., Monday through Friday, except Federal holidays.

FOR FURTHER INFORMATION CONTACT: Karl Schletzbaum, Aerospace Engineer, FAA, Small Airplane Directorate, 901 Locust, Room 301, Kansas City, Missouri 64106; telephone: (816) 329–4146; facsimile: (816) 329–4090.

SUPPLEMENTARY INFORMATION:

Discussion

What Events Have Caused This AD?

The FAA issued Special Airworthiness Information Bulletin (SAIB) Number CE–02–44, dated September 4, 2002, for SOCATA—Groupe AEROSPATIALE (SOCATA) Model TBM 700 airplanes, concerning ANJOU seat belts. At that time, FAA did not make a determination of an unsafe condition and take AD action.

Later, FAA issued SAIB Number CE–03–06, dated November 7, 2002, for SOCATA Rallye 150T, Rallye 150ST, Rallye 235E, and Rallye 235C airplanes, concerning ANJOU seat belts. Again, FAA then did not make a determination of an unsafe condition and take AD action.

We continued to receive field reports of inadvertent unbuckling of the ANJOU seat belts. The FAA received two safety recommendations to take AD action (NPRM) to propose to require replacement of certain safety belts and restraint systems.

In light of the field reports and safety recommendations, we issued a proposal to amend part 39 of the Federal Aviation Regulations (14 CFR part 39) to include an AD that would apply to all SOCATA Models TB 9, TB 10, TB 20, TB 21, TB 200, TMB 700, Rallye 100S, Rallye 150T, Rallye 150ST, Rallye 235E, and Rallye 235C airplanes. This proposal was published in the **Federal Register** as a notice of proposed rulemaking (NPRM) on March 7, 2003 (68 FR 11015). The NPRM proposed to require you to replace certain safety belts and restraint systems.

Comments received on the NPRM suggest that FAA withdraw the proposal and that FAA consider issuing a new NPRM to propose that you:

—inspect certain ANJOU safety belts and restraint systems that are installed in airplanes for defects and service life limits;

—repair defective safety belts and restraint systems that have not reached service life limits; and

—replace safety belts and restraint systems that have reached service life limits.

We agree, and therefore, are withdrawing that NPRM.

What Is the Potential Impact if FAA Took No Action?

These defective safety belts and restraint systems could result in failure of the safety belts and restraint systems. This failure could lead to lack of occupant restraint during normal or crash loads.

Has FAA Taken Any Action to This Point?

We issued a proposal to amend part 39 of the Federal Aviation Regulations (14 CFR part 39) to include an AD that would apply to certain ANJOU (formerly TRW Repa S.A., formerly L'AIGLON) safety belts and restraint systems that are installed in aircraft. This proposal was published in the **Federal Register** as a notice of proposed rulemaking (NPRM) on September 2, 2003 (68 FR 52145). The NPRM proposed to inspect safety belts and restraint systems for defects and service life limits, and, if necessary, repair safety belts and restraint systems that have not reached service life limits; and replace safety belts and restraint systems that have reached service life limits.

Comments

Was the Public Invited To Comment?

We gave the public the opportunity to participate in the development of this AD. We received no comments on the proposal or on the determination of the cost to the public.

Conclusion

What Is FAA's Final Determination on This Issue?

We have carefully reviewed the available data and determined that air safety and the public interest require adopting the AD as proposed except for minor editorial corrections. We have determined that these minor corrections:

—provide the intent that was proposed in the NPRM for correcting the unsafe condition; and

—do not add any additional burden upon the public than was already proposed in the NPRM.

Changes to 14 CFR Part 39—Effect on the AD

How Does the Revision to 14 CFR Part 39 Affect This AD?

On July 10, 2002, the FAA published a new version of 14 CFR part 39 (67 FR 47997, July 22, 2002), which governs the FAA's AD system. This regulation now includes material that relates to altered products, special flight permits, and alternative methods of compliance. This material previously was included in each individual AD. Since this material is included in 14 CFR part 39, we will not include it in future AD actions.

Costs of Compliance

How Many Airplanes Does This AD Impact?

We estimate that this AD affects 617 aircraft in the U.S. registry that could have the affected ANJOU safety belts and restraint systems installed. Some aircraft have more than one unit installed.

What Is the Cost Impact of This AD on Owners/Operators of the Affected Airplanes?

We estimate the following costs to accomplish the inspection and repair:

Labor cost	Parts cost	Total cost per 6 safety belts and restraint systems
1 workhour per 6 safety belts and restraint systems × $65 per hour = $65	No cost	$65

The applicable service information identifies that replacement parts are available free of charge. For replacement of a safety belt assembly, the parts cost is approximately $150 per seat belt assembly. The number of installed safety belts and restraint systems may vary by individual aircraft configuration. Therefore, we have no way of determining the replacement cost for this AD.

Compliance Time of This AD

What Is the Compliance Time of This AD?

The compliance time of this AD is within 50 hours time-in-service (TIS) or 4 calendar months after the effective date of this AD, whichever occurs first.

Why Is the Compliance Time of This AD Presented in Both Hours TIS and Calendar Time?

Defective safety belts and restraint systems are a direct result of use of the safety belts and restraint systems. However, defective safety belts and restraint systems are not necessarily a result of repetitive airplane operation. For example, defective safety belts and restraint systems could occur on an affected airplane within a short period of airplane operation while you could operate another affected airplane for a considerable amount of time without experiencing defective safety belts and restraint systems. Therefore, to assure that any defective safety belt and restraint system is detected and corrected in a timely manner without inadvertently grounding any of the affected airplanes, we are using a compliance time based upon both hours TIS and calendar time.

Regulatory Findings

Will This AD Impact Various Entities?

We have determined that this AD will not have federalism implications under Executive Order 13132. This AD will not have a substantial direct effect on the States, on the relationship between the national government and the States, or on the distribution of power and responsibilities among the various levels of government.

Will This AD Involve a Significant Rule or Regulatory Action?

For the reasons discussed above, I certify that this AD:

1. Is not a ''significant regulatory action'' under Executive Order 12866;

2. Is not a ''significant rule'' under the DOT Regulatory Policies and Procedures (44 FR 11034, February 26, 1979); and

3. Will not have a significant economic impact, positive or negative, on a substantial number of small entities under the criteria of the Regulatory Flexibility Act.

We prepared a summary of the costs to comply with this AD and placed it in the AD Docket. You may get a copy of this summary by sending a request to us at the address listed under **ADDRESSES.** Include ''AD Docket No. 2003–CE–31–AD'' in your request.

List of Subjects in 14 CFR Part 39

Air transportation, Aircraft, Aviation safety, Incorporation by reference, Safety.

Adoption of the Amendment

■ Accordingly, under the authority delegated to me by the Administrator, the Federal Aviation Administration amends part 39 of the Federal Aviation Regulations (14 CFR part 39) as follows:

PART 39—AIRWORTHINESS DIRECTIVES

■ 1. The authority citation for part 39 continues to read as follows:

Authority: 49 U.S.C. 106(g), 40113, 44701.

§ 39.13 [Amended]

■ 2. FAA amends § 39.13 by adding a new AD to read as follows:

2003–26–06 Anjou Aeronautique (Formerly TRW REPA S.A., Formerly L'Aiglon): Amendment 39–13403; Docket No. 2003–CE–31–AD.

When Does This AD Become Effective?

(a) This AD becomes effective on February 17, 2004.

What Other ADs Are Affected by This Action?

(b) None.

What Airplanes Are Affected by This AD?

(c) This AD affects Anjou Aeronautique safety belts and restraint systems specified in paragraph (c)(1) that are installed on, but not limited to, the aircraft specified in paragraph (c)(2) that are certificated in any category:

(1) *Anjou Aeronautique safety belts and restraint systems:* Part Numbers/Types 343, 343–1, 343AM, 343B, 343BM, 343C, 343CM, 343D, and 343M.

(2) *Affected aircraft:* The following is a list of aircraft that may incorporate the affected Anjou Aeronautique safety belts and restraint systems:

(i) EUROCOPTER FRANCE Models AS332C, AS332L, AS332L1, AS332L2, and AS350B2 helicopters; and

(ii) SOCATA—Groupe AEROSPATIALE TB 9, TB 10, TB 20, TB 21, TB 200, TMB 700, Rallye 100S, Rallye 150T, Rallye 150ST, Rallye 235E, and Rallye 235C airplanes.

What Is the Unsafe Condition Presented in This AD?

(d) This AD is the result of reports of inadvertent unbuckling of the ANJOU seat belts and two safety recommendations to take AD action. The actions specified in this AD are intended to detect and correct defective safety belts and restraint systems, which could result in failure of the safety belts and restraint systems. This failure could lead to lack of occupant restraint during normal or crash loads.

What Must I Do To Address This Problem?

(e) To address this problem, you must accomplish the following:

Actions	Compliance	Procedures
(1) Inspect the installed Anjou Aeronautique/ TRW Repa S.A./L'Aiglon safety belts and restraint systems (types 343, 343–1, 343AM, 343B, 343BM, 343C, 343CM, 343D, or 343M) for: (i) defective buckle latch; and (ii) exceeded service life.	Within the next 50 hours time-in-service (TIS) after February 17, 2004 (the effective date of this AD) or 4 calendar months after February 17, 2004 (the effective date of this AD), whichever occurs first, unless already accomplished. Repetitively inspect thereafter at every 12 calendar months until the affected safety belt and restraint system is replaced as specified by paragraph (e)(3) of this AD.	*For types 343, 343AM, 343B, 343BM, 343C, 343CM, 343D, or 343M:* Follow Anjou Aeronautique Service Bulletin No. No. 343–25–02, Issue 1, dated October 23, 2001. *For type 343–1:* Follow Anjou Aeronautique Service Bulletin No. 343–1–25–01, Issue 1, dated October 23, 2001.
(2) If any defective buckle latch or safety belt and restraint system with exceeded service life is found during any inspection required by paragraph (e)(1) of this AD: (i) For any defective buckle latch, replace defective parts with new parts. (ii) For any safety belt and restraint system that has exceeded its service life, replace with a non-Anjou Aeronautique/TRW Repa S.A./ L'Aiglon FAA-approved safety belt and restraint system. The service life limit for the Anjou Aeronautique/ TRW Repa S.A./L'Aiglon is 60 calendar months after the date of manufacture.	Prior to further flight after any inspection required by paragraph (e)(1) of this AD.	*For types 343, 343AM, 343B, 343BM, 343C, 343CM, 343D, or 343M:* Follow Anjou Aeronautique Service Bulletin No. No. 343–25–02, Issue 1, dated October 23, 2001. *For type 343–1:* Follow Anjou Aeronautique Service Bulletin No. 343–1–25–01, Issue 1, dated October 23, 2001.
(3) Replace any installed Anjou Aeronautique/ TRW Repa S.A./L'Aiglon safety belts and restraint systems (types 343, 343–1, 343AM, 343B, 343BM, 343C, 343CM, 343D, or 343M). Replacement of all safety belts and restraint systems eliminates the need for the repetitive inspections of paragraph (e)(1) of this AD.	Prior to exceeding the service life limit of 60 calendar months after the date of manufacture or 4 calendar months after February 17, 2004 (the effective date of this AD), whichever occurs later.	Not Applicable.

Actions	Compliance	Procedures
(4) Do not install any Anjou Aeronautique/TRW Repa S.A./L'Aiglon types 343, 343–1, 343–1, 343M, 343AM, 343B, 343BM, 343C, 343CM, and 343D safety belts and restraint systems.	As of February 17, 2004 (the effective date of this AD).	Not Applicable.

Note: All inertia-reel type safety belts and restraint systems or fixed rear safety belts and restraint systems from another manufacturer are not affected by this AD.

What About Alternative Methods of Compliance?

(f) You may request a different method of compliance or a different compliance time for this AD by following the procedures in 14 CFR 39.13. Send your request to the Manager, Manager, Standards Office, Small Airplane Directorate, FAA. For information on any already approved alternative methods of compliance, contact Karl Schletzbaum, Aerospace Engineer, FAA, Small Airplane Directorate, 901 Locust, Room 301, Kansas City, Missouri 64106; telephone: (816) 329–4146; facsimile: (816) 329–4090.

Is There Material Incorporated by Reference?

(g) You must do the actions required by this AD per Anjou Aeronautique Service Bulletin No. 343–25–02, Issue 1, dated October 23, 2001, and Anjou Aeronautique Service Bulletin No. 343–1–25–01, Issue 1, dated October 23, 2001. The Director of the Federal Register approved the incorporation by reference of this service bulletin in accordance with 5 U.S.C. 552(a) and 1 CFR part 51. You may get a copy from Anjou Aeronautique, 13 Avenue De L'Osier, 49125 Tierce, France; telephone: 33 0 2 41 42 88 92; facsimile: 33 0 2 41 42 15 77. You may review copies at FAA, Central Region, Office of the Regional Counsel, 901 Locust, Room 506, Kansas City, Missouri 64106; or at the Office of the Federal Register, 800 North Capitol Street, NW, suite 700, Washington, DC.

Issued in Kansas City, Missouri, on December 17, 2003.

Michael Gallagher,

Manager, Small Airplane Directorate, Aircraft Certification Service.

[FR Doc. 03–31666 Filed 12–30–03; 8:45 am]

BILLING CODE 4910–13–P

DEPARTMENT OF TRANSPORTATION

Federal Aviation Administration

14 CFR Part 39

[Docket No. 2003–SW–36–AD; Amendment 39–13401; AD 2003–26–04]

RIN 2120–AA64

Airworthiness Directives; Agusta S.p.A. Model A109E Helicopters

AGENCY: Federal Aviation Administration, DOT.

ACTION: Final rule; request for comments.

SUMMARY: This amendment adopts a new airworthiness directive (AD) for Agusta S.p.A. (Agusta) Model A109E helicopters. This action requires certain inspections of the rod-end of the main rotor head damper for freedom of movement, and depending on the torque required to move the rod-end, either further inspection for a crack or replacing the rod-end. This amendment is prompted by reports of rod-end fractures due to fatigue failure resulting in increased helicopter vibrations. This condition, if not corrected, could result in failure of the rod-end, extreme vibrations, and a subsequent forced landing or loss of control of the helicopter.

DATES: Effective January 15, 2004.

The incorporation by reference of certain publications listed in the regulations is approved by the Director of the Federal Register as of January 15, 2004.

Comments for inclusion in the Rules Docket must be received on or before March 1, 2004.

ADDRESSES: Submit comments in triplicate to the Federal Aviation Administration (FAA), Office of the Regional Counsel, Southwest Region, Attention: Rules Docket No. 2003–SW–36–AD, 2601 Meacham Blvd., Room 663, Fort Worth, Texas 76137. You may also send comments electronically to the Rules Docket at the following address: *9-asw-adcomments@faa.gov.*

The service information referenced in this AD may be obtained from Agusta, 21017 Cascina Costa di Samarate (VA) Italy, Via Giovanni Agusta 520, telephone 39 (0331) 229111, fax 39 (0331) 229605–222595. This information may be examined at the FAA, Office of the Regional Counsel, Southwest Region, 2601 Meacham Blvd., Room 663, Fort Worth, Texas; or at the Office of the Federal Register, 800 North Capitol Street, NW., suite 700, Washington, DC.

FOR FURTHER INFORMATION CONTACT: Richard Monschke, Aviation Safety Engineer, FAA, Rotorcraft Directorate, Rotorcraft Standards Staff, Fort Worth, Texas 76193–0110, telephone (817) 222–5116, fax (817) 222–5961.

SUPPLEMENTARY INFORMATION: The Ente Nazionale per l'Aviazione Civile (ENAC), the airworthiness authority for Italy, notified the FAA that an unsafe condition may exist on Agusta Model A109E helicopters. The ENAC advises that inspections of the rod-end should be carried out as called for by the manufacturer's service information.

Agusta has issued Bollettino Tecnico (BT) No. 109EP–37, dated July 15, 2003; BT No. 109EP–37, Revision A, dated July 30, 2003; and Errata Corrige, dated September 2, 2003; which specify an inspection of each damper rod-end assembly, part number (P/N) Microtecnica 3637GR85, for seizure or a crack. Agusta reports rod-end fractures due to fatigue failure originating from the thread under cut of the rod-end resulting in increased helicopter vibrations. Also, during the first few hours of operation, the rotational torque of the spherical bearing increases generating additional loads on the rod-end. ENAC has classified this BT as mandatory and issued AD Nos. 2003–231, dated July 18, 2003, and 2003–249, dated August 1, 2003, to ensure the continued airworthiness of these helicopters in Italy.

This helicopter model is manufactured in Italy and is type certificated for operation in the United States under the provisions of 14 CFR 21.29 and the applicable bilateral agreement. Pursuant to the applicable bilateral agreement, ENAC has kept the FAA informed of the situation described above. The FAA has examined the findings of ENAC, reviewed all available information, and determined that AD action is necessary for products of this type design that are certificated for operation in the United States.

This unsafe condition is likely to exist or develop on other helicopters of the same type design registered in the United States. Therefore, this AD is being issued to prevent failure of the rod-end, extreme vibration, and a subsequent forced landing or loss of control of the helicopter. This AD requires the following:

- Within 25 hours time-in-service (TIS), inspect the rod-end to determine if it can be rotated by hand.
- If the rod-end can be rotated by hand, no further action is required.
- If the rod-end cannot be rotated by hand, determine the torque value

required to rotate it by use of a torque wrench.

• If the torque value is less than 20 Newton-meter (Nm) (177 in-lb) within 25 hours TIS, inspect the rod-end for a crack by a magnetic particle inspection. If a crack is found, replace the rod-end assembly with an airworthy part before further flight.

• If the torque value is 20 Nm or more, replace the rod-end assembly with an airworthy part before further flight.

The actions must be done using the BT 109EP–37, Revision A, as amended by the Errata Corrige, described previously. The short compliance time involved is required because the previously described critical unsafe condition can adversely affect the controllability of the helicopter. Therefore, within 25 hours TIS, inspecting the rod-end to determine if it can be rotated by hand is required. If the rod-end cannot be rotated by hand, determining the torque value required to rotate the rod end and, if necessary, replacing the rod-end assembly with an airworthy part before further flight are required, and this AD must be issued immediately.

Since a situation exists that requires the immediate adoption of this regulation, it is found that notice and opportunity for prior public comment hereon are impracticable, and that good cause exists for making this amendment effective in less than 30 days.

The FAA estimates that this AD will affect 34 helicopters of U.S. registry, and the required actions will take approximately 3 work hours per helicopter to accomplish at an average labor rate of $65 per work hour. Required parts will cost approximately $450 per helicopter. Based on these figures, we estimate the total cost of the AD on U.S. operators to be $21,930 ($645 per helicopter). However, Agusta states in its BT that it will supply the parts at no cost and will reimburse up to 2.5 work hours for each terminal at a fixed rate of $40. Assuming the warranty coverage, the estimated total cost impact on U.S. operators would be $3,230 ($95 per helicopter).

Comments Invited

Although this action is in the form of a final rule that involves requirements affecting flight safety and, thus, was not preceded by notice and an opportunity for public comment, comments are invited on this rule. Interested persons are invited to comment on this rule by submitting such written data, views, or arguments as they may desire. Communications should identify the Rules Docket number and be submitted in triplicate to the address specified under the caption **ADDRESSES.** All communications received on or before the closing date for comments will be considered, and this rule may be amended in light of the comments received. Factual information that supports the commenter's ideas and suggestions is extremely helpful in evaluating the effectiveness of the AD action and determining whether additional rulemaking action would be needed.

Comments are specifically invited on the overall regulatory, economic, environmental, and energy aspects of the rule that might suggest a need to modify the rule. All comments submitted will be available in the Rules Docket for examination by interested persons. A report that summarizes each FAA-public contact concerned with the substance of this AD will be filed in the Rules Docket.

Commenters wishing the FAA to acknowledge receipt of their mailed comments submitted in response to this rule must submit a self-addressed, stamped postcard on which the following statement is made: ''Comments to Docket No. 2003–SW–36–AD.'' The postcard will be date stamped and returned to the commenter.

The regulations adopted herein will not have a substantial direct effect on the States, on the relationship between the national Government and the States, or on the distribution of power and responsibilities among the various levels of government. Therefore, it is determined that this final rule does not have federalism implications under Executive Order 13132.

The FAA has determined that this regulation is an emergency regulation that must be issued immediately to correct an unsafe condition in aircraft, and that it is not a ''significant regulatory action'' under Executive Order 12866. It has been determined further that this action involves an emergency regulation under DOT Regulatory Policies and Procedures (44 FR 11034, February 26, 1979). If it is determined that this emergency regulation otherwise would be significant under DOT Regulatory Policies and Procedures, a final regulatory evaluation will be prepared and placed in the Rules Docket. A copy of it, if filed, may be obtained from the Rules Docket at the location provided under the caption **ADDRESSES.**

List of Subjects in 14 CFR Part 39

Air transportation, Aircraft, Aviation safety, Incorporation by reference, Safety.

Adoption of the Amendment

■ Accordingly, pursuant to the authority delegated to me by the Administrator, the Federal Aviation Administration amends part 39 of the Federal Aviation Regulations (14 CFR part 39) as follows:

PART 39—AIRWORTHINESS DIRECTIVES

■ 1. The authority citation for part 39 continues to read as follows:

Authority: 49 U.S.C. 106(g), 40113, 44701.

§ 39.13 [Amended]

■ 2. Section 39.13 is amended by adding a new airworthiness directive to read as follows:

2003–26–04 Agusta S.p.A.: Amendment 39–13401. Docket No. 2003–SW–36–AD.

Applicability: Model A109E helicopters, with a main rotor head damper, part number (P/N) 109–0111–06–103, with a rod-end assembly, P/N 3637GR85, with a rod-end, P/N 3637–14, installed, certificated in any category.

Compliance: Required as indicated, unless accomplished previously.

To prevent failure of the rod-end, extreme vibrations, and a subsequent forced landing or loss of control of the helicopter, accomplish the following:

(a) Within 25 hours time-in-service (TIS), inspect by hand the rod-end, P/N 3637–14, for freedom of movement around the spherical bearing, P/N 3637–40.

(1) If the rod-end can be rotated by hand, no further action is required by this AD.

(2) If the rod-end cannot be rotated by hand, by using a torque wrench, determine the torque required to rotate the rod-end around the spherical bearing by following the Compliance Instructions, Part I, paragraph 3.1, of Agusta Bollettino Tecnico No. 109EP–37, Revision A, dated July 30, 2003, as amended by the Errata Corrige, dated September 2, 2003 (BT).

(i) If the torque value is 20 or more Newton-meter (Nm) (177 in-lb), replace the rod-end assembly with an airworthy rod-end assembly containing a rod-end, P/N 3637–14, with the letters ''T'', ''R'', ''RT'', ''TR'', or ''TRR'' after the P/N, by following the Compliance Instructions, paragraphs 3.3.1. through 3.3.3., of the BT, except you are not required to return the removed rod-end assembly to Agusta.

(ii) If the torque value is less than 20 Nm, within the next 25 hours TIS, magnetic particle inspect the rod-end for a crack by following the Compliance Instructions, Part II, of the BT.

(A) If no crack is found, no further action is required by this AD.

(B) If a crack is found, replace the rod-end assembly with an airworthy rod-end assembly containing a rod-end, P/N 3637–14 with the letters ''T'', ''R'', ''RT'', ''TR'', or ''TRR'' after the P/N, by following the Compliance Instructions, paragraphs 3.3.1. through 3.3.3., of the BT, except you are not required to return the removed rod-end assembly to Agusta.

(b) To request a different method of compliance or a different compliance time for this AD, follow the procedures in 14 CFR 39.19. Contact the Safety Management Group, Rotorcraft Directorate, FAA, for information about previously approved alternative methods of compliance.

(c) The inspections and replacement of the rod-end assembly must be done using Agusta Bollettino Tecnico No. 109EP–37, Revision A, dated July 30, 2003, as amended by the Errata Corrige, dated September 2, 2003. This incorporation by reference was approved by the Director of the Federal Register in accordance with 5 U.S.C. 552(a) and 1 CFR part 51. Copies may be obtained from Agusta, 21017 Cascina Costa di Samarate (VA) Italy, Via Giovanni Agusta 520, telephone 39 (0331) 229111, fax 39 (0331) 229605–222595. Copies may be inspected at the FAA, Office of the Regional Counsel, Southwest Region, 2601 Meacham Blvd., Room 663, Fort Worth, Texas; or at the Office of the Federal Register, 800 North Capitol Street, NW., suite 700, Washington, DC.

(d) This amendment becomes effective on January 15, 2004.

Note: The subject of this AD is addressed in Ente Nazionale per l'Aviazione Civile (Italy) AD Nos. 2003–231, dated July 18, 2003, and 2003–249, dated August 1, 2003.

Issued in Fort Worth, Texas, on December 15, 2003.

David A. Downey,

Manager, Rotorcraft Directorate, Aircraft Certification Service.

[FR Doc. 03–31849 Filed 12–30–03; 8:45 am]

BILLING CODE 4910–13–P

DEPARTMENT OF TRANSPORTATION

Federal Aviation Administration

14 CFR Part 39

[Docket No. 2002–NM–103–AD; Amendment 39–13404; AD 2003–26–07]

RIN 2120–AA64

Airworthiness Directives; McDonnell Douglas MD–90–30 Airplanes

AGENCY: Federal Aviation Administration, DOT.

ACTION: Final rule.

SUMMARY: This amendment adopts a new airworthiness directive (AD), applicable to certain McDonnell Douglas Model MD–90–30 airplanes, that requires a one-time general visual inspection of the circuit breakers to determine if discrepant circuit breakers are installed, and corrective action if necessary. This action is necessary to prevent internal overheating and arcing of circuit breakers and airplane wiring due to long-term use and breakdown of internal components of the circuit breakers, which could result in smoke and fire in the flight compartment and main cabin. This action is intended to address the identified unsafe condition.

DATES: Effective February 4, 2004.

The incorporation by reference of certain publications listed in the regulations is approved by the Director of the Federal Register as of February 4, 2004.

ADDRESSES: The service information referenced in this AD may be obtained from Boeing Commercial Aircraft Group, Long Beach Division, 3855 Lakewood Boulevard, Long Beach, California 90846, Attention: Data and Service Management, Dept. C1–L5A (D800–0024). This information may be examined at the Federal Aviation Administration (FAA), Transport Airplane Directorate, Rules Docket, 1601 Lind Avenue, SW., Renton, Washington; or at the FAA, Los Angeles Aircraft Certification Office, 3960 Paramount Boulevard, Lakewood, California; or at the Office of the Federal Register, 800 North Capitol Street, NW., suite 700, Washington, DC.

FOR FURTHER INFORMATION CONTACT: George Mabuni, Aerospace Engineer, Systems and Equipment Branch, ANM–130L, FAA, Los Angeles Aircraft Certification Office, 3960 Paramount Boulevard, Lakewood, California 90712–4137; telephone (562) 627–5341; fax (562) 627–5210.

SUPPLEMENTARY INFORMATION: A proposal to amend part 39 of the Federal Aviation Regulations (14 CFR part 39) to include an airworthiness directive (AD) that is applicable to certain McDonnell Douglas Model MD–90–30 airplanes was published in the **Federal Register** on June 11, 2003 (68 FR 34849). That action proposed to require a one-time general visual inspection of the circuit breakers to determine if discrepant circuit breakers are installed, and corrective action if necessary.

Comments

Interested persons have been afforded an opportunity to participate in the making of this amendment. Due consideration has been given to the single comment received.

Request for Clarification of Applicability

The commenter, an operator, requests clarification of the applicability listed in the proposed AD. The commenter states that it has nine airplanes that are included in the applicability listed in the proposed AD. Because no Wood Electric circuit breakers were installed on its newly delivered airplanes or installed on any airplane during maintenance, those airplanes fall into ''Group 1, Condition 1,'' as listed in Boeing Alert Service Bulletin MD90–24A081, Revision 01, dated March 7, 2003 (which was referenced as the appropriate source of service information for accomplishment of the inspection in the proposed AD). For those airplanes, the alert service bulletin states that no action is required. However, the proposed AD would require those airplanes to be inspected to determine if any Wood Electric circuit breaker is installed even though the commenter knows the circuit breakers are not installed.

The FAA agrees that clarification is necessary. Paragraph (a) of the AD does require that all airplanes listed in the applicability statement of the AD be inspected to verify installation of the discrepant circuit breaker. However, the airplane manufacturer has determined that no Model MD–90–30 airplanes were delivered with the subject discrepant circuit breakers installed. Therefore, instead of accomplishing the inspection provided in paragraph (a) of the AD, we will allow operators to review the airplane maintenance records to determine if any discrepant circuit breaker was installed on the airplane after delivery—if the part number of the circuit breakers can be positively determined from that review. We have revised paragraph (a) of this final rule accordingly.

Conclusion

After careful review of the available data, including the comment noted above, the FAA has determined that air safety and the public interest require the adoption of the rule with the change previously described. The FAA has determined that this change will neither increase the economic burden on any operator nor increase the scope of the AD.

Change to Labor Rate

We have reviewed the figures we have used over the past several years to calculate AD costs to operators. To account for various inflationary costs in the airline industry, we find it necessary to increase the labor rate used in these calculations from $60 per work hour to $65 per work hour. The cost impact information, below, reflects this increase in the specified hourly labor rate.

Cost Impact

There are approximately 126 airplanes of the affected design in the worldwide fleet. The FAA estimates that 21 airplanes of U.S. registry will be affected by this AD, that it will take approximately 20 work hours per airplane to accomplish the required

inspection of the circuit breakers (over 700 installed on each airplane), and that the average labor rate is $65 per work hour. Based on these figures, the cost impact of the AD on U.S. operators is estimated to be $27,300, or $1,300 per airplane.

The cost impact figure discussed above is based on assumptions that no operator has yet accomplished any of the requirements of this AD action, and that no operator would accomplish those actions in the future if this AD were not adopted. The cost impact figures discussed in AD rulemaking actions represent only the time necessary to perform the specific actions actually required by the AD. These figures typically do not include incidental costs, such as the time required to gain access and close up, planning time, or time necessitated by other administrative actions.

Regulatory Impact

The regulations adopted herein will not have a substantial direct effect on the States, on the relationship between the national Government and the States, or on the distribution of power and responsibilities among the various levels of government. Therefore, it is determined that this final rule does not have federalism implications under Executive Order 13132.

For the reasons discussed above, I certify that this action (1) is not a ''significant regulatory action'' under Executive Order 12866; (2) is not a ''significant rule'' under DOT Regulatory Policies and Procedures (44 FR 11034, February 26, 1979); and (3) will not have a significant economic impact, positive or negative, on a substantial number of small entities under the criteria of the Regulatory Flexibility Act. A final evaluation has been prepared for this action and it is contained in the Rules Docket. A copy of it may be obtained from the Rules Docket at the location provided under the caption **ADDRESSES.**

List of Subjects in 14 CFR Part 39

Air transportation, Aircraft, Aviation safety, Incorporation by reference, Safety.

Adoption of the Amendment

■ Accordingly, pursuant to the authority delegated to me by the Administrator, the Federal Aviation Administration amends part 39 of the Federal Aviation Regulations (14 CFR part 39) as follows:

PART 39—AIRWORTHINESS DIRECTIVES

■ 1. The authority citation for part 39 continues to read as follows:

Authority: 49 U.S.C. 106(g), 40113, 44701.

§ 39.13 [Amended]

■ 2. Section 39.13 is amended by adding the following new airworthiness directive:

2003–26–07 McDonnell Douglas: Amendment 39–13404. Docket 2002–NM–103–AD.

Applicability: Model MD–90–30 airplanes, as listed in Boeing Alert Service Bulletin MD90–24A081, Revision 01, dated March 7, 2003; certificated in any category.

Compliance: Required as indicated, unless accomplished previously.

To prevent internal overheating and arcing of circuit breakers and airplane wiring due to long-term use and breakdown of internal components of the circuit breakers, which could result in smoke and fire in the flight compartment and main cabin, accomplish the following:

Inspection and Replacement

(a) Within 18 months after the effective date of this AD: Perform a one-time general visual inspection of the circuit breakers to determine if discrepant circuit breakers are installed (includes circuit breakers manufactured by Wood Electric and Wood Electric Division of Brumfield Potter Corporations, and incorrect circuit breakers installed per Boeing Alert Service Bulletin MD90–24A081, dated February 14, 2002), per Boeing Alert Service Bulletin MD90–24A081, Revision 01, dated March 7, 2003. Instead of performing the one-time inspection, a review of the airplane maintenance records is acceptable if the part number of the discrepant circuit breakers can be positively determined by that review.

Note 1: For the purposes of this AD, a general visual inspection is defined as: ''A visual examination of an interior or exterior area, installation, or assembly to detect obvious damage, failure, or irregularity. This level of inspection is made from within touching distance unless otherwise specified. A mirror may be necessary to enhance visual access to all exposed surfaces in the inspection area. This level of inspection is made under normally available lighting conditions such as daylight, hangar lighting, flashlight, or droplight and may require removal or opening of access panels or doors. Stands, ladders, or platforms may be required to gain proximity to the area being checked.''

(1) If no discrepant circuit breaker is found: No further action is required by this paragraph.

(2) If any discrepant circuit breaker is found: Before further flight, replace the circuit breaker with a new, approved circuit breaker, per the service bulletin.

Part Installation

(b) As of the effective date of this AD, no person shall install a circuit breaker manufactured by Wood Electric Corporation or Wood Electric Division of Potter Brumfield Corporation on any airplane.

Alternative Methods of Compliance

(c) In accordance with 14 CFR 39.19, the Manager, Los Angeles Aircraft Certification Office, FAA, is authorized to approve alternative methods of compliance for this AD.

Incorporation by Reference

(d) Unless otherwise provided in this AD, the actions shall be done in accordance with Boeing Alert Service Bulletin MD90–24A081, Revision 01, dated March 7, 2003. This incorporation by reference was approved by the Director of the Federal Register in accordance with 5 U.S.C. 552(a) and 1 CFR part 51. Copies may be obtained from Boeing Commercial Aircraft Group, Long Beach Division, 3855 Lakewood Boulevard, Long Beach, California 90846, Attention: Data and Service Management, Dept. C1–L5A (D800–0024). Copies may be inspected at the FAA, Transport Airplane Directorate, 1601 Lind Avenue, SW., Renton, Washington; or at the FAA, Los Angeles Aircraft Certification Office, 3960 Paramount Boulevard, Lakewood, California; or at the Office of the Federal Register, 800 North Capitol Street, NW., suite 700, Washington, DC.

Effective Date

(e) This amendment becomes effective on February 4, 2004.

Issued in Renton, Washington, on December 19, 2003.

Ali Bahrami,

Acting Manager, Transport Airplane Directorate, Aircraft Certification Service.

[FR Doc. 03–31851 Filed 12–30–03; 8:45 am]

BILLING CODE 4910–13–P

DEPARTMENT OF TRANSPORTATION

Federal Aviation Administration

14 CFR Part 39

[Docket No. 2000–NM–422–AD; Amendment 39–13405; AD 2003–26–08]

RIN 2120–AA64

Airworthiness Directives; Boeing Model 737–100, –200, –200C, –300, –400, and –500 Series Airplanes

AGENCY: Federal Aviation Administration, DOT.

ACTION: Final rule.

SUMMARY: This amendment adopts a new airworthiness directive (AD), applicable to certain Boeing Model 737–100, –200, –200C, –300, –400, and –500 series airplanes, that requires replacing the existing pressure relief valve on the potable water tank with a new, improved pressure relief valve, which is made of stainless steel and is non-adjustable. For certain airplanes, this AD also requires modification of certain piping to re-locate the pressure relief valve. This action is necessary to prevent rupture of the potable water tank during flight of the airplane, which could result in structural damage to the

airplane and its inability to sustain flight loads. This action is intended to address the identified unsafe condition.

DATES: Effective February 4, 2004.

The incorporation by reference of certain publications listed in the regulations is approved by the Director of the Federal Register as of February 4, 2004.

ADDRESSES: The service information referenced in this AD may be obtained from Boeing Commercial Airplane Group, PO Box 3707, Seattle, Washington 98124–2207. This information may be examined at the Federal Aviation Administration (FAA), Transport Airplane Directorate, 1601 Lind Avenue, SW., Renton, Washington; or at the Office of the Federal Register, 800 North Capitol Street, NW., suite 700, Washington, DC.

FOR FURTHER INFORMATION CONTACT: Don Eiford, Aerospace Engineer, Cabin Safety and Environmental Systems Branch, ANM–150S, FAA, Transport Airplane Directorate, 1601 Lind Avenue, SW., Renton, Washington 98055–4056; telephone (425) 917–6465; fax (425) 917–6590.

SUPPLEMENTARY INFORMATION: A proposal to amend part 39 of the Federal Aviation Regulations (14 CFR part 39) to include an airworthiness directive (AD) that is applicable to certain Boeing Model 737–100, –200, –200C, –300, –400, and –500 series airplanes was published as a supplemental Notice of Proposed Rulemaking in the **Federal Register** on June 23, 2003 (68 FR 37105). That action proposed to require replacing the existing pressure relief valve on the potable water tank with a new, improved pressure relief valve, which is made of stainless steel and is non-adjustable. For certain airplanes, that action also proposed to require modification of certain piping to relocate the pressure relief valve. For certain airplanes, that action proposed to revise the earlier proposed AD by correcting procedures for performing the proposed replacement of the pressure relief valve.

Comments

Interested persons have been afforded an opportunity to participate in the making of this amendment. Due consideration has been given to the comments received.

Agreement With Proposed AD

Two commenters agree with the proposed AD.

Request for Acceptable Method of Compliance

One commenter requests that Revision 1 of Boeing Service Bulletin 737–38A1047, dated September 27, 2001, be approved as an acceptable method of compliance for the terminating action requirements of the proposed AD. The commenter notes that Revision 2 of the service bulletin states that no more work is necessary on airplanes changed per Revision 1.

The FAA agrees. We have determined that the work instructions that depict the piping and fittings adjacent to the new relief valve are slightly different between Revision 2 and Revision 1 of Boeing Service Bulletin 737–38A1047. We acknowledge that the figures are similar enough to each other that an operator would correctly install the new relief valve per either Revision 1 or Revision 2 of the service bulletin. Consequently, we have revised paragraph (d) of the final rule to remove the qualifying phrase, ''With the exception of airplanes specified as 'Group 9' or 'Group 10' in Boeing Service Bulletin 737–38A1047, Revision 2, dated July 18, 2002.'' Such revision of paragraph (d) will permit, for all airplanes, accomplishment of the actions specified in service bulletins issued prior to Revision 2 to be considered as an acceptable means of compliance with paragraph (d) of the final rule. However, Revision 2 was specified in paragraphs (a)(2), (b), and (c) of the proposed AD because it more accurately reflects the airplane installation than previous revisions, and those paragraphs remain unchanged in the final rule.

Conclusion

After careful review of the available data, including the comments noted above, the FAA has determined that air safety and the public interest require the adoption of the rule with the change previously described. The FAA has determined that this change will neither increase the economic burden on any operator nor increase the scope of the AD.

Change to Labor Rate Estimate

We have reviewed the figures we have used over the past several years to calculate AD costs to operators. To account for various inflationary costs in the airline industry, we find it necessary to increase the labor rate used in these calculations from $60 per work hour to $65 per work hour. The cost impact information, below, reflects this increase in the specified hourly labor rate.

Cost Impact

There are approximately 2,049 Model 737–100, –200, –200C, –300, –400, and –500 series airplanes of the affected design in the worldwide fleet.

We estimate that, of the 1,144 airplanes of U.S. registry, only 2 airplanes will be affected by the required modification of piping to relocate the pressure relief valve. We estimate that it will take approximately 6 work hours per airplane to accomplish the required actions, and that the average labor rate is $65 per work hour. Based on these figures, the cost impact of the AD on U.S. operators is estimated to be $780, or $390 per airplane.

We also estimate that all of the 1,144 airplanes of U.S. registry will be affected by the required replacement of the pressure relief valve, that it will take approximately 2 work hours per airplane to accomplish the replacement, and that the average labor rate is $65 per work hour. Required parts will cost approximately $300 per airplane. Based on these figures, the cost impact of the replacement of the pressure relief valve on U.S. operators is estimated to be $491,920, or $430 per airplane.

The cost impact figures discussed above are based on assumptions that no operator has yet accomplished any of the requirements of this AD action, and that no operator would accomplish those actions in the future if this AD were not adopted. The cost impact figures discussed in AD rulemaking actions represent only the time necessary to perform the specific actions actually required by the AD. These figures typically do not include incidental costs, such as the time required to gain access and close up, planning time, or time necessitated by other administrative actions.

Regulatory Impact

The regulations adopted herein will not have a substantial direct effect on the States, on the relationship between the national Government and the States, or on the distribution of power and responsibilities among the various levels of government. Therefore, it is determined that this final rule does not have federalism implications under Executive Order 13132.

For the reasons discussed above, I certify that this action (1) Is not a ''significant regulatory action'' under Executive Order 12866; (2) is not a ''significant rule'' under DOT Regulatory Policies and Procedures (44 FR 11034, February 26, 1979); and (3) will not have a significant economic impact, positive or negative, on a substantial number of small entities

under the criteria of the Regulatory Flexibility Act. A final evaluation has been prepared for this action and it is contained in the Rules Docket. A copy of it may be obtained from the Rules Docket at the location provided under the caption **ADDRESSES**.

List of Subjects in 14 CFR Part 39

Air transportation, Aircraft, Aviation safety, Incorporation by reference, Safety.

Adoption of the Amendment

■ Accordingly, pursuant to the authority delegated to me by the Administrator, the Federal Aviation Administration amends part 39 of the Federal Aviation Regulations (14 CFR part 39) as follows:

PART 39—AIRWORTHINESS DIRECTIVES

■ 1. The authority citation for part 39 continues to read as follows:

Authority: 49 U.S.C. 106(g), 40113, 44701.

§ 39.13 [Amended]

■ 2. Section 39.13 is amended by adding the following new airworthiness directive:

2003–26–08 Boeing: Amendment 39–13405. Docket 2000–NM–422–AD.

Applicability: Model 737–100, –200, –200C, –300, –400, and –500 series airplanes; line numbers 1 through 2696 inclusive; certificated in any category.

Compliance: Required as indicated, unless accomplished previously.

To prevent rupture of the potable water tank during flight of the airplane, which could result in structural damage to the airplane and its inability to sustain flight loads, accomplish the following:

Modification and Replacement

(a) For those airplanes listed in the effectivity section of Boeing Service Bulletin 737–38–1029, Revision 1, dated August 19, 1993, on which the modification of the potable water pressurization system specified in the service bulletin has not been accomplished: Within 18 months after the effective date of this AD, except as specified in paragraph (d) of this AD, perform the requirements of paragraphs (a)(1) and (a)(2) of this AD.

(1) Except as specified in paragraphs (a)(1)(i) and (a)(1)(ii) of this AD, modify the potable water pressurization system; in accordance with Boeing Service Bulletin 737–38–1029, dated June 6, 1991; or Revision 1, dated August 19, 1993.

(i) Do not reinstall the existing pressure relief valve having part number (P/N) 520A6DB50.

(ii) Do not perform the leak test procedures specified in the service bulletin.

(2) Install a new pressure relief valve having P/N RV05–362, in accordance with Boeing Service Bulletin 737–38A1047, Revision 2, dated July 18, 2002.

(b) For those airplanes listed in the effectivity section of Boeing Service Bulletin 737–38–1029, dated June 6, 1991; or Revision 1, dated August 19, 1993; on which the modification of the potable water pressurization system specified in that service bulletin has been accomplished: Within 18 months after the effective date of this AD, remove the existing pressure relief valve from the potable water tank, and replace the valve with a new pressure relief valve having P/N RV05–362; in accordance with Boeing Service Bulletin 737–38A1047, Revision 2, dated July 18, 2002.

(c) For all other airplanes having line numbers 1 through 2523 inclusive: Within 18 months after the effective date of this AD unless previously accomplished, remove the existing pressure relief valve from the potable water tank, and replace the valve with a new pressure relief valve having P/N RV05–362, in accordance with Boeing Service Bulletin 737–38A1047, Revision 2, dated July 18, 2002.

Acceptable Compliance With Certain Paragraphs

(d) Installation of a new pressure relief valve having P/N RV05–362, in accordance with Boeing Service Bulletin 737–38A1047, dated November 9, 2000; or Revision 1, dated September 27, 2001; is acceptable for compliance with paragraph (a)(2), (b), or (c) of this AD.

Replacement of Pressure Relief Valve for Certain Airplanes

(e) For airplanes having line numbers 2524 through 2696 inclusive: Within 18 months after the effective date of this AD, remove the existing pressure relief valve from the potable water tank and replace the valve with a new pressure relief valve having P/N RV05–362, in accordance with Boeing Service Bulletin 737–38A1038, Revision 2, dated September 25, 1997.

Acceptable for Compliance With Paragraph (e)

(f) For those airplanes having line numbers 2527 through 2696 inclusive and having air compressors installed in the potable water tank pressurization system: Removal of the existing pressure relief valve from the potable water tank and replacement of the valve with a new pressure relief valve having P/N RV05–362, in accordance with Boeing Service Bulletin 737–38A1038, dated December 1, 1994; or Revision 1, dated February 2, 1995; is acceptable for compliance with the requirements of paragraph (e) of this AD.

Part Installation

(g) As of the effective date of this AD, no person may install a pressure relief valve having P/N 520A6DB50, 520A6DB60, or D524TP6D60 on any airplane.

Alternative Methods of Compliance

(h) In accordance with 14 CFR 39.19, the Manager, Seattle Aircraft Certification Office, FAA, is authorized to approve alternative methods of compliance for this AD.

Incorporation by Reference

(i) Unless otherwise specified in this AD, the actions shall be done in accordance with the service bulletins listed in Table 1 of this AD, as applicable:

TABLE 1.—APPLICABLE SERVICE BULLETINS

Boeing service bulletin—	Revision—	Date—
737–38–1029	original	June 6, 1991
737–38–1029	Revision 1	August 19, 1993
737–38A1038	original	December 1, 1994
737–38A1038	Revision 1	February 2, 1995
737–38A1038	Revision 2	September 25, 1997
737–38A1047	Revision 2	July 18, 2002

This incorporation by reference was approved by the Director of the Federal Register in accordance with 5 U.S.C. 552(a) and 1 CFR part 51. Copies may be obtained from Boeing Commercial Airplane Group, PO Box 3707, Seattle, Washington 98124–2207. Copies may be inspected at the FAA, Transport Airplane Directorate, 1601 Lind Avenue, SW., Renton, Washington; or at the Office of the Federal Register, 800 North Capitol Street, NW., suite 700, Washington, DC.

Effective Date

(j) This amendment becomes effective on February 4, 2004.

Issued in Renton, Washington, on December 19, 2003.

Ali Bahrami,

Acting Manager, Transport Airplane Directorate, Aircraft Certification Service.

[FR Doc. 03–31853 Filed 12–30–03; 8:45 am]

BILLING CODE 4910–13–P

DEPARTMENT OF TRANSPORTATION

Federal Aviation Administration

14 CFR Part 39

[Docket No. 2003–NE–52–AD Amendment 39–13410; AD 2003–24–12R1]

RIN 2120–AA64

Airworthiness Directives; Pratt & Whitney JT9D–3A, –7, –7A, –7F, –7H, –7AH, and –7J Turbofan Engines

AGENCY: Federal Aviation Administration (FAA), DOT.

ACTION: Final rule; request for comments.

SUMMARY: The FAA is revising an existing airworthiness directive (AD) for Pratt & Whitney (PW) JT9D–3A, –7, –7A, –7F, –7H, –7AH, and –7J turbofan engines, with gearbox pressure tube, part number (P/N) 697896, and No. 4 bearing front pressure manifold, P/N 670663, installed. That AD currently requires a one-time visual inspection of the gearbox pressure tube and No. 4 bearing front pressure manifold and the attaching clamp assemblies for correct positioning and for wear and damage, and replacement if necessary. This ad requires the same actions. This AD results from the need to correct errors in depicted clamping to ensure that AD compliance can be achieved, and to relax the level of maintenance required, as an optional method, when inspecting the affected tubing for dents. We are issuing this AD to prevent engine fires caused by failed gearbox pressure tubes or failed No. 4 bearing front pressure manifolds.

DATES: Effective December 18, 2003.

We must receive any comments on this AD by March 1, 2004.

ADDRESSES:

Use one of the following addresses to submit comments on this AD:

- By mail: Federal Aviation Administration (FAA), New England Region, Office of the Regional Counsel, Attention: Rules Docket No. 2003–NE–52–AD, 12 New England Executive Park, Burlington, MA 01803–5299.
- By fax: (781) 238–7055.
- By e-mail: *9-ane-adcomment@faa.gov*

You may examine the AD docket, by appointment, at the FAA, New England Region, Office of the Regional Counsel, 12 New England Executive Park, Burlington, MA.

FOR FURTHER INFORMATION CONTACT: Keith Lardie, Aerospace Engineer, Aircraft Certification Office, FAA, Engine and Propeller Directorate, 12 New England Executive Park; telephone (781) 238–7189; fax (781) 238–7199.

SUPPLEMENTARY INFORMATION: On November 25, 2003, the FAA issued AD 2003–24–12, Amendment 39–13381 (68 FR 67585, December 3, 2003). That AD requires a one-time visual inspection of the gearbox pressure tube and No. 4 bearing front pressure manifold and the attaching clamp assemblies for correct positioning and for wear and damage, and replacement if necessary. That AD was the result of a report of a failed gearbox pressure tube that resulted in an engine fire. That condition, if not corrected, could result in engine fires caused by failed gearbox pressure tubes or failed No. 4 bearing front pressure manifolds.

Actions Since AD 2003–24–12 Was Issued

Since that AD was issued, errors in the depicted clamping configuration have been found. The clamping configuration must be correct to ensure that AD compliance can be achieved. Also, an operator has requested that as an option to inspecting dented tubing by passing a ball bearing through the tube, to add dent depth limit criteria for each specific part number tube. The manufacturer supports this optional method and we have added it to the AD. This method avoids having to disconnect the tube from the engine.

FAA's Determination and Requirements of this AD

The unsafe condition described previously is likely to exist or develop on other PW JT9D–3A, –7, –7A, –7F, –7H, –7AH, and –7J turbofan engines of the same type design. We are issuing this AD to prevent an engine fire caused by a failed gearbox pressure tube. This AD requires a one-time visual inspection of the gearbox pressure tube, P/N 697896, the No. 4 bearing front pressure manifold, P/N 670663, and the attaching clamp assemblies, P/Ns ST1594–06, ST1594–08, and ST1594–10, for correct positioning, for wear and damage, and replacement if necessary.

FAA's Determination of the Effective Date

The effective date of this AD is the same as AD 2003–24–12. We discussed the errors depicted in AD 2003–24–12 with the U.S. operators, and adding the optional dent inspection method, and conclude that there is no adverse impact from using the same effective date.

Changes to 14 CFR Part 39—Effect on the AD

On July 10, 2002, we issued a new version of 14 CFR part 39 (67 FR 47998, July 22, 2002), which governs our AD system. This regulation now includes material that relates to special flight permits, alternative methods of compliance, and altered products. This material previously was included in each individual AD. Since this material is included in 14 CFR part 39, we will not include it in future AD actions.

Comments Invited

This AD is a final rule that involves requirements affecting flight safety and was not preceded by notice and an opportunity for public comment; however, we invite you to submit any written relevant data, views, or arguments regarding this AD. Send your comments to an address listed under **ADDRESSES.** Include ''AD Docket No. 2003–NE–52–AD'' in the subject line of your comments. If you want us to acknowledge receipt of your mailed comments, send us a self-addressed, stamped postcard with the docket number written on it; we will date-stamp your postcard and mail it back to you. We specifically invite comments on the overall regulatory, economic, environmental, and energy aspects of the rule that might suggest a need to modify it. If a person contacts us verbally, and that contact relates to a substantive part of this AD, we will summarize the contact and place the summary in the docket. We will consider all comments received by the closing date and may amend the AD in light of those comments.

We are reviewing the writing style we currently use in regulatory documents. We are interested in your comments on whether the style of this document is clear, and your suggestions to improve the clarity of our communications with you. You may get more information about plain language at *http://www.faa.gov/language* and *http://www.plainlanguage.gov*.

Examining the AD Docket

You may examine the AD Docket (including any comments and service information), by appointment, between 8 a.m. and 4:30 p.m., Monday through Friday, except Federal holidays. See **ADDRESSES** for the location.

Regulatory Findings

We have determined that this AD will not have federalism implications under Executive Order 13132. This AD will not have a substantial direct effect on the States, on the relationship between the national Government and the States, or on the distribution of power and responsibilities among the various levels of government.

For the reasons discussed above, I certify that the regulation:

1. Is not a ''significant regulatory action'' under Executive Order 12866;

2. Is not a ''significant rule'' under the DOT Regulatory Policies and Procedures (44 FR 11034, February 26, 1979); and

3. Will not have a significant economic impact, positive or negative, on a substantial number of small entities under the criteria of the Regulatory Flexibility Act.

We prepared a summary of the costs to comply with this AD and placed it in the AD Docket. You may get a copy of this summary by sending a request to us at the address listed under **ADDRESSES**. Include ''AD Docket No. 2003–NE–52–AD'' in your request.

List of Subjects in 14 CFR Part 39

Air transportation, Aircraft, Aviation safety, Safety.

Adoption of the Amendment

■ Accordingly, under the authority delegated to me by the Administrator, the Federal Aviation Administration amends part 39 of the Federal Aviation Regulations (14 CFR part 39) as follows:

PART 39—AIRWORTHINESS DIRECTIVES

■ 1. The authority citation for part 39 continues to read as follows:

Authority: 49 U.S.C. 106(g), 40113, 44701.

§ 39.13 [Amended]

■ 2. The FAA amends § 39.13 by removing Amendment 39–13381 (68 FR 67585, December 3, 2003), and by adding a new airworthiness directive, Amendment 39–13410, to read as follows:

2003–24–12R1 Pratt & Whitney: Amendment 39–13410. Docket No. 2003–NE–52–AD. Revises AD 2003–24–12, Amendment 39–13381.

Effective Date

(a) The effective date of this AD is the same as AD 2003–24–12, which is December 18, 2003.

Affected ADs

(b) This AD revises AD 2003–24–12.

Applicability

(c) This AD applies to Pratt & Whitney (PW) JT9D–3A, –7, –7A, –7F, –7H, –7AH, and –7J turbofan engines, with gearbox pressure tube, part number (P/N) 697896, and No. 4 bearing front pressure manifold, P/N 670663, installed. These engines are installed on, but not limited to, Boeing 747–100, –200B, –200C, and –200F airplanes.

Unsafe Condition

(d) This AD results from the need to correct errors in depicted clamping, to ensure that AD compliance can be achieved. The actions specified in this AD are intended to prevent engine fires caused by failed gearbox pressure tubes or failed No. 4 bearing front pressure manifolds.

Compliance

(e) You are responsible for having the actions required by this AD performed within 250 hours-in-service or at the next shop visit, whichever occurs first, after the effective date of this AD, unless the actions have already been done.

One-Time Visual Inspection of Clamp Assemblies

(f) Visually inspect the clamp assemblies, P/Ns ST1594–06, ST1594–08, and ST1594–10, (see Figure 1 of this AD) that attach the gearbox pressure tube and the No. 4 bearing front pressure manifold to the engine. Replace clamp assemblies before further flight that are rejected by any of the following rejection criteria:

(1) Cracks, wear, or distortion in clamp metal.

(2) Clamp cushions that are worn, compacted, cracked, coming apart in chunks, deteriorated, or missing. A reddish powder found around the clamp is an indication of deterioration.

BILLING CODE 4910–13–P

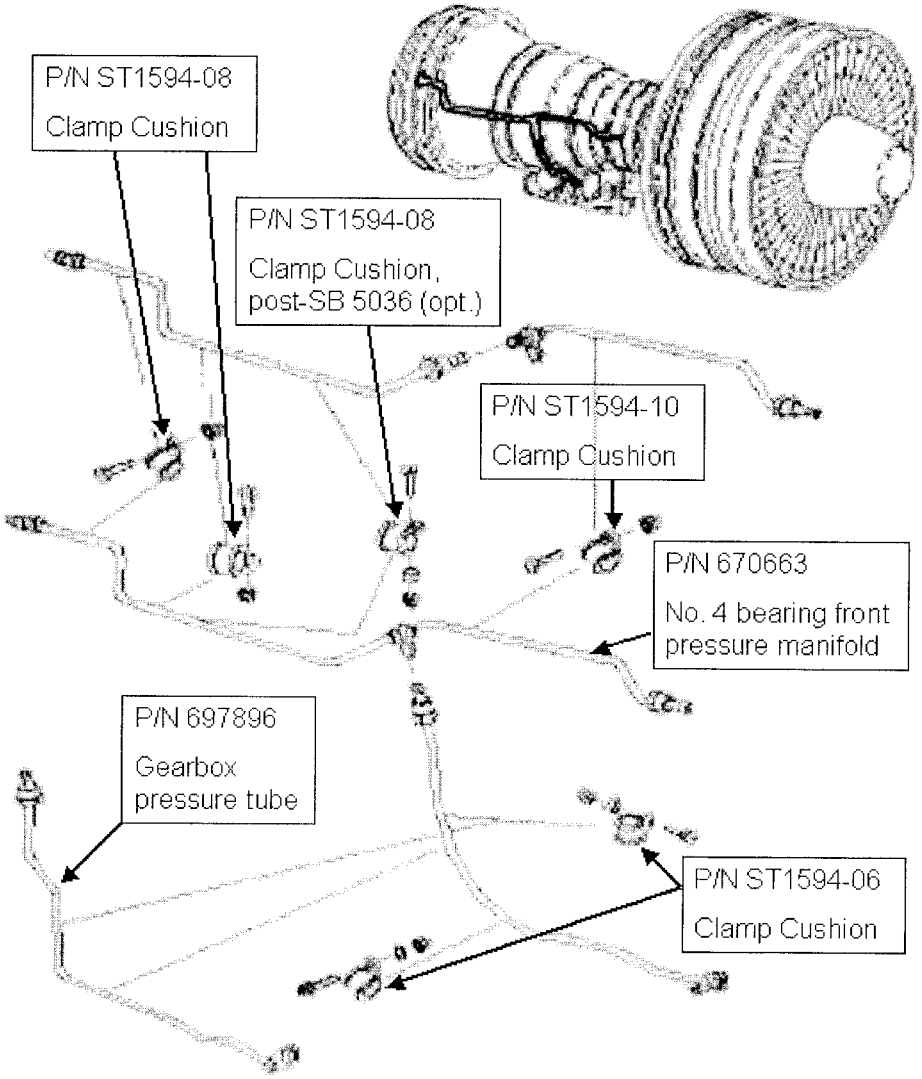

Figure 1

BILLING CODE 4910–13–C

Visual Inspection of Gearbox Pressure Tube and No. 4 Bearing Front Pressure Manifold

(g) If one or more clamp assemblies are rejected as described in paragraph (f) of this AD, or out of position or missing (see Figure 1 of this AD), clean any debris and oil from the outer surface of the gearbox pressure tube and No. 4 bearing front pressure manifold and visually inspect the tube and manifold. Repair or replace the affected tube or manifold before further flight if it is rejected by any of the following rejection criteria:

(1) Nicks, chafing, scratches, and or pitting 0.003 inch or greater in depth.

(2) Dents within 0.25 inch of the ferrules or will not permit free passage of a ball having a minimum diameter of 80% of the tubing inner diameter.

(3) Corrosion that is unable to be removed by a light polishing.

(4) Tube or manifold is leaking oil.

(5) As an option to the dent inspection method specified in paragraph (g)(2) of this AD, measure tube dent depth and use the following rejection criteria:

(i) Dents in the gearbox pressure tube, P/N 697896, greater than 0.055-inch depth.

(ii) Dents in the No. 4 bearing front pressure manifold, P/N 670663, forward of the tee fitting, greater than 0.100-inch depth.

(iii) Dents in the No. 4 bearing front pressure manifold, PN 670663, aft of the tee fitting, greater than 0.080-inch depth.

Gearbox Pressure Tube, No. 4 Bearing Front Pressure Manifold, and Clamp Assembly Positioning

(h) Ensure that the gearbox pressure tube, No. 4 bearing front pressure manifold, and clamp assemblies are properly positioned, before further flight, as shown in Figure 1 of this AD.

(i) Information on general inspection of these parts can be found in the Boeing 747 Aircraft Maintenance Manual, section 72–00–00, and in PW Standard Practices Manual, P/N 585005.

Reporting Requirements

(j) Report within 30 calendar days of the inspection, the results that equal or exceed the reject criteria to: Engine Certification Office, FAA, Engine and Propeller Directorate, 12 New England Executive Park, Burlington, MA 01803–5299; telephone (781) 238–7189; fax (781) 238–7199. Reporting requirements have been approved by the Office of Management and Budget control number 2120–0056.

Alternative Methods of Compliance

(k) The Manager, Engine Certification Office, has the authority to approve alternative methods of compliance for this AD if requested using the procedures found in 14 CFR 39.19.

Material Incorporated by Reference

(l) None.

Related Information

(m) None.

Issued in Burlington, Massachusetts, on December 23, 2003.

Mark C. Fulmer,

Acting Manager, Engine and Propeller Directorate, Aircraft Certification Service.

[FR Doc. 03–32155 Filed 12–30–03; 8:45 am]

BILLING CODE 4910–13–P

DEPARTMENT OF TRANSPORTATION

Federal Aviation Administration

14 CFR Part 39

[Docket No. 2003–NE–40–AD; Amendment 39–13407; AD 2003–26–09]

RIN 2120–AA64

Airworthiness Directives; Pratt & Whitney PW4074, PW4074D, PW4077, PW4077D, PW4084, PW4084D, PW4090, PW4090D, PW4090–3, and PW4098 Turbofan Engines

AGENCY: Federal Aviation Administration (FAA), DOT.

ACTION: Final rule; request for comments.

SUMMARY: The FAA is superseding an existing airworthiness directive (AD) for Pratt & Whitney PW4074, PW4074D, PW4077, PW4077D, PW4084, PW4084D, PW4090, PW4090D, PW4090–3, and PW4098 turbofan engines. That AD requires initial and repetitive visual and borescope inspections of the No. 3 bearing weep tube and turbine exhaust case (TEC), and removal of the high pressure turbine (HPT) assembly and replacement of any heat distressed HPT assembly hardware if oil wetting or staining is found.

This ad requires the same actions. This AD results from the finding of a significant reference error in one of the borescope inspection compliance paragraphs. We are issuing this AD to prevent thermal distressed HPT assembly hardware from remaining in service, which could result in a cracked HPT stage 1 disk or HPT stage 1–2 air seal and an uncontained engine failure.

DATES: Effective December 3, 2003. The Director of the Federal Register approved the incorporation by reference of certain publications listed in the regulations as of December 3, 2003.

We must receive any comments on this AD by March 1, 2004.

ADDRESSES: Use one of the following addresses to submit comments on this AD:

- By mail: Federal Aviation Administration (FAA), New England Region, Office of the Regional Counsel, Attention: Rules Docket No. 2003–NE–40–AD, 12 New England Executive Park, Burlington, MA 01803–5299.
- By fax: (781) 238–7055.
- By e-mail: *9-ane-adcomment@faa.gov*

You can get the service information referenced in this AD from Pratt & Whitney, 400 Main St., East Hartford, CT 06108; telephone (860) 565–7700; fax (860) 565–1605.

You may examine the AD docket, by appointment, at the FAA, New England Region, Office of the Regional Counsel, 12 New England Executive Park, Burlington, MA. You may examine the service information, by appointment, at the FAA, New England Region, Office of the Regional Counsel, 12 New England Executive Park, Burlington, MA; or at the Office of the Federal Register, 800 North Capitol Street, NW., suite 700, Washington, DC.

FOR FURTHER INFORMATION CONTACT: Keith Lardie, Aerospace Engineer, Engine Certification Office, FAA, Engine and Propeller Directorate, 12 New England Executive Park, Burlington, MA 01803–5299; telephone (781) 238–7189; fax (781) 238–7199.

SUPPLEMENTARY INFORMATION: On October 24, 2003, the FAA issued AD 2003–22–09, Amendment 39–13357 (68 FR 62228, November 3, 2003). That AD requires:

- Borescope inspection of the No. 3 bearing weep tube, on engines with high oil consumption that troubleshooting procedures fail to determine the source of oil loss.
- For all engines, initial and repetitive visual inspections of the turbine exhaust case (TEC) in the vicinity of the No. 3 bearing oil vent tube for evidence of oil wetting or staining. If the vent tube borescope inspection is unsuccessful due to tube blockage, that AD also requires borescope inspections of the HPT assembly for oil wetting or staining.
- Removal of the HPT assembly and replacement of any heat distressed HPT assembly hardware if oil wetting or staining is found.

That AD is the result of engine HPT assembly hardware being damaged as a result of thermal distress from oil igniting after leaking from the No. 3 bearing compartment. That condition, if not corrected, could result in a cracked HPT stage 1 disk or HPT stage 1–2 air seal and an uncontained engine failure.

Actions Since AD 2003–22–09 Was Issued

Since that AD was issued, a comment was received that revealed an error in the compliance section. We have considered that comment.

Incorrect Inspection Reference

One commenter states that paragraph (i)(3) of the AD contains an incorrect reference. In that paragraph, the wording ''since performing the visual inspection of the TEC specified in paragraph (h)(1) of this AD'', is misleading as it should be referencing borescope inspection and not visual inspection.

We agree. Therefore, we have corrected the wording to read ''since performing the borescope inspection of the No. 3 bearing oil vent tube specified in paragraph (i)(1) of this AD'.

AD Effectivity

The effective date of this AD is the same as AD 2003–22–09. We discussed the reference error in AD 2003–22–09 with the one U.S. operator, and conclude that there is no adverse impact from using the same effective date.

Relevant Service Information

We have reviewed and approved the technical contents of Pratt & Whitney Alert Service Bulletin (ASB) No. PW4G–112-A72–257, Revision 1, dated August 22, 2003, that describes procedures for:

- Borescope inspection of the No. 3 bearing weep tube, on engines with high oil consumption that troubleshooting procedures fail to determine the source of oil loss.
- For all engines, initial and repetitive visual inspections of the TEC, in the vicinity of the No. 3 bearing oil vent tube assembly and borescope inspections of the No. 3 bearing oil vent tube assembly, for evidence of oil wetting or staining.
- Borescope inspection of the HPT assembly for evidence of oil wetting or staining if the borescope inspection of the No. 3 bearing oil vent tube assembly is unsuccessful due to blockage.
- Removal of the engine if oil wetting or staining is found.

Differences Between This AD and the Service Information

Although ASB No. PW4G–112–A72–257, Revision 1, dated August 22, 2003, requires removal of the engine from service if oil wetting or staining is found, this AD requires removal of the HPT assembly and replacement of any heat distressed HPT assembly hardware if oil wetting or staining is found.

FAA's Determination and Requirements of This AD

The unsafe condition described previously is likely to exist or develop on other Pratt & Whitney PW4074,

PW4074D, PW4077, PW4077D, PW4084, PW4084D, PW4090, PW4090D, PW4090–3, and PW4098 turbofan engines of the same type design. We are issuing this AD to prevent thermal distressed HPT assembly hardware to remain in service, which could result in a cracked HPT stage 1 disk or HPT stage 1–2 air seal and an uncontained engine failure. This AD requires:

- Borescope inspection of the No. 3 bearing weep tube on engines with high oil consumption that troubleshooting procedures fail to determine the source of oil loss.
- For all engines, initial and repetitive visual inspections of the TEC, in the vicinity of the No. 3 bearing oil vent tube assembly and borescope inspections of the No. 3 bearing oil vent tube assembly, for evidence of oil wetting or staining.
- Borescope inspections of the HPT assembly for oil wetting or staining, if the vent tube borescope inspection is unsuccessful due to tube blockage.
- Removal of the HPT assembly and replacement of any heat distressed HPT assembly hardware if oil wetting or staining is found.

You must use the service information described previously to perform the actions required by this AD.

FAA's Determination of the Effective Date

Since an unsafe condition exists that requires the immediate adoption of this AD, we have found that notice and opportunity for public comment before issuing this AD are impracticable, and that good cause exists for making this amendment effective in less than 30 days.

Changes to 14 CFR Part 39—Effect on the AD

On July 10, 2002, we issued a new version of 14 CFR part 39 (67 FR 47998, July 22, 2002), which governs our AD system. This regulation now includes material that relates to special flight permits, alternative methods of compliance, and altered products. This material previously was included in each individual AD. Since this material is included in 14 CFR part 39, we will not include it in future AD actions.

Interim Action

These actions are interim actions and we may take further rulemaking actions in the future.

Comments Invited

This AD is a final rule that involves requirements affecting flight safety and was not preceded by notice and an opportunity for public comment; however, we invite you to submit any written relevant data, views, or arguments regarding this AD. Send your comments to an address listed under **ADDRESSES.** Include ''AD Docket No. 2003-NE–40-AD'' in the subject line of your comments. If you want us to acknowledge receipt of your mailed comments, send us a self-addressed, stamped postcard with the docket number written on it; we will date-stamp your postcard and mail it back to you. We specifically invite comments on the overall regulatory, economic, environmental, and energy aspects of the rule that might suggest a need to modify it. If a person contacts us verbally, and that contact relates to a substantive part of this AD, we will summarize the contact and place the summary in the docket. We will consider all comments received by the closing date and may amend the AD in light of those comments.

We are reviewing the writing style we currently use in regulatory documents. We are interested in your comments on whether the style of this document is clear, and your suggestions to improve the clarity of our communications with you. You may get more information about plain language at *http://www.faa.gov/language* and *http://www.plainlanguage.gov*.

Examining the AD Docket

You may examine the AD Docket (including any comments and service information), by appointment, between 8:00 a.m. and 4:30 p.m., Monday through Friday, except Federal holidays. See **ADDRESSES** for the location.

Regulatory Findings

We have determined that this AD will not have federalism implications under Executive Order 13132. This AD will not have a substantial direct effect on the States, on the relationship between the national Government and the States, or on the distribution of power and responsibilities among the various levels of government.

For the reasons discussed above, I certify that the regulation:

1. Is not a ''significant regulatory action'' under Executive Order 12866;
2. Is not a ''significant rule'' under the DOT Regulatory Policies and Procedures (44 FR 11034, February 26, 1979); and
3. Will not have a significant economic impact, positive or negative, on a substantial number of small entities under the criteria of the Regulatory Flexibility Act.

We prepared a summary of the costs to comply with this AD and placed it in the AD Docket. You may get a copy of this summary by sending a request to us at the address listed under **ADDRESSES.** Include ''AD Docket No. 2003–NE–40–AD'' in your request.

List of Subjects in 14 CFR Part 39

Air transportation, Aircraft, Aviation safety, Incorporation by reference, Safety.

Adoption of the Amendment

■ Accordingly, under the authority delegated to me by the Administrator, the Federal Aviation Administration amends part 39 of the Federal Aviation Regulations (14 CFR part 39) as follows:

PART 39—AIRWORTHINESS DIRECTIVES

■ 1. The authority citation for part 39 continues to read as follows:

Authority: 49 U.S.C. 106(g), 40113, 44701.

§ 39.13 [Amended]

■ 2. The FAA amends § 39.13 by removing Amendment 39–13357 (68 FR 62228, November 3, 2003), and by adding a new airworthiness directive, Amendment 39–13407, to read as follows:

2003–26–09 Pratt & Whitney: Amendment 39–13407. Docket No. 2003–NE–40–AD. Supersedes AD 2003–22–09, Amendment 39–13357.

Effective Date

(a) The effective date of this AD is the same as AD 2003–22–09, which is December 3, 2003.

Affected ADs

(b) This AD supersedes AD 2003–22–09.

Applicability

(c) This AD applies to Pratt & Whitney PW4074, PW4074D, PW4077, PW4077D, PW4084, PW4084D, PW4090, PW4090D, PW4090–3, and PW4098 turbofan engines. These engines are installed on, but not limited to, Boeing 777 series airplanes.

Unsafe Condition

(d) This AD results from the finding of a significant reference error in one of the borescope inspection compliance paragraphs of AD 2003–22–09. This AD also results from reports of engine high pressure turbine (HPT) assembly hardware being damaged as a result of thermal distress from oil igniting after leaking from the No. 3 bearing compartment. We are issuing this AD to prevent thermal distressed HPT assembly hardware from remaining in service, which could result in a cracked HPT stage 1 disk and HPT stage 1–2 air seal and an uncontained engine failure.

Compliance

(e) You are responsible for having the actions required by this AD performed within the compliance times specified unless the actions have already been done.

Credit for Previous Inspections

(f) Inspections performed before the effective date of this AD, using AD 2003–22–09 or Pratt & Whitney Alert Service Bulletin (ASB) No. PW4G–112–A72–257, dated June 30, 2003, may be counted toward satisfying the initial and repetitive inspection requirements of paragraphs (g) through (k) of this AD.

Borescope Inspection of Engines With High Oil Consumption

(g) For engines with high oil consumption that troubleshooting procedures fail to determine the source of oil loss, borescope-inspect No. 3 bearing oil vent tube assembly and or HPT assembly within 100 cycles-in-service (CIS) of the high oil consumption event, using paragraphs (g)(1) through (g)(2) of this AD. Information on troubleshooting engines with high oil consumption can be found in Boeing 777 Fault Isolation Manual (FIM), section 71–05, Task 830. See paragraph (l) of this AD for a definition of high oil consumption.

(1) Borescope-inspect the No. 3 bearing oil vent tube assembly for evidence of oil wetting or staining. Follow Step 3, paragraphs 1. through 1.A.(8)(a) of Accomplishment Instructions of Pratt & Whitney ASB No. PW4G–112–A72–257, Revision 1, dated August 22, 2003.

(2) If the No. 3 bearing oil vent tube is blocked and attempts to clear it are unsuccessful, borescope-inspect the HPT assembly, following Step 4, paragraphs 1. through 1.B(14) of Accomplishment Instructions of ASB No. PW4G–112–A72–257, Revision 1, dated August 22, 2003.

(3) Remove the HPT assembly within 100 CIS of the high oil consumption event if evidence of oil wetting or staining is found in the No. 3 bearing oil vent tube or on the HPT first stage disk.

(4) Replace any heat distressed HPT assembly hardware if oil wetting or staining is found.

Turbine Exhaust Case (TEC) Inspections Of All Engines

(h) Inspect the TEC of all engines, within 500 hours-in-service (HIS) after the effective date of this AD as follows:

(1) Visually inspect the TEC in the vicinity of the No. 3 bearing oil vent tube assembly for evidence of oil wetting or staining, using Figure 2 of Pratt & Whitney ASB No. PW4G–112–A72–257, Revision 1, dated August 22, 2003, for location of inspection.

(2) If evidence of oil wetting or staining is found at the TEC, borescope-inspect the No. 3 bearing oil vent tube assembly within 100 additional CIS, to confirm the oil is from the vent tube. Follow Step 1, paragraphs 1.B. through 1.D.(8)(a) of Accomplishment Instructions of Pratt & Whitney ASB No. PW4G–112–A72–257, Revision 1, dated August 22, 2003.

(3) If the No. 3 bearing oil vent tube is blocked and attempts to clear it are unsuccessful, borescope-inspect the HPT assembly following Step 4, paragraphs 1. through 1.B.(14) of Accomplishment Instructions of ASB No. PW4G–112–A72–257, Revision 1, dated August 22, 2003.

(4) Remove the HPT assembly within 100 CIS since performing the visual inspection of the TEC specified in paragraph (h)(1) of this AD, if evidence of oil wetting or staining is found in the No. 3 bearing oil vent tube or found on the HPT first stage disk.

(5) Replace any heat distressed HPT assembly hardware if oil wetting or staining is found.

Borescope Inspections of All Engines

(i) Borescope-inspect the No. 3 bearing oil vent tube assembly of all engines at or before accumulating 600 CIS or 2,000 HIS, whichever occurs first, after the effective date of this AD, as follows:

(1) Borescope-inspect the No. 3 bearing oil vent tube assembly for evidence of oil wetting or staining. Follow Step 2, paragraphs 1. through 1.A.(8) of Accomplishment Instructions of Pratt & Whitney ASB No. PW4G–112–A72–257, Revision 1, dated August 22, 2003.

(2) If the No. 3 bearing oil vent tube is blocked and attempts to clear it are unsuccessful, borescope-inspect the HPT assembly following Step 4, paragraphs 1. through 1.B.(14) of Accomplishment Instructions of ASB No. PW4G–112–A72–257, Revision 1, dated August 22, 2003.

(3) Remove the HPT assembly within 100 CIS since performing the borescope inspection of the No. 3 bearing oil vent tube specified in paragraph (i)(1) of this AD, if evidence of oil wetting or staining is found in the No. 3 bearing oil vent tube or found on the HPT first stage disk.

(4) Replace any heat distressed HPT assembly hardware if oil wetting or staining is found.

Repetitive Inspections of All Engines

(j) Repeat the inspections of the TEC of all engines by following paragraphs (h)(1) through (h)(3) of this AD, at intervals not to exceed 500 HIS since last visual check of the TEC, and disposition the engine as specified in paragraphs (h)(4) through (h)(5) of this AD.

(k) Repeat borescope inspections of all engines by following paragraphs (i)(1) through (i)(2) of this AD, at intervals not to exceed 600 CIS or 2,000 HIS since last borescope inspection of the No. 3 oil vent tube, and disposition the engine as specified in paragraphs (i)(3) through (i)(4) of this AD.

Definition

(l) For the purposes of this AD, high oil consumption is defined as an engine consuming more than 0.5 quarts of oil per hour, as provided in the Boeing 777 FIM.

Alternative Methods of Compliance

(m) The Manager, Engine Certification Office, has the authority to approve alternative methods of compliance for this AD if requested using the procedures found in 14 CFR 39.19.

Material Incorporated by Reference

(n) You must follow Pratt & Whitney Alert Service Bulletin specified in Table 1 to perform the inspections required by this AD. The Director of the Federal Register approved the incorporation by reference of this service bulletin as of December 3, 2003 (68 FR 62228, November 3, 2003) in accordance with 5 U.S.C. 552(a) and 1 CFR part 51. You can get a copy from Pratt & Whitney, 400 Main St., East Hartford, CT 06108; telephone (860) 565–7700; fax (860) 565–1605. You may review copies at the FAA, New England Region, Office of the Regional Counsel, 12 New England Executive Park, Burlington, MA; or at the Office of the Federal Register, 800 North Capitol Street, NW, suite 700, Washington, DC.

TABLE 1—INCORPORATION BY REFERENCE

Alert service bulletin No.	Page No.	Revision	Date
PW4G–112–A72–257	1–5	1	August 22, 2003.
	6–7	Original	June 30, 2003.
	8	1	August 22, 2003.
	9	Original	June 30, 2003.
	10	1	August 22, 2003.
	11	Original	June 30, 2003.
	12	1	August 22, 2003.
	13–22	Original	June 30, 2003.
Total Pages: 22			

Related Information

(o) Boeing 777 Fault Isolation Manual, section 71–05, Task 830, pertains to high oil consumption troubleshooting procedures referred to in this AD.

Issued in Burlington, Massachusetts, on December 23, 2003.

Mark C. Fulmer,

Acting Manager, Engine and Propeller Directorate, Aircraft Certification Service.

[FR Doc. 03–32156 Filed 12–30–03; 8:45 am]

BILLING CODE 4910–13–P

DEPARTMENT OF TRANSPORTATION

Federal Aviation Administration

14 CFR Part 71

[Docket No. FAA–2003–16407; Airspace Docket No. 03–ACE–75]

Modification of Class D Airspace; and Modification of Class E Airspace; Topeka, Philip Billard Municipal Airport, KS

AGENCY: Federal Aviation Administration (FAA), DOT.

ACTION: Direct final rule; confirmation of effective date.

SUMMARY: This document confirms the effective date of the direct final rule which revises Class D and Class E airspace at Topeka, Philip Billard Municipal Airport, KS.

EFFECTIVE DATE: 0901 UTC, February 19, 2004.

FOR FURTHER INFORMATION CONTACT: Kathy Randolph, Air Traffic Division, Airspace Branch, ACE–520C, DOT Regional Headquarters Building, Federal Aviation Administration, 901 Locust, Kansas City, MO 64106; telephone: (816) 329–2525.

SUPPLEMENTARY INFORMATION: The FAA published this direct final rule with a request for comments in the **Federal Register** on November 12, 2003 (68 FR 63985). The FAA uses the direct final rulemaking procedure for a non-controversial rule where the FAA believes that there will be no adverse public comment. This direct final rule advised the public that no adverse comments were anticipated, and that unless a written adverse comment, or a written notice of intent to submit such an adverse comment, were received within the comment period, the regulation would become effective on February 19, 2004. No adverse comments were received, and thus this notice confirms that this direct final rule will become effective on that date.

Issued in Kansas City, MO, on December 16, 2003.

Paul J. Sheridan,

Acting Manager, Air Traffic Division, Central Region.

[FR Doc. 03–32086 Filed 12–30–03; 8:45 am]

BILLING CODE 4910–13–M

DEPARTMENT OF TRANSPORTATION

Federal Aviation Administration

14 CFR Part 71

[Docket No. FAA–2003–16411; Airspace Docket No. 03–ACE–77]

Modification of Class E Airspace; Johnson, KS

AGENCY: Federal Aviation Administration (FAA), DOT.

ACTION: Direct final rule; confirmation of effective date.

SUMMARY: This document confirms the effective date of the direct final rule which revises Class E airspace at Johnson, KS.

EFFECTIVE DATE: 0901 UTC, February 19, 2004.

FOR FURTHER INFORMATION CONTACT: Kathy Randolph, Air Traffic Division, Airspace Branch, ACE–520C, DOT Regional Headquarters Building, Federal Aviation Administration, 901 Locust, Kansas City, MO 64106; telephone: (816) 329–2525.

SUPPLEMENTARY INFORMATION: The FAA published this direct final rule with a request for comments in the **Federal Register** on November 19, 2003 (68 FR 65159). The FAA uses the direct final rulemaking procedure for a non-controversial rule where the FAA believes that there will be no adverse public comment. This direct final rule advised the public that no adverse comments were anticipated, and that unless a written adverse comment, or a written notice of intent to submit such an adverse comment, were received within the comment period, the regulation would become effective on February 19, 2004. No adverse comments were received, and thus this notice confirms that this direct final rule will become effective on that date.

Issued in Kansas City, MO, on December 16, 2003.

Paul J. Sheridan,

Acting Manager, Air Traffic Division, Central Region.

[FR Doc. 03–32087 Filed 12–30–03; 8:45 am]

BILLING CODE 4910–13–M

DEPARTMENT OF TRANSPORTATION

Federal Aviation Administration

14 CFR Part 97

[Docket No. 30400; Amdt. No. 3086]

Standard Instrument Approach Procedures; Miscellaneous Amendments

AGENCY: Federal Aviation Administration (FAA), DOT.

ACTION: Final rule.

SUMMARY: This amendment establishes, amends, suspends, or revokes Standard Instrument Approach Procedures (SIAPs) for operations at certain airports. These regulatory actions are needed because of the adoption of new or revised criteria, or because of changes occurring in the National Airspace System, such as the commissioning of new navigational facilities, addition of new obstacles, or changes in air traffic requirements. These changes are designed to provide safe and efficient use of the navigable airspace and to promote safe flight operations under instrument flight rules at the affected airports.

DATES: This rule is effective December 31, 2003. The compliance date for each SIAP is specified in the amendatory provisions.

The incorporation by reference of certain publications listed in the regulations is approved by the Director of the Federal Register as of December 31, 2003.

ADDRESSES: Availability of matters incorporated by reference in the amendment is as follows:

For Examination—

1. FAA Rules Docket, FAA Headquarters Building, 800 Independence Avenue, SW., Washington, DC 20591;

2. The FAA Regional Office of the region in which the affected airport is located;

3. The Flight Inspection Area Office which originated the SIAP; or,

4. The Office of **Federal Register**, 800 North Capitol Street, NW., Suite 700, Washington, DC.

For Purchase—Individual SIAP copies may be obtained from:

1. FAA Public Inquiry Center (APA–200), FAA Headquarters Building, 800 Independence Avenue, SW., Washington, DC 20591; or

2. The FAA Regional Office of the region in which the affected airport is located.

By Subscription—Copies of all SIAPs, mailed once every 2 weeks, are for sale

by the Superintendent of Documents, U.S. Government Printing Office, Washington, DC 20402.

FOR FURTHER INFORMATION CONTACT: Donald P. Pate, Flight Procedure Standards Branch (AMCAFS–420), Flight Technologies and Programs Division, Flight Standards Service, Federal Aviation Administration, Mike Monroney Aeronautical Center, 6500 South MacArthur Blvd. Oklahoma City, OK. 73169 (Mail Address: P.O. Box 25082 Oklahoma City, OK. 73125) telephone: (405) 954–4164.

SUPPLEMENTARY INFORMATION: This amendment to part 97 of the Federal Aviation Regulations (14 CFR part 97) establishes, amends, suspends, or revokes Standard Instrument Approach Procedures (SIAPs). The complete regulatory description of each SIAP is contained in official FAA form documents which are incorporated by reference in this amendment under 5 U.S.C. 552(a), 1 CFR part 51, and § 97.20 of the Federal Aviation Regulations (FAR). The applicable FAA Forms are identified as FAA Forms 8260–3, 8260–4, and 8260–5. Materials incorporated by reference are available for examination or purchase as stated above.

The large number of SIAPs, their complex nature, and the need for a special format make their verbatim publication in the **Federal Register** expensive and impractical. Further, airmen do not use the regulatory text of the SIAPs, but refer to their graphic depiction on charts printed by publishers of aeronautical materials. Thus, the advantages of incorporation by reference are realized and publication of the complete description of each SIAP contained in FAA form documents is unnecessary. The provisions of this amendment state the affected CFR (and FAR) sections, with the types and effective dates of the SIAPs. This amendment also identifies the airport, its location, the procedure identification and the amendment number.

The Rule

This amendment to part 97 is effective upon publication of each separate SIAP as contained in the transmittal. Some SIAP amendments may have been previously issued by the FAA in a National Flight Data Center (NFDC) Notice to Airmen (NOTAM) as an emergency action of immediate flight safety relating directly to published aeronautical charts. The circumstances which created the need for some SIAP amendments may require making them effective in less than 30 days. For the remaining SIAPs, an effective date at least 30 days after publication is provided.

Further, the SIAPs contained in this amendment are based on the criteria contained in the U.S. Standard for Terminal Instrument Procedures (TERPS). In developing these SIAPs, the TERPS criteria were applied to the conditions existing or anticipated at the affected airports. Because of the close and immediate relationship between these SIAPs and safety in air commerce, I find that notice and public procedure before adopting these SIAPs are impracticable and contrary to the public interest and, where applicable, that good cause exists for making some SIAPs effective in less than 30 days.

Conclusion

The FAA has determined that this regulation only involves an established body of technical regulations for which frequent and routine amendments are necessary to keep them operationally current. It, therefore—(1) is not a ''significant regulatory action'' under Executive Order 12866; (2) is not a ''significant rule'' under DOT Regulatory Policies and Procedures (44 FR 11034; February 26, 1979); and (3) does not warrant preparation of a regulatory evaluation as the anticipated impact is so minimal. For the same reason, the FAA certifies that this amendment will not have a significant economic impact on a substantial number of small entities under the criteria of the Regulatory Flexibility Act.

List of Subjects in 14 CFR Part 97

Air Traffic Control, Airports, Incorporation by reference, and Navigation (Air).

Issued in Washington, DC on December 19, 2003.

James J. Ballough,

Director, Flight Standards Service.

Adoption of the Amendment

■ Accordingly, pursuant to the authority delegated to me, part 97 of the Federal Aviation Regulations (14 CFR part 97) is amended by establishing, amending, suspending, or revoking Standard Instrument Approach Procedures, effective at 0901 UTC on the dates specified, as follows:

PART 97—STANDARD INSTRUMENT APPROACH PROCEDURES

■ 1. The authority citation for part 97 continues to read as follows:

Authority: 49 U.S.C. 106(g), 40103, 40106, 40113, 40114, 40120, 44502, 44514, 44701, 44719, 44721–44722.

■ 2. Part 97 is amended to read as follows:

* * * *Effective January 22, 2004*

Frederick, MD, Frederick Muni, RNAV (GPS) RWY 23, Amdt 2, CANCELLED
Frederick, MD, Frederick Muni, RNAV (GPS) Y RWY 23, Orig
Frederick, MD, Frederick Muni, RNAV (GPS) Z RWY 23, Orig

* * * *Effective February 19, 2004*

Deadhorse, AK, Deadhorse, ILS OR LOC/DME RWY 4, Orig
Deadhorse, AK, Deadhorse, GPS RWY 22, Orig, CANCELLED
Deadhorse, AK, Deadhorse, GPS RWY 4, Orig, CANCELLED
Deadhorse, AK, Deadhorse, VOR/DME OR TACAN RWY 22, Amdt 3
Deadhorse, AK, Deadhorse, VOR/DME OR TACAN RWY 4, Amdt 1
Deadhorse, AK, Deadhorse, LOC/DME BC RWY 22, Amdt 9
Deadhorse, AK, Deadhorse, RNAV (GPS) RWY 22, Orig
Deadhorse, AK, Deadhorse, RNAV (GPS) RWY 4, Orig
Deadhorse, AK, Deadhorse, ILS/DME RWY 4, Amdt 8, CANCELLED
Harrison, AR, Boone County, ILS RWY 36, Orig–A
Harrison, AR, Boone County, NDB–B, Amdt 3A
Russellville, AR, Russellville Rgnl, NDB–A, Amdt 4B
Russellville, AR, Russellville Rgnl, RNAV (GPS) RWY 25, Orig
Russellville, AR, Russellville Rgnl, GPS RWY 25, Orig–B, CANCELLED
Hanford, CA, Hanford Muni, VOR–A, Amdt 9
Hanford, CA, Hanford Muni, RNAV (GPS) RWY 32, Orig
Hanford, CA, Hanford Muni, GPS RWY 32, Amdt 1, CANCELLED
Oceanside, CA, Oceanside Muni, VOR–A, Amdt 3D
San Carlos, CA, San Carlos, RNAV (GPS) RWY 30, Orig
San Carlos, CA, San Carlos, GPS RWY 30, Orig, CANCELLED
Statesboro, GA, Statesboro-Bulloch County, ILS OR LOC RWY 32, Amdt 1A
De Ridder, LA, Beauregard Parish, RNAV (GPS) RWY 36, Orig
De Ridder, LA, Beauregard Parish, LOC RWY 36, Amdt 2
De Ridder, LA, Beauregard Parish, NDB RWY 36, Amdt 4
Gaithersburg, MD, Montgomery County Airpark, RNAV (GPS) RWY 14, Amdt 2
St Cloud, MN, St Cloud Regional, RNAV (GPS) RWY 31, Orig
St Cloud, MN, St Cloud Regional, RNAV (GPS) RWY 13, Orig
St Cloud, MN, St Cloud Regional, RNAV (GPS) RWY 5, Orig

St Cloud, MN, St Cloud Regional, RNAV (GPS) RWY 23, Orig

St Cloud, MN, St Cloud Regional, GPS RWY 23, Orig–B, CANCELLED

St Cloud, MN, St Cloud Regional, GPS RWY 5, Orig–B, CANCELLED

Mexico, MO, Mexico Memorial, RNAV (GPS) RWY 6, Orig

Mexico, MO, Mexico Memorial, GPS RWY 6, Orig–A, CANCELLED

Mexico, MO, Mexico Memorial, RNAV (GPS) RWY 18, Orig

Mexico, MO, Mexico Memorial, VOR/DME RWY 24, Amdt 2

Mexico, MO, Mexico Memorial, RNAV (GPS) RWY 24, Orig

Mexico, MO, Mexico Memorial, GPS RWY 24, Orig–A, CANCELLED

Mexico, MO, Mexico Memorial, RNAV (GPS) RWY 36, Orig

Plattsmouth, NE, Plattsmouth Muni, NDB RWY 16, Orig

Plattsmouth, NE, Plattsmouth Muni, NDB RWY 34, Orig

Plattsmouth, NE, Plattsmouth Muni, GPS RWY 34, Orig–B

Newburgh, NY, Stewart Intl, RNAV (GPS) RWY 9, Orig–A

Newburgh, NY, Stewart Intl, RNAV (GPS) RWY 27, Orig–A

White Plains, NY, Westchester County, RNAV (GPS) RWY 16, Orig–A

Seminole, OK, Seminole Muni, NDB RWY 16, Amdt 3A

Seminole, OK, Seminole Muni, RNAV (GPS) RWY 16, Orig–A

Harrisburg, PA, Harrisburg Intl, VOR RWY 31, Amdt 2

Pawtucket, RI, North Central State, LOC RWY 5, Amdt 5D

Dallas-Fort Worth, TX, Dallas/Fort Worth International, RNAV (GPS) RWY 17L, Orig–A

Kingsville, TX, Kleberg County, RADAR–1, Amdt 4, CANCELLED

Quinton, VA, New Kent County, RNAV (GPS) RWY 10, Orig

Quinton, VA, New Kent County, RNAV (GPS) RWY 28, Orig

Quinton, VA, New Kent County, VOR–A, Amdt 1

Elkins, WV, Elkins-Randolph Co—Jennings Randolph Field, LDA–C, Amdt 7

Janesville, WI, Southern Wisconsin Regional, ILS OR LOC RWY 32, Orig

Janesville, WI, Southern Wisconsin Regional, ILS OR LOC RWY 4, Amdt 12

[FR Doc. 03–32082 Filed 12–30–03; 8:45 am]

BILLING CODE 4910–13–P

DEPARTMENT OF COMMERCE

Bureau of Economic Analysis

15 CFR Part 801

[Docket No. 030910227–3318–02]

RIN 0691–AA53

International Services Surveys: BE–45, Quarterly Survey of Insurance Transactions by U.S. Insurance Companies with Foreign Persons

AGENCY: Bureau of Economic Analysis, Commerce.

ACTION: Final rule.

SUMMARY: This final rule amends regulations that set forth the reporting requirements for the BE–45, Quarterly Survey of Insurance Transactions by U.S. Insurance Companies with Foreign Persons.

The survey is mandatory and will be conducted by the Bureau of Economic Analysis (BEA), U.S. Department of Commerce, under the International Investment and Trade in Services Survey Act. The first survey conducted under this rule will cover transactions in the first quarter of 2004. Data from the BE–45 survey are needed to monitor trade in insurance services, analyze its impact on the U.S. and foreign economies, compile and improve the U.S. economic accounts, support U.S. commercial policy on financial services, conduct trade promotion, improve the ability of U.S. businesses to identify and evaluate market opportunities, and for other government uses.

The survey will cover the same insurance services presently covered by the BE–48, Annual Survey of Reinsurance and Other Insurance Transactions by U.S. Insurance Companies with Foreign Persons, and auxiliary insurance services presently covered by the Benchmark and Annual Surveys of Selected Services Transactions with Unaffiliated Foreign Persons (Forms BE–20 and BE–22).

EFFECTIVE DATE: This final rule will be effective January 30, 2004.

FOR FURTHER INFORMATION CONTACT: Obie G. Whichard, Chief, International Investment Division (BE–50), Bureau of Economic Analysis, U.S. Department of Commerce, Washington, DC 20230; or via the Internet at *obie.whichard@bea.gov* (telephone (202) 606–9890).

SUPPLEMENTARY INFORMATION: In the September 23, 2003, **Federal Register**, (68 FR 55202–55204), BEA published a notice of proposed rulemaking setting forth reporting requirements for the BE–45, Quarterly Survey of Insurance Transactions by U.S. Insurance Companies with Foreign Persons. No comments on the proposed rule were received. Thus, the proposed rule is adopted without change.

The Bureau of Economic Analysis (BEA), U.S. Department of Commerce, will conduct the survey under the International Investment and Trade in Services Survey Act (22 U.S.C. 3101–3108). Section 4(a) of the Act (22 U.S.C. 3103(a)) provides that the President shall, to the extent he deems necessary and feasible, conduct a regular data collection program to secure current information related to international investment and trade in services and publish for the use of the general public and United States government agencies periodic, regular, and comprehensive statistical information collected pursuant to this subsection. In section 3 of Executive Order 11961, as amended by Executive Order 12518, the President delegated authority granted under the Act as concerns international trade in services to the Secretary of Commerce, who has redelegated it to BEA.

The major purposes of the survey are to monitor trade in insurance services, analyze its impact on the U.S. and foreign economies, compile and improve the U.S. economic accounts, support U.S. commercial policy on insurance services, conduct trade promotion, and improve the ability of U.S. businesses to identify and evaluate market opportunities.

The first survey conducted under this rule will cover transactions in the first quarter 2004. BEA will send the survey to potential respondents in March of 2004; responses will be due by May 30, 2004. The survey will update the data provided on the universe of insurance services transactions between U.S. insurance companies and foreign persons. Reporting is required from U.S. insurance companies whose covered transactions with foreign persons exceeded $8 million for the previous fiscal year, or are expected to exceed that amount during the current fiscal year. In addition, the reporting threshold for this survey is applied separately to each of the eight individual types of transactions covered by the survey rather than to the sum of the data for all eight types combined. Insurance companies meeting these criteria must supply data on the amount of their insurance transactions for each type of insurance category, disaggregated by country. U.S. insurance companies that do not meet the mandatory reporting requirements are requested to provide voluntary estimates of their covered insurance transactions.

The transactions covered by this survey are: reinsurance premiums received, reinsurance premiums paid, reinsurance losses paid, reinsurance losses recovered, primary insurance premiums received, primary insurance losses paid, auxiliary insurance services receipts, and auxiliary insurance services payments. (Auxiliary insurance services include agent's commissions, insurance brokering and agency services, insurance consulting services, evaluation and adjustment services, actuarial services, salvage administration services, and regulatory and monitoring services on indemnities and recovery services.)

Executive Order 12866

This final rule is not significant for purposes of E.O. 12866.

Executive Order 13132

This final rule does not contain policies with federalism implications as that term is defined in E.O. 13132.

Paperwork Reduction Act

The collection of information required in this final rule has been approved by the Office of Management and Budget under the Paperwork Reduction Act. Notwithstanding any other provisions of the law, no person is required to respond to, nor shall any person be subject to a penalty for failure to comply with, a collection of information subject to the requirements of the Paperwork Reduction Act unless that collection displays a currently valid OMB Control Number; such a Control Number (0608–0066) will be displayed.

The BE–45 survey is expected to result in the filing of approximately 210 reports on a quarterly basis, or 840 responses annually, and the average respondent burden for completing the survey is estimated at 8 hours. Thus, the total respondent burden of the survey is estimated at about 6,720 hours (840 responses times 8 hours average burden). The actual burden will vary from reporter to reporter, depending upon the number and variety of their insurance transactions and the ease of assembling the data. This estimate includes time for respondents to review the instructions, search existing data sources, gather and maintain the data needed, and complete and review the collection of information.

Comments regarding the burden estimate or any aspect of this collection of information should be addressed to: Director, Bureau of Economic Analysis (BE–1), U.S. Department of Commerce, Washington, DC 20230; or faxed (202–395–7245) or e-mailed *(pbugg@omb.eop.gov)* to the Office of Management and Budget, O.I.R.A., (Attention PRA Desk Officer for BEA).

Regulatory Flexibility Act

The Chief Counsel for Regulation, Department of Commerce, has certified to the Chief Counsel for Advocacy, Small Business Administration, under provisions of the Regulatory Flexibility Act (5 U.S.C. 605(b)), that this rule will not have a significant economic impact on a substantial number of small entities as that term is defined in the Regulatory Flexibility Act. The factual basis for the certification was published with the proposed rule. No comments were received regarding the economic impact of the rule. As a result, no final regulatory flexibility analysis was prepared.

List of Subjects in 15 CFR Part 801

Economic statistics, International transactions, Foreign trade, Penalties, Reporting and recordkeeping requirements.

Dated: December 10, 2003.

J. Steven Landefeld,

Director, Bureau of Economic Analysis.

■ For the reasons set forth in the preamble, BEA amends 15 CFR part 801, as follows:

PART 801—SURVEY OF INTERNATIONAL TRADE IN SERVICES BETWEEN U.S. AND FOREIGN PERSONS

■ 1. The authority citation for 15 CFR part 801 continues to read as follows:

Authority: 5 U.S.C. 301; 15 U.S.C. 4908; 22 U.S.C. 3101–3108; E.O. 11961, 3 CFR, 1977 Comp., p. 86 as amended by E.O. 12013, 3 CFR, 1977 Comp., p. 147, E.O. 12318, 3 CFR, 1981 Comp., p. 173, and E.O. 12518 3 CFR, 1985 Comp., p. 348.

■ 2. Section 801.9 is amended by adding new paragraph (c)(5) to read as follows:

§ 801.9 Reports required.

(c) Quarterly surveys. * * *

(5) BE–45, Quarterly Survey of Insurance Transactions by U.S. Insurance Companies with Foreign Persons:

(i) A BE–45, Quarterly Survey of Insurance Transactions by U.S. Insurance Companies with Foreign Persons, will be conducted covering the first quarter of the 2004 calendar year and every quarter thereafter.

(A) *Who must report—(1) Mandatory reporting.* Reports are required from each U.S. insurance company whose covered transactions with foreign persons exceeded $8 million for the previous fiscal year or are expected to exceed that amount during the current fiscal year. This threshold is applied separately to each of the eight individual types of transactions covered by the survey rather than to the sum of the data for all eight types combined. Quarterly reports for a year may be required retroactively when it is determined that the exemption level has been exceeded.

(2) *Voluntary reporting.* Reports are requested from each U.S. insurance company whose covered transactions with foreign persons were $8 million or less for the previous fiscal year and are not expected to exceed the $8 million amount during the current fiscal year. Provision of this information is voluntary. The estimates may be based on recall, without conducting a detailed records search.

(B) Any person receiving a BE–45 survey form from BEA must complete all relevant parts of the form and return the form to BEA. A person not subject to the mandatory reporting requirement in paragraph (c)(5)(i)(A) of this section and is not filing information on a voluntary basis must only complete the ''Determination of reporting status'' and the ''Certification'' sections of the survey. This requirement is necessary to ensure compliance with the reporting requirements and efficient administration of the survey by eliminating unnecessary followup contact.

(C) *Covered insurance transactions.* The transactions covered by this survey are: reinsurance premiums received, reinsurance premiums paid, reinsurance losses paid, reinsurance losses recovered, primary insurance premiums received, primary insurance losses paid, auxiliary insurance services receipts, and auxiliary insurance services payments. (Auxiliary insurance services include agent's commissions, insurance brokering and agency services, insurance consulting services, evaluation and adjustment services, actuarial services, salvage administration services, and regulatory and monitoring services on indemnities and recovery services.)

(ii) [Reserved]

* * * * *

[FR Doc. 03–32123 Filed 12–30–03; 8:45 am]

BILLING CODE 3510–06–P

DEPARTMENT OF COMMERCE

Bureau of Economic Analysis

15 CFR Part 801

[Docket No. 030910228–3319–02]

RIN 0691–AA54

International Services Surveys: BE–25, Quarterly Survey of Transactions With Unaffiliated Foreign Persons in Selected Services and in Intangible Assets

AGENCY: Bureau of Economic Analysis, Commerce.

ACTION: Final rule.

SUMMARY: This final rule amends regulations that set forth the reporting requirements for the BE–25, Quarterly Survey of Transactions with Unaffiliated Foreign Persons in Selected Services and in Intangible Assets.

The survey is mandatory and will be conducted under the International Investment and Trade in Services Survey Act. Data from the BE–25 survey are needed to monitor trade in services and intangible assets, analyze its impact on the U.S. and foreign economies, compile and improve the U.S. economic accounts, support U.S. commercial policy on financial services, conduct trade promotion, improve the ability of U.S. businesses to identify and evaluate market opportunities, and for other government and public uses.

The survey will cover some of the selected services presently covered by the BE–22, Annual Survey of Selected Services Transactions with Unaffiliated Foreign Persons. The selected services covered by the BE–25 survey will be removed from the BE–22 survey after the survey for 2003 is conducted. The BE–22 survey will continue to be conducted for those services that were not moved to the BE–25 survey. The BE–25 survey will also cover construction, engineering, architectural, and surveying services presently covered by the BE–47, Annual Survey of Construction, Engineering, Architectural, and Mining Services Provided by U.S. Firms to Unaffiliated Foreign Persons, and will cover the same transactions in intangible assets presently covered by the BE–93, Annual Survey of Royalties, License Fees, and Other Receipts and Payments for Intangible Rights Between U.S. and Unaffiliated Foreign Persons; both of these annual surveys will be discontinued, following a final data collection for 2003.

EFFECTIVE DATE: This final rule will be effective January 30, 2004.

FOR FURTHER INFORMATION CONTACT: Obie G. Whichard, Chief, International Investment Division (BE–50), Bureau of Economic Analysis, U.S. Department of Commerce, Washington, DC 20230; or via the Internet at *obie.whichard@bea.gov* (telephone (202) 606–9890).

SUPPLEMENTARY INFORMATION: In the September 23, 2003, **Federal Register**, (68 FR 55204–55206), BEA published a notice of proposed rulemaking setting forth reporting requirements for the BE–25, Quarterly Survey of Transactions with Unaffiliated Foreign Persons in Selected Services and in Intangible Assets. No comments on the proposed rule were received. Thus, the proposed rule is adopted without change.

The Bureau of Economic Analysis (BEA), U.S. Department of Commerce, will conduct the survey under the International Investment and Trade in Services Survey Act (22 U.S.C. 3101–3108). Section 4(a) of the Act (22 U.S.C. 3103(a)) provides that the President shall, to the extent he deems necessary and feasible, conduct a regular data collection program to secure current information related to international investment and trade in services and publish for the use of the general public and United States Government agencies periodic, regular, and comprehensive statistical information collected pursuant to this subsection. In section 3 of Executive Order 11961, as amended by Executive Order 12518, the President delegated authority granted under the Act as concerns international trade in services to the Secretary of Commerce, who has redelegated it to BEA.

The major purposes of the survey are to monitor trade in services and in intangible assets, analyze the impact of this trade on the U.S. and foreign economies, compile and improve the U.S. economic accounts, support U.S. commercial policy on services and intangible assets, conduct trade promotion, and improve the ability of U.S. businesses to identify and evaluate market opportunities.

The BE–25 survey is mandatory and will be conducted under the International Investment and Trade in Services Survey Act. The first survey conducted under this rule will cover transactions in the first quarter of 2004. BEA will send the survey to potential respondents in March of 2004; responses will be due by May 15, 2004. The survey will update the data provided on the universe of transactions between U.S. and unaffiliated foreign persons in selected services and in intangible assets. Reporting is required from U.S. persons whose sales of covered services to unaffiliated foreign persons exceeded $6 million for the previous fiscal year or are expected to exceed that amount during the current fiscal year, or whose purchases of covered services from unaffiliated foreign persons exceeded $4 million for the previous fiscal year or are expected to exceed that amount during the current fiscal year. U.S. persons meeting any of these criteria must supply data on the amount of their sales or purchases for each type of covered service, disaggregated by country. U.S. persons that do not meet the mandatory reporting requirements are requested to provide voluntary estimates of their total sales and purchases of each type of covered service or intangible asset.

The BE–25 survey will cover some of the selected services presently covered by the BE–22, Annual Survey of Selected Services Transactions with Unaffiliated Foreign Persons. It will also cover construction, engineering, architectural, and surveying services presently covered by the BE–47, Annual Survey of Construction, Engineering, Architectural, and Mining Services Provided by U.S. Firms to Unaffiliated Foreign Persons, and will cover the same transactions in intangible rights presently covered by the BE–93, Annual Survey of Royalties, License Fees, and Other Receipts and Payments for Intangible Rights Between U.S. and Unaffiliated Foreign Persons; both of these annual surveys will be discontinued, following a final data collection for 2003.

Executive Order 12866

This final rule is not significant for purposes of E.O. 12866.

Executive Order 13132

This final rule does not contain policies with federalism implications as that term is defined in E.O. 13132.

Paperwork Reduction Act

The collection of information required in this final rule has been approved by the Office of Management and Budget under the Paperwork Reduction Act. Notwithstanding any other provisions of the law, no person is required to respond to, nor shall any person be subject to a penalty for failure to comply with, a collection of information subject to the requirements of the Paperwork Reduction Act unless that collection displays a currently valid OMB Control Number; such a Control Number (0608–0067) will be displayed.

The BE–25 survey is expected to result in the filing of reports containing mandatory data from about 700 respondents on a quarterly basis, or

2,800 responses annually. The average burden for completing the BE–25 is estimated to be 16 hours. Thus, the total respondent burden of the survey is estimated at 44,800 hours (2,800 responses times 16 hours average burden). The actual burden will vary from reporter to reporter, depending upon the number and variety of their covered services transactions and the ease of assembling the data. This estimate includes time for reviewing instructions, searching existing data sources, gathering and maintaining the data needed, and completing and reviewing the collection of information.

Comments regarding the burden estimate or any aspect of this collection of information should be addressed to: Director, Bureau of Economic Analysis (BE–1), U.S. Department of Commerce, Washington, DC 20230, and either faxed (202–395–7245) or e-mailed (*pbugg@omb.eop.gov*) to the Office of Management and Budget, O.I.R.A. (Attention PRA Desk Officer for BEA).

Regulatory Flexibility Act

The Chief Counsel for Regulation, Department of Commerce, has certified to the Chief Counsel for Advocacy, Small Business Administration, under provisions of the Regulatory Flexibility Act (5 U.S.C. 605(b)), that this rule will not have a significant economic impact on a substantial number of small entities as that term is defined in the Regulatory Flexibility Act. The factual basis for the certification was published with the proposed rule. No comments were received regarding the economic impact of the rule. As a result, no final regulatory flexibility analysis was prepared.

List of Subjects in 15 CFR Part 801

International transactions, Economic statistics, Foreign trade, Penalties, Reporting and recordkeeping requirements.

Dated: December 10, 2003.

J. Steven Landefeld,

Director, Bureau of Economic Analysis.

■ For the reasons set forth in the preamble, BEA amends 15 CFR part 801, as follows:

PART 801—SURVEY OF INTERNATIONAL TRADE IN SERVICES BETWEEN U.S. AND FOREIGN PERSONS

■ 1. The authority citation for 15 CFR part 801 continues to read as follows:

Authority: 5 U.S.C. 301; 15 U.S.C. 4908; 22 U.S.C. 3101–3108; E.O. 11961, 3 CFR, 1977 Comp., p. 86 as amended by E.O. 12013, 3 CFR, 1977 Comp., p. 147, E.O. 12318, 3 CFR, 1981 Comp., p. 173, and E.O. 12518 3 CFR, 1985 Comp., p. 348.

■ 2. Section 801.9 is amended by adding new paragraph (c)(6) to read as follows:

§ 801.9 Reports required.

* * * * *

(c) Quarterly surveys. * * *

(6) BE–25, Quarterly Survey of Transactions with Unaffiliated Foreign Persons in Selected Services and in Intangible Assets:

(i) A BE–25, Quarterly Survey of Transactions with Unaffiliated Foreign Persons in Selected Services and in Intangible Assets, will be conducted covering the first quarter of the 2004 calendar year and every quarter thereafter.

(A) *Who must report*—(1) *Mandatory reporting*. Reports are required from each U.S. person that: (a) Had sales of covered services to unaffiliated foreign persons that exceeded $6 million for the previous fiscal year or are expected to exceed that amount during the current fiscal year; or (b) had purchases of covered services from unaffiliated foreign persons that exceeded $4 million for the previous fiscal year or are expected to exceed that amount during the current fiscal year. Because the thresholds are applied separately to sales and purchases, the mandatory reporting requirement may apply only to sales, only to purchases, or to both sales and purchases. Quarterly reports for a year may be required retroactively when it is determined that the exemption level has been exceeded.

(2) *Voluntary reporting*. Reports are requested from each U.S. person that had sales of covered services to unaffiliated foreign persons that were $6 million or less for the previous fiscal year and are expected to be less than or equal to that amount during the current fiscal year, or had purchases of covered services from unaffiliated foreign persons that were $4 million or less for the previous fiscal year and are expected to be less than or equal to that amount during the current fiscal year. Provision of this information is voluntary. The estimates may be based on recall, without conducting a detailed records search. Because these thresholds apply separately to sales and purchases, voluntary reporting may apply only to sales, only to purchases, or to both.

(B) Any person receiving a BE–25 survey form from BEA must complete all relevant parts of the form and return the form to BEA. A person that is not subject to the mandatory reporting requirement in paragraph (c)(6)(i)(A) of this section and is not filing information on a voluntary basis must only complete the ''Determination of reporting status'' and the ''Certification'' sections of the survey. This requirement is necessary to ensure compliance with the reporting requirements and efficient administration of the survey by eliminating unnecessary followup contact.

(C) *Covered services and intangible assets*. The services covered by this survey are: Accounting, auditing, and bookkeeping services; computer and data processing services; construction services; foreign expenses related to construction projects; data base and other information services; engineering, architectural, and surveying services; industrial engineering services; industrial-type maintenance, installation, alteration, and training services; legal services; management, consulting, and public relations services; operational leasing services; research, development, and testing services; and telecommunication services. The intangible assets covered by this survey are rights related to: industrial processes and products; books, compact discs, audio tapes and other copyrighted material and intellectual property; trademarks, brand names, and signatures; performances and events pre-recorded on motion picture film and television tape, including digital recording; broadcast and recording of live performances and events; general use computer software; business format franchising fees; and other intangible assets, including indefeasible rights of users.

(ii) [Reserved]

* * * * *

[FR Doc. 03–32124 Filed 12–30–03; 8:45 am]

BILLING CODE 3510–06–P

DEPARTMENT OF HEALTH AND HUMAN SERVICES

Food and Drug Administration

21 CFR Part 172

[Docket No. 2002F–0220]

Food Additives Permitted for Direct Addition to Food for Human Consumption; Acesulfame Potassium

AGENCY: Food and Drug Administration, HHS.

ACTION: Final rule.

SUMMARY: The Food and Drug Administration (FDA) is amending the food additive regulations to provide for the safe use of acesulfame potassium (ACK) as a general-purpose sweetener and flavor enhancer in food, not including meat and poultry. This action

is in response to a food additive petition filed by Nutrinova, Inc. It will simplify the existing regulations by replacing all of the currently listed uses of ACK with a single-use category for food.

DATES: This rule is effective December 31, 2003. Submit written or electronic objections and requests for a hearing by January 30, 2004.

ADDRESSES: Submit written objections and requests for a hearing to the Division of Dockets Management (HFA–305), Food and Drug Administration, 5630 Fishers Lane, rm. 1061, Rockville, MD 20852. Submit electronic objections at *http://www.fda.gov/dockets/ecomments*.

FOR FURTHER INFORMATION CONTACT: Blondell Anderson, Center for Food Safety and Applied Nutrition (HFS–265), Food and Drug Administration, 5100 Paint Branch Pkwy., College Park, MD 20740–3835, 202–418–3106.

SUPPLEMENTARY INFORMATION:

I. Background

In a notice published in the **Federal Register** on May 20, 2002 (67 FR 35552), FDA announced that Nutrinova, Inc., 285 Davidson Ave., suite 102, Somerset, NJ 08873, had filed a food additive petition (FAP 2A4735). The petition proposed to amend § 172.800 *Acesulfame potassium* (21 CFR 172.800) to provide for the safe use of ACK as a general-purpose sweetener and flavor enhancer.

ACK is currently approved under § 172.800 for use in 12 food categories at levels determined by current good manufacturing practice. The existing regulation has resulted from the approval of seven food additive petitions (FAPs). The practical effect of the amendment requested in the current petition would be to broaden the regulation to include any additional food category not allowed by the current regulation, with the exception, as discussed in the following paragraphs, of meat and poultry, and to replace the 12 currently listed uses of ACK with a single-use category for food.

The acceptable daily intake (ADI) of 15 milligrams per kilogram body weight per day (mg/kg bw/d) or 900 mg per person per day (mg/p/d) was established for ACK as a result of FDA's review of FAP 2A3659 (53 FR 28379, July 28, 1988), which resulted in the agency's initial approval of ACK in several food categories. The ADI is the level of consumption that has been determined to be safe for human consumption every day over an entire lifetime. The present petition does not contain any new information that would cause FDA to alter this previously determined ADI for ACK.

FDA's review of the petitions submitted subsequent to FAP 2A3659 involved primarily the following factors: (1) An assessment of the estimated exposure from each additional use; and (2) a determination of whether the cumulative estimated exposure, including the newly requested use, would cause the ADI for ACK to be exceeded over a lifetime by individuals who consume ACK at high levels. In its evaluation of ACK for use in nonalcoholic beverages, including beverage bases, FDA also assessed the safety from exposure to acetoacetamide-N-sulfonic acid (AAS) and acetoacetamide (AAA), the two principal hydrolysis products of ACK (63 FR 36344 at 36346 to 36355, July 6, 1998).

Although the functionality of ACK was addressed in earlier FAPs, in the current petition, Nutrinova, Inc., provided the results from taste panel studies demonstrating the sweetness profile of ACK as a function of concentration in a variety of foods. These data demonstrate that ACK can be used alone or in blends with other intense sweeteners or bulk sweeteners (e.g., sucrose) at self-limiting levels depending on the food application (Ref. 1).

II. Determination of Safety

Under the general safety standard provisions of section 409(c)(3)(A) of the Federal Food, Drug, and Cosmetic Act (the act) (21 U.S.C. 348(c)(3)(A)), a food additive cannot be approved for a particular use unless a fair evaluation of the data available to FDA establishes that the additive is safe for that use. FDA's food additive regulations (21 CFR 170.3(i)) define safe as a ''reasonable certainty in the minds of competent scientists that the substance is not harmful under the intended conditions of use.''

The food additives anticancer, or Delaney, clause (section 409(c)(3)(A) of the act) further provides that no food additive shall be deemed to be safe if it is found to induce cancer when ingested by man or animal. Importantly, however, the Delaney clause applies to the additive itself and not to constituents of the additive. Thus, where an additive has not been shown to cause cancer, even though it contains a carcinogenic impurity, the additive is not subject to the legal effect of the Delaney clause. Rather, the additive is properly evaluated under the general safety standard using risk assessment procedures to determine whether there is a reasonable certainty that no harm will result from the proposed use of the additive (*Scott* v. *FDA*, 728 F.2d 322 (6th Cir. 1984)).

III. Evaluation of Safety for the Petitioned Uses of the Food Additive

To determine whether ACK can be safely used as a general-purpose sweetener and flavor enhancer, FDA focused its evaluation on whether human exposure to ACK from these uses would exceed the ADI of 15 mg/kg bw/d, and on the potential health risk from exposure to the primary hydrolysis products, AAS and AAA, and the impurity, methylene chloride.

A. Exposure to ACK, AAS, and AAA

FDA has determined the cumulative estimated daily intake (CEDI) for ACK from its use as a general-purpose sweetener and flavor enhancer in food for eaters-only at the 90th percentile intake to be 313 mg/p/d (Refs. 2 and 3). This CEDI is based on the following factors: (1) The amount of ACK that may be used in the currently regulated food categories and (2) the maximum use level of ACK in other representative food categories in which the sweetener may be used. FDA concludes that the updated CEDI for ACK is well below the ADI (900 mg/p/d). FDA has determined that the updated CEDIs for AAS and AAA are 250 micrograms per person per day (µg/p/day) and 0.36 µg/p/day, respectively (Refs. 1 and 3). These hydrolysis products are formed only under extreme conditions of temperature and/or pH. The agency has determined that the increase in exposure to AAS and AAA, due to the additional uses, is negligible and does not pose any safety concerns (Refs. 3, 4, and 5).

B. Methylene Chloride

Methylene chloride, a carcinogenic chemical, is a potential impurity in ACK resulting from its use as a solvent in the initial manufacturing step of the sweetener. Data previously submitted in FAP 0A4212 show that methylene chloride could not be detected in the final product at a limit of detection (LOD) of 40 parts per billion (ppb) as discussed in the July 6, 1998, final rule (63 FR 36344 at 36346). In the past, FDA has assumed that methylene chloride is present in ACK at the LOD of 40 ppb (worst-case scenario) and has evaluated its safety by performing a risk assessment for methylene chloride based on this level. No new information has been received to change FDA's previous risk assessment for methylene chloride. Moreover, FDA does not expect that methylene chloride will be present in ACK due to the following

factors: (1) The multi-step purification process used in the manufacture of ACK and (2) the volatility of methylene chloride (Ref. 1).

IV. Conclusion

FDA has reviewed the information available in its files on ACK and its hydrolysis products, as well as the current petition, and concludes that there is a reasonable certainty that no harm will result from the use of ACK as a general-purpose sweetener and flavor enhancer in foods. However, in accordance with a memorandum of understanding between the Food Safety and Inspection Service (FSIS), United States Department of Agriculture, and FDA (65 FR 51758, August 25, 2000), a restriction from use ''in meat and poultry'' is included in the ACK regulation. This restriction is applied when the petitioner does not specify that the food additive is intended for such use. At this time, FSIS has not evaluated data on the suitability of use of ACK in meat or poultry. Therefore, FDA concludes that the food additive regulations should be amended as set forth in this document.

In accordance with § 171.1(h) (21 CFR 171.1(h)), the petition and the documents that FDA considered and relied upon in reaching its decision to approve the petition are available for inspection at the Center for Food Safety and Applied Nutrition by appointment with the information contact person. As provided in § 171.1(h), FDA will delete from the documents any materials that are not available for public disclosure before making the documents available for inspection.

V. Environmental Effects

FDA has carefully considered the potential environmental effects of this action. FDA concluded that the action will not have a significant impact on the human environment, and that an environmental impact statement is not required. FDA's finding of no significant impact and the evidence supporting that finding, contained in an environmental assessment, may be seen in the Division of Dockets Management (see **ADDRESSES**) between 9 a.m. and 4 p.m., Monday through Friday.

VI. Paperwork Reduction Act of 1995

This final rule contains no collection of information. Therefore, clearance by the Office of Management and Budget under the Paperwork Reduction Act of 1995 is not required.

VII. Objections

Any person who will be adversely affected by this regulation may at any time file with the Division of Dockets Management (see **ADDRESSES**) written or electronic objections on or before January 30, 2004. Each objection shall be separately numbered, and each numbered objection shall specify with particularity the provisions of the regulation to which objection is made and the grounds for the objection. Each numbered objection on which a hearing is requested shall specifically so state. Failure to request a hearing for any particular objection shall constitute a waiver of the right to a hearing on that objection. Each numbered objection for which a hearing is requested shall include a detailed description and analysis of the specific factual information intended to be presented in support of the objection in the event that a hearing is held. Failure to include such a description and analysis for any particular objection shall constitute a waiver of the right to a hearing on the objection. Three copies of all documents shall be submitted and shall be identified with the docket number found in brackets in the heading of this document. Any objections received in response to the regulation may be seen in the Division of Dockets Management (see **ADDRESSES**) between 9 a.m. and 4 p.m., Monday through Friday.

VIII. References

The following references have been placed on display in the Division of Dockets Management (see **ADDRESSES**) and may be seen by interested persons between 9 a.m. and 4 p.m., Monday through Friday.

1. Memorandum from D. Robie, Division of Petition Review, Chemistry Review Group, to B. Anderson, Division of Petition Review, Regulatory Group II, October 7, 2002, and addendum memorandum from S. E. Carberry, Division of Petition Review, Chemistry Review Group, to B. Anderson, Division of Petition Review, Regulatory Group I, August 28, 2003.

2. Memorandum from D. Robie, Division of Petition Review, Chemistry Review Group to B. Anderson, Division of Petition Review, Regulatory Group II, March 19, 2003, and addendum memorandum from S. E. Carberry, Division of Petition Review, Chemistry Review Group, to B. Anderson, Division of Petition Review, Regulatory Group I, August 28, 2003.

3. Memorandum to the file, July 7, 2003.

4. Memorandum from M. Bleiberg, Division of Petition Review, Toxicology Review Group I, to B. Anderson, Division of Petition Review, Regulatory Group I, December 18, 2002.

5. Memorandum from M. Bleiberg, Division of Petition Review, Toxicology Review Group I, to B. Anderson, Division of Petition Review, Regulatory Group II, April 2, 2003.

List of Subjects in 21 CFR Part 172

Food additives, Reporting and recordkeeping requirements.

■ Therefore, under the Federal Food, Drug, and Cosmetic Act and under authority delegated to the Commissioner of Food and Drugs, 21 CFR part 172 is amended as follows:

PART 172—FOOD ADDITIVES PERMITTED FOR DIRECT ADDITION TO FOOD FOR HUMAN CONSUMPTION

■ 1. The authority citation for 21 CFR Part 172 continues to read as follows:

Authority: 21 U.S.C. 321, 341, 342, 348, 371, 379e.

■ 2. Section 172.800 is amended by revising the introductory paragraph and paragraph (c), and by removing paragraphs (d) and (e) to read as follows:

§ 172.800 Acesulfame potassium.

Acesulfame potassium (CAS Reg. No. 55589–62–3), also known as acesulfame K, may be safely used as a general-purpose sweetener and flavor enhancer in foods generally, except in meat and poultry, in accordance with current good manufacturing practice and in an amount not to exceed that reasonably required to accomplish the intended technical effect in foods for which standards of identity established under section 401 of the Federal Food, Drug, and Cosmetic Act do not preclude such use, under the following conditions:

(a) * * *

(b) * * *

(c) If the food containing the additive is represented to be for special dietary uses, it shall be labeled in compliance with part 105 of this chapter.

Dated: December 17, 2003.

Jeffrey Shuren,

Assistant Commissioner for Policy.

[FR Doc. 03–32101 Filed 12–30–03; 8:45 am]

BILLING CODE 4160–01–S

DEPARTMENT OF HEALTH AND HUMAN SERVICES

Food and Drug Administration

21 CFR Part 358

[Docket No. 2002N–0058]

RIN 0910–AA01

Pediculicide Drug Products for Over-the-Counter Human Use; Amendment of Final Monograph

AGENCY: Food and Drug Administration, HHS.

ACTION: Final rule.

SUMMARY: The Food and Drug Administration (FDA) is issuing a final rule amending the final monograph (FM) for over-the-counter (OTC) pediculicide drug products to revise labeling for the statement of identity, warnings, directions, and other required statements. Pediculicide drug products are used for the treatment of head, pubic (crab), and body lice. FDA is issuing this final rule as part of its ongoing review of OTC drug products after considering public comment on its proposed regulation and all relevant data and information that have come to the agency's attention.

DATES: *Effective Date*: This final rule is effective June 30, 2005.

Compliance Dates: The compliance date for OTC pediculicide drug products with annual sales less than $25,000 is January 3, 2006. The compliance date for all other OTC pediculicide drug products is June 30, 2005.

FOR FURTHER INFORMATION CONTACT: Michael T. Benson, Center for Drug Evaluation and Research (HFD–560), Food and Drug Administration, 5600 Fishers Lane, Rockville, MD 20857, 301–827–2222.

SUPPLEMENTARY INFORMATION:

I. Background

In the **Federal Register** of December 14, 1993 (58 FR 65452), FDA published a final rule in the form of a FM in part 358 (21 CFR part 358, subpart G) establishing conditions under which OTC pediculicide drug products are generally recognized as safe and effective. The effective date of the final rule was December 14, 1994. Since that time, FDA has determined that labeling in the statement of identity, warnings, directions, and certain other required statements in the pediculicide monograph should be amended.

In the **Federal Register** of March 17, 1999 (64 FR 13254), FDA published a final rule that established a standardized format and standardized content requirements for OTC drug product labeling in § 201.66 (21 CFR 201.66). In that same final rule (64 FR 13254 at 13296), FDA amended the FM for OTC pediculicide drug products and removed the requirement in § 358.650(d)(1) that the direction ''Important: Read warnings before using'' be printed in all capital letters. The sentence now needs to appear in boldface type with only the word ''Important'' and the first letter in the word ''Read'' capitalized.

In the **Federal Register** of May 10, 2002 (67 FR 31739), FDA published a proposed rule to amend the FM for OTC pediculicide drug products to revise labeling for the statement of identity, warnings, directions, and other required statements to increase the probability of treatment success with these products. In response to that proposal, one OTC trade association and a professor of clinical toxicology submitted comments, which FDA is responding to in this document.

II. The Agency's Conclusion on the Comments

A. Comments in Agreement with the Proposed Rule

(Comment 1) One comment agreed completely with the proposed recommended label changes. Another comment agreed with the following proposed changes:

- New statement of identity (i.e., remove ''pediculicide'' and just state ''Lice treatment'' by itself);
- Simplified indications under the heading ''Uses'';
- Formatting changes using subheadings (i.e., ''Do not use,'' ''Ask a doctor before use,'' ''When using this product,'' and ''Stop use and ask adoctor if'');
- Bulleted statements under each subheading.

B. Comments with Labeling Recommendations

(Comment 2) One comment contended that the proposed additional directions are too extensive to fit on pediculicide product carton labels. The comment stated that lengthy, detailed directions for environmental control of lice and combing the hair and ''other information'' would be more appropriately provided in a package insert than on a carton label. The comment agreed that essential treatment directions should be on the outer label, but that consumers do not need to be able to read the entire detailed instructions at the point of purchase. The comment recommended that the outer package have a statement directing consumers to an insert for more complete directions. The comment suggested ''See brochure inside for other important information to help get rid of lice.'' The comment also added that a statement about use of a comb should be optional on the outer label and should instruct consumers to see the package insert for complete directions and could incorporate a reference to a comb provided in the package.

FDA considered the length of the additional directions and provided in the May 10, 2002 proposal (§ 358.650(e)) that the detailed information required under the heading ''Other information'' may appear in a package insert. If that occurs, the ''Other information'' section on the outer label only needs to include a statement that refers to the package insert for additional information. The information about use of a comb is part of the essential treatment directions (§ 358.650(d)(5)) and, thus, needs to appear on the outer label. If the product does not have a comb with it, consumers would need to know at the point of purchase that they may also need to purchase a special comb to use with the product. FDA is clarifying the introductory paragraph in § 358.650(e) to read that if a package insert is used, the ''Other information'' section on the outer label shall include a statement referring to the package insert for additional information.

(Comment 3) One comment recommended that the directions proposed in § 358.650(d)(4)(i) or (d)(4)(ii), (d)(6), (d)(7), and (d)(8) appear both on the outer package label and in the package insert. The information includes the following provisions:

- Application directions for shampoo or nonshampoo products,
- Directions for a followup treatment,
- Instructions to see doctor if the infestation continues,
- Instruction to consult a doctor for children under 2 years of age.

FDA agrees with the comment. Directions that appear on the outer package label in accordance with § 201.66(c) may be restated in a package insert.

(Comment 4) One comment disagreed with the agency's change from 2 weeks to 4 weeks for the time items that cannot be washed should be sealed in a plastic bag(§ 358.650(e)(1)). The comment stated that FDA gave no rationale for doubling the time and pediculicide manufacturers know of no evidence showing more than 2 weeks is needed to prevent reinfestation.

FDA initiated the change for sealing items that cannot be washed in a plastic bag from 2 to 4 weeks for greater assurance of preventing head lice

reinfestation. In the last few years, pediculosis fact sheets have recommended longer sealing times. One sheet (Ref. 1) instructs to ''pack the items in a sealed plastic bag for a minimum of two weeks.'' Another sheet (Ref. 2) instructs to ''pack non-washable items in a sealed plastic bag for 21 days to eliminate the risk from dormant nits.'' Based on these recent recommendations, the agency has determined that a 4-week time period will give greater assurance of preventing head lice reinfestation.

(Comment 5) One comment stated that the amended final monograph should allow for special instructions specific to particular products to enhance product-specific directions. The comment gave examples of ''shake the product well before use,'' ''apply to dry hair,'' or conditions for storage. The comment requested that the monograph state that ''a reasonable degree of flexibility will be given to companies choosing to amplify the directions appropriately.''

The agency disagrees with the need to include the comment's suggested statements in the FM for OTC pediculicide drug products. That monograph does not prohibit manufacturers from including statements such as ''shake well before using'' or information about conditions for storage in the product's labeling. The direction under the heading ''Treat'' for shampoo and nonshampoo products in § 358.650(d)(4)(i) and (d)(4)(ii) imply that the hair is dry before the product is first applied. FDA is amending these sections to give the option of adding the word ''dry'' before ''hair''.

C. Will Labeling for New Drug Application (NDA) Products be Revised at the Same Time as the Monograph Products?

(Comment 6) One comment asked FDA to coordinate the revised NDA labeling for OTC pediculicide drug products marketed under NDAs and under the OTC drug monograph. The comment stated that the implementation for all products should occur at the same time.

FDA strives for consistency in labeling of similar products that are marketed OTC under an OTC drug monograph or an NDA. The effective date for the amended labeling in this final rule is 18 months after the date of publication in the **Federal Register**. The agency intends to notify NDA holders to make changes in labeling consistent with this final rule and believes these changes can be completed by the effective date.

III. The Agency's Final Conclusions

A. Summary of Major Labeling Changes

Based on the available evidence, FDA is issuing a final rule amending the FM for OTC pediculicide drug products to make the following changes:

• *Statement of Identity*. We revised the *''Statement of identity''* to read ''lice treatment'' and eliminated the term ''pediculicide.''

• *Warnings*.

(1) We shortened some warnings and stated all warnings in the new format in § 201.66 using the subheadings ''Do not use'', ''Ask a doctor before use if you are'', ''When using this product'', and ''Stop use and ask a doctor if''.

(2) We revised one warning for greater clarity by adding a few words after the statement ''See a doctor'' to read ''Do not use • near eyes • inside nose, mouth, or vagina • on lice in eyebrows or eyelashes. See a doctor if lice are present in these areas.''

• *Directions*. We added the following:

(1) Two introductory statements entitled ''Important: Read warnings before use''[statement shall appear first and in bold type] and ''adults and children 2 years and over'' [in bold type];

(2) Headings entitled ''Inspect'', ''Treat'', and ''Remove lice and their eggs (nits)'';

(3) ''Dry'' as an optional word before ''hair'' in the first sentence in the heading for ''Treat'' for shampoo and nonshampoo products.

• *Other information*.

(1) We allow information to appear in a package insert.

(2) We expanded the time for sealing items in a plastic bag from 2 to 4 weeks.

(3) We added the statement ''• vacuum all carpets, mattresses, upholstered furniture, and car seats that may have been used by affected people''.

B. Statement About Warnings

Mandating warnings in an OTC drug monograph does not require a finding that any or all of the OTC drug products covered by the monograph actually caused an adverse event, and FDA does not so find. Nor does FDA's requirement of warnings repudiate the prior OTC drug monographs and monograph rulemakings under which the affected drug products have been lawfully marketed. Rather, as a consumer protection agency, FDA has determined that warnings are necessary to ensure that these OTC drug products continue to be safe and effective for their labeled indications under ordinary conditions of use as those terms are defined in the Federal Food, Drug, and Cosmetic Act. This judgment balances the benefits of these drug products against their potential risks (see 21 CFR 330.10(a)).

FDA's decision to act in this instance need not meet the standard of proof required to prevail in a private tort action (*Glastetter* v. *Novartis Pharmaceuticals Corp.*, 252 F.3d 986, 991 (8th Cir. 2001)). To mandate warnings, or take similar regulatory action, FDA need not show, nor do we allege, actual causation. For an expanded discussion of case law supporting FDA's authority to require such warnings, see Labeling of Diphenhydramine-Containing Drug Products for Over-the-Counter Human Use final rule (67 FR 72555, December 6, 2002).

C. Marketing Conditions

No OTC pediculicide drug product that is marketed under part 358, subpart G, and that contains a nonmonograph condition may be initially introduced or initially delivered for introduction into interstate commerce unless it is the subject of an approved NDA:

• 24 months after the date of publication of this final rule in the **Federal Register** for products with sales less than $25,000;

• 18 months after the date of publication in the **Federal Register** for all other such drug products.

Further, any OTC drug product subject to this final rule that is repackaged or relabeled after the compliance dates in the final rule must be in compliance with part 358, subpart G regardless of the date the product was initially introduced or initially delivered for introduction into interstate commerce. Manufacturers are encouraged to comply voluntarily as soon as possible.

IV. Analysis of Impacts

FDA has examined the impacts of the final rule under Executive Order 12866 and the Regulatory Flexibility Act (5 U.S.C. 601–612), and the Unfunded Mandates Reform Act of 1995 (2 U.S.C. 1501 *et seq.*). Executive Order 12866 directs agencies to assess all costs and benefits of available regulatory alternatives and, when regulation is necessary, to select regulatory approaches that maximize net benefits (including potential economic, environmental, public health and safety, and other advantages; distributive impacts; and equity). Under the Regulatory Flexibility Act, if a rule has a significant impact on a substantial number of small entities, an agency must analyze regulatory options that would minimize any significant impact of the rule on small entities. Section

202(a) of the Unfunded Mandates Reform Act of 1995 requires that agencies prepare a written statement of anticipated costs and benefits before proposing any rule that may result in an expenditure in any 1 year by State, local, and tribal governments, in the aggregate, or by the private sector, of $100 million (adjusted annually for inflation).

FDA concludes that this final rule is consistent with the principles set out in Executive Order 12866 and in these two statutes. The final rule is not a significant regulatory action as defined by the Executive order and so is not subject to review under the Executive order. As discussed in this section, FDA has determined that this final rule will not have a significant economic impact on a substantial number of small entities. The Unfunded Mandates Reform Act of 1995 does not require FDA to prepare a statement of costs and benefits for this final rule, because the final rule is not expected to result in any 1-year expenditure that would exceed $100 million adjusted for inflation. The current inflation adjusted statutory threshold is about $110 million.

The purpose of this final rule is to revise and improve the statement of identity, warnings, directions, and other required labeling statements for OTC pediculicide drug products. The revised labeling provides more detailed information on the proper use of the product and should improve consumers' self-use.

The final rule requires relabeling of OTC pediculicide drug products containing pyrethrum extract with piperonyl butoxide. FDA's drug listing system identifies about 23 manufacturers and 36 marketers of approximately 75 stockkeeping units (SKU) (individual products, packages, and sizes) of OTC pediculicide drug products. There may be a few additional marketers and products that are not identified in the sources FDA reviewed.

FDA does not believe that manufacturers would need to increase the package size to add the additional labeling information. Almost all of these products are marketed in an outer carton which should have adequate space for the additional information. In addition, manufacturers may include the ''Other information'' section of the labeling in a package insert, which generally has a nominal cost. Assuming that there are about 75 affected OTC SKUs in the marketplace, FDA estimates (based on information provided by OTC drug manufacturers) that the rule would impose total one-time compliance costs on industry for relabeling of about $3,000 to $4,000 per SKU, for a total cost of $225,000 to $300,000.

FDA believes the actual cost could be lower for several reasons. First, most of the labeling changes will be made by private label small manufacturers that tend to use simpler and less expensive labeling.

Second, FDA is providing a period of 18 months (24 months for products with annual sales less than $25,000) for manufacturers to implement the new labeling. Thus, manufacturers should be able to use up existing labeling stocks and to make the labeling changes in the normal course of business. Further, manufacturers will not incur any expenses determining how to state the product's labeling because the final rule provides that information. The final rule does not require any new reporting and recordkeeping activities. Therefore, no additional professional skills are needed.

FDA considered but rejected several labeling alternatives: (1) A shorter or longer implementation period, and (2) an exemption from coverage for small entities. While the agency believes that consumers would benefit from having this new labeling in place as soon as possible, the agency also acknowledges that a shorter implementation period could significantly increase the compliance costs and these costs could be passed through to consumers. A longer time period would unnecessarily delay the benefit of new labeling to consumers who self-medicate with these drug products. The agency rejects an exemption for small entities because the new labeling information is also needed by consumers who purchase products marketed by those entities. However, a longer compliance date (24 months) is being provided for products with annual sales less than $25,000.

OTC pediculicide drug products are not the sole products produced by manufacturers affected by this final rule. FDA believes that the incremental costs of this final rule will be less than 1 percent of any of the manufacturer's total sales. Therefore, FDA certifies that this final rule will not have a significant economic impact on a substantial number of small entities. No further analysis is required under the Regulatory Flexibility Act (5 U.S.C. 605(b)).

V. Paperwork Reduction Act of 1995

FDA concludes that the labeling requirements in this document are not subject to review by the Office of Management and Budget because they do not constitute a ''collection of information'' under the Paperwork Reduction Act of 1995 (44 U.S.C. 3501 *et seq.*). Rather, the statement of identity, warnings, directions, and other information are a ''public disclosure of information originally supplied by the Federal government to the recipient for the purpose of disclosure to the public'' (5 CFR 1320.3(c)(2)).

VI. Environmental Impact

FDA has determined under 21 CFR 25.31(a) that this action is of a type that does not individually or cumulatively have a significant effect on the human environment. Therefore, neither an environmental assessment nor an environmental impact statement is required.

VII. Federalism

FDA has analyzed this final rule in accordance with the principles set forth in Executive Order 13132. FDA has determined that the rule does not contain policies that have substantial direct effects on the States, on the relationship between the National Government and the States, or on the distribution of power and responsibilities among the various levels of government. Accordingly, the agency concludes that the rule does not contain policies that have federalism implications as defined in the Executive order and, consequently, a federalism summary impact statement is not required.

VIII. References

The following references are on display in the Division of Dockets Management (HFA–305), Food and Drug Administration, 5630 Fishers Lane, rm. 1061, Rockville, MD 20852, and may be seen by interested persons between 9 a.m. and 4 p.m., Monday through Friday. (FDA has verified the Web site addresses, but FDA is not responsible for any subsequent changes to the Web site after this document publishes in the **Federal Register**.)

1. Fact sheet from Mason County, Washington State Government Services, ''Head Lice (Pediculosis),'' *http://www.co.mason.wa.us/health/Headlice.shtml*.

2. Fact sheet from King County, Washington State Government Services, ''Communicable Disease Fact Sheet Head Lice (Pediculosis),'' *http://www.metrokc.gov/health/prevcont/headlice.htm*.

List of Subjects in 21 CFR Part 358

Labeling, Over-the-counter drugs.

■ Therefore, under the Federal Food, Drug, and Cosmetic Act and under authority delegated to the Commissioner of Food and Drugs, 21 CFR part 358 is amended as follows:

PART 358—MISCELLANEOUS EXTERNAL DRUG PRODUCTS FOR OVER-THE-COUNTER HUMAN USE

■ 1. The authority citation for 21 CFR part 358 continues to read as follows:

Authority: 21 U.S.C. 321, 351, 352, 353, 355, 360, 371.

■ 2. Section 358.650 is revised to read as follows:

§ 358.650 Labeling of pediculicide drug products.

(a) *Statement of identity*. The labeling of the product contains the established name of the drug, if any, and identifies the product as a ''lice treatment.''

(b) *Indications*. The labeling of the product states, under the heading ''Uses,'' the following: ''treats head, pubic (crab), and body lice.'' Other truthful and nonmisleading statements, describing only the uses that have been established and listed in this paragraph (b), may also be used, as provided in § 330.1(c)(2) of this chapter, subject to the provisions of section 502 of the Federal Food, Drug, and Cosmetic Act (the act) relating to misbranding and the prohibition in section 301(d) of the act against the introduction or delivery for introduction into interstate commerce of unapproved new drugs in violation of section 505(a) of the act.

(c) *Warnings*. The labeling of the product contains the following warnings under the heading ''Warnings'':

(1) ''For external use only'' in accord with § 201.66(c)(5)(i) of this chapter.

(2) ''Do not use [bullet][1] near eyes [bullet] inside nose, mouth, or vagina [bullet] on lice in eyebrows or eyelashes. See a doctor if lice are present in these areas.''

(3) ''Ask a doctor before use if you are [bullet] allergic to ragweed. May cause breathing difficulty or an asthmatic attack.''

(4) ''When using this product [bullet] keep eyes tightly closed and protect eyes with a washcloth or towel [bullet] if product gets in eyes, flush with water right away [bullet] scalp itching or redness may occur''.

(5) ''Stop use and ask a doctor if [bullet] breathing difficulty occurs [bullet] eye irritation occurs [bullet] skin or scalp irritation continues or infection occurs''.

(d) *Directions*. The labeling of the product contains the following information under the heading ''Directions'':

(1) The labeling states ''[bullet] Important: Read warnings before use'' [statement shall appear first and in bold type].

(2) The labeling states ''adults and children 2 years and over:'' [in bold type].

(3) For head lice treatment products ''Inspect [in bold type] [bullet] check eachhousehold member with a magnifying glass in bright light for lice/nits (eggs) [bullet]look for tiny nits near scalp, beginning at back of neck and behind ears [bullet] examinesmall sections of hair at a time [bullet] unlike dandruff which moves when touched, nitsstick to the hair [bullet] if either lice or nits are found, treat with this product''.

(4) Select one of the following:

(i) *For shampoo products* ''Treat [in bold type] [bullet] apply thoroughly to (optional, may add ''dry'') hair or other affected area. For head lice, first apply behind ears and to back of neck. [bullet] allow product to remain for 10 minutes, but no longer [bullet] use warm water to form a lather, shampoo, then thoroughly rinse [bullet] for head lice, towel dry hair and comb out tangles''.

(ii) *For nonshampoo products* ''Treat [in bold type] [bullet] apply thoroughly to (optional, may add ''dry'') hair or other affected area. For head lice, first apply behind ears and to back of neck. [bullet] allow product to remain for 10 minutes, but no longer [bullet] wash area thoroughly with warm water and soap or shampoo [bullet] for head lice, towel dry hair and comb out tangles''.

(5) ''Remove lice and their eggs (nits) [in bold type] [bullet] use a fine-tooth or special lice/nit comb. Remove any remaining nits by hand (using a throw-away glove). [bullet] hair should remain slightly damp while removing nits [bullet] if hair dries during combing, dampen slightly with water [bullet] for head lice, part hair into sections. Do one section at a time starting on top of head. Longer hair may take 1 to 2 hours. [bullet] lift a 1- to 2-inch wide strand of hair. Place comb as close to scalp as possible and comb with a firm, even motion away from scalp. [bullet] pin back each strand of hair after combing [bullet] clean comb often. Wipe nits away with tissue and discard in a plastic bag. Seal bag and discard to prevent lice from coming back. [bullet] after combing, thoroughly recheck for lice/nits. Repeat combing if necessary. [bullet] check daily for any lice/nits that you missed''.

(6) The labeling states ''[bullet] a second treatment must be done in 7 to 10 days to kill any newly hatched lice''.

(7) The labeling states ''[bullet] if infestation continues, see a doctor for othertreatments''.

(8) The labeling states ''children under 2 years:'' [in bold type] ''ask a doctor''.

(e) *Other information*. The labeling of the product contains the following statements, as appropriate, under the heading ''Other information.'' This information may appear in a package insert. If a package insert is used, the ''Other information'' section on the outer carton or container label shall include a statement referring to the package insert for additional information.

(1) ''Head lice [highlighted in bold type] [bullet] lay small white eggs (nits) on hair shaft close to scalp [bullet] nits are most easily found on back of neck or behind ears [bullet] disinfect hats, hair ribbons, scarves, coats, towels, and bed linens by machine washing in hot water (above 54 °C (130 °F)), then using hottest dryer cycle for at least 20 minutes [bullet] items that cannot be washed (bedspreads, blankets, pillows, stuffed toys, etc.) should be dry-cleaned or sealed in a plastic bag for 4 weeks, then removed outdoors and shaken out very hard before using again [bullet] items that cannot be washed, dry-cleaned, or stored may be sprayed with a product designed for this purpose [bullet] soak all combs and brushes in hot water (above 54 °C (130 °F)) for at least 10 minutes [bullet] vacuum all carpets, mattresses, upholstered furniture, and car seats that may have been used by affected people''.

(2) ''Pubic (crab) lice [highlighted in bold type] [bullet] may be transmitted by sexual contact. Sexual partners should be treated simultaneously to avoid reinfestation [bullet] lice are very small and look like brown or grey dots on skin [bullet] usually cause intense itching and lay small white eggs (nits) on the hair shaft generally close to the skin surface [bullet] may be present on the short hairs of groin, thighs, trunk, and underarms, and occasionally on the beard and mustache [bullet] disinfect underwear by machine washing in hot water (above 54 °C (130 °F)), then using hottest dryer cycle for at least 20 minutes''.

(3) ''Body lice [highlighted in bold type] [bullet] body lice and their eggs (nits) are generally found in the seams of clothing particularly in waistline and armpit area [bullet] body lice feed on skin then return to clothing to lay their eggs [bullet] disinfect clothing by machine washing in hot water (above 54 °C (130 °F)), then using hottest dryer cycle for at least 20 minutes [bullet] do not seal clothing in a plastic bag because nits can remain dormant for up to 30 days''.

[1] See § 201.66(b)(4) of this chapter for definition of bullet symbol.

Dated: December 18, 2003.

Jeffrey Shuren,

Assistant Commissioner for Policy.

[FR Doc. 03–32100 Filed 12–30–03; 8:45 am]

BILLING CODE 4160–01–S

DEPARTMENT OF THE INTERIOR

Office of Surface Mining Reclamation and Enforcement

30 CFR Part 914

[IN–153–FOR; Administrative Cause No. 02–034R]

Indiana Regulatory Program

AGENCY: Office of Surface Mining Reclamation and Enforcement, Interior.

ACTION: Final rule; approval of amendment.

SUMMARY: We, the Office of Surface Mining Reclamation and Enforcement (OSM), are approving an amendment to the Indiana regulatory program (Indiana program) under the Surface Mining Control and Reclamation Act of 1977 (SMCRA or the Act). The Indiana Department of Natural Resources (IDNR or Indiana) proposed revisions to and additions of rules concerning protection of ground water quality. Indiana revised its program to provide additional safeguards for ground water.

EFFECTIVE DATE: December 31, 2003.

FOR FURTHER INFORMATION CONTACT: Andrew R. Gilmore, Director, Indianapolis Field Office. Telephone: (317) 226–6700. Internet address: *IFOMAIL@osmre.gov.*

SUPPLEMENTARY INFORMATION:

I. Background on the Indiana Program
II. Submission of the Amendment
III. OSM's Findings
IV. Summary and Disposition of Comments
V. OSM's Decision
VI. Procedural Determinations

I. Background on the Indiana Program

Section 503(a) of the Act permits a State to assume primacy for the regulation of surface coal mining and reclamation operations on non-Federal and non-Indian lands within its borders by demonstrating that its State program includes, among other things, ''a State law which provides for the regulation of surface coal mining and reclamation operations in accordance with the requirements of this Act * * * and rules and regulations consistent with regulations issued by the Secretary pursuant to this Act.'' See 30 U.S.C. 1253(a)(1) and (7). On the basis of these criteria, the Secretary of the Interior conditionally approved the Indiana program effective July 29, 1982. You can find background information on the Indiana program, including the Secretary's findings, the disposition of comments, and the conditions of approval, in the July 26, 1982, **Federal Register** (47 FR 32071). You can also find later actions concerning the Indiana program and program amendments at 30 CFR 914.10, 914.15, 914.16, and 914.17.

II. Submission of the Amendment

By letter dated September 3, 2003 (Administrative Record No. IND–1719), IDNR sent us an amendment to its program under SMCRA (30 U.S.C. 1201 *et seq.*). IDNR proposed to amend its program by adding new definitions, application requirements, and performance standards concerning the protection of ground water quality. IDNR is amending the Indiana program because the Indiana Groundwater Protection Act of 1989 (Indiana Code (IC) 13–18–17) requires any State agency with jurisdiction over an activity that may affect the quality of Indiana's ground water to adopt rules to apply the groundwater quality standards established by the Indiana Water Pollution Control Board (WPCB). In accordance with IC 13–18–17, WPCB adopted ground water quality standards at 327 Indiana Administrative Code (IAC) 2–11. WPCB's rule at 327 IAC 2–11–2 specifically requires IDNR to adopt rules to apply the standards established in 327 IAC 2–11 to the facilities, practices, and activities it regulates.

We announced receipt of the proposed amendment in the October 15, 2003, **Federal Register** (68 FR 59352). In the same document, we opened the public comment period and provided an opportunity for a public hearing or meeting on the adequacy of the amendment. We did not hold a public hearing or meeting because no one requested one. The public comment period ended on November 14, 2003. We received comments from one industry group, one citizens group, and one Federal agency.

III. OSM's Findings

Following are the findings we made concerning the amendment under SMCRA and the Federal regulations at 30 CFR 732.15 and 732.17. We are approving the amendment as described below.

A. Definitions

Indiana added the definitions discussed below from WPCB's definitions at 327 IAC 2–11–3(5), (8) and (11). Indiana added these definitions to help in implementing its new performance standards concerning the protection of ground water quality at 312 IAC 25–6–12.5 and 25–6–76.5.

1. At 312 IAC 25–1–45.5, Indiana is adding the following definition for ''drinking water well.''

> ''Drinking water well,'' for the purposes of 312 IAC 25–6–12.5 and 312 IAC 25–6–76.5, means a bored, drilled, or driven shaft or a dug hole that meets each of the following:
> (1) Supplies ground water for human consumption.
> (2) Has a depth greater than its largest surface dimension.
> (3) Is not permanently abandoned under 312 IAC 13–10–2.

Although there is no direct Federal counterpart definition for a drinking water well, Indiana's proposed definition is not inconsistent with the Federal definition of ''drinking, domestic, or residential water supply'' at 30 CFR 701.5. The Federal definition means, in part, water received from a well for direct human consumption or household use. Therefore, we are approving Indiana's definition at 312 IAC 25–1–45.5.

2. At 312 IAC 25–1–60.5, Indiana is adding the following definition for ''Ground water management zone.''

> ''Ground water management zone'' means a three (3) dimensional region of ground water around a potential or existing contaminant source where a contaminant is or was managed to prevent or mitigate deterioration of ground water quality such that the criteria established in 312 IAC 25–6–12.5(a) or 312 IAC 25–6–76.5(a) are met at and beyond the boundary of the region.

There is no Federal counterpart definition for the term ''ground water management zone.'' However, Indiana's proposed definition is not inconsistent with sections 515(b)(10) and 516(b)(9) of SMCRA or the Federal requirements at 30 CFR 816.41 and 817.41 concerning protection of the hydrologic balance, including ground water quality protection. Therefore, we are approving Indiana's definition at 312 IAC 25–1–60.5.

3. At 312 IAC 25–1–109.5, Indiana is adding the following definition for ''Property boundary.''

> ''Property boundary,'' for the purposes of 312 IAC 25–6–12.5 and 312 IAC 25–6–76.5, means the edge of a contiguous parcel of land owned by or leased to the permittee. Contiguous land shall include land separated by a public right-of-way, if that land would otherwise be contiguous.

There is no Federal counterpart definition for the term ''property boundary.'' However, Indiana's proposed definition is not inconsistent with the Federal definition of ''permit area'' at 30 CFR 701.5 or the Federal requirements concerning permit

boundaries at 30 CFR 779.24 and 783.24. Therefore, we are approving Indiana's definition at 312 IAC 25–1–109.5.

B. Surface Mining Permit Applications

1. At 312 IAC 25–4–43, Indiana is adding subdivision (4). This new subdivision requires the maps and plans of the proposed permit and adjacent areas to include all monitoring locations used to demonstrate compliance with 312 IAC 25–6–12.5.

There is no direct Federal counterpart to subdivision (4). However, the proposed provision is not inconsistent with the requirements of the Federal regulations at 30 CFR 780.21(i) concerning ground water monitoring plans. The Federal regulation at 30 CFR 780.21(i)(1) requires the ground water monitoring plan to include identification of site locations for ground water monitoring. Therefore, we are approving 312 IAC 25–4–43(4).

2. At 312 IAC 25–4–47(b), protection of hydrologic balance, Indiana is adding subdivision (9). This new subdivision requires the reclamation plan to contain a description, with appropriate maps and cross section drawings, of a plan to demonstrate compliance with 312 IAC 25–6–12.5.

Although there is no direct Federal counterpart to subdivision (9), the proposed provision is not inconsistent with the requirements of the Federal regulation at 30 CFR 780.21(h) concerning hydrologic reclamation plans. The Federal regulation at 30 CFR 780.21(h) requires the hydrologic reclamation plan to contain steps to be taken to meet applicable Federal and State water quality laws and regulations. Therefore, we are approving 312 IAC 25–4–47(b)(9).

C. Underground Mining Permit Applications

1. At 312 IAC 25–4–85(b), protection of hydrologic balance, Indiana is adding subdivision (8). This new subdivision requires the reclamation plan to contain a description, with appropriate maps and cross section drawings, of a plan to demonstrate compliance with 312 IAC 25–6–76.5.

Although there is no direct Federal counterpart to subdivision (8), the proposed provision is not inconsistent with the requirements of the Federal regulation at 30 CFR 784.14(g) concerning hydrologic reclamation plans. The Federal regulation at 30 CFR 784.14(g) requires hydrologic reclamation plans to contain steps to be taken to meet applicable Federal and State water quality laws and regulations. Therefore, we are approving 312 IAC 25–4–85(b)(8).

2. At 312 IAC 25–4–93, Indiana is adding subdivision (4). This new subdivision requires the maps and plans of the proposed permit and adjacent areas to include all monitoring locations used to demonstrate compliance with 312 IAC 25–6–76.5.

Although there is no direct Federal counterpart to subdivision (4), the proposed provision is not inconsistent with the requirements of the Federal regulation at 30 CFR 784.14(h) concerning ground water monitoring plans. The Federal regulation at 30 CFR 784.14(h)(1) requires the ground water monitoring plan to include identification of site locations for ground water monitoring. Therefore, we are approving 312 IAC 25–4–93(4).

D. Surface Mining—Hydrologic Balance; Ground Water Quality Standards

Indiana is adding a new rule at 312 IAC 25–6–12.5 to read as follows:

312 IAC 25–6–12.5 Hydrologic balance; application of ground water quality standards at surface coal mining and reclamation operations permitted under IC 14–34 on which coal extraction, including augering, coal processing, coal processing waste disposal, or spoil deposition, occurs after the effective date of this section, or on which disposal activity subject to IC 13–19–3–3 has occurred and the area is not fully released from the performance bond required by IC 14–34–6.

(a) Ground water is classified under 327 IAC 2–11 to determine appropriate criteria that shall be applied to ground water.

(b) Surface coal mining and reclamation operations must be planned and conducted to prevent violations of ground water quality standards under 327 IAC 2–11.

(c) Surface coal mining and reclamation operations must be planned and conducted to prevent impacts to the ground water in a drinking water well or a nondrinking water supply well, including an industrial, commercial, or agricultural supply well, that result in a contaminant concentration that, based on best scientific information, renders the well unusable for its current use. If a drinking water well or a nondrinking water supply well is affected by contamination, diminution, or interruption proximately resulting from surface mining activities, 312 IAC 25–4–33 and 312 IAC 25–6–25 govern water replacement.

(d) The ground water management zone described in 327 IAC 2–11–9 must be established as follows:

(1) At each drinking water well that is within three hundred (300) feet from the edge of any of the following:

(A) A coal extraction area.

(B) A coal mine processing waste disposal site if not within a coal extraction area.

(C) An area where coal is extracted by auger mining methods.

(D) A location at which coal is crushed, washed, screened, stored, and loaded at or near the mine site unless the location is within the coal extraction area.

(E) A spoil deposition area.

(2) Within three hundred (300) feet from the edge of an area or site described in subdivision (1) where there is no drinking water well that is within three hundred (300) feet from the edge of an area or site described in subdivision (1). If the property boundary or permit boundary is located within three hundred (300) feet from the edge of an area or site described in subdivision (1), the director shall require that a monitoring well be placed at a location approved by the director between the property boundary or permit boundary and the edge of an area or site described in subdivision (1). If a standard listed in 327 IAC 2–11 is exceeded at a monitoring well described in subdivision (2) that the director determines was caused by an activity under subdivision (1), the permittee must submit to the director a plan describing, in detail, the steps to be taken to prevent material damage to the hydrologic balance beyond the permit boundary and a timetable for implementation. This plan must be submitted within thirty (30) days of the discovery of an exceedance and include information relative to access, additional monitoring, and any measures to be taken to minimize changes to the prevailing hydrologic balance and to prevent material damage to the hydrologic balance beyond the permit boundary.

(3) If a drinking water well is located within three hundred (300) feet of an area or site described in subdivision (1) and it is determined that there is a substantial likelihood of impact, the director may require that a monitoring well be placed at a location approved by the director between the drinking water well and the edge of an area or site described in subdivision (1). If a standard listed in 327 IAC 2–11 is exceeded at a monitoring well described in subdivision (3) that the director determines was caused by an activity under subdivision (1), the permittee shall submit to the director a plan describing, in detail, the steps to be taken and a timetable for taking the action that takes into account site-specific conditions to provide protection for the drinking water well. This plan must be submitted within thirty (30) days of the discovery of an exceedance and include information relative to access, additional monitoring, and any measures to be taken to minimize changes to the prevailing hydrologic balance and to prevent material damage to the hydrologic balance beyond the permit boundary.

(e) The criteria established in subsection (a) must be met at and beyond the boundary of the ground water management zone.

There is no direct Federal counterpart to the proposed regulation at 312 IAC 25–6–12.5. However, we find that the requirements of 312 IAC 25–6–12.5 are not inconsistent with Section 515(b)(10) of SMCRA or the Federal regulations at 30 CFR 780.21(h) and 816.41(a), concerning protection of the hydrologic balance. The Federal regulation at 30 CFR 780.21(h), concerning hydrologic reclamation plans, requires plans to contain steps to be taken to meet

applicable Federal and State water quality laws and regulations. Section 515(b)(10) of SMCRA and the Federal regulation at 30 CFR 816.41(a) allow the regulatory authority to require additional preventative, remedial, or monitoring measures to assure that material damage to the hydrologic balance outside the permit area is prevented. Therefore, we are approving 312 IAC 25–6–12.5.

E. Underground Mining—Hydrologic Balance; Ground Water Quality Standards

Indiana is adding a new rule at 312 IAC 25–6–76.5 to read as follows:

312 IAC 25–6–76.5 Underground mining; hydrologic balance; application of ground water quality standards at underground coal mining and reclamation operations permitted under IC 14–34 on which coal extraction, coal processing, coal processing waste disposal, or underground development waste and spoil deposition occurs after the effective date of this section, or on which disposal activity subject to IC 13–19–3–3 has occurred and the area is not fully released from the performance bond required by IC 14–34–6.

(a) Ground water is classified under 327 IAC 2–11 to determine appropriate criteria that shall be applied to ground water.

(b) Underground coal mining and reclamation operations must be planned and conducted to prevent violations of ground water quality standards under 327 IAC 2–11.

(c) Underground coal mining and reclamation operations must be planned and conducted to prevent impacts to the ground water in a drinking water well or a nondrinking water supply well, including an industrial, commercial, or agricultural supply well, that result in a contaminant concentration that, based on best scientific information, renders the well unusable for its current use. If a drinking water well or a nondrinking water supply well is affected by contamination, diminution, or interruption proximately resulting from surface mining activities, 312 IAC 25–4–74 and 312 IAC 25–6–88 govern water replacement.

(d) The ground water management zone described in 327 IAC 2–11–9 must be established as follows:

(1) At each drinking water well that is within three hundred (300) feet from the edge of any of the following:

(A) A coal mine processing waste disposal site.

(B) A location at which coal is crushed, washed, screened, stored, and loaded at or near the mine site.

(C) An underground development waste and spoil deposition area.

(2) Within three hundred (300) feet from the edge of an area or site described in subdivision (1) where there is no drinking water well that is within three hundred (300) feet from the edge of an area or site described in subdivision (1). If the property boundary or permit boundary is located within three hundred (300) feet from the edge of an area or site described in subdivision (1), the director shall require that a monitoring well be placed at a location approved by the director between the property boundary or permit boundary and the edge of an area or site described in subdivision (1). If a standard listed in 327 IAC 2–11 is exceeded at a monitoring well described in subdivision (2) that the director determines was caused by an activity under subdivision (1), the permittee must submit to the director a plan describing, in detail, the steps to be taken to prevent material damage to the hydrologic balance beyond the permit boundary and a timetable for implementation. This plan must be submitted within thirty (30) days of the discovery of an exceedance and include information relative to access, additional monitoring, and any measures to be taken to minimize changes to the prevailing hydrologic balance and to prevent material damage to the hydrologic balance beyond the permit boundary.

(3) If a drinking water well is located within three hundred (300) feet of an area or site described in subdivision (1) and it is determined that there is a substantial likelihood of impact, the director may require that a monitoring well be placed at a location approved by the director between the drinking water well and the edge of an area or site described in subdivision (1). If a standard listed in 327 IAC 2–11 is exceeded at a monitoring well described in subdivision (3) that the director determines was caused by an activity under subdivision (1), the permittee shall submit to the director a plan describing, in detail, the steps to be taken and a timetable for taking the action that takes into account site-specific conditions to provide protection for the drinking water well. This plan must be submitted within thirty (30) days of the discovery of an exceedance and include information relative to access, additional monitoring, and any measures to be taken to minimize changes to the prevailing hydrologic balance and to prevent material damage to the hydrologic balance beyond the permit boundary.

(e) The criteria established in subsection (a) must be met at and beyond the boundary of the ground water management zone.

There is no direct Federal counterpart to the proposed regulation at 312 IAC 25–6–76.5. However, we find that the requirements of 312 IAC 25–6–76.5 are not inconsistent with Section 516(b)(9) of SMCRA or the Federal regulations at 30 CFR 784.14(g) and 817.41(a), concerning protection of the hydrologic balance. The Federal regulation at 30 CFR 784.14(g), concerning hydrologic reclamation plans, requires plans to contain steps to be taken to meet applicable Federal and State water quality laws and regulations. Section 516(b)(9) of SMCRA and the Federal regulation at 30 CFR 817.41(a) allow the regulatory authority to require additional preventative, remedial, or monitoring measures to assure that material damage to the hydrologic balance outside the permit area is prevented. Therefore, we are approving 312 IAC 25–6–76.5.

IV. Summary and Disposition of Comments

Public Comments

On October 15, 2003, we asked for public comments on the amendment (68 FR 59352), and received comments from one industry group and one citizens group.

Industry Group. We received comments from the Indiana Coal Council, Inc. (ICC) on October 31, 2003 (Administrative Record No. IND–1723). ICC commented that the proposed amendment is not inconsistent with any provision of SMCRA or of OSM's permanent program regulations, and should be approved. ICC also commented that the proposed amendment would not repeal or revise the requirement of Indiana's counterpart to 30 CFR 816.41(a) that surface mining and reclamation activities be conducted to prevent material damage to the hydrologic balance outside the permit area. ICC provided support for these comments.

We agree with ICC's comments. As shown above in section III, OSM's Findings, we found that the provisions of Indiana's proposed amendment are not inconsistent with SMCRA or the Federal regulations concerning protection of the hydrologic balance.

Citizens Group. We received comments from the Hoosier Environmental Council (HEC) on November 14, 2003 (Administrative Record No. IND–1724).

HEC Comment 1

The rules make no mention of wells used for purposes other than human consumption. The Indiana Ground Water Quality Standards state 'No person shall cause the ground water in a non-drinking water supply well, including an industrial, commercial, or agricultural supply well, to have a contaminant concentration that, based on best scientific information, renders the well unusable for it current use.' 327 IAC 2–11–2 Sec. 2(f) Despite this requirement, a definition is only provided for drinking water wells, and no mention is made in the rules about protection of non-drinking water supply wells.

A definition for non-drinking water supply wells should be included in these rules. Language should be inserted requiring the protection of the use of these wells. While not used for human consumption, these wells are an important resource to their owners including farmers who often rely on ground water for irrigation and livestock. Farmers would be especially hard hit by the cost of replacing these wells with municipal water or other water supplies.

Response to Comment 1. We disagree with the commenter. Indiana's proposed rules do require protection for nondrinking water supply wells.

Specifically, Indiana's proposed rules at 312 IAC 25–6–12.5(c) for surface mining and 25–6–76.5(c) for underground mining provide that coal mining and reclamation operations must be planned and conducted to prevent impacts to the ground water in a drinking water well or a nondrinking water supply well, including an industrial, commercial, or agricultural supply well. The operations must prevent impacts to the ground water that result in a contaminant concentration that, based on best scientific information, renders the well unusable for its current use. These rules also provide remedies if a drinking water well or a nondrinking water supply well is affected by contamination, diminution, or interruption proximately resulting from mining activities. Indiana's rules at 312 IAC 25–4–33 and 312 IAC 25–6–25 govern water replacement for surface mining activities and 312 IAC 25–4–74 and 312 IAC 25–6–88 govern water replacement for underground mining activities. Although Indiana did not add a definition for non-drinking water supply wells, neither did the Water Pollution Control Board in its rules at 327 IAC 2–11.

HEC Comment 2

The rule sets no provisions for minimizing ground water contamination within the mine itself. Indiana's Surface Mining Control and Reclamation Act (I–SMCRA), Ind. Code § 14–34 *et seq.*, requires mine operators to 'Minimize disturbances to the prevailing hydrologic balance at the mine site and associated offsite areas and to the quality and quantity of water in surface and ground water system during and after surface coal mining and reclamation operations.' (IC 14–34–10–2(13)) Under the proposed rule, no standards will apply within the ground water management zone. Under the IDEM [Indiana Department of Environmental Management] ground water standards, the standard for these areas becomes the amount of pollution caused by mining upon bond release. Thus these rules do not enforce the requirement to minimize the pollution of mine waters within mined properties.

Response to Comment 2. Indiana's proposed rules are in addition to Indiana's existing rules for the protection of the hydrologic balance at 312 IAC 25–6, which apply to the entire permit area and adjacent areas. The proposed rules do not replace or restrict the requirements of IC 14–34–10–2(13) or of Indiana's implementing rules at 312 IAC 25–6–12 and 25–6–21 through 25–6–23.

HEC Comment 3

The provisions of federal and state mining law in concerns to ground water contamination will be enforced by the standards set by this proposed rule. Under its current language, it does not comply with the requirements of SMCRA and I–SMCRA of minimizing pollution within the mine boundaries and preventing pollution outside of the permit boundary.

Response to Comment 3. We disagree with the commenter. As discussed in our response to Comment 2 above, the proposed rules do not replace or restrict Indiana's existing rules concerning protection of the hydrologic balance, including ground water. Although Indiana's proposed rules at 312 IAC 25–6–12.5 and 25–6–76.5 will specifically enforce the ground water quality standards under 327 IAC 2–11, Indiana's existing rules enforce the hydrologic balance standards, including ground water, required by SMCRA and I–SMCRA.

Federal Agency Comments

On September 9, 2003, under 30 CFR 732.17(h)(11)(i) and section 503(b) of SMCRA, we requested comments on the amendment from various Federal agencies with an actual or potential interest in the Indiana program (Administrative Record No. IND–1720). The U.S. Fish and Wildlife Service responded on October 8, 2003 (Administrative Record No. IND–1721), that it had no specific comments on the program amendment.

Environmental Protection Agency (EPA) Concurrence and Comments

Under 30 CFR 732.17(h)(11)(ii), we are required to get a written concurrence from EPA for those provisions of the program amendment that relate to air or water quality standards issued under the authority of the Clean Water Act (33 U.S.C. 1251 *et seq.*) or the Clean Air Act (42 U.S.C. 7401 *et seq.*). None of the revisions that Indiana proposed to make in this amendment pertain to these air or water quality standards. Therefore, we did not ask EPA to concur on the amendment.

On September 9, 2003, under 30 CFR 732.17(h)(11)(i), we requested comments on the amendment from EPA (Administrative Record No. IND–1720). EPA did not respond to our request.

State Historical Preservation Officer (SHPO) and the Advisory Council on Historic Preservation (ACHP)

Under 30 CFR 732.17(h)(4), we are required to request comments from the SHPO and ACHP on amendments that may have an effect on historic properties. On September 9, 2003, we requested comments on Indiana's amendment (Administrative Record No. IND–1720), but neither responded to our request.

V. OSM's Decision

Based on the above findings, we approve the amendment Indiana sent us on September 3, 2003.

We approve the rules proposed by Indiana with the provision that they be fully promulgated in identical form to the rules submitted to and reviewed by OSM and the public.

To implement this decision, we are amending the Federal regulations at 30 CFR part 914, which codify decisions concerning the Indiana program. We find that good cause exists under 5 U.S.C. 553(d)(3) to make this final rule effective immediately. Section 503(a) of SMCRA requires that the State's program demonstrate that the State has the capability of carrying out the provisions of the Act and meeting its purposes. Making this rule effective immediately will expedite that process. SMCRA requires consistency of State and Federal standards.

VI. Procedural Determinations

Executive Order 12630—Takings

The revisions made at the initiative of the State that do not have Federal counterparts have been reviewed and a determination made that they do not have takings implications. This determination is based on the fact that the provisions have no substantive effect on the regulated industry.

Executive Order 12866—Regulatory Planning and Review

This rule is exempted from review by the Office of Management and Budget (OMB) under Executive Order 12866.

Executive Order 12988—Civil Justice Reform

The Department of the Interior has conducted the reviews required by section 3 of Executive Order 12988 and has determined that this rule meets the applicable standards of subsections (a) and (b) of that section. However, these standards are not applicable to the actual language of State regulatory programs and program amendments because each program is drafted and promulgated by a specific State, not by OSM. Under sections 503 and 505 of SMCRA (30 U.S.C. 1253 and 1255) and the Federal regulations at 30 CFR 730.11, 732.15, and 732.17(h)(10), decisions on proposed State regulatory programs and program amendments submitted by the States must be based solely on a determination of whether the submittal is consistent with SMCRA and its implementing Federal regulations and whether the other requirements of 30 CFR parts 730, 731, and 732 have been met.

Executive Order 13132—Federalism

This rule does not have Federalism implications. SMCRA delineates the roles of the Federal and State governments with regard to the regulation of surface coal mining and reclamation operations. One of the purposes of SMCRA is to ''establish a nationwide program to protect society and the environment from the adverse effects of surface coal mining operations.'' Section 503(a)(1) of SMCRA requires that State laws regulating surface coal mining and reclamation operations be ''in accordance with'' the requirements of SMCRA, and section 503(a)(7) requires that State programs contain rules and regulations ''consistent with'' regulations issued by the Secretary pursuant to SMCRA.

Executive Order 13175—Consultation and Coordination With Indian Tribal Governments

In accordance with Executive Order 13175, we have evaluated the potential effects of this rule on Federally-recognized Indian tribes and have determined that the rule does not have substantial direct effects on one or more Indian tribes, on the relationship between the Federal Government and Indian tribes, or on the distribution of power and responsibilities between the Federal Government and Indian tribes. This determination is based on the fact that the Indiana program does not regulate coal exploration and surface coal mining and reclamation operations on Indian lands. Therefore, the Indiana program has no effect on Federally-recognized Indian tribes.

Executive Order 13211—Regulations That Significantly Affect the Supply, Distribution, or Use of Energy

On May 18, 2001, the President issued Executive Order 13211 which requires agencies to prepare a Statement of Energy Effects for a rule that is (1) considered significant under Executive Order 12866, and (2) likely to have a significant adverse effect on the supply, distribution, or use of energy. Because this rule is exempt from review under Executive Order 12866 and is not expected to have a significant adverse effect on the supply, distribution, or use of energy, a Statement of Energy Effects is not required.

National Environmental Policy Act

This rule does not require an environmental impact statement because section 702(d) of SMCRA (30 U.S.C. 1292(d)) provides that agency decisions on proposed State regulatory program provisions do not constitute major Federal actions within the meaning of section 102(2)(C) of the National Environmental Policy Act (42 U.S.C. 4332(2)(C)).

Paperwork Reduction Act

This rule does not contain information collection requirements that require approval by OMB under the Paperwork Reduction Act (44 U.S.C. 3507 *et seq.*).

Regulatory Flexibility Act

The Department of the Interior certifies that the provisions in this rule that are not based upon counterpart Federal regulations will not have a significant economic impact on a substantial number of small entities under the Regulatory Flexibility Act (5 U.S.C. 601 *et seq.*). This determination is based upon the fact that the provisions are not expected to have a substantive effect on the regulated industry.

Small Business Regulatory Enforcement Fairness Act

This rule is not a major rule under 5 U.S.C. 804(2), the Small Business Regulatory Enforcement Fairness Act. This rule: (a) Does not have an annual effect on the economy of $100 million; (b) Will not cause a major increase in costs or prices for consumers, individual industries, Federal, State, or local government agencies, or geographic regions; and (c) Does not have significant adverse effects on competition, employment, investment, productivity, innovation, or the ability of U.S.-based enterprises to compete with foreign-based enterprises. This determination is based upon the fact that the State provisions are not expected to have a substantive effect on the regulated industry.

Unfunded Mandates

This rule will not impose an unfunded mandate on State, local, or tribal governments or the private sector of $100 million or more in any given year. This determination is based upon the fact that the State provisions are not expected to have a substantive effect on the regulated industry.

List of Subjects in 30 CFR Part 914

Intergovernmental relations, Surface mining, Underground mining.

Dated: December 4, 2003.

Charles E. Sandberg,

Acting Regional Director, Mid-Continent Regional Coordinating Center.

■ For the reasons set out in the preamble, 30 CFR part 914 is amended as set forth below:

PART 914—INDIANA

■ 1. The authority citation for part 914 continues to read as follows:

Authority: 30 U.S.C. 1201 *et seq.*

■ 2. Section 914.15 is amended in the table by adding a new entry in chronological order by ''Date of final publication'' to read as follows:

§ 914.15 Approval of Indiana regulatory program amendments.

* * * * *

Original amendment submission date	Date of final publication	Citation/description
*	*	*
September 3, 2003	December 31, 2003	312 IAC 25–1–45.5, 60.5, 109.5; 25–4–43(4), 47(b)(9), 85(b)(8), 93(4); 25–6–12.5, 76.5.

[FR Doc. 03–32108 Filed 12–30–03; 8:45 am]
BILLING CODE 4310–05–P

DEPARTMENT OF THE INTERIOR

Office of Surface Mining Reclamation and Enforcement

30 CFR Part 917

[KY–245–FOR]

Kentucky Regulatory Program

AGENCY: Office of Surface Mining Reclamation and Enforcement, Interior.

ACTION: Final rule; removal of amendment.

SUMMARY: We, the Office of Surface Mining Reclamation and Enforcement (OSM), are announcing the removal of a required amendment to the Kentucky regulatory program (the ''Kentucky program''). The Kentucky program was established under the Surface Mining Control and Reclamation Act of 1977 (SMCRA or the Act) and authorizes Kentucky to regulate surface coal mining and reclamation operations in Kentucky.

EFFECTIVE DATE: December 31, 2003.

FOR FURTHER INFORMATION CONTACT: William J. Kovacic, Field Office Director; Telephone: (859) 260–8400; E-mail: *bkovacic@osmre.gov.*

SUPPLEMENTARY INFORMATION:

I. Background on the Kentucky Program
II. Purpose of the Rule
III. OSM's Findings
IV. Summary and Disposition of Comments
V. OSM's Decision
VI. Procedural Determinations

I. Background on the Kentucky Program

Section 503(a) of the Act permits a State to assume primacy for the regulation of surface coal mining and reclamation operations on non-Federal and non-Indian lands within its borders by demonstrating that its State program includes, among other things, ''a State law which provides for the regulation of surface coal mining and reclamation operations in accordance with the requirements of the Act * * *; and rules and regulations consistent with regulations issued by the Secretary pursuant to the Act.'' *See* 30 U.S.C. 1253(a)(1) and (7). On the basis of these criteria, the Secretary of the Interior conditionally approved the Kentucky program on May 18, 1982. You can find background information on the Kentucky program, including the Secretary's findings, the disposition of comments, and conditions of approval in the May 18, 1982, **Federal Register** (47 FR 21404). You can also find later actions concerning Kentucky's program and program amendments at 30 CFR 917.11, 917.12, 917.13, 917.15, 917.16, and 917.17.

II. Purpose of the Rule

The required amendment at 30 CFR 917.16(k) reads as follows:

> By October 1, 1993, Kentucky shall submit to OSM either proposed amendments or a schedule for the submission of proposed amendments to Kentucky Administrative Regulations (KAR) to require that the assessment Conference Officer's Report mentioned in 405 KAR 7:092 Section 4(5) be served in a manner consistent with 405 KAR 7:091 Section 5, and to specify that the time allowed under 405 KAR 7:092 Section 6(1)(b) to file a petition for administrative review of the proposed penalty set forth in the Conference Officer's Report does not begin to run until service is obtained in this manner.

On March 28, 2003, OSM forwarded a letter to Kentucky requesting that the required amendment at 30 CFR 917.16(k) be addressed by forwarding to OSM a policy statement that established its procedures on mailing of Conference Officer's Reports and the date that begins the administrative petition process. In response to this request we received a letter from the Kentucky Natural Resources and Environmental Protection Cabinet, Office of Administrative Hearings, dated April 3, 2003, requesting that its policy of requiring all Conference Officer's Reports be sent by certified mail be considered by us as fulfilling the requirements of the above-mentioned amendment (Administrative Record No. KY–1576). Included in the letter was a copy of a memorandum, dated April 2, 2002, sent from the Chief Hearing Officer to the Penalty Assessments Coordinator and the Assessment Conference Officer. This memorandum reminded its recipients that, according to policy, all Conference Officer's Reports should be mailed via certified mail, return receipt requested, and that, in calculating the time for the filing of an administrative petition, the beginning date should be the date of service of the Conference Officer's Report, rather than the mailing date. The memorandum acknowledged that Kentucky's regulation, which allows service by regular mail, had been found by OSM to be less effective than a corresponding Federal regulation (Administrative Record No. KY–1605).

Based on the commitments included in the above-referenced letter and accompanying memorandum, we announced our proposal to remove this required amendment on October 3, 2003, in the **Federal Register** (68 FR 57398). In the same notice we opened the public comment period and provided an opportunity for a public hearing or meeting on whether the policy letter discussed above meets the requirements of the required amendment, thereby eliminating the need for a revision to the Kentucky regulatory program. We did not hold a public hearing or meeting because no one requested one. The public comment period closed on November 3, 2003. We received comments from two Federal agencies (U.S. Department of the Interior, Fish and Wildlife Service and the U.S. Army Corps of Engineers). We also received comments from the Kentucky Resources Council, Inc.

III. OSM's Findings

In our August 6, 1993, decision we determined that the required amendment was necessary because we were concerned that 405 KAR 7:092 section 4(5) was less effective than its Federal counterpart found at 30 CFR 845.18 because of the way in which Conference Officer's Reports were administratively handled (58 FR 42001, 42006). Although Kentucky has not amended its regulations in response to this required amendment, Kentucky's policy has been to serve all Conference Officer's Reports by certified mail and to begin the period for filing an administrative petition from the date of service of the report (Administrative Record No. KY–1605). Our analysis of this policy indicates that it clarifies the language of the Kentucky regulation, which requires service by ''mail'', without specifying whether the service must be made by ''certified'' or ''regular'' mail. 405 KAR 7:092, section 4(5). In addition, Kentucky's policy of starting the appeal period from the date of service indicates that the State interprets its regulation at 405 KAR 7:092, section 6(1)(b), which begins the appeal period on the mailing date, in a manner consistent with its policy, and with the Federal regulations. In other words, it is apparent that Kentucky interprets the term ''mailing'' to include service, *i.e.*, receipt, of the Conference Officer's Report. Furthermore, the record is devoid of any indication that Kentucky has failed to follow this policy in the last decade. With these policy clarifications now in place, these aspects of the Kentucky program clearly meet the requirements of, and are therefore consistent with, the Federal regulations at 30 CFR 845.17 and 845.18.

We do recognize that this determination is being made based on program implementation based on a State policy, rather than via a statutory

or regulatory change. Should we find that in the future the State's actions concerning Conference Officer's Reports are no longer consistent with the requirements of 30 CFR 845.17 and 845.18, we will take the necessary action at that time to bring their program into compliance with this decision.

Therefore, we have determined that the required amendment at 30 CFR 917.16(k) is no longer needed and will be removed.

IV. Summary and Disposition of Comments

Public Comments

The Kentucky Citizens Coal Law Project (KCCLP), a division of the Kentucky Resources Council, submitted comments dated October 28, 2003 (Administrative Record No. KY–1603). These comments primarily relate to two specific concerns which we address below:

(1) KCCLP does not believe the Kentucky policy resolves the conflict between State and Federal regulations concerning the timing for appeal of the Conference Officer's Report.

As we discussed in the above finding, Kentucky has stated, in its policy, that the date for filing an administrative petition begins on the date of service. Therefore, we have determined that the implementation of this program is consistent with the Federal requirements. If we subsequently find that Kentucky is no longer able or willing to enforce its program in a manner consistent with Federal regulations, we will take appropriate action to bring the program back into compliance.

(2) KCCLP does not believe that a Kentucky policy of serving Conference Officer's Reports by certified mail is as effective as its Federal counterpart and violates State and Federal law. This comment appears to rest with both 30 U.S.C. 1253(1)–(7), which requires that State laws and regulations be consistent, and in accordance, with Federal requirements, and Kentucky Revised Statutes (KRS) 13A.130, which prohibits agencies in Kentucky from adopting or enforcing any policy that modifies or alters a regulation.

We agree with the commenter that 30 U.S.C. 1253(a)(1)–(7) require laws and regulations consistent with and in accordance with Federal requirements. We also agree with the commenter on what the Federal requirement is regarding service of Conference Officer Reports. However, we have determined that Kentucky's implementation of its program is consistent with the Federal requirements. The State regulation at issue, 405 KAR 7:092, section 4(5), sets forth that ''[t]he Conference Officer's Report shall be promptly served *by mail* * * *'' (Emphasis added.) The regulation does not specify, however, the type of mail delivery required. For example, it does not require the report to be served by ''regular'' mail. As such, a policy specifying that service be accomplished by ''certified'' mail is not inconsistent with the State regulatory requirement. Further, since documentation of receipt is an integral part of the certified mail process, a policy that begins the period for appeal upon receipt of the certified mail is not inconsistent with the State regulations even though it may not be expressly mandated by that regulation. Kentucky has been operating in a manner consistent with this policy and the Federal requirements for the past decade. Therefore that policy constitutes ample grounds for removing the required amendment. Nevertheless, if in the future we determine that Kentucky is not implementing its program in a manner consistent with the Federal requirements we will revisit this issue and take whatever action is necessary to ensure the State's administrative handling of Conference Officer's Reports occurs in accordance with Federal requirements.

Regarding the State's law, we believe that any step taken by OSM to analyze and interpret KRS 13A.130 in a manner inconsistent with Kentucky's documented policy and practice in applying that law is clearly outside the scope of our jurisdiction. We believe it is within the discretion of the Kentucky Natural Resources and Environmental Protection Cabinet to determine that it is complying with Kentucky's statutory limits in interpreting its regulation in the above-described way.

Federal Agency Comments

The U.S. Department of the Interior, Fish and Wildlife Service submitted a letter dated October 29, 2003 (Administrative Record No. KY–1605), in which they indicated it has no substantive comments regarding the removal of the required amendment.

The U.S. Army Corps of Engineers submitted a statement dated October 31, 2003 (Administrative Record No. KY–1606), in which it indicated it had no comments on the proposed rule.

V. OSM's Decision

Based on the above findings we have determined that the required amendment at 30 CFR 917.16(k) is no longer needed and will be removed.

VI. Procedural Determinations

Executive Order 12630—Takings

This rule is a technical amendment and does not have takings implications.

Executive Order 12866—Regulatory Planning and Review

This rule is exempt from review by the Office of Management and Budget under Executive Order 12866.

Executive Order 12988—Civil Justice Reform

The Department of the Interior has conducted the reviews required by section 3 of Executive Order 12988 and has determined that this rule meets the applicable standards of subsections (a) and (b) of that section.

Executive Order 13132—Federalism

This rule is a technical amendment and does not have federalism implications.

Executive Order 13175—Consultation and Coordination With Indian Tribal Governments

In accordance with Executive Order 13175, we have evaluated the potential effects of this rule on federally-recognized Indian tribes and have determined that the rule does not have substantial direct effects on one or more Indian tribes, on the relationship between the Federal government and Indian tribes, or on the distribution of power and responsibilities between the Federal government and Indian tribes. This determination is based on the fact that the Kentucky program does not regulate coal exploration and surface coal mining and reclamation operations on Indian lands. Therefore, the Kentucky program has no effect on federally-recognized Indian tribes.

Executive Order 13211—Regulations That Significantly Affect the Supply, Distribution, or Use of Energy

On May 18, 2001, the President issued Executive Order 13211 which requires agencies to prepare a Statement of Energy Effects for a rule that is (1) considered significant under Executive Order 12866, and (2) likely to have a significant adverse effect on the supply, distribution, or use of energy. Because this rule is exempt from review under Executive Order 12866 and will not have a significant adverse effect on the supply, distribution, or use of energy, a Statement of Energy Effects is not required.

National Environmental Policy Act

This rule does not require an Environmental Impact Statement

because section 702(d) of SMCRA (30 U.S.C. 1292(d)) provides that agency decisions on proposed state regulatory program provisions do not constitute major Federal actions within the meaning of section 102(2)(C) of the National Environmental Policy Act (42 U.S.C. 4332(2)(C)).

Paperwork Reduction Act

This rule does not contain information collection requirements that require approval by OMB under the Paperwork Reduction Act (44 U.S.C. 3507 *et seq.*).

Regulatory Flexibility Act

The Department of the Interior certifies that this rule will not have a significant economic impact on a substantial number of small entities under the Regulatory Flexibility Act (5 U.S.C. 601 *et seq.*). The rule is a technical amendment that does not impose any additional requirements on small entities.

Small Business Regulatory Enforcement Fairness Act

This rule is not a major rule under 5 U.S.C. 804(2), the Small Business Regulatory Enforcement Fairness Act. For the reasons stated above, this rule: (a) Does not have an annual effect on the economy of $100 million; (b) will not cause a major increase in costs or prices for consumers, individual industries, Federal, State, or local government agencies, or geographic regions; and (c) does not have significant adverse effects on competition, employment, investment, productivity, innovation, or the ability of U.S.-based enterprises to compete with foreign-based enterprises.

Unfunded Mandates

This rule is a technical amendment and will not impose an unfunded mandate on State, local, or tribal governments or the private sector of $100 million or more in any given year.

List of Subjects in 30 CFR Part 917

Intergovernmental relations, Surface mining, Underground mining.

Dated: December 8, 2003.

Brent Wahlquist,

Regional Director, Appalachian Regional Coordinating Center.

■ For the reasons set out in the preamble, 30 CFR part 917 is amended as set forth below:

PART 917—KENTUCKY

■ 1. The authority citation for part 917 continues to read as follows:

Authority: 30 U.S.C. 1201 *et seq.*

§ 917.16 [Amended]

■ 2. Section 917.16 is amended by removing and reserving paragraph (k).

[FR Doc. 03–32107 Filed 12–30–03; 8:45 am]

BILLING CODE 4310–05–P

DEPARTMENT OF HOMELAND SECURITY

Coast Guard

33 CFR Part 165

[COTP Charleston–03–171]

RIN 1625–AA00

Security Zones; Charleston Harbor, Cooper River, SC

AGENCY: Coast Guard, DHS.

ACTION: Temporary final rule; request for comments.

SUMMARY: The Coast Guard is establishing a temporary fixed security zone in the waters under the Don Holt I–526 Bridge on the Cooper River to the entrance of Foster Creek on the Cooper River. This security zone is needed for national security reasons to protect the public and ports from potential subversive acts during port embarkation operations. Vessels are prohibited from entering, transiting, anchoring, mooring, or loitering within this zone, unless specifically authorized by the Captain of the Port, Charleston, South Carolina or his designated representative.

DATES: This regulation is effective from 8 a.m. on December 10, 2003, until 8 a.m. on June 1, 2004. Comments and related material must reach the Coast Guard on or before March 30, 2004.

ADDRESSES: You may mail comments and related material to Coast Guard Marine Safety Office Charleston, 196 Tradd Street, Charleston, South Carolina 29401. Coast Guard Marine Safety Office Charleston maintains the public docket for this rulemaking. Comments and material received from the public, as well as documents indicated in this preamble as being available in the docket, are part of (COTP Charleston 03–171), will become part of this docket and will be available for inspection or copying at Marine Safety Office Charleston, between 7:30 a.m. and 4 p.m., Monday through Friday, except Federal holidays.

FOR FURTHER INFORMATION CONTACT: LT Kevin Floyd, Coast Guard Marine Safety Office Charleston, at (843) 720–3272.

SUPPLEMENTARY INFORMATION:

Request for Comments

We encourage you to participate in this rulemaking by submitting comments and related material. If you do so, please include your name and address, identify the docket number for this rulemaking (CGD07–03–171), indicate the specific section of this document to which each comment applies, and give the reason for each comment. The Coast Guard is especially interested in comments concerning the size and boundaries of this security zone and any economic impact this rule may have on you .

Please submit all comments and related material in an unbound format, no larger than 8½ by 11 inches, suitable for copying. If you would like to know they reached us, please enclose a stamped, self-addressed postcard or envelope. We will consider all comments and material received during the comment period. We may change this rule in view of them.

Good Cause

Under 5 U.S.C. 553(b)(B), the Coast Guard finds that good cause exists for not publishing a Notice of Proposed Rulemaking (NPRM). Publishing an NPRM would be contrary to public safety interests and national security. These regulations are needed to protect the public, the ports and waterways and the national security of the United States from the potential of subversive acts against vessels and port facilities and infrastructure during port embarkation operations occurring within the security zone. For the security concerns noted, it is in the public interest to have these regulations in effect during the port embarkation operations. In addition, notifications will be made via marine information broadcasts.

For the same reasons, under 5 U.S.C. 553(d)(3), the Coast Guard finds that good cause exists for making this rule effective less than 30 days after publication in the **Federal Register**.

Background and Purpose

Based on the September 11, 2001, terrorist attack on the World Trade Center in New York and the Pentagon in Arlington, Virginia, there is an increased risk that subversive terrorist activity could be launched by vessels or persons in close proximity to the Port of Charleston, South Carolina, against military installations or operations occurring within the security zone. This temporary security zone is necessary to protect the safety of life and property on the navigable waters, prevent potential terrorist threats aimed at military

installations during strategic port of embarkation operations occurring within the security zone. The temporary security zone will encompass all waters under the Don Holt I–526 Bridge over the Cooper River to the entrance of Foster Creek on the Cooper River.

Regulatory Evaluation

This rule is not a ''significant regulatory action'' under section 3(f) of Executive Order 12866, Regulatory Planning and Review, and does not require an assessment of potential costs and benefits under section 6(a)(3) of that Order. The Office of Management and Budget has not reviewed it under that Order. It is not significant under the regulatory policies and procedures of the Department of Homeland Security.

We expect the economic impact of this rule to be so minimal so that a full Regulatory Evaluation under the regulatory policies and procedures of DHS is unnecessary. The limited geographic area impacted by the security zone will not restrict the movement or routine operation of commercial or recreational vessels through the Port of Charleston. Also, an individual may request a waiver of these regulations from the Coast Guard Captain of the Port.

Small Entities

Under the Regulatory Flexibility Act (5 U.S.C. 601–612), we have considered whether this rule would have a significant economic effect on a substantial number of small entities. The term ''small entities'' comprises small businesses, not-for-profit organizations that are independently owned and operated and are not dominant in their fields, and governmental jurisdictions with populations of less than 50,000.

The Coast Guard certifies under 5 U.S.C. 605(b) that this rule will not have a significant economic impact on a substantial number of small entities because the limited geographic area encompassed by the security zone will not restrict the movement or routine operation of commercial or recreational vessels through the Port of Charleston. Also, an individual may request a waiver of these regulations from the Coast Guard Captain of the Port of Charleston.

Assistance for Small Entities

Under section 213(a) of the Small Business Regulatory Enforcement Fairness Act of 1996 (Pub. L. 104–121), we offered to assist small entities in understanding the rule so that they could better evaluate its effects on them and participate in the rulemaking process. If the rule will affect your small business and you have questions concerning its provisions or options for compliance, please contact the person listed under **FOR FURTHER INFORMATION CONTACT**.

Small businesses may also send comments on the actions of Federal employees who enforce, or otherwise determine compliance with, Federal regulations to the Small Business and Agriculture Regulatory Enforcement Ombudsman and the Regional Small Business Regulatory Fairness Boards. The Ombudsman evaluates these actions annually and rates each agency's responsiveness to small business. If you wish to comment on actions by employees of the Coast Guard, call 1–888–REG–FAIR (1–888–734–3247).

Collection of Information

This rule calls for no new collection of information requirements under the Paperwork Reduction Act of 1995 (44 U.S.C. 3501–3520).

Federalism

A rule has implication for federalism under Executive Order 13132, federalism, if it has a substantial direct effect on State or local governments and would either preempt State law or impose a substantial direct cost of compliance on them. We have analyzed this rule under that Order and have determined that it does not have implications for federalism.

Unfunded Mandates Reform Act

The Unfunded Mandates Reform Act of 1995 (2 U.S.C. 1531–1538) requires Federal agencies to assess the effects of their discretionary regulatory actions. In particular, the Act addresses actions that may result in the expenditure by a State, local, or tribal government, in the aggregate, or by the private sector of $100,000,000 or more in any one year. Although this rule will not result in such expenditure, we do discuss the effects of this rule elsewhere in this preamble.

Taking of Private Property

This rule will not effect a taking of private property or otherwise have taking implications under Executive Order 12630, Governmental Actions and Interference with Constitutionally Protected Property Rights.

Civil Justice Reform

This rule meets applicable standards in sections 3(a) and 3(b)(2) of Executive Order 12988, Civil Justice Reform, to minimize litigation, eliminate ambiguity, and reduce burden.

Protection of Children

We have analyzed this rule under Executive Order 13045, Protection of Children From Environmental Health Risks and Safety Risks. This rule is not an economically significant rule and does not create an environmental risk to health or risk to safety that may disproportionately affect children.

Indian Tribal Governments

This rule does not have tribal implications under Executive Order 13175, Consultation and Coordination with Indian Tribal Governments, because it does not have a substantial direct effect on one or more Indian tribes, on the relationships between the Federal government and Indian tribes, or on the distribution of power and responsibilities between the Federal government and Indian tribes.

Energy Effects

We have analyzed this rule under Executive Order 13211, Actions Concerning Regulations That Significantly Affect Energy Supply, Distribution, or Use. We have determined that it is not a ''significant energy action'' under that order because it is not a ''significant regulatory action'' under Executive Order 12866 and is not likely to have a significant adverse effect on the supply, distribution, or use of energy. It has not been designated by the Administrator of the Office of Information and Regulatory Affairs as a significant energy action. Therefore, it does not require a Statement of Energy Effects under Executive Order 13211.

Environment

We considered the environmental impact of this rule and concluded that, under Figure 2–1, paragraph 34(g) of Commandant Instruction M16475.lD, this rule is categorically excluded from further environmental documentation. A ''Categorical Exclusion Determination'' is available in the docket where indicated under **ADDRESSES**.

List of Subjects in 33 CFR Part 165

Harbors, Marine safety, Navigation (water), Reporting and recordkeeping requirements, Security measures, Waterways.

■ For the reasons discussed in the preamble, the Coast Guard amends 33 CFR part 165, as follows:

PART 165—REGULATED NAVIGATION AREAS AND LIMITED ACCESS AREAS

■ 1. The authority citation for part 165 continues to read as follows:

Authority: 33 U.S.C. 1226, 1231; 46 U.S.C. Chapter 701, 50 U.S.C. 191, 195; 33 CFR 1.05–1(g), 6.04–1, 6.04–6, and 160.5; Pub. L. 107–295, 116 Stat. 2064; Department of Homeland Security Delegation No. 0170.1.

■ 2. A new temporary § 165.T07–171 is added to read as follows:

§ 165.T07–171 Security Zone; Charleston Harbor, Cooper River, South Carolina.

(a) *Regulated area.* The Coast Guard is establishing a temporary fixed security zone on all waters of the Cooper River, from bank to bank, under the Don Holt I–526 Bridge to the entrance of Foster Creek.

(b) *Regulations.* In accordance with the general regulations § 165.33 of this part, vessels are prohibited from entering, transiting, mooring, anchoring, or loitering within this zone unless specifically authorized by the Captain of the Port Charleston, South Carolina or his designated representative.

(c) *Effective period.* This section is effective from 8 a.m. on December 10, 2003, until 8 a.m. on June 1, 2004.

Dated: December 1, 2003.

Gary W. Merrick,

Commander, U. S. Coast Guard, Captain of the Port.

[FR Doc. 03–32079 Filed 12–30–03; 8:45 am]

BILLING CODE 4910–15–P

DEPARTMENT OF EDUCATION

34 CFR Parts 674, 682, and 685

RIN 1840–AC84

Federal Perkins Loan Program, Federal Family Education Loan Program, and William D. Ford Federal Direct Loan Program

AGENCY: Office of Postsecondary Education, Department of Education.

ACTION: Final rule.

SUMMARY: This document contains technical corrections to the regulations governing the Federal Perkins Loan (Perkins) Program, the Federal Family Education Loan (FFEL) Program, and the William D. Ford Federal Direct Loan (Direct Loan) Program. These amendments are needed to correct technical errors in the regulations, remove or modify language in the regulations that is now obsolete or outdated due to prior changes to the Higher Education Act of 1965, as amended (HEA), and the regulations, and where appropriate, provide consistent language in the regulations for the three loan programs.

EFFECTIVE DATE: These regulations are effective January 30, 2004.

FOR FURTHER INFORMATION CONTACT: For the Perkins and FFEL programs: Mr. Brian Smith, U.S. Department of Education, 1990 K Street, NW., (8th Floor) Washington, DC 20006, Telephone: (202) 502–7551, or via the Internet: *Brian.Smith@ed.gov.*

For the Direct Loan Program: Ms. Nicki Meoli, U.S. Department of Education, 1990 K Street, NW., (8th Floor) Washington, DC 20006, Telephone: (202) 377–4031, or via the Internet: *Nicki.Meoli@ed.gov.*

If you use a telecommunications device for the deaf (TDD), you may call the Federal Information Relay Service (FIRS) at 1–800–877–8339.

Individuals with disabilities may obtain this document in an alternative format (*e.g.*, Braille, large print, audiotape, or computer diskette) on request to one of the contact persons listed under **FOR FURTHER INFORMATION CONTACT.**

SUPPLEMENTARY INFORMATION: These final regulations make technical corrections to the existing regulations for the Perkins, FFEL, and Direct Loan programs in 34 CFR parts 674, 682, and 685. The existing regulations contain technical errors, erroneous cross-references, and language that is inconsistent with other regulations and the provisions of the HEA. These final regulations make the technical corrections, correct the cross-references, and remove or modify language that is obsolete, outdated, or otherwise inconsistent with other regulations and the HEA.

Waiver of Proposed Rulemaking and Negotiated Rulemaking

Under the Administrative Procedure Act (5 U.S.C. 553), the Department generally offers interested parties the opportunity to comment on proposed regulations. However, these regulations merely reflect needed technical corrections to the Perkins, FFEL, and Direct Loan program regulations. These corrections do not affect the substantive rights or obligations of individuals or institutions and do not establish or affect substantive policy. Thus, the Secretary has concluded that these regulations are technical in nature and do not necessitate public comment. Therefore, under 5 U.S.C. 553(b)(B), the Secretary has determined that proposed regulations (and, accordingly, negotiated rulemaking under section 492(b)(2) of the HEA) are unnecessary and contrary to the public interest.

Regulatory Flexibility Act Certification

The Secretary certifies that these regulations will not have a significant economic impact on a substantial number of small entities. The small entities that are affected by these regulations are small institutions of higher education. These regulations also affect lenders and guaranty agencies that participate in the title IV, HEA programs, and individual loan borrowers. These regulations contain technical corrections to current regulations. The changes will not have a significant economic impact on any of the entities affected.

Paperwork Reduction Act of 1995

These regulations do not contain any information collection requirements.

Assessment of Educational Impact

Based on our own review, we have determined that these final regulations do not require transmission of information that any other agency or authority of the United States gathers or makes available.

Electronic Access to This Document

You may view this document, as well as all other Department of Education documents published in the **Federal Register**, in text or Adobe Portable Document Format (PDF) on the Internet at the following site: *www.ed.gov/news/fedregister.*

To use PDF you must have Adobe Acrobat Reader, which is available free at this site. If you have questions about using PDF, call the U.S. Government Printing Office (GPO), toll free, at 1–888–293–6498; or in the Washington, DC, area at (202) 512–1530.

You may also view this document in PDF at the following site: *ifap.ed.gov.*

Note: The official version of this document is the document published in the **Federal Register**. Free Internet access to the official edition of the **Federal Register** and the Code of Federal Regulations is available on GPO Access at: *http://www.gpoaccess.gov/nara/index.html.*

(Catalog of Federal Domestic Assistance Numbers: 84.032 Federal Family Education Loan Program; 84.038 Federal Perkins Loan Program; and 84.268 William D. Ford Federal Direct Loan Program)

List of Subjects in 34 CFR Parts 674, 682, and 685

Administrative practice and procedure, Colleges and universities, Education, Loan programs-education, Reporting and recordkeeping requirements, Student aid, Vocational education.

Dated: December 23, 2003.

Sally L. Stroup,

Assistant Secretary, Office of Postsecondary Education.

■ For the reasons discussed in the preamble, the Secretary amends title 34 of the Code of Federal Regulations parts 674, 682, and 685 as follows:

PART 674—FEDERAL PERKINS LOAN PROGRAM

■ 1. The authority citation for part 674 continues to read as follows:

Authority: 20 U.S.C. 1087aa-1087hh and 20 U.S.C. 421–429, unless otherwise noted.

■ 2. Section 674.5 is amended by:

■ A. In paragraph (c)(3)(i)(D), adding the word ''or'' after the semi-colon.

■ B. In paragraph (c)(3)(i)(E), removing ''; or'' and adding, in its place, a period.

■ C. Removing paragraph (c)(3)(i)(F).

■ D. In paragraph (c)(3)(ii)(C), removing the word ''or''.

■ E. In paragraph (c)(3)(ii)(D), removing the period and adding, in its place, ''; or''.

■ F. Adding a new paragraph (c)(3)(ii)(E).

■ The addition reads as follows:

§ 674.5 Federal Perkins Loan program cohort default rate and penalties.

* * * * *

(c) * * *

(3) * * *

(ii) * * *

(E) Assigned to and conditionally discharged by the Secretary in accordance with § 674.61(b).

* * * * *

■ 3. Section 674.61 is amended by revising the section heading to read as follows:

§ 674.61 Discharge for death or disability.

* * * * *

PART 682—FEDERAL FAMILY EDUCATION LOAN (FFEL) PROGRAM

■ 4. The authority citation for part 682 continues to read as follows:

Authority: 20 U.S.C. 1071 to 1087–2, unless otherwise noted.

§ 682.102 [Amended]

■ 5. Section 682.102(e)(1) is amended by removing from the last sentence the words ''nursing professions or perform certain kinds of national or community service'', and adding, in their place, the words ''child care professions''.

■ 6. Section 682.201 is amended by revising paragraphs (b)(1)(vi) and (vii) and (b)(2), removing paragraph (b)(1)(viii), and adding paragraph (b)(3) to read as follows:

§ 682.201 Eligible borrowers.

* * * * *

(b) * * *

(1) * * *

(vi) Meets the requirements of paragraphs (a)(4), (a)(5), (a)(6), and (a)(7) of this section, as applicable; and

(vii) In the case of a Federal PLUS loan made on or after July 1, 1993, does not have an adverse credit history or obtains an endorser who has been determined not to have an adverse credit history as provided in paragraph (b)(2)(ii) of this section.

(2)(i) For purposes of this section, the lender must obtain a credit report on each applicant from at least one national credit bureau. The credit report must be secured within a timeframe that would ensure the most accurate, current representation of the borrower's credit history before the first day of the period of enrollment for which the loan is intended.

(ii) Unless the lender determines that extenuating circumstances existed, the lender must consider each applicant to have an adverse credit history based on the credit report if—

(A) The applicant is considered 90 or more days delinquent on the repayment of a debt; or

(B) The applicant has been the subject of a default determination, bankruptcy discharge, foreclosure, repossession, tax lien, wage garnishment, or write-off of a Title IV debt, during the five years preceding the date of the credit report.

(iii) Nothing in this paragraph precludes the lender from establishing more restrictive credit standards to determine whether the applicant has an adverse credit history.

(iv) The absence of any credit history is not an indication that the applicant has an adverse credit history and is not to be used as a reason to deny a PLUS loan to that applicant.

(v) The lender must retain a record of its basis for determining that extenuating circumstances existed. This record may include, but is not limited to, an updated credit report, a statement from the creditor that the borrower has made satisfactory arrangements to repay the debt, or a satisfactory statement from the borrower explaining any delinquencies with outstanding balances of less than $500.

(3) For purposes of paragraph (b)(1) of this section, a ''parent'' includes the individuals described in the definition of ''parent'' in 34 CFR 668.2 and the spouse of a parent who remarried, if that spouse's income and assets would have been taken into account when calculating a dependent student's expected family contribution.

* * * * *

■ 7. Section 682.206 is amended by revising paragraph (e)(1) to read as follows:

§ 682.206 Due diligence in making a loan.

* * * * *

(e) * * *

(1) A FFEL Program loan must be made without security or endorsement, except as provided in paragraph (e)(2) of this section.

* * * * *

■ 8. Section 682.207 is amended by:

■ A. Removing paragraph (b)(1)(vi) immediately following paragraph (b)(1)(iii).

■ B. Adding a paragraph (b)(1)(iv).

■ C. In paragraph (b)(1)(v)(B)(*1*), in the first sentence, removing the word ''a'' and adding, in its place, the word ''an''.

■ D. In paragraph (b)(1)(vi), removing the reference to ''(f)(1)'' and adding, in its place, the reference ''(f)''.

■ E. Adding a paragraph (b)(2).

The additions read as follows:

§ 682.207 Due diligence in disbursing a loan.

* * * * *

(b) * * *

(1) * * *

(iv) Shall require an escrow agent to disburse loan proceeds no later than 21 days after the agent receives the proceeds from the lender.

* * * * *

(2) Except as provided in paragraph (b)(1)(v)(C)(*2*) of this section, neither a lender nor a school may obtain a borrower's power-of-attorney or other authorization to endorse or otherwise approve the cashing of a loan check or the release of funds disbursed by electronic funds transfer, nor may a borrower provide this power-of-attorney or authorization to anyone else. However, the school may present the loan check to a financial institution for deposit in an account of the borrower pursuant to the borrower's endorsement or written certification under paragraph (b)(1)(ii)(A) of this section.

* * * * *

■ 9. Section 682.209 is amended by:

■ A. In paragraph (a)(2)(v), removing the reference to ''(a)(2)(i)'' and adding, in its place, the reference to ''(a)(2)(ii)''.

■ B. Revising paragraph (a)(3)(ii)(B).

The revision reads as follows:

§ 682.209 Repayment of a loan.

(a) * * *

(3) * * *

(ii) * * *

(B) 60 days from the expiration of a deferment or forbearance period;

* * * * *

§ 682.210 [Amended]

■ 10. Section 682.210 is amended in paragraph (c)(5), by adding the word ''or'' after the first occurrence of the word ''internship''.

■ 11. Section 682.211 is amended by:
■ A. In paragraph (a)(4), removing the reference to ''(f)(9)'' and adding, in its place, the reference to ''(f)(10)''.
■ B. Revising paragraph (f)(3).
■ C. In paragraph (f)(4), removing the period and adding, in its place, a semi-colon.
■ D. In paragraph (f)(7), removing the word ''or'' after the semi-colon.
■ E. In paragraph (f)(8), removing the period and adding, in its place, a semi-colon.
■ F. In paragraph (f)(9), removing the figure ''45'' and adding, in its place, the figure ''60''; and removing the period and adding, in its place, a semi-colon.
■ G. In paragraph (f)(10), removing the period at the end of the last sentence and adding, in its place, ''; or''.

The revision reads as follows:

§ 682.211 Forbearance.

* * * * *

(f) * * *

(3) For the period beginning when the borrower entered repayment without the lender's knowledge until the first payment due date was established;

* * * * *

§ 682.213 [Amended]

■ 12. Section 682.213 is amended, in the first sentence, by removing the word ''principle'' and adding, in its place, the word ''principal''.

■ 13. Section 682.302 is amended by revising paragraph (b)(1) to read as follows:

§ 682.302 Payment of special allowance on FFEL loans.

* * * * *

(b) * * *

(1) Except for nonsubsidized Federal Stafford loans disbursed on or after October 1, 1981, for periods of enrollment beginning prior to October 1, 1992, FFEL loans that otherwise meet program requirements are eligible for special allowance payments as provided in paragraphs (b)(2), (b)(3), and (e) of this section.

* * * * *

§ 682.401 [Amended]

■ 14. Section 682.401 is amended by:
■ A. In paragraph (b)(6)(i), removing the reference to ''§ 682.600'' and adding, in its place, the reference to ''§ 668.14(a)''.
■ B. In paragraph (e), in the introductory sentence, removing the word ''be'' and adding, in its place, the word ''not''.

§ 682.402 [Amended]

■ 15. Section 682.402 is amended by:
■ A. In paragraph (k)(5)(i), removing the word ''dies'' and adding, in its place, the word ''died''.
■ B. In paragraph (r)(1), in the first sentence, removing the word ''as'' and adding, in its place, the word ''has''.

■ 16. Section 682.405 is amended by revising paragraph (b)(3) to read as follows:

§ 682.405 Loan rehabilitation agreement.

* * * * *

(b) * * *

(3) An eligible lender purchasing a rehabilitated loan must establish a repayment schedule that meets the same requirements that are applicable to other FFEL Program loans made under the same loan type and provides for the borrower to make monthly payments at least as great as the average of the 12 consecutive monthly payments received by the guaranty agency. The lender must treat the first payment made under the 12 consecutive payments as the first payment under the applicable maximum repayment term, as defined under § 682.209(a) or (h). For Consolidation loans, the maximum repayment term is based on the balance outstanding at the time of loan rehabilitation.

§ 682.410 [Amended]

■ 17. Section 682.410(c)(1)(i)(B) is amended by removing the words ''as defined in § 682.800(d)''.

§ 682.415 [Amended]

■ 18. Section 682.415 is amended by:
■ A. In paragraph (c)(2)(i), removing the reference to ''§§ 682.410(b)(6)(i) through (xii)'' and adding, in its place, the reference to ''§§ 682.410(b)(6)(i) through (vi)''.
■ B. In paragraph (c)(4), in the first sentence, removing the reference to ''§§ 682.410(b)(6)(i) through (xii)'' and adding, in its place, the reference to ''§§ 682.410(b)(6)(i) through (vi)''.
■ C. In paragraph (c)(6)(i), in the first sentence, removing the reference to ''§§ 682.410(b)(6)(i) through (xii)'' and adding, in its place, the reference to ''§§ 682.410(b)(6)(i) through (vi)''.
■ D. In paragraph (d)(1), removing the reference to ''§§ 682.410(b)(6)(i) through (xii)'' and adding, in its place, the reference to ''§§ 682.410(b)(6)(i) through (vi)''.

§ 682.505 [Amended]

■ 19. Section 682.505 is amended by:
■ A. Revising the paragraph immediately after paragraph (b), by adding ''(c)'' before the heading ''FISL loans—insurance premium calculation.''.
■ B. Revising the paragraph immediately after paragraph (e)(2)(ii), by adding ''(f)'' before the heading ''Collection from borrowers.''.

§ 682.603 [Amended]

■ 20. Section 682.603(e) is amended, in the introductory sentence, by removing the word ''student'' and adding, in its place, the word ''borrower''.

■ 21. Section 682.604 is amended by:
■ A. Revising paragraph (b)(2)(i).
■ B. In paragraph (d)(4), revising the introductory sentence.
■ C. In paragraph (g)(2)(iv), removing the reference to ''paragraph (f)(2)'' and adding, in its place, the reference to ''paragraphs (f)(2)(i) through (f)(2)(iv)''.

The revisions read as follows:

§ 682.604 Processing the borrower's loan proceeds and counseling borrowers.

* * * * *

(b) * * *

(2) * * *

(i) Except in the case of a late disbursement under paragraph (e) of this section or as provided in paragraph (b)(2)(iii) or (iv) of this section, a school may release the proceeds of any disbursement of a loan only to a student, or a parent in the case of a PLUS loan, if the school determines the student has continuously maintained eligibility in accordance with the provisions of § 682.201 from the beginning of the loan period for which the loan was intended.

* * * * *

(d) * * *

(4) If the school is unable for any other reason to document that a registered student attended school during the period of enrollment for which the loan is made, the school must determine the student's withdrawal date as required under § 682.605, and by the deadline described in § 682.607(c), shall notify the lender of the student's withdrawal, expulsion, or failure to attend school, if applicable, and return to the lender—

* * * * *

PART 685—WILLIAM D. FORD FEDERAL DIRECT LOAN PROGRAM

■ 22. The authority citation for part 685 continues to read as follows:

Authority: 20 U.S.C. 1087a *et seq.*, unless otherwise noted.

§ 685.102 [Amended]

■ 23. Section 685.102(b)(2)(i)(A) is amended to revise the definition of ''Estimated financial assistance'' by removing the words ''Direct PLUS Loan amounts'' and adding, in their place, the words ''PLUS loan amounts''.

§ 685.200 [Amended]

■ 24. Section 685.200 is amended by:

■ A. In paragraph (a)(1)(iv)(C)(2), removing the words ''requirement in paragraph (a)(1)(iv)(A)(1)'' and adding, in their place, the words ''requirements in paragraphs (a)(1)(iv)(A)(*1*) and (*2*)''.

■ B. In paragraph (a)(1)(iv)(C)(*3*), removing the words ''neither the prior loan nor the Direct Loan that the borrower receives may'' and adding, in their place, the words ''the loan that has been conditionally discharged prior to a final determination of total and permanent disability cannot''.

§ 685.203 [Amended]

■ 25. Section 685.203(b) is amended by removing the words ''Federal Unsubsidized Stafford/Ford Loan Program'' and adding, in their place, the words ''Federal Unsubsidized Stafford Loan Program''.

§ 685.205 [Amended]

■ 26. Section 685.205(b)(3) is amended by adding the words ''without the Secretary's knowledge'' after the word ''repayment''.

■ 27. Section 685.207 is amended by revising paragraph (f) to read as follows:

§ 685.207 Obligation to repay.

* * * * *

(f) *Determining the date on which the grace period begins for a borrower in a correspondence program.* For a borrower of a Direct Subsidized or Direct Unsubsidized Loan who is a correspondence student, the grace period specified in paragraphs (b)(2) and (c)(2) of this section begins on the earliest of—

(1) The day after the borrower completes the program;

(2) The day after withdrawal as determined pursuant to 34 CFR 668.22; or

(3) 60 days following the last day for completing the program as established by the school.

§ 685.210 [Amended]

■ 28. Section 685.210(b)(1) is amended, in the second sentence, by removing the reference to ''§ 685.211(c)(3)(ii)'' and adding, in its place, the reference to ''§ 685.211(d)(3)(ii)''.

§ 685.220 [Amended]

■ 29. Section 685.220 is amended by:

■ A. In paragraph (b)(1), adding the word ''Subsidized'' after the word ''Federal''.

■ B. In paragraph (d)(1)(ii)(F), removing the reference to ''§ 685.209(d)(5)'' and adding, in its place, the reference to ''§ 685.209(c)(7)''.

■ C. In paragraph (h)(2), removing the reference to ''(d)(1)(ii)(E)'' and adding, in its place, the reference to ''(d)(1)(ii)(F)''.

§ 685.301 [Amended]

■ 30. Section 685.301 is amended by:

■ A. In paragraph (a)(4)(i), adding a period after''§ 685.203'' and removing the remainder of the sentence.

■ B. In paragraph (a)(7), removing the word ''student'' and adding, in its place, the word ''borrower''.

§ 685.302 [Removed and Reserved]

■ 31. Section 685.302 is removed and reserved.

§ 685.303 [Amended]

■ 32. Section 685.303 is amended in paragraph (b)(2)(i) by removing the words ''described in the promissory note'' and adding, in their place, the words ''for which the loan was intended''.

[FR Doc. 03–32062 Filed 12–30–03; 8:45 am]

BILLING CODE 4000–01–U

ENVIRONMENTAL PROTECTION AGENCY

40 CFR Part 180

[OPP–2003–0377; FRL–7340–5]

Fluroxypyr; Pesticide Tolerance

AGENCY: Environmental Protection Agency (EPA).

ACTION: Final rule.

SUMMARY: This regulation establishes tolerances for residues of fluroxypyr in or on field corn, sweet corn, sorghum, range and pasture grass. Dow AgroSciences LLC requested this tolerance under the Federal Food, Drug, and Cosmetic Act (FFDCA), as amended by the Food Quality Protection Act of 1996 (FQPA).

DATES: This regulation is effective December 31, 2003. Objections and requests for hearings, identified by docket ID number OPP–2003–0377, must be received on or before March 1, 2004.

ADDRESSES: Written objections and hearing requests may be submitted electronically, by mail, or through hand delivery/courier. Follow the detailed instructions as provided in Unit VI. of the **SUPPLEMENTARY INFORMATION.**

FOR FURTHER INFORMATION CONTACT: Joanne I. Miller, Registration Division (7505C), Office of Pesticide Programs, Environmental Protection Agency, 1200 Pennsylvania Ave., NW.,Washington, DC 20460–0001; telephone number: (703)305–6224; e-mail address: *miller.joanne@epa.gov*.

SUPPLEMENTARY INFORMATION:

I. General Information

A. Does this Action Apply to Me?

You may be potentially affected by this action if you are an agricultural producer, food manufacturer, or pesticide manufacturer. Potentially affected entities may include, but are not limited to:

- Crop production (NAICS 111), e.g., Agricultural workers; Greenhouse, nursery, and floriculture workers; Farmers.
- Animal production (NAICS 112), e.g., Cattle ranchers and farmers, Dairy cattle farmers, Livestock farmers.
- Food manufacturing (NAICS 311), e.g., Agricultural workers; Farmers; Greenhouse, nursery, and floriculture workers; Ranchers; Pesticide applicators.
- Pesticide manufacturing (NAICS 32532), e.g., Agricultural workers; Commercial applicators; Farmers; Greenhouse, nursery, and floriculture workers; Residential users.

This listing is not intended to be exhaustive, but rather provides a guide for readers regarding entities likely to be affected by this action. Other types of entities not listed in this unit could also be affected. The North American Industrial Classification System (NAICS) codes have been provided to assist you and others in determining whether this action might apply to certain entities. If you have any questions regarding the applicability of this action to a particular entity, consult the person listed under **FOR FURTHER INFORMATION CONTACT**.

B. How Can I Get Copies of this Document and Other Related Information?

1. *Docket.* EPA has established an official public docket for this action under docket identification (ID) number OPP–2003–0377. The official public docket consists of the documents specifically referenced in this action, any public comments received, and other information related to this action. Although a part of the official docket, the public docket does not include Confidential Business Information (CBI) or other information whose disclosure is restricted by statute. The official public docket is the collection of materials that is available for public viewing at the Public Information and Records Integrity Branch (PIRIB), Rm. 119, Crystal Mall # 2, 1921 Jefferson Davis Hwy., Arlington, VA. This docket facility is open from 8:30 a.m. to 4 p.m.,

Monday through Friday, excluding legal holidays. The docket telephone number is (703) 305–5805.

2. *Electronic access*. You may access this **Federal Register** document electronically through the EPA Internet under the ''**Federal Register**'' listings at *http://www.epa.gov/fedrgstr/*.A frequently updated electronic version of 40 CFR part 180 is available at *http://www.access.gpo.gov/nara/cfr/cfrhtml_00/Title_40/40cfr180_00.html/*, a beta site currently under development. To access the OPPTS Harmonized Guidelines referenced in this document, go directly to the guidelines at *http://www.epa.gov/opptsfrs/home/guidelin.htm/*.

An electronic version of the public docket is available through EPA's electronic public docket and comment system, EPA Dockets. You may use EPA Dockets at *http://www.epa.gov/edocket/* to submit or view public comments, access the index listing of the contents of the official public docket, and to access those documents in the public docket that are available electronically. Although not all docket materials may be available electronically, you may still access any of the publicly available docket materials through the docket facility identified in Unit I.B.1. Once in the system, select ''search,'' then key in the appropriate docket ID number.

II. Background and Statutory Findings

In the **Federal Register** of May 14, 2003 (68 FR 25883) (FRL–7301–3), EPA issued a notice pursuant to section 408 of FFDCA, 21 U.S.C. 346a, as amended by FQPA (Public Law 104–170), announcing the filing of a pesticide petition (PP 9F6050) by Dow AgroSciences LLC, 9330 Zionville Road, Indianapolis, IN 46268. That notice included a summary of the petition prepared by Dow AgroSciences LLC, the registrant. There were no comments received in response to the notice of filing.

The petition requested that 40 CFR 180.535 be amended by establishing tolerances for combined residues of the herbicide fluroxypyr 1-methylheptyl ester [((4-amino-3,5-dichloro-6-fluoro-2-pyridinyl)oxy) acetic acid, 1-methylheptyl] and its metabolite fluroxypyr [((4-amino-3,5-dichloro-6-fluoro-2-pyridinyl)oxy) acetic acid], free and conjugated, all expressed as fluroxypyr, in or on the following raw agricultural commodities: Sweet corn at 0.02 parts per million (ppm) for kernels plus cob with husk removed, and forage and stover at 1.0 ppm. Tolerances for residues of fluroxypyr in or on field corn are being proposed in support of this registration as follows: grain, 0.02 ppm; forage, 1.0 ppm; and stover, 0.5 ppm. Tolerances for residues of fluroxypyr in or on sorghum as follows: Grain, 0.02 ppm; forage, 2.0 ppm; and stover, 4.0 ppm. Tolerances for residues of fluroxypyr in or on grasses as follows: Forage, 120 ppm; hay, 160 ppm; and grass silage, 100 ppm. Increased tolerances are also proposed for fluroxypyr in or on the following animal commodities: Milk of cattle, goats, hogs, horses and sheep at 0.3 ppm; and kidney of cattle, goats, hogs, horses and sheep at 1.5 ppm.

Section 408(b)(2)(A)(i) of FFDCA allows EPA to establish a tolerance (the legal limit for a pesticide chemical residue in or on a food) only if EPA determines that the tolerance is ''safe.'' Section 408(b)(2)(A)(ii) of FFDCA defines ''safe'' to mean that''there is a reasonable certainty that no harm will result from aggregate exposure to the pesticide chemical residue, including all anticipated dietary exposures and all other exposures for which there is reliable information.'' This includes exposure through drinking water and in residential settings, but does not include occupational exposure. Section 408(b)(2)(C) of FFDCA requires EPA to give special consideration to exposure of infants and children to the pesticide chemical residue in establishing a tolerance and to ''ensure that there is a reasonable certainty that no harm will result to infants and children from aggregate exposure to the pesticide chemical residue....''

EPA performs a number of analyses to determine the risks from aggregate exposure to pesticide residues. For further discussion of the regulatory requirements of section 408 of FFDCA and a complete description of the risk assessment process, see the final rule on Bifenthrin Pesticide Tolerances (62 FR 62961, November 26, 1997) (FRL–5754–7).

III. Aggregate Risk Assessment and Determination of Safety

Consistent with section 408(b)(2)(D) of FFDCA, EPA has reviewed the available scientific data and other relevant information in support of this action. EPA has sufficient data to assess the hazards of and to make a determination on aggregate exposure, consistent with section 408(b)(2) of FFDCA, for tolerances for combined residues of fluroxypyr on or in field corn, grain at 0.02 ppm; field corn, forage at 1.0 ppm; field corn, stover at 0.5 ppm; on or in sweet corn, kernels plus cob with husks removed at 0.02 ppm; sweet corn, forage at 1.0 ppm; sweet corn, stover at 2.0 ppm; on or in sorghum, grain at 0.02 ppm; sorghum, forage at 2.0 ppm; sorghum, stover (fodder) at 4.0 ppm; on or in grass, forage at 120 ppm; grass, hay at 160 ppm; and a tolerance for combined residues of fluroxypyr on cattle, milk; goat, milk; hog, milk; horse, milk; and sheep, milk at 0.3 ppm; and on cattle, kidney; goat, kidney; hog, kidney; horse, kidney; and sheep, kidney at 1.5 ppm. EPA's assessment of exposures and risks associated with establishing the tolerance follows.

A. Toxicological Profile

EPA has evaluated the available toxicity data and considered its validity, completeness, and reliability as well as the relationship of the results of the studies to human risk. EPA has also considered available information concerning the variability of the sensitivities of major identifiable subgroups of consumers, including infants and children. The nature of the toxic effects caused by fluroxypyr are discussed in Table 1 of this unit as well as the no-observed-adverse-effect-level (NOAEL) and the lowest-observed-adverse-effect-level (LOAEL) from the toxicity studies reviewed.

TABLE 1.—SUBCHRONIC, CHRONIC, AND OTHER TOXICITY

Guideline No.	Study Type	Results
870.3100	90–Day oral toxicity—Rats	NOAEL = 700 milligram/kilogram/day (mg/kg/day) LOAEL = 1,000 mg/kg/day based on decreased body weight gain & testis weight (M), decreased brain weight (F), and increased kidney weight (M/F).
870.3100	90–Day oral toxicity—Mice	NOAEL = 1,342 mg/kg/day (Males)/ 1,748 mg/kg/day (Females) LOAEL not established.

TABLE 1.—SUBCHRONIC, CHRONIC, AND OTHER TOXICITY—Continued

Guideline No.	Study Type	Results
870.3200	21/28–Day dermal toxicity	NOAEL = 1,000 mg/kg/day LOAEL not established
870.3700	Prenatal developmental—Rodents	Maternal NOAEL = 300 mg/kg/day LOAEL = 600 mg/kg/day based on increased maternal deaths and decreased body weight gains and food consumption. Developmental NOAEL = 600 mg/kg/day LOAEL not established.
870.3700	Prenatal developmental—Nonrodents	Maternal NOAEL = 500 mg/kg/day LOAEL = 1,000 mg/kg/day based on increased abortions. Developmental NOAEL = 500 mg/kg/day LOAEL = 1,000 mg/kg/day based on increased abortions.
870.3800	Reproduction and fertility effects	Parental/Systemic NOAEL = 100 mg/kg/day (Males) / 500 mg/kg/day (Females) LOAEL = 500 mg/kg/day (Males) / 1,000 mg/kg/day (Females), based on kidney effects (M&F) and increased deaths (F). Reproductive NOAEL = 750 mg/kg/day (Males) / 1,000 mg/kg/day (Females). LOAEL not established. Offspring NOAEL = 500 mg/kg/day LOAEL = 1,000 mg/kg/day based on decreased pup weight and body weight gain and slightly lower survival.
870.4100	Chronic toxicity—Dogs	NOAEL = 150 mg/kg/day LOAEL not established.
870.4200	Carcinogenicity—Mice	NOAEL = 300 mg/kg/day (Males/Females) LOAEL = 1,000 mg/kg/day based on decreased body weight and body weight gain (M) and increased kidney lesions (F).(no) evidence of carcinogenicity
870.4300	Carcinogenicity—Rats	NOAEL = 100 mg/kg/day LOAEL = 500 mg/kg/day based on chronic progressive kidney glomerulonephropathy (M&F).(no) evidence of carcinogenicity
870.5100	Bacterial reverse mutation	Negative.
870.5300	*In vitro* mammalian cell gene mutation	Negative, but did not test a soluble dose.
870.5375	*In vitro* mammalian chromosome aberration (HL)	Negative.
870.5395	Mammalian micronucleus (mouse)	Negative.
870.7485	Metabolism and pharmacokinetics	Total recovery of the administered dose was 105%, with the principal route of excretion being expired $14CO_2$, which contained approximately 61% of the radioactivity for the fluroxypyr MHE. The urine contained approximately 30% and the feces contained 5% of the administered dose. At 48 hours post dose, approximately 7% of the administered dose was recovered in the blood, carcass, and skin. Approximately 52% of the administered dose was absorbed and expired as $14CO_2$ within 12 hours post dose, and an additional 18% of the administered dose was excreted in the urine within 12 hours post dose. Based on the percentage of dose in the expired $14CO_2$, urine, and tissues, approximately 90% of the dose was absorbed. Once absorbed, it was extensively metabolized and rapidly expired as $14CO_2$ and eliminated in the urine with a half-life of 6 hours. Peak plasma concentrations of 14C-radioactivity were attained by 7 hours post dose.

B. Toxicological Endpoints

The dose at which no adverse effects are observed (the NOAEL) from the toxicology study identified as appropriate for use in risk assessment is used to estimate the toxicological level of concern (LOC). However, the lowest dose at which adverse effects of concern are identified (the LOAEL) is sometimes used for risk assessment if no NOAEL was achieved in the toxicology study selected. An uncertainty factor (UF) is applied to reflect uncertainties inherent in the extrapolation from laboratory animal data to humans and in the variations in sensitivity among members of the human population as well as other unknowns. An UF of 100 is routinely used, 10X to account for interspecies differences and 10X for intraspecies differences.

Three other types of safety or uncertainty factors may be used: ''Traditional uncertainty factors;'' the

''special FQPA safety factor;'' and the ''default FQPA safety factor.'' By the term ''traditional uncertainty factor,'' EPA is referring to those additional uncertainty factors used prior to FQPA passage to account for database deficiencies. These traditional uncertainty factors have been incorporated by the FQPA into the additional safety factor for the protection of infants and children. The term ''special FQPA safety factor'' refers to those safety factors that are deemed necessary for the protection of infants and children primarily as a result of the FQPA. The ''default FQPA safety factor'' is the additional 10X safety factor that is mandated by the statute unless it is decided that there are reliable data to choose a different additional factor (potentially a traditional uncertainty factor or a special FQPA safety factor).

For dietary risk assessment (other than cancer) the Agency uses the UF to calculate an acute or chronic reference dose (acute RfD or chronic RfD) where the RfD is equal to the NOAEL divided by an UF of 100 to account for interspecies and intraspecies differences and any traditional uncertainty factors deemed appropriate (RfD = NOAEL/UF). Where a special FQPA safety factor or the default FQPA safety factor is used, this additional factor is applied to the RfD by dividing the RfD by such additional factor. The acute or chronic Population Adjusted Dose (aPAD or cPAD) is a modification of the RfD to accommodate this type of safety factor.

For non-dietary risk assessments (other than cancer) the UF is used to determine the LOC. For example, when 100 is the appropriate UF (10X to account for interspecies differences and 10X for intraspecies differences) the LOC is 100. To estimate risk, a ratio of the NOAEL to exposures (margin of exposure (MOE) = NOAEL/exposure) is calculated and compared to the LOC.

The linear default risk methodology (Q*) is the primary method currently used by the Agency to quantify carcinogenic risk. The Q* approach assumes that any amount of exposure will lead to some degree of cancer risk. A Q* is calculated and used to estimate risk which represents a probability of occurrence of additional cancer cases (e.g., risk). An example of how such a probability risk is expressed would be to describe the risk as one in one hundred thousand (1×10^{-5}), one in a million (1×10^{-6}), or one in ten million (1×10^{-7}). Under certain specific circumstances, MOE calculations will be used for the carcinogenic risk assessment. In this non-linear approach, a ''point of departure'' is identified below which carcinogenic effects are not expected. The point of departure is typically a NOAEL based on an endpoint related to cancer effects though it may be a different value derived from the dose response curve. To estimate risk, a ratio of the point of departure to exposure (MOE_{cancer} = point of departure/exposures) is calculated.

A summary of the toxicological endpoints for fluroxypyr used for human risk assessment is shown in Table 2 of this unit:

TABLE 2.—SUMMARY OF TOXICOLOGICAL DOSE AND ENDPOINTS FOR FLUROXYPYR FOR USE IN HUMAN RISK ASSESSMENT

Exposure Scenario	Dose Used in Risk Assessment, Interspecies and Intraspecies and any Traditional UF	Special FQPA SF and Level of Concern for Risk Assessment	Study and Toxicological Effects
Acute Dietary(All populations)	NOAEL = NA UF = NA Acute RfD = NA	FQPA SF = NA aPAD = acute RfD/ FQPA SF = NA	No appropriate endpoint to quantify single dose exposure.
Chronic Dietary(All populations)	NOAEL= 100 mg/kg/day UF = 100 Chronic RfD =1 mg/kg/day	FQPA SF = 1x cPAD =chronic RfD/ FQPA SF = 1 mg/kg/day	Chronic/Onco-Rat LOAEL = 100 mg/kg/day based on kidney effects.
Short-TermIncidental Oral (1-30 days)	NOAEL= 100 mg/kg/day	Residential LOC for MOE = 100 Occupational = NA	Chronic/Onco-Rat LOAEL = 100 mg/kg/day based on kidney effects.
Intermediate-TermIncidental Oral (1- 6 months)	NOAEL= 100 mg/kg/day	Residential LOC for MOE = 100 Occupational = NA	Chronic/Onco-Rat LOAEL = 100 mg/kg/day based on kidney effects.
Dermal(All durations)	Dermal (or oral) study NOAEL=NA	Residential LOC for MOE = NA Occupational LOC for MOE = NA	Quantification not required since 21-Day dermal rabbit NOAEL = 1,000 mg/kg/day and there is no developmental toxicity concern.
Inhalation(All durations)	Inhalation (or oral) study NOAEL= 100 mg/kg/day (inhalation absorption rate = 100%)	Residential LOC for MOE = 100 Occupational LOC for MOE = 100	Chronic/Onco-Rat LOAEL = 100 mg/kg/day based on kidney effects.
Cancer (oral, dermal, inhalation)	Classification: ''not likely'' human carcinogen		

UF = uncertainty factor, FQPA SF = Special FQPA safety factor, NOAEL = no observed adverse effect level, LOAEL = lowest observed adverse effect level, PAD = population adjusted dose (a = acute, c = chronic) RfD = reference dose, MOE = margin of exposure, LOC = level of concern, NA = Not Applicable

C. Exposure Assessment

1. *Dietary exposure from food and feed uses.* Tolerances have been established (40 CFR 180.535) for the combined residues of fluroxypyr, in or on a variety of raw agricultural commodities. Tolerances have also been established for the combined residues of fluroxypyr on meat and milk. Risk assessments were conducted by EPA to assess dietary exposures from fluroxypyr in food as follows:

i. *Acute exposure.* Acute dietary risk assessments are performed for a food-use pesticide, if a toxicological study has indicated the possibility of an effect of concern occurring as a result of a one-day or single exposure.

No adverse effect attributable to a single exposure (dose) of fluroxypyr was observed in the oral toxicity studies. Therefore, EPA did not identify an acute dietary endpoint and a quantitative acute dietary assessment was not performed because no acute risk is expected.

ii. *Chronic exposure.* In conducting the chronic dietary risk assessment EPA used the Dietary Exposure Evaluation Model software with the Food Commodity Intake Database (DEEM-FCID^{T}), which incorporates food consumption data as reported by respondents in the USDA 1994–1996 and 1998 Nationwide Continuing Surveys of Food Intake by Individuals (CSFII), and accumulated exposure to the chemical for each commodity. The following assumptions were made for the chronic exposure assessments: 100% crop treated (PCT) and tolerance-level residues for fluroxypyr on all treated crops. This assessment was Tier I analysis. The exposures from fluroxypyr residues are below EPA's level of concern (<100% of the chronic population adjusted dose (cPAD)) for the general U.S. population (<1% of the cPAD) and all population subgroups.

iii. *Cancer.* Fluroxypyr is classified as ''not likely'' a human carcinogen and there was no concern for its mutagenicity potential.

2. *Dietary exposure from drinking water.* The Agency lacks sufficient monitoring exposure data to complete a comprehensive dietary exposure analysis and risk assessment for fluroxypyr in drinking water. Because the Agency does not have comprehensive monitoring data, drinking water concentration estimates are made by reliance on simulation or modeling taking into account data on the physical characteristics of fluroxypyr.

The Agency used the Pesticide Root Zone Model/Exposure Analysis Modeling System (PRZM/EXAMS), a Tier 2 model, to estimate pesticide concentrations in surface water. PRZM/EXAMS incorporates an index reservoir environment and includes a percent crop area factor as an adjustment to account for the maximum percent crop coverage within a watershed or drainage basin. The Tier 1 Screening Concentration In Ground Water (SCI-GROW) model is used to predict pesticide concentrations in shallow ground water.

None of these models include consideration of the impact processing (mixing, dilution, or treatment) of raw water for distribution as drinking water would likely have on the removal of pesticides from the source water. The primary use of these models by the Agency at this stage is to provide a screen for sorting out pesticides for which it is unlikely that drinking water concentrations would exceed human health levels of concern.

Since the models used are considered to be screening tools in the risk assessment process, the Agency does not use estimated environmental concentrations (EECs), which are the model estimates of a pesticide's concentration in water. EECs derived from these models are used to quantify drinking water exposure and risk as a %RfD or %PAD. Instead drinking water levels of comparison (DWLOCs) are calculated and used as a point of comparison against the model estimates of a pesticide's concentration in water. DWLOCs are theoretical upper limits on a pesticide's concentration in drinking water in light of total aggregate exposure to a pesticide in food, and from residential uses. Since DWLOCs address total aggregate exposure to fluroxypyr they are further discussed in the aggregate risk sections in Unit III.E.

Based on the PRZM/EXAMS and SCI-GROW models, the EECs of fluroxypyr for acute exposures are estimated to be 32.9 parts per billion (ppb) for surface water and 0.04 ppb for ground water. The EECs for chronic exposures are estimated to be 3.3 ppb for surface water and 0.062 ppb for ground water.

3. *From non-dietary exposure.* The term ''residential exposure'' is used in this document to refer to non-occupational, non-dietary exposure (e.g., for lawn and garden pest control, indoor pest control, termiticides, and flea and tick control on pets).

Fluroxypyr is currently registered for use on the following residential non-dietary sites: Residential turfgrass and recreational sites such as golf courses and sports fields. The risk assessment was conducted using the following residential exposure assumptions: Adults and children may be exposed to fluroxypyr residues from dermal contact with turf during postapplication activities. Toddlers may receive short- and intermediate-term oral exposure from incidental ingestion during postapplication activities. Residential handlers may receive short-term dermal and inhalation exposure to fluroxypyr when mixing, loading and applying the formulations.

4. *Cumulative effects from substances with a common mechanism of toxicity.* Section 408(b)(2)(D)(v) of FFDCA requires that, when considering whether to establish, modify, or revoke a tolerance, the Agency consider ''available information'' concerning the cumulative effects of a particular pesticide's residues and ''other substances that have a common mechanism of toxicity.''

EPA does not have, at this time, available data to determine whether fluroxypyr has a common mechanism of toxicity with other substances. Unlike other pesticides for which EPA has followed a cumulative risk approach based on a common mechanism of toxicity, EPA has not made a common mechanism of toxicity finding as to fluroxypyr and any other substances and fluroxypyr does not appear to produce a toxic metabolite produced by other substances. For the purposes of this tolerance action, therefore, EPA has not assumed that fluroxypyr has a common mechanism of toxicity with other substances. For information regarding EPA's efforts to determine which chemicals have a common mechanism of toxicity and to evaluate the cumulative effects of such chemicals, see the policy statements released by EPA's OPP concerning common mechanism determinations and procedures for cumulating effects from substances found to have a common mechanism on EPA's web site at *http://www.epa.gov/pesticides/cumulative/*.

D. Safety Factor for Infants and Children

1.*In general.* Section 408 of FFDCA provides that EPA shall apply an additional tenfold margin of safety for infants and children in the case of threshold effects to account for prenatal and postnatal toxicity and the completeness of the data base on toxicity and exposure unless EPA determines based on reliable data that a different margin of safety will be safe for infants and children. Margins of safety are incorporated into EPA risk assessments either directly through use of a MOE analysis or through using uncertainty (safety) factors in

calculating a dose level that poses no appreciable risk to humans. In applying this provision, EPA either retains the default value of 10 X when reliable data do not support the choice of a different factor, or, if reliable data are available, EPA uses a different additional safety factor value based on the use of traditional uncertainty factors and/or special FQPA safety factors, as appropriate.

2. *Prenatal and postnatal sensitivity*. There is no evidence of increased susceptibility of rat or rabbit fetuses following in utero exposure in the developmental studies with fluroxypyr. There is no evidence of increased susceptibility of rats in the reproduction study with fluroxypyr. EPA concluded there are no residual uncertainties for prenatal and/or postnatal exposure.

3. *Conclusion*. There is a complete toxicity data base for fluroxypyr and exposure data are complete or are estimated based on data that reasonably accounts for potential exposures. EPA determined that the 10X SF to protect infants and children should be removed and instead, a different additional safety factor of 1X should be used. The FQPA factor is removed because: There is no evidence (quantitative/qualitative) of increased susceptibility following in utero exposure to the acid and the ester of fluroxypyr in rats and rabbits, or following pre and/or postnatal exposure to the acid of fluroxypyr in rats; there are no concerns or residual uncertainties for pre- and/or post-natal toxicity; there is no evidence of neurotoxicity or neuropathology in the available studies; the toxicological database is complete for FQPA assessment; the chronic dietary food exposure assessment utilizes tolerance level residue estimates and assumes 100% CT for all commodities, thus not likely to underestimate exposure/risk; the dietary drinking water assessment utilizes water concentration values generated by model and associated modeling parameters which are designed to provide conservative, health protective, high-end estimates of water concentrations which will not likely be exceeded; and the residential exposure assessment was conducted using standard assumptions which are based on carefully reviewed data.

E. Aggregate Risks and Determination of Safety

To estimate total aggregate exposure to a pesticide from food, drinking water, and residential uses, the Agency calculates DWLOCs which are used as a point of comparison against EECs. DWLOC values are not regulatory standards for drinking water. DWLOCs are theoretical upper limits on a pesticide's concentration in drinking water in light of total aggregate exposure to a pesticide in food and residential uses. In calculating a DWLOC, the Agency determines how much of the acceptable exposure (i.e., the PAD) is available for exposure through drinking water [e.g., allowable chronic water exposure (mg/kg/day) = cPAD - (average food + residential exposure)]. This allowable exposure through drinking water is used to calculate a DWLOC.

A DWLOC will vary depending on the toxic endpoint, drinking water consumption, and body weights. Default body weights and consumption values as used by the EPA's Office of Water are used to calculate DWLOCs: 2 liter (L)/70 kg (adult male), 2L/60 kg (adult female), and 1L/10 kg (child). Default body weights and drinking water consumption values vary on an individual basis. This variation will be taken into account in more refined screening-level and quantitative drinking water exposure assessments. Different populations will have different DWLOCs. Generally, a DWLOC is calculated for each type of risk assessment used: Acute, short-term, intermediate-term, chronic, and cancer.

When EECs for surface water and ground water are less than the calculated DWLOCs, OPP concludes with reasonable certainty that exposures to the pesticide in drinking water (when considered along with other sources of exposure for which OPP has reliable data) would not result in unacceptable levels of aggregate human health risk at this time. Because OPP considers the aggregate risk resulting from multiple exposure pathways associated with a pesticide's uses, levels of comparison in drinking water may vary as those uses change. If new uses are added in the future, OPP will reassess the potential impacts of residues of the pesticide in drinking water as a part of the aggregate risk assessment process.

1. *Acute risk*. A quantitative acute risk assessment was not performed. No adverse effect attributable to a single exposure(dose) of fluroxypyr was observed in the oral toxicity studies and no acute risk is expected.

2. *Chronic risk*. Using the exposure assumptions described in this unit for chronic exposure, EPA has concluded that exposure to fluroxypyr from food will utilize <1% of the cPAD for the U.S. population, <1% of the cPAD for all infants, and 1.4% of the cPAD for children (1-2 years old). In addition, there is potential for chronic dietary exposure to fluroxypyr in drinking water. After calculating DWLOCs and comparing them to the EECs for surface and ground water, EPA does not expect the aggregate exposure to exceed 100% of the cPAD, as shown in Table 3 of this unit. Based upon the use pattern, chronic (non-dietary) residential exposure to residues of fluroxypyr is not expected.

TABLE 3.—AGGREGATE RISK ASSESSMENT FOR CHRONIC (NON-CANCER) EXPOSURE TO FLUROXYPYR

PopulationSubgroup	cPADmg/kg/day	%cPAD(Food)	Surface Water EEC(ppb)	Ground-Water EEC(ppb)	ChronicDWLOC (ppb)
U.S. Population	1	<1	3.3	0.042	35,000
All infants (<1 year old)	1	<1	3.3	0.042	10,000
Children (1-2 years old)	1	1.4	3.3	0.042	9,900

3. *Short-term risk*. Short-term aggregate exposure takes into account residential exposure plus chronic exposure to food and water (considered to be a background exposure level).

Fluroxypyr is currently registered for use that could result in short-term residential exposure and the Agency has determined that it is appropriate to aggregate chronic food and water and short-term exposures for fluroxypyr.

Using the exposure assumptions described in this unit for short-term exposures, EPA has concluded that food and residential exposures aggregated result in aggregate MOEs of 31,000 for the U.S. population and 4,500 for children (1-2 years old). These aggregate MOEs do not exceed the Agency's level of concern for aggregate exposure to food and residential uses. In addition,

short-term DWLOCs were calculated and compared to the EECs for chronic exposure of fluroxypyr in ground and surface water. After calculating DWLOCs and comparing them to the EECs for surface and ground water, EPA does not expect short-term aggregate exposure to exceed the Agency's level of concern, as shown in Table 4 of this unit:

TABLE 4.—AGGREGATE RISK ASSESSMENT FOR SHORT-TERM EXPOSURE TO FLUROXYPYR

PopulationSubgroup	AggregateMOE(Food + Residential)	Aggregate Level of Con-cern(LOC)	Surface Water EEC(ppb)	Ground-Water EEC(ppb)	Short-Term DWLOC (ppb)
U.S. Population	31,000	100	3.3	0.042	35,000
Children(1-2 years old)	4,500	100	3.3	0.042	9,800

4. *Intermediate-term risk.* Intermediate-term aggregate exposure takes into account residential exposure plus chronic exposure to food and water (considered to be a background exposure level).

Fluroxypyr is currently registered for use(s) that could result in intermediate-term residential exposure and the Agency has determined that it is appropriate to aggregate chronic food and water and intermediate-term exposures for fluroxypyr.

Using the exposure assumptions described in this unit for intermediate-term exposures, EPA has concluded that food and residential exposures aggregated result in aggregate MOEs of 31,000 for the U.S. population and 4,500 for children (1-2 years old). These aggregate MOEs do not exceed the Agency's level of concern for aggregate exposure to food and residential uses. In addition, intermediate-term DWLOCs were calculated and compared to the EECs for chronic exposure of fluroxypyr in ground and surface water. After calculating DWLOCs and comparing them to the EECs for surface and ground water, EPA does not expect intermediate-term aggregate exposure to exceed the Agency's level of concern, as shown in Table 5 of this unit:

TABLE 5.—AGGREGATE RISK ASSESSMENT FOR INTERMEDIATE-TERM EXPOSURE TO FLUROXYPYR

PopulationSubgroup	AggregateMOE(Food + Residential)	Aggregate Level of Con-cern(LOC)	Surface Water EEC(ppb)	Ground-Water EEC(ppb)	Inter-mediate-Term DWLOC (ppb)
U.S. Population	31,000	100	3.3	0.042	35,000
Children(1-2 years old)	4,500	100	3.3	0.042	9,800

5. *Aggregate cancer risk for U.S. population.* Fluroxypyr is classified as a not likely human carcinogen and is not expected to pose a cancer risk.

6. *Determination of safety.* Based on these risk assessments, EPA concludes that there is a reasonable certainty that no harm will result to the general population, and to infants and children from aggregate exposure to fluroxypyr residues.

IV. Other Considerations

A. Analytical Enforcement Methodology

The gas chromatography/mass selective detector (GC/MSD) enforcement method, submitted by Dow AgroSciences LLC, has been validated for the determination of residues of fluroxypyr and fluroxypyr 1-MHE as the acid equivalent in plant commodities. The method for livestock commodities has been validated for the determination of residues of fluroxypyr and fluroxypyr 1-MHE in cow milk and liver. The proposed plant and animal method is adequate for enforcement of tolerances in/on field corn, sweet corn, sorghum, range and pasture grass, and animal commodities as a result of this use.

Fluroxypyr has been tested through the FDAs Multiresidue Methodology, Protocols C, D, and E. The results have been published in the FDA Pesticide Analytical Manual, Volume I.

B. International Residue Limits

There is neither a Codex proposal, nor Canadian or Mexican limits, for residues of fluroxypyr in/on field corn, sweet corn, sorghum, range and pasture grass. Harmonization is not an issue for this petition.

C. Conditions

The following data are being required to confirm the results of the studies already reviewed by the Agency and/or to complete the database requirements prior to approval of an unconditional sweet corn registration:

i. Additional field trials - conduct and submit four (4) additional field trials in Regions III (1 trial), V(1 trial), XI(1 trial), and XII(1 trial). Residue analysis of sweet corn field trial samples should avoid using the DowElanco Method ACR 90.8, due to matrix interference cited in PP#2G04066.

ii. Storage stability data - submit to support the sweet corn field trial data.

iii. 28-Day Inhalation Toxicity Study

V. Conclusion

Therefore, the tolerances are established for combined residues of fluroxypyr 1-methylheptyl ester [((4-amino-3,5-dichloro-6-fluoro-2-pyridinyl)oxy) acetic acid, 1-methylheptyl] and its metabolite fluroxypyr [((4-amino-3,5-dichloro-6-fluoro-2-pyridinyl)oxy) acetic acid], free and conjugated, all expressed as fluroxypyr, in or on field corn, grain at 0.02 ppm; field corn, forage at 1.0 ppm; field corn, stover at 0.5 ppm; on or in sweet corn, kernels plus cob with husks removed at 0.02 ppm; sweet corn, forage at 1.0 ppm; sweet corn, stover at 2.0 ppm; on or in sorghum, grain at 0.02 ppm; sorghum, forage at 2.0 ppm; sorghum, stover (fodder) at 4.0 ppm; and on or in grass, forage at 120 ppm; grass, hay at 160 ppm. Tolerances are revised for combined residues of fluroxypyr on cattle, milk; goat, milk;

hog, milk; horse, milk; and sheep, milk at 0.3 ppm; and on cattle, kidney; goat, kidney; hog, kidney; horse, kidney; and sheep, kidney at 1.5 ppm.

VI. Objections and Hearing Requests

Under section 408(g) of FFDCA, as amended by FQPA, any person may file an objection to any aspect of this regulation and may also request a hearing on those objections. The EPA procedural regulations which govern the submission of objections and requests for hearings appear in 40 CFR part 178. Although the procedures in those regulations require some modification to reflect the amendments made to FFDCA by FQPA, EPA will continue to use those procedures, with appropriate adjustments, until the necessary modifications can be made. The new section 408(g) of FFDCA provides essentially the same process for persons to ''object'' to a regulation for an exemption from the requirement of a tolerance issued by EPA under new section 408(d) of FFDCA, as was provided in the old sections 408 and 409 of FFDCA. However, the period for filing objections is now 60 days, rather than 30 days.

A. What Do I Need to Do to File an Objection or Request a Hearing?

You must file your objection or request a hearing on this regulation in accordance with the instructions provided in this unit and in 40 CFR part 178. To ensure proper receipt by EPA, you must identify docket ID number OPP–2003–0377 in the subject line on the first page of your submission. All requests must be in writing, and must be mailed or delivered to the Hearing Clerk on or before March 1, 2004.

1. *Filing the request*. Your objection must specify the specific provisions in the regulation that you object to, and the grounds for the objections (40 CFR 178.25). If a hearing is requested, the objections must include a statement of the factual issues(s) on which a hearing is requested, the requestor's contentions on such issues, and a summary of any evidence relied upon by the objector (40 CFR 178.27). Information submitted in connection with an objection or hearing request may be claimed confidential by marking any part or all of that information as CBI. Information so marked will not be disclosed except in accordance with procedures set forth in 40 CFR part 2. A copy of the information that does not contain CBI must be submitted for inclusion in the public record. Information not marked confidential may be disclosed publicly by EPA without prior notice.

Mail your written request to: Office of the Hearing Clerk (1900C), Environmental Protection Agency, 1200 Pennsylvania Ave., NW., Washington, DC 20460–0001. You may also deliver your request to the Office of the Hearing Clerk in Rm.104, Crystal Mall #2, 1921 Jefferson Davis Hwy., Arlington, VA. The Office of the Hearing Clerk is open from 8 a.m. to 4 p.m., Monday through Friday, excluding legal holidays. The telephone number for the Office of the Hearing Clerk is (703) 603–0061.

2. *Tolerance fee payment*. If you file an objection or request a hearing, you must also pay the fee prescribed by 40 CFR 180.33(i) or request a waiver of that fee pursuant to 40 CFR 180.33(m). You must mail the fee to: EPA Headquarters Accounting Operations Branch, Office of Pesticide Programs, P.O. Box 360277M, Pittsburgh, PA 15251. Please identify the fee submission by labeling it ''Tolerance Petition Fees.''

EPA is authorized to waive any fee requirement ''when in the judgement of the Administrator such a waiver or refund is equitable and not contrary to the purpose of this subsection.'' For additional information regarding the waiver of these fees, you may contact James Tompkins by phone at (703) 305–5697, by e-mail at *tompkins.jim@epa.gov*, or by mailing a request for information to Mr. Tompkins at Registration Division (7505C), Office of Pesticide Programs, Environmental Protection Agency, 1200 Pennsylvania Ave., NW., Washington, DC 20460–0001.

If you would like to request a waiver of the tolerance objection fees, you must mail your request for such a waiver to: James Hollins, Information Resources and Services Division (7502C), Office of Pesticide Programs, Environmental Protection Agency, 1200 Pennsylvania Ave., NW., Washington, DC 20460–0001.

3. *Copies for the Docket*. In addition to filing an objection or hearing request with the Hearing Clerk as described in Unit VI.A., you should also send a copy of your request to the PIRIB for its inclusion in the official record that is described in Unit I.B.1. Mail your copies, identified by docket ID number OPP–2003–0377, to: Public Information and Records Integrity Branch, Information Resources and Services Division (7502C), Office of Pesticide Programs, Environmental Protection Agency, 1200 Pennsylvania Ave., NW., Washington, DC 20460–0001. In person or by courier, bring a copy to the location of the PIRIB described in Unit I.B.1. You may also send an electronic copy of your request via e-mail to: *opp-docket@epa.gov*. Please use an ASCII file format and avoid the use of special characters and any form of encryption. Copies of electronic objections and hearing requests will also be accepted on disks in WordPerfect 6.1/8.0 or ASCII file format. Do not include any CBI in your electronic copy. You may also submit an electronic copy of your request at many Federal Depository Libraries.

B. When Will the Agency Grant a Request for a Hearing?

A request for a hearing will be granted if the Administrator determines that the material submitted shows the following: There is a genuine and substantial issue of fact; there is a reasonable possibility that available evidence identified by the requestor would, if established resolve one or more of such issues in favor of the requestor, taking into account uncontested claims or facts to the contrary; and resolution of the factual issues(s) in the manner sought by the requestor would be adequate to justify the action requested (40 CFR 178.32).

VII. Statutory and Executive Order Reviews

This final rule establishes a tolerance under section 408(d) of FFDCA in response to a petition submitted to the Agency. The Office of Management and Budget (OMB) has exempted these types of actions from review under Executive Order 12866, entitled *Regulatory Planning and Review* (58 FR 51735, October 4, 1993). Because this rule has been exempted from review under Executive Order 12866 due to its lack of significance, this rule is not subject to Executive Order 13211, *Actions Concerning Regulations That Significantly Affect Energy Supply, Distribution, or Use* (66 FR 28355, May 22, 2001). This final rule does not contain any information collections subject to OMB approval under the Paperwork Reduction Act (PRA), 44 U.S.C. 3501 *et seq.*, or impose any enforceable duty or contain any unfunded mandate as described under Title II of the Unfunded Mandates Reform Act of 1995 (UMRA) (Public Law 104–4). Nor does it require any special considerations under Executive Order 12898, entitled *Federal Actions to Address Environmental Justice in Minority Populations and Low-Income Populations* (59 FR 7629, February 16, 1994); or OMB review or any Agency action under Executive Order 13045, entitled *Protection of Children from Environmental Health Risks and Safety Risks* (62 FR 19885, April 23, 1997). This action does not involve any technical standards that would require Agency consideration of voluntary

consensus standards pursuant to section 12(d) of the National Technology Transfer and Advancement Act of 1995 (NTTAA), Public Law 104–113, section 12(d) (15 U.S.C. 272 note). Since tolerances and exemptions that are established on the basis of a petition under section 408(d) of FFDCA, such as the tolerance in this final rule, do not require the issuance of a proposed rule, the requirements of the Regulatory Flexibility Act (RFA) (5 U.S.C. 601 *et seq.*) do not apply. In addition, the Agency has determined that this action will not have a substantial direct effect on States, on the relationship between the national government and the States, or on the distribution of power and responsibilities among the various levels of government, as specified in Executive Order 13132, entitled *Federalism*(64 FR 43255, August 10, 1999). Executive Order 13132 requires EPA to develop an accountable process to ensure ''meaningful and timely input by State and local officials in the development of regulatory policies that have federalism implications.'' ''Policies that have federalism implications'' is defined in the Executive order to include regulations that have ''substantial direct effects on the States, on the relationship between the national government and the States, or on the distribution of power and responsibilities among the various levels of government.'' This final rule directly regulates growers, food processors, food handlers and food retailers, not States. This action does not alter the relationships or distribution of power and responsibilities established by Congress in the preemption provisions of section 408(n)(4) of FFDCA. For these same reasons, the Agency has determined that this rule does not have any ''tribal implications'' as described in Executive Order 13175, entitled *Consultation and Coordination with Indian Tribal Governments* (65 FR 67249, November 6, 2000). Executive Order 13175, requires EPA to develop an accountable process to ensure ''meaningful and timely input by tribal officials in the development of regulatory policies that have tribal implications.'' ''Policies that have tribal implications'' is defined in the Executive order to include regulations that have ''substantial direct effects on one or more Indian tribes, on the relationship between the Federal Government and the Indian tribes, or on the distribution of power and responsibilities between the Federal Government and Indian tribes.'' This rule will not have substantial direct effects on tribal governments, on the relationship between the Federal Government and Indian tribes, or on the distribution of power and responsibilities between the Federal Government and Indian tribes, as specified in Executive Order 13175. Thus, Executive Order 13175 does not apply to this rule.

VIII. Congressional Review Act

The Congressional Review Act, 5 U.S.C. 801 *et seq.*, as added by the Small Business Regulatory Enforcement Fairness Act of 1996, generally provides that before a rule may take effect, the agency promulgating the rule must submit a rule report, which includes a copy of the rule, to each House of the Congress and to the Comptroller General of the United States. EPA will submit a report containing this rule and other required information to the U.S. Senate, the U.S. House of Representatives, and the Comptroller General of the United States prior to publication of this final rule in the **Federal Register**. This final rule is not a ''major rule'' as defined by 5 U.S.C. 804(2).

List of Subjects in 40 CFR Part 180

Environmental protection, Administrative practice and procedure, Agricultural commodities, Pesticides and pests, Reporting and recordkeeping requirements.

Dated: December 22, 2003.

Lois Rossi,

Director, Registration Division, Office of Pesticide Programs.

■ Therefore, 40 CFR chapter I is amended as follows:

PART 180—[AMENDED]

■ 1. The authority citation for part 180 continues to read as follows:

Authority: 21 U.S.C. 321(q), 346(a) and 371.

■ 2. Section 180.535 is amended by alphabetically adding new commodities and revising the commodities ''cattle, kidney,'' ''goat, kidney,'' ''hog, kidney,'' ''horse, kidney,'' ''milk,'' and ''sheep, kidney'' in the table in paragraph (a) to read as follows:

§ 180.535 Fluroxypyr; tolerances for residues.

(a) * * *

Commodity	Parts per million
* * *	* *
Cattle, kidney	1.5
* * *	* *
Corn, field, forage	1.0
Corn, field, grain	0.02
Corn, field, stover	0.5
Corn, sweet, forage	1.0
Corn, sweet, kernel plus cob with husks removed	0.02
Corn, sweet, stover	2.0
* * *	* *
Goat, kidney	1.5
* * *	* *
Grass, forage	120
Grass, hay	160
* * *	* *
Hog, kidney	1.5
* * *	* *
Horse, kidney	1.5
* * *	* *
Milk	0.3
* * *	* *
Sheep, kidney	1.5
* * *	* *
Sorghum, grain, forage	2.0
Sorghum, grain, grain	0.02
Sorghum, grain, stover	4.0
* * *	* *

* * * * *

[FR Doc. 03–32007 Filed 12–30–03; 8:45 am]

BILLING CODE 6560–50–S

ENVIRONMENTAL PROTECTION AGENCY

40 CFR Part 180

[OPP–2003–0394; FRL–7337–5]

Cyprodinil; Time-Limited Pesticide Tolerance

AGENCY: Environmental Protection Agency (EPA).

ACTION: Final rule.

SUMMARY: This regulation extends the time-limited tolerances for residues of cyprodinil, 4-cyclopropyl-6-methyl-*N*-phenyl-2-pyrimidinamine in or on onion, dry bulb; onion, green; and strawberry. Interregional Research Project Number 4 (IR-4) requested these tolerances under the Federal Food, Drug, and Cosmetic Act (FFDCA), as amended by the Food Quality Protection Act of 1996 (FQPA). The tolerance will expire on December 31, 2004.

DATES: This regulation is effective December 31, 2003. Objections and requests for hearings, identified by docket ID number OPP–2003–0394, must be received on or before March 1, 2004.

ADDRESSES: Written objections and hearing requests may be submitted electronically, by mail, or through hand delivery/courier. Follow the detailedinstructions as provided in Unit VI. of the **SUPPLEMENTARY INFORMATION**.

FOR FURTHER INFORMATION CONTACT: Shaja R. Brothers, Registration Division (7505C), Office of Pesticide Programs, Environmental Protection Agency, 1200 Pennsylvania Ave., NW., Washington, DC 20460–0001; telephone number: (703) 308–3194; e-mail address:*brothers.shaja@epa.gov*.

SUPPLEMENTARY INFORMATION:

I. General Information

A. Does this Action Apply to Me?

You may be potentially affected by this action if you are an agricultural producer, food manufacturer, or pesticide manufacturer. Potentially affected entities may include, but are not limited to:

- Crop production (NAICS 111)
- Animal production (NAICS 112)
- Food manufacturing (NAICS 311)
- Pesticide manufacturing (NAICS 32532)

This listing is not intended to be exhaustive, but rather provides a guide for readers regarding entities likely to be affected by this action. Other types of entities not listed in this unit could also be affected. The North American Industrial Classification System (NAICS) codes have been provided to assist you and others in determining whether this action might apply to certain entities. If you have any questions regarding the applicability of this action to a particular entity, consult the person listed under **FOR FURTHER INFORMATION CONTACT**.

B. How Can I Get Copies of this Document and Other Related Information?

1. *Docket*. EPA has established an official public docket for this action under docket identification (ID) number OPP–2003–0394. The official public docket consists of the documents specifically referenced in this action, any public comments received, and other information related to this action. Although a part of the official docket, the public docket does not include Confidential Business Information (CBI) or other information whose disclosure is restricted by statute. The official public docket is the collection of materials that is available for public viewing at the Public Information and Records Integrity Branch (PIRIB), Rm. 119, Crystal Mall #2, 1921 Jefferson Davis Hwy., Arlington, VA. This docket facility is open from 8:30 a.m. to 4 p.m., Monday through Friday, excluding legal holidays. The docket telephone number is (703) 305–5805.

2. *Electronic access*. You may access this **Federal Register** document electronically through the EPA Internet under the ''**Federal Register**'' listings at *http://www.epa.gov/fedrgstr/*.A frequently updated electronic version of 40 CFR part 180 is available at *http://www.access.gpo.gov/nara/cfr/cfrhtml_00/Title_40/40cfr180_00.html*, a beta site currently under development. To access the OPPTS Harmonized Guidelines referenced in this document, go directly to the guidelines at *http://www.epa.gov/opptsfrs/home/guidelin.htm*.

An electronic version of the public docket is available through EPA's electronic public docket and comment system, EPA Dockets. You may use EPA Dockets at *http://www.epa.gov/edocket/* to submit or view public comments, access the index listing of the contents of the official public docket, and to access those documents in the public docket that are available electronically. Although not all docket materials may be available electronically, you may still access any of the publicly available docket materials through the docket facility identified in Unit I.B.1. Once in the system, select ''search,'' then key in the appropriate docket ID number.

II. Background and Statutory Findings

In the **Federal Register** of November 12, 2003 (68 FR 64102) (FRL–7333–4), EPA issued a notice pursuant to section 408 of the FFDCA, 21 U.S.C. 346a, as amended by the FQPA (Public Law 104–170), announcing the filing of a pesticide petition (PP 8E5012) by Interregional Research Project Number 4, 681 U.S. Highway 1 South, North Brunswick, NJ 08902. This notice included a summary of the petition prepared by Syngenta Crop Protection, Inc., the registrant. There were no comments received in response to the notice of filing.

The petition requested that 40 CFR 180.532 be amended by extending tolerances for residues of the fungicide cyprodinil, 4-cyclopropyl-6-methyl-*N*-phenyl-2-pyrimidinamine, in or on onion, dry bulb at 0.60 parts per million (ppm), onion, green at 4.0 ppm, and strawberry at 5.0 ppm. The tolerance will expire on December 31, 2004.

Section 408(b)(2)(A)(i) of the FFDCA allows EPA to establish a tolerance (the legal limit for a pesticide chemical residue in or on a food) only if EPA determines that the tolerance is ''safe.'' Section 408(b)(2)(A)(ii) of the FFDCA defines ''safe'' to mean that ''there is a reasonable certainty that no harm will result from aggregate exposure to the pesticide chemical residue, including all anticipated dietary exposures and all other exposures for which there is reliable information.'' This includes exposure through drinking water and in residential settings, but does not include occupational exposure. Section 408(b)(2)(C) of the FFDCA requires EPA to give special consideration to exposure of infants and children to the pesticide chemical residue in establishing a tolerance and to ''ensure that there is a reasonable certainty that no harm will result to infants and children from aggregate exposure to the pesticide chemical residue....''

EPA performs a number of analyses to determine the risks from aggregate exposure to pesticide residues. For further discussion of the regulatory requirements of section 408 of the FFDCA and a complete description of the risk assessment process, see the final rule on Bifenthrin Pesticide Tolerances (62 FR 62961, November 26, 1997) (FRL–5754–7).

III. Aggregate Risk Assessment and Determination of Safety

Consistent with section 408(b)(2)(D) of the FFDCA, EPA has reviewed the available scientific data and other relevant information in support of this action. EPA has sufficient data to assess the hazards of and to make a determination on aggregate exposure, consistent with section 408(b)(2) of the FFDCA , for tolerances for residues of cyprodinil, 4-cyclopropyl-6-methyl-*N*-phenyl-2-pyrimidinamine on onion, dry bulb at 0.60 ppm, onion, green at 4.0 ppm, and strawberry at 5.0 ppm ppm. EPA's assessment of exposures and risks associated with establishing the tolerances follow.

A. Toxicological Profile

EPA has evaluated the available toxicity data and considered its validity, completeness, and reliability as well as the relationship of the results of the studies to human risk. EPA has also considered available information concerning the variability of the sensitivities of major identifiable subgroups of consumers, including infants and children. The nature of the toxic effects caused by cyprodinil are discussed in Unit III.A. of the final rule on Cyprodinil Time-Limited Pesticide Tolerance published in the **Federal Register** of June 22, 2001 (66 FR 33478) (FRL–6778–7).

B. Toxicological Endpoints

A summary of the toxicological endpoints for cyprodinil used for human risk assessment is discussed in

Unit III.B. of the final rule on Cyprodinil Time-Limited Pesticide Tolerance published in the **Federal Register** of June 22, 2001 (66 FR 33478) (FRL–6778–7).

C. Exposure Assessment

1. *Dietary exposure from food and feed uses.* Tolerances have been established (40 CFR 180.532) for the residues of cyprodinil, in or on a variety of raw agricultural commodities. Acute, and chronic exposure assessments conducted by EPA to assess dietary exposures from cyprodinil are discussed in Unit III.C.1 of the final rule on Cyprodinil Time-Limited Pesticide Tolerance published in the **Federal Register** of June 22, 2001 (66 FR 33478) (FRL–6778–7).

2. *Dietary exposure from drinking water.* PRZM/EXAMS and SCI-GROW model estimated environmental concentrations (EECs) for cyprodinil for acute and chronic exposures are discussed in Unit III.C.2 of the final rule on Cyprodinil Time-Limited Pesticide Tolerance published in the **Federal Register** of June 22, 2001 (66 FR 33478) (FRL–6778–7).

3. *From non-dietary exposure.* Cyprodinil is not registered for use on any sites that would result in residential exposure.

4. *Cumulative exposure to substances with a common mechanism of toxicity.* Section 408(b)(2)(D)(v) of the FFDCA requires that, when considering whether to establish, modify, or revoke a tolerance, the Agency consider ''available information'' concerning the cumulative effects of a particular pesticide's residues and ''other substances that have a common mechanism of toxicity.''

EPA does not have, at this time, available data to determine whether cyprodinil has a common mechanism of toxicity with other substances or how to include this pesticide in a cumulative risk assessment. Unlike other pesticides for which EPA has followed a cumulative risk approach based on a common mechanism of toxicity, cyprodinil does not appear to produce a toxic metabolite produced by other substances. For the purposes of this tolerance action, therefore, EPA has not assumed that cyprodinil has a common mechanism of toxicity with other substances. For information regarding EPA's efforts to determine which chemicals have a common mechanism of toxicity and to evaluate the cumulative effects of such chemicals, see the final rule for Bifenthrin Pesticide Tolerances (62 FR 62961, November 26, 1997) (FRL–5754–7).

D. Safety Factor for Infants and Children

1.*In general.* Section 408 of the FFDCA provides that EPA shall apply an additional tenfold margin of safety for infants and children in the case of threshold effects to account for prenatal and postnatal toxicity and the completeness of the data base on toxicity and exposure unless EPA determines that a different margin of safety will be safe for infants and children. Margins of safety are incorporated into EPA risk assessments either directly through use of a MOE analysis or through using uncertainty (safety) factors in calculating a dose level that poses no appreciable risk to humans.

2. *Prenatal and postnatal sensitivity.* Prenatal and postnatal sensitivity are discussed in Unit III.D.1.(ii) of the final rule on Cyprodinil Time-Limited Pesticide Tolerance published in the **Federal Register** of June 22, 2001 (66 FR 33478) (FRL–6778–7).

3. *Conclusion.* There is a complete toxicity data base for cyprodinil and exposure data are complete or are estimated based on data that reasonably accounts for potential exposures. EPA determined that the 10X safety factor to protect infants and children should be reduced to 1X. For further discussion, see Unit III.D.1.(iii) of the final rule on Cyprodinil Time-Limited Pesticide Tolerance published in the **Federal Register** of June 22, 2001 (66 FR 33478) (FRL–6778–7).

E. Aggregate Risks and Determination of Safety

To estimate total aggregate exposure to a pesticide from food, drinking water, and residential uses, the Agency calculates DWLOCs which are used as a point of comparison against the model estimates of a pesticide's concentration in water (EECs). DWLOC values are not regulatory standards for drinking water. DWLOCs are theoretical upper limits on a pesticide's concentration in drinking water in light of total aggregate exposure to a pesticide in food and residential uses. In calculating a DWLOC, the Agency determines how much of the acceptable exposure (i.e., the PAD) is available for exposure through drinking water e.g., allowable chronic water exposure (mg/kg/day) = cPAD - (average food + residential exposure). This allowable exposure through drinking water is used to calculate a DWLOC.

A DWLOC will vary depending on the toxic endpoint, drinking water consumption, and body weights. Default body weights and consumption values as used by the USEPA Office of Water are used to calculate DWLOCs: 2 liter (L)/70 kg (adult male), 2L/60 kg (adult female), and 1L/10 kg (child). Default body weights and drinking water consumption values vary on an individual basis. This variation will be taken into account in more refined screening-level and quantitative drinking water exposure assessments. Different populations will have different DWLOCs. Generally, a DWLOC is calculated for each type of risk assessment used: acute, short-term, intermediate-term, chronic, and cancer.

When EECs for surface water and groundwater are less than the calculated DWLOCs, OPP concludes with reasonable certainty that exposures to the pesticide in drinking water (when considered along with other sources of exposure for which OPP has reliable data) would not result in unacceptable levels of aggregate human health risk at this time. Because OPP considers the aggregate risk resulting from multiple exposure pathways associated with a pesticide's uses, levels of comparison in drinking water may vary as those uses change. If new uses are added in the future, OPP will reassess the potential impacts of residues of the pesticide in drinking water as a part of the aggregate risk assessment process.

1. *Acute risk.* The acute risk assessment for cyprodinil is discussed in Unit III.E.1 of the final rule on Cyprodinil Time-Limited Pesticide Tolerance published in the **Federal Register** of June 22, 2001 (66 FR 33478) (FRL–6778–7).

2. *Chronic risk.* The chronic risk assessment for cyprodinil is discussed in Unit III.E.2 of the final rule on Cyprodinil Time-Limited Pesticide Tolerance published in the **Federal Register** of June 22, 2001 (66 FR 33478) (FRL–6778–7).

3. *Aggregate cancer risk for U.S. population.* Based on the lack of evidence of carcinogenicity in mice and rats at doses that were judged to be adequate to assess the carcinogenic potential, cyprodinil was classified as not likely to be carcinogenic to humans. Therefore, cyprodinil is not expected to pose a cancer risk to humans.

4. *Determination of safety.* Based on these risk assessments, EPA concludes that there is a reasonable certainty that no harm will result to the general population, and to infants and children from aggregate exposure to cyprodinil residues.

IV. Other Considerations

A. Analytical Enforcement Methodology

The results of Multiresidue Method testing of cyprodinil and its metabolite

CGA –232449 have been forwarded to the Food and Drug Administration (FDA). Cyprodinil was tested according to the FDA Multiresidue protocols (Protocols C, D, and E), and acceptable recoveries were obtained for cyprodinil fortified in apples at 0.50 ppm using Protocol D. The petitioner is proposing the Method AG-631A as a tolerance enforcement method for residues of cyprodinil in/on the subject crops. The method includes confirmatory procedures using gas chromatography/nitrogen/phosphorus detector (GC/NPD). The method has successfully undergone radiovalidation using 14C-labeled tomato samples and independent laboratory validation. In addition, the method has been the subject of acceptable Agency petition method validations on stone fruits and almond nutmeat and hulls.

The method may be requested from: Chief, Analytical Chemistry Branch, Environmental Science Center, 701 Mapes Rd., Ft. Meade, MD 20755–5350; telephone number: (410) 305–2905; e-mail address: residuemethods@epa.gov.

B. International Residue Limits

Canada, Codex, and Mexico do not have maximum residue limits (MRLs) for residues of cyprodinil in/on the proposed crops. Therefore, harmonization is not an issue.

V. Conclusion

Therefore, the tolerance is established for residues of cyprodinil, 4-cyclopropyl-6-methyl-*N*-phenyl-2-pyrimidinamine, in or on onion, dry bulb at 0.60 ppm, onion, green at 4.0 ppm, and strawberry at 5.0 ppm.

VI. Objections and Hearing Requests

Under section 408(g) of the FFDCA, as amended by the FQPA, any person may file an objection to any aspect of this regulation and may also request a hearing on those objections. The EPA procedural regulations which govern the submission of objections and requests for hearings appear in 40 CFR part 178. Although the procedures in those regulations require some modification to reflect the amendments made to the FFDCA by the FQPA, EPA will continue to use those procedures, with appropriate adjustments, until the necessary modifications can be made. The new section 408(g) of the FFDCA provides essentially the same process for persons to ''object'' to a regulation for an exemption from the requirement of a tolerance issued by EPA under new section 408(d), as was provided in the old sections 408 and 409 of the FFDCA. However, the period for filing objections is now 60 days, rather than 30 days.

A. What Do I Need to Do to File an Objection or Request a Hearing?

You must file your objection or request a hearing on this regulation in accordance with the instructions provided in this unit and in 40 CFR part 178. To ensure proper receipt by EPA, you must identify docket ID number OPP–2003–0394 in the subject line on the first page of your submission. All requests must be in writing, and must be mailed or delivered to the Hearing Clerk on or before March 1, 2004.

1. *Filing the request*. Your objection must specify the specific provisions in the regulation that you object to, and the grounds for the objections (40 CFR 178.25). If a hearing is requested, the objections must include a statement of the factual issues(s) on which a hearing is requested, the requestor's contentions on such issues, and a summary of any evidence relied upon by the objector (40 CFR 178.27). Information submitted in connection with an objection or hearing request may be claimed confidential by marking any part or all of that information as CBI. Information so marked will not be disclosed except in accordance with procedures set forth in 40 CFR part 2. A copy of the information that does not contain CBI must be submitted for inclusion in the public record. Information not marked confidential may be disclosed publicly by EPA without prior notice.

Mail your written request to: Office of the Hearing Clerk (1900C), Environmental Protection Agency, 1200 Pennsylvania Ave., NW., Washington, DC 20460–0001. You may also deliver your request to the Office of the Hearing Clerk in Rm.104, Crystal Mall # 2, 1921 Jefferson Davis Hwy., Arlington, VA. The Office of the Hearing Clerk is open from 8 a.m. to 4 p.m., Monday through Friday, excluding legal holidays. The telephone number for the Office of the Hearing Clerk is (703) 603–0061.

2. *Tolerance fee payment*. If you file an objection or request a hearing, you must also pay the fee prescribed by 40 CFR 180.33(i) or request a waiver of that fee pursuant to 40 CFR 180.33(m). You must mail the fee to: EPA Headquarters Accounting Operations Branch, Office of Pesticide Programs, P.O. Box 360277M, Pittsburgh, PA 15251. Please identify the fee submission by labeling it ''Tolerance Petition Fees.''

EPA is authorized to waive any fee requirement ''when in the judgement of the Administrator such a waiver or refund is equitable and not contrary to the purpose of this subsection.'' For additional information regarding the waiver of these fees, you may contact James Tompkins by phone at (703) 305–5697, by e-mail at *tompkins.jim@epa.gov*, or by mailing a request for information to Mr. Tompkins at Registration Division (7505C), Office of Pesticide Programs, Environmental Protection Agency, 1200 Pennsylvania Ave., NW., Washington, DC 20460–0001.

If you would like to request a waiver of the tolerance objection fees, you must mail your request for such a waiver to: James Hollins, Information Resources and Services Division (7502C), Office of Pesticide Programs, Environmental Protection Agency, 1200 Pennsylvania Ave., NW., Washington, DC 20460–0001.

3. *Copies for the Docket*. In addition to filing an objection or hearing request with the Hearing Clerk as described in Unit VI.A., you should also send a copy of your request to the PIRIB for its inclusion in the official record that is described in Unit I.B.1. Mail your copies, identified by docket ID number OPP–2003–0394, to: Public Information and Records Integrity Branch, Information Resources and Services Division (7502C), Office of Pesticide Programs, Environmental Protection Agency, 1200 Pennsylvania Ave., NW., Washington, DC 20460–0001. In person or by courier, bring a copy to the location of the PIRIB described in Unit I.B.1. You may also send an electronic copy of your request via e-mail to: *opp-docket@epa.gov*. Please use an ASCII file format and avoid the use of special characters and any form of encryption. Copies of electronic objections and hearing requests will also be accepted on disks in WordPerfect 6.1/8.0 or ASCII file format. Do not include any CBI in your electronic copy. You may also submit an electronic copy of your request at many Federal Depository Libraries.

B. When Will the Agency Grant a Request for a Hearing?

A request for a hearing will be granted if the Administrator determines that the material submitted shows the following: There is a genuine and substantial issue of fact; there is a reasonable possibility that available evidence identified by the requestor would, if established resolve one or more of such issues in favor of the requestor, taking into account uncontested claims or facts to the contrary; and resolution of the factual issues(s) in the manner sought by the requestor would be adequate to justify the action requested (40 CFR 178.32).

VII. Statutory and Executive Order Reviews

This final rule establishes a tolerance under section 408(d) of the FFDCA in

response to a petition submitted to the Agency. The Office of Management and Budget (OMB) has exempted these types of actions from review under Executive Order 12866, entitled *Regulatory Planning and Review* (58 FR 51735, October 4, 1993). Because this rule has been exempted from review under Executive Order 12866 due to its lack of significance, this rule is not subject to Executive Order 13211, *Actions Concerning Regulations That Significantly Affect Energy Supply, Distribution, or Use* (66 FR 28355, May 22, 2001). This final rule does not contain any information collections subject to OMB approval under the Paperwork Reduction Act (PRA), 44 U.S.C. 3501 *et seq.*, or impose any enforceable duty or contain any unfunded mandate as described under Title II of the Unfunded Mandates Reform Act of 1995 (UMRA) (Public Law 104–4). Nor does it require any special considerations under Executive Order 12898, entitled *Federal Actions to Address Environmental Justice in Minority Populations and Low-Income Populations* (59 FR 7629, February 16, 1994); or OMB review or any Agency action under Executive Order 13045, entitled *Protection of Children from Environmental Health Risks and Safety Risks* (62 FR 19885, April 23, 1997). This action does not involve any technical standards that would require Agency consideration of voluntary consensus standards pursuant to section 12(d) of the National Technology Transfer and Advancement Act of 1995 (NTTAA), Public Law 104–113, section 12(d) (15 U.S.C. 272 note). Since tolerances and exemptions that are established on the basis of a petition under section 408(d) of the FFDCA, such as the tolerance in this final rule, do not require the issuance of a proposed rule, the requirements of the Regulatory Flexibility Act (RFA) (5 U.S.C. 601 *et seq.*) do not apply. In addition, the Agency has determined that this action will not have a substantial direct effect on States, on the relationship between the national government and the States, or on the distribution of power and responsibilities among the various levels of government, as specified in Executive Order 13132, entitled *Federalism*(64 FR 43255, August 10, 1999). Executive Order 13132 requires EPA to develop an accountable process to ensure ''meaningful and timely input by State and local officials in the development of regulatory policies that have federalism implications.'' ''Policies that have federalism implications'' is defined in the Executive order to include regulations that have'' substantial direct effects on the States, on the relationship between the national government and the States, or on the distribution of power and responsibilities among the various levels of government.'' This final rule directly regulates growers, food processors, food handlers and food retailers, not States. This action does not alter the relationships or distribution of power and responsibilities established by Congress in the preemption provisions of section 408(n)(4) of the FFDCA. For these same reasons, the Agency has determined that this rule does not have any ''tribal implications'' as described in Executive Order 13175, entitled *Consultation and Coordination with Indian Tribal Governments* (65 FR 67249, November 6, 2000). Executive Order 13175, requires EPA to develop an accountable process to ensure ''meaningful and timely input by tribal officials in the development of regulatory policies that have tribal implications.'' ''Policies that have tribal implications'' is defined in the Executive order to include regulations that have ''substantial direct effects on one or more Indian tribes, on the relationship between the Federal Government and the Indian tribes, or on the distribution of power and responsibilities between the Federal Government and Indian tribes.'' This rule will not have substantial direct effects on tribal governments, on the relationship between the Federal Government and Indian tribes, or on the distribution of power and responsibilities between the Federal Government and Indian tribes, as specified in Executive Order 13175. Thus, Executive Order 13175 does not apply to this rule.

VIII. Congressional Review Act

The Congressional Review Act, 5 U.S.C. 801*et seq.*, as added by the Small Business Regulatory Enforcement Fairness Act of 1996, generally provides that before a rule may take effect, the agency promulgating the rule must submit a rule report, which includes a copy of the rule, to each House of the Congress and to the Comptroller General of the United States. EPA will submit a report containing this rule and other required information to the U.S. Senate, the U.S. House of Representatives, and the Comptroller General of the United States prior to publication of this final rule in the **Federal Register**. This final rule is not a ''major rule'' as defined by 5 U.S.C. 804(2).

List of Subjects in 40 CFR Part 180

Environmental protection, Administrative practice and procedure, Agricultural commodities, Pesticides and pests, Reporting and recordkeeping requirements.

Dated: December 12, 2003.

Lois Rossi,

Director, Registration Division, Office of Pesticide Programs.

■ Therefore, 40 CFR chapter I is amended as follows:

PART 180—[AMENDED]

■ 1. The authority citation for part 180 continues to read as follows:

Authority: 21 U.S.C. 321(q), 346(a) and 371.

■ 2. Section 180.532 is amended by revising the commodities in the table in paragraph (a)(2) to read as follows:

§ 180.532 Cyprodinil; tolerances for residues.

(a) * * *

(2) * * *

Commodity	Parts per million	Expiration/ revocation date
Onion, dry bulb	0.60	12/31/04
Onion, green	4.0	12/31/04
Strawberry	5.0	12/31/04

* * * * *

[FR Doc. 03–32061 Filed 12–30–03; 8:45 am]

BILLING CODE 6560–50–S

DEPARTMENT OF HEALTH AND HUMAN SERVICES

Centers for Medicare & Medicaid Services

42 CFR Parts 410 and 419

[CMS–1471–CN]

RIN 0938–AL19

Medicare Program; Medicare Program; Changes to the Hospital Outpatient Prospective Payment System and Calendar Year 2004 Payment Rates; Final Rule; Correction

AGENCY: Centers for Medicare & Medicaid Services (CMS), HHS.

ACTION: Correction of final rule with comment period.

SUMMARY: This document corrects errors in the final rule with comment period that appeared in the **Federal Register** on November 7, 2003, entitled ''Medicare Program; Changes to the Hospital Outpatient Prospective Payment System

and Calendar Year 2004 Payment Rates; Final Rule.'' This notice is a supplement to the November 7, 2003 final rule and is completely separate from any notice that promulgates new policy that results from enactment of the Medicare Prescription Drug, Improvement, and Modernization Act of 2003.

EFFECTIVE DATE: January 1, 2004.

FOR FURTHER INFORMATION CONTACT: Dana Burley, (410) 786–0378.

SUPPLEMENTARY INFORMATION:

I. Background

In FR Doc. 03–27791 of November 7, 2003 (68 FR 63398), there were several technical errors as well as a number of public comments that were received timely, but that we inadvertently failed to address. The errors include incorrect or potentially misleading responses, and in Addenda A and B, omissions and typographical errors. In addition, we are adding information to the addenda that was not available when we published the final rule. This additional information does not affect payment under the hospital outpatient prospective payment system (OPPS). We ordinarily provide a 30-day delay in the effective date of the provisions of a notice. Section 553(d) of the Administrative Procedure Act (5 U.S.C. 553(d)) ordinarily requires a 30-day delay in the effective date of final rules after the date of their publication in the **Federal Register**. This 30-day delay in effective date can be waived, however, if an agency finds good cause that the delay is impracticable, unnecessary, or contrary to the public interest, and the agency incorporates a statement of the finding and its reasons in the notice issued. In addition, section 1871(e)(1) of the Social Security Act, as amended by section 903(b)(1) of the Medicare Prescription Drug, Improvement, and Modernization Act of 2003 (DIMA), also requires that a substantive change in a regulation shall not become effective before the end of the 30-day period that begins on the date that the Secretary has issued or published the substantive change. Section 1871(e)(1) of the Social Security Act, as amended by section 903(b)(1) of DIMA, provides an exception to that requirement if the Secretary finds that the waiver of such 30-day period is necessary to comply with statutory requirements or that the application of such 30-day period is contrary to the public interest. We find good cause to waive the 30-day delay in effective date for this correction notice as set forth in section III, ''Waiver of 30-Day Delay in Effective Date,'' below.

II. Correction of Errors

A. Correction of Inaccurate Information

On page 63423, first column, fifth sentence, we stated: ''The case of APC 0108, we used the external device cost data that was used to set the median for the 2003 OPPS because we received no outside data for the 2004 OPPS for this APC and because the proposed median of $28,685.30 set forth in the proposed rule was considerably higher than the final rule data median of $23,944.80, which resulted when additional claims were used to calculate the median cost.''

We subsequently determined that external data that met our preferred criteria for use in setting payment rates had been furnished as part of a timely, properly submitted comment for APC 0108. Therefore, we have revised the median cost and payment rate ($23,641.27) that was in the final rule for this APC using the data submitted in the comment. The new payment rate is $24,699.74. See Table 1 below for the complete revised values information.

To correct this error, we remove the fifth sentence in column 1 on page 63423 and replace it with the following: ''In the case of APC 0108, we used external device cost data submitted in a comment on the proposed rule to set the median for the 2004 OPPS. The proposed median of $28,685.30 set forth in the proposed rule was considerably higher than the median calculated for the final rule, $23,944.80, which resulted when additional claims were used to calculate the median cost. The use of this external data raised the payment rate to a level we believe is more appropriate.''

B. Responses to Comments Not Included in the Final Rule

Bone Marrow Harvesting

Comment: A commenter asserted that the claims data for Physicians' Current Procedural Terminology (CPT) codes 38230 (bone marrow harvesting), 38240 (bone marrow/stem cell transplantation, allogenic), and 38241 (bone marrow/stem cell transplantation, autologous) are seriously flawed. For instance, the median cost for CPT code 38230 (using data for 35 claims) was $74.81. The commenter stated that CPT code 38230 involves a 60–90 minute operating room procedure performed under general anesthesia, with costs more closely approaching the payment rate for APC 0111 (paying $718.67) than APC 0123 (paying $288.53), its current APC placement. The commenter expressed similar concern over the claims data for CPT codes 38240 and 38241, asserting that their placement in APC 0123 results in inadequate payment to cover the costs of bone marrow and stem cell transplantation.

The commenter urged us to move CPT codes 38230, 38240, and 38241 from APC 0123 (bone marrow harvesting/stem cell transplant, paying $288.53) to APC 0111 (blood product exchange, paying $718.67).

Response: We agree with the commenter that the claims data for CPT code 38230 appear to be based on flawed claims. We believe that the costs involved in performing CPT code 38230 (bone marrow harvesting) are more similar to the costs involved in performing CPT codes 38205 and 38206 (stem cell harvesting, placed in APC 0111); therefore, we will move CPT code 38230 from APC 0123 to APC 0111. We will maintain the payment rate for APC 0111 at $718.67 as stated in the November 7, 2003 final rule, since we believe the claims for CPT code 38230 represent aberrant data and should not be used to recalculate the payment rate for APC 0111.

In contrast, we do not believe that the claims data for CPT codes 38240 and 38241 are flawed. The resource utilization of performing bone marrow and stem cell transplantations is similar to the resource utilization of performing infusion therapy services (which are paid $210 in APC 0110), since bone marrow and stem cell transplantations involve no incision and no unusual instruments or equipment. Therefore, we believe that the APC placement of CPT codes 38240 and 38241 in APC 0123 sufficiently captures the costs involved in performing these services. Although these codes will remain in APC 0123, their payment rate in APC 0123 will increase by $47.01 (from $288.53 to $335.54) above the rate stated in the November 7, 2003 final rule, as a result of moving CPT code 38230 out of APC 0123 and recalculating the median for APC 0123 based on CPT codes 38240 and 38241 that remain in APC 0123.

Cobalt 60-Based Stereotactic Radiosurgery

Comment: A commenter requested that we combine CPT codes G0242 (Cobalt 60-based stereotactic radiosurgery plan) and G0243 (Cobalt 60-based stereotactic radiosurgery delivery). The commenter explained that, before 2000, we allowed Cobalt 60-based stereotactic radiosurgery to be appropriately billed using CPT code 61793 (stereotactic radiosurgery—particle beam, gamma ray or linear accelerator—one or more sessions), the same code that non-Medicare payers continue to use for this procedure.

However, our current guidelines for coding this procedure necessitate the billing of two codes (planning and delivery), and therefore, correct billing of this treatment using the current codes results in a multiple procedure claim. The commenter asserted that because we calculate medians using only single claims, the APC placement of Healthcare Common Procedure Coding System (HCPCS) codes G0242 and G0243 was based on aberrant single claims.

The commenter requested that these codes (G0242 and G0243) be combined into a single procedure code (that is, CPT code 61793) in order for us to accurately capture the costs of this treatment in a single claim because both parts of this treatment (planning and delivery) are always delivered on the same day in one surgical procedure. Based on resource consumption and clinical homogeneity, the commenter suggested that we place this single procedure code in one of the following APCs: 0222 (paying $12,670), 0226 (paying $7,437), or 0227 (paying $8,775).

Response: In addition to the above comment, we received several other comments stating that HCPCS code G0242 (Cobalt 60-based stereotactic radiosurgery plan) was being used inappropriately for linear accelerator-based stereotactic radiosurgery (SRS) planning in addition to Cobalt 60-based SRS planning, due to the nonexistence of a code to bill for linear accelerator-based SRS planning. Considering the current misuse of HCPCS code G0242 and the potential for causing greater confusion by combining CPT codes G0242 and G0243, we created a planning code for linear accelerator-based SRS (G0338) to distinguish this procedure from Cobalt 60-based SRS planning. Since the claims data for G0242 represent costs for linear accelerator-based SRS planning (due to misuse of the code) in addition to Cobalt 60-based SRS planning, we are uncertain of how to combine these data with G0243 (Cobalt 60-based SRS delivery) to determine an accurate payment rate for a combined code for planning and delivery of Cobalt 60-based SRS. Therefore, we will solicit input from the APC Panel at its next meeting in early 2004.

In the meantime, we will maintain two separate HCPCS codes (G0242 and G0243) for the planning and delivery of Cobalt 60-based SRS treatment, consistent with the use of two G codes for the planning (G0338) and delivery (G0173, G0251, G0339, G0340, as applicable) of each type of linear accelerator-based SRS treatment, as described below.

Correct Coding for Various Types of Stereotactic Radiosurgery (SRS):

- Cobalt 60-based, multi-source SRS—
  Planning—G0242 (APC 1516 paying $1,450)
  Delivery—G0243 (APC 1528 paying $5,250)
- Linear accelerator-based SRS—
  Non-robotic linear accelerator-based SRS (complete session)
  —Planning—G0338 (APC 1516 paying $1,450)
  —Delivery—G0173 (APC 1528 paying $5,250)
  Non-robotic linear accelerator-based SRS (fractionated sessions)
  —Planning—G0338 (APC 1516 paying $1,450)
  —Delivery—G0251 (APC 1513 paying $1,150, per session)
  Image-guided robotic linear accelerator-based SRS (complete session or first session of fractionated treatment)—
  —Planning—G0338 (APC 1516 paying $1,450)
  —Delivery—G0339 (APC 1528 paying $5,250)
  Image-guided robotic linear accelerator-based SRS (fractionated treatment, 2nd—5th sessions)—
  —Planning—G0338 (APC 1516 paying $1,450)
  —Delivery—G0340 (APC 1525 paying $3,750, per session)

Comment: A commenter urged us to recognize the cost and clinical differences between HCPCS codes G0243 and G0173 by placing them in separate APCs.

Response: We believe that the low volume of single claims for HCPCS code G0243 (172 single claims out of 1,033 total claims = 17 percent of total claims) does not substantiate movement of this code into a procedural APC at this time, and there is no clinical reason for a reassignment. Therefore, we will keep HCPCS code G0243 in new technology APC 1528 with a payment of $5,250 for CY 2004.

ProstacScint

Comment: The manufacturer of ProstaScint (indium capromab pendetide), a diagnostic agent used for the imaging of prostate cancer, indicated that this product's proposed payment rate is significantly below the cost that hospitals incur in acquiring ProstaScint. The manufacturer stated that reduced payment would restrict hospitals from providing ProstaScint studies to Medicare beneficiaries and have a significant negative effect on the treatment and outcomes of patients at risk for prostate cancer. The commenter submitted a survey of hospitals demonstrating their costs of purchasing ProstaScint.

Response: We agree with the commenter that the use of only hospital claims data to set the payment rate for ProstaScint may adversely impact beneficiary access. We believe that the external data submitted by the manufacturer meets our preferred criteria; therefore, we will use the external data to establish an adjusted median cost for this product by blending the median cost derived from our dampening methodology with the external cost data on a one-to-one ratio.

APC	HCPCS	Short descriptor	2004 adjusted median cost	External acquisition cost	2004 1:1 Blended median cost
1604	A9507	Indium/111 capromab pendetide	$726.50	$1,610.75	$1,168.63

Arthroscopy

Comment: One commenter requested that we assign CPT code 29827 to APC 0042 (Level II Arthroscopy). The code was new for 2003 and was assigned to APC 0041 (Level I Arthroscopy). The commenter provided information to support the assertion that the procedure described by CPT code 29827 is very similar to that described by CPT code 29826 with regard to operating room time required, equipment requirements, and complexity. However, procedures coded as CPT code 29826 are assigned to APC 0042.

Response: Our medical staff evaluated this request and decided that they would like the advice of the APC Panel before making a determination. In their analysis of the assignments for CPT codes 29826 and 29827, they determined that it would be appropriate to solicit input from the APC Panel regarding the clinical coherence of both APCs 0041 and 0042. The APC Panel will meet in early 2004, and we plan to include these APCs on the agenda for its

consideration. The date for the APC Panel meeting and registration information will be published in the **Federal Register** and on the CMS OPPS Web site at least 60 days before the meeting date.

Photoselective Vaporization of the Prostate

Comment: Several commenters urged us to increase payment for CPT codes 52647 and 52648 (photoselective vaporization of the prostate (PVP)). They expressed concern that other less effective procedures requiring less skill have a significantly higher proposed payment rate. Commenters stated that the proposed payment rate for PVP under APC 0163 does not cover the costs of providing access to this new technology.

Response: Based on our claims data, we believe that CPT codes 52647 and 52648 are appropriately placed in APC 0163 for CY 2004, but the commenters may want to consider applying for a new CPT/HCPCS code for this procedure so that it is identifiable separately from other procedures. Alternatively, PVP may be a candidate for consideration under the OPPS new technology process. We refer interested parties to our Web site *www.cms.hhs.gov/providers/hopps/* for further information on the new technology application and evaluation process.

Inpatient-Only List

Comment: We received a comment requesting that we remove several codes from the inpatient-only list. The codes are: 44901 (Incision and drainage of appendiceal abscess; percutaneous); 49021 (Drainage of peritoneal abscess or localized peritonitis, exclusive of appendiceal abscess; percutaneous); 49041 (Drainage of subdiaphragmatic or subphrenic abscess; percutaneous); and 49061 (Drainage of retroperitoneal abscess; percutaneous). The commenters based their request on the fact that codes they believe are similar to 44901, 49021, 49041, and 49061 are not on the inpatient-only list. Codes that they used as examples included 32201 (Pneumonostomy; with percutaneous drainage of abscess or cyst); and 50021 (Drainage of perirenal or renal abscess; percutaneous).

Response: The information provided by the commenter did not provide an adequate basis for our medical staff to make a decision. Instead, our physicians will solicit input from additional specialty groups that provide care to the patients undergoing these procedures. We will also present this issue to the APC Panel for consideration at its next meeting in early 2004.

Neutron Radiotherapy

Comment: We received a comment requesting that we create a new ''G'' code for neutron radiotherapy so that these procedures can be assigned to a new APC. At this time, the procedures are coded using a CPT code that includes other procedures that the commenter does not believe are related to neutron radiotherapy. The commenter believes the combination of procedures in the CPT code is inappropriate.

Response: We evaluated this request and continue to believe that the current coding is appropriate. We do not believe that creation of a new ''G'' code is warranted in this case because there is a CPT code that specifically describes this procedure.

Magnetic Resonance Imaging and Magnetic Resonance Angiography

Comment: We received a comment requesting that we assign magnetic resonance imaging and magnetic resonance angiography to separate APCs. These procedures are currently assigned to APCs 0336 and 0337.

Response: We evaluated this request and continue to believe that the current assignments are appropriate and result in accurate payment for the procedures.

Fetal Echocardiogram

Comment: We received one comment requesting that we reassign codes for fetal echocardiograms (CPT 76825 through 76827) to APC 0269. The codes are currently assigned to APCs 0671 and 0697.

Response: We believe that the APC assignments for these CPT codes continue to be appropriate. We used most of the submitted claims for calculating medians for these codes. We believe the resource use and clinical coherence in the current APCs are appropriate.

New Orphan Drug

Comment: We received a comment requesting that arsenic trioxide (Trisenox) be considered as a single-indication orphan drug for Medicare OPPS. The drug has orphan status from the FDA for treatment of multiple myeloma, myelodysplastic syndrome, chronic myeloid leukemia, and chronic lymphocystic anemia.

Response: After careful evaluation, we agree that arsenic trioxide does meet our criteria for special payment as a single indication orphan drug. As we stated in our final rule (68 FR 63453), we are setting payment under the 2004 OPPS for single indication orphan drugs at 88 percent of the average wholesale price listed for these drugs in the April 1, 2003 single drug pricer unless we are presented with verifiable information that shows that our payment rate does not reflect the price that is widely available to the hospital market. For 2004, the payment rate for Trisenox will be $34.32 per unit.

C. Revisions and Corrections to Addenda A and B

As a result of a HCPCS coding change, the relative weight, payment rate, and minimum unadjusted copayment for APC 0012 as published on page 63478, are incorrect. Code 11057 moved from APC 0012 to APC 0013, and we failed to update the APCs in time for the final rule. The correct values for APC 0012 are: relative weight, 0.7612; payment rate, $41.53; and minimum unadjusted copayment amount, $8.31. The correct values for APC 0013 are relative weight, 1.1302; payment rate, $61.66; and the minimum unadjusted copayment is unchanged. These values are listed in bold type in Table 1 below.

As a result of our use of external data, APC 0108 has new values in Addendum A on page 63479. The correct relative weight is 452.6995, the payment rate increases to $24,669.74, and the minimum unadjusted copayment becomes $4,939.95. These values are listed in bold type in Table 1 below.

In response to a comment, we moved HCPCS code 43752 from APC 0272 to APC 0121. This move resulted in new Addendum A values for both of these APCs. The incorrect values on page 63479 for APC 0121 are corrected as follows: relative weight, 2.1114; payment rate, $115.2; and minimum unadjusted copayment amount, $23.04.

On page 63481, the incorrect values for APC 0272 are corrected as follows: relative weight, 1.4184; payment rate, $77.39; and minimum unadjusted copayment, $15.48.

In response to a comment that we overlooked, we moved CPT code 38230 from APC 0123 to APC 0111. This resulted in new values for APC 0123 in Addendum A. The values on page 63479 are corrected as follows: relative weight, 6.1499; payment rate, $335.54; and minimum unadjusted copayment amount, $67.11. There are no changes to the values for APC 0111. These values are listed in bold type in Table 1 below.

On page 63482, the values for APC 0321 are incorrect due to a change in the status indicator for HCPCS code 90901. The status indicator was changed to ''A'' and, therefore, does not contribute to the calculation of the APC median. We correct the values for APC 0321 by

replacing the values on page 63482 with the following: relative weight, 1.4817; payment rate, $80.84; and minimum unadjusted copayment amount, $16.17. These values are listed in bold type in Table 1 below.

The status indicator for HCPCS code 96105 was changed to ''A'' and, therefore, should not contribute to the calculation of the APC median. The values for APC 0373 on page 63482 are incorrect because the code (96105) was used under its previous status indicator ''X'' and was therefore included in the media calculation. We replace the values in Addendum A on page 63482 with the following correct values: relative weight, 2.3288; payment rate, $127.06; and minimum unadjusted copayment amount, $25.41. These values are listed in bold type in Table 1 below.

The relative weight, copayment and payment rates are incorrect for APC 0384 as published on page 63482. Two HCPCS codes (43268 and 43269) were moved from APC 0151 into APC 0384, and those changes were not reflected in the published Addendum A. We replace the values for APC 0384 with the following: relative weight, 36.54; payment rate, $1,993.66; national unadjusted copayment, $433.01; and minimum unadjusted copayment, $398.73. The values for APC 0151 do not change. These values are listed in bold type in Table 1 below.

APC 0413 was listed in Addendum A on page 63483 in error. No codes are assigned to this APC, so it no longer exists. We remove APC 0413.

We correct Addenda A and B by adding the relative weight for APC 0734 on page 63484 in Addendum A and for CPT/HCPCS codes C1774 and Q0137 on pages 63610 and 36350, respectively, in Addendum B. The relative weight is 0.0594 for both of these codes.

The values for APC 1604 are incorrect as published on page 63486. Additional data were available but inadvertently were not used in the median calculation for this APC. The new values reflect use of the additional data. We correct the values for APC 1604 as follows: relative weight, 20.2752; payment rate, $1,106.24; and minimum unadjusted copayment, $221.25. These values are listed in bold type in Table 1 below.

On page 63487, the payment rate for APC 9012 is corrected to reflect its new status as a single-indication orphan drug. We correct the payment rate to $34.32 and the minimum unadjusted copayment to $6.86.

On page 63488, the descriptor for APC 9116 is incorrect. We correct it to read ''Inj. Ertapenem sodium, per 500 mg.''

For the following CPT/HCPCS codes on the pages identified, beginning on page 63488 and concluding on page 63644, we listed outdated descriptors. We correct the descriptor on page 63488 for code 0002T; page 63496 for code 15852; page 63548 for code 55870; page 63619 for code E0141; page 63622 for codes E0973 and E0974; page 63623 for code E0978; page 63624 for code E1226; page 63627 for codes G0210, G0213, G0214, G0215, G0230, G0246, G0247, G0248; page 63630 for code J1563; page 63631 for codes J2260 and J2324; page 63633 for code J8700; page 63636 for code K0560; page 63637 for codes K0600, K0607, K0614, K0615, K0616, and K0617; page 63643 for codes L4350, L4360, and L4386; and on page 63644 for codes L5646 and L5648. See Table 2—Corrections to Addendum B of the November 7, 2003, Final Rule for corrections to Addendum B for the codes identified above.

On page 63627, CPT/HCPCS G0244 is listed with an incorrect relative weight, payment rate, and copayment amount. We correct the current relative weight, payment rate, and copayment, by inserting 6.6961, $365.35, and $73.07, respectively. See Table 2 below for the corrected values.

On page 63634, CPT/HCPCS J9017 is listed with an incorrect relative weight, payment rate, and copayment. J9017 is an orphan drug and is reimbursed at 88 percent of AWP. We correct the addendum by replacing current values with a payment rate of $34.32 and minimum unadjusted copayment of $6.86.

On page 63590, we incorrectly assigned status indicator A to CPT/HCPCS 90918 through 90925. These codes are replaced by G0320 through G0327. Therefore, codes 90918 through 90925 are assigned status indicator E. On page 63590, for CPT/HCPCS 90918, 90919, 90920, 90921, 90922, 90924, and 90925, we remove the status indicator A and insert status indicator E. See Table 2—Corrections to Addendum B of the November 7, 2003, Final Rule for corrections to Addendum B for the codes identified above.

The following CPT/HCPCS codes were omitted from Addendum B of the November 7, 2003, final rule: 99375, status indicator E, home health care supervision, effective 1/1/03; 99378, status indicator E, hospice care supervision, effective 1/1/03; G0308, status indicator A, condition NI, ESRD related svc 4+mo<2yrs; G0309, status indicator A, condition NI, ESRD related svc 2–3mo<2rs; G0310, status indicator A, condition NI, ESRD related svc 1vst<2yr; G0311, status indicator A, condition NI, ESRD related svs 4+mo 2–11 yr; G0312, status indicator A, condition NI, ESRD related svs 2–3 mo 2–11 yr; G0313, status indicator A, condition NI, ESRD related svs 1 mon 2–11 yr; G0314, status indicator A, condition NI, ESRD related svs 4+mo 12–19; G0315, status indicator A, condition NI, ESRD related svs 2–3 mo 12–19; G0316, status indicator A, condition NI, ESRD related svs 1 vst 12–19y; G0317, status indicator A, condition NI, ESRD related svs 4+mo 20+yrs; G0318, status indicator A, condition NI, ESRD related svs 2–3 mo 20+y; G0319, status indicator A, condition NI, ESRD related svs 1 visit 20+y; G0320, status indicator A, condition NI, ESRD related svs home under 2; G0321, status indicator A, condition NI, ESRD related svs home mo<2ys; G0322, status indicator A, condition NI, ESRD related svs home mo12–19; G0328, status indicator A, condition NI, fecal blood scrn immunoassay; all effective 1/1/04; and P9603, status indicator A, One-way allow prorated miles, effective 1/1/92. See Table 2—Corrections to Addendum B of the November 7, 2003, Final Rule for corrections to Addendum B for the codes identified above.

On page 63608, we incorrectly assigned status indicator B and condition NI to CPT/HCPCS A9527, I–131 tositumomab therapeutic. New code A9534, with the same descriptor, replaces A9527, effective 1/1/04. A9527 is removed effective 1/1/04, with no grace period. On page 63608, for CPT/HCPCS A9527, we remove the status indicator of B and insert a status indicator of D. We remove the condition NI and insert a condition of DNG. See Table 2—Corrections to Addendum B of the November 7, 2003, Final Rule for corrections to Addendum B for the code identified above.

For the CPT/HCPCS codes on the pages identified, beginning on page 63490 and concluding on page 63653, we incorrectly listed status indicator E instead of status indicator B. We correct the status indicator on page 63490 for codes 0054T, 0055T, 0056T, 0057T, 0060T, and 0061T; page 63598 for codes 99002 and 99140; page 63604 for codes A4671, A4672, and A4673; page 63605 for codes A4674 and A4728; page 63624 for code E1634; page 63633 for J7330; page 63641 for L3350; and page 63653 for code V2761. See Table 2—Corrections to Addendum B of the November 7, 2003, Final Rule for corrections to Addendum B for the codes identified above.

For the following CPT/HCPCS codes on the pages identified, beginning on page 63490 and concluding on page 63619, we incorrectly listed condition

DG (deleted with grace). These codes are not deleted for 2004, and the condition should be blank. We correct the condition on page 63490 for codes 00546, 00548, 00550, 00560, 00562, 00563, and 00566; and page 63539 for codes 47135, 47136, 47300, and 47350; and page 63619 for E0165. See Table 2—Corrections to Addendum B of the November 7, 2003, Final Rule for corrections to Addendum B for the codes identified above.

On page 63569, CPT/HCPCS 76977 was inadvertently assigned an incorrect status indicator. We remove status indicator S and insert status indicator X. The payment rates are correct as is. See Table 2—Corrections to Addendum B of the November 7, 2003, Final Rule for corrections to Addendum B for the code identified above.

On page 63590, CPT/HCPCS 92019 was assigned an incorrect status indicator. We remove status indicator S and insert status indicator T. The payment rates are correct as is. See Table 2—Corrections to Addendum B of the November 7, 2003, Final Rule for corrections to Addendum B for the code identified above.

On page 63608, CPT/HCPCS A9700 was incorrectly assigned an APC, relative weight, payment rate, and copayment. A9700 is not payable under OPPS, and no payment should be made for this service. We remove the APC, relative weight, payment rate, and minimum unadjusted copayment. See Table 2—Corrections to Addendum B of the November 7, 2003, Final Rule for corrections to Addendum B for the code identified above.

On page 63588, CPT/HCPCS codes 90296 and 90581 are incorrectly assigned a status indicator, APC, relative weight, payment rate, and copayment. Effective 1/1/04, codes 90296 and 90581 are packaged services and therefore are assigned status indicator N. For codes 90296 and 90581, we remove status indicator K, APC, payment rate, and minimum unadjusted copayment, and insert status indicator N. See Table 2—Corrections to Addendum B of the November 7, 2003, Final Rule for corrections to Addendum B for the codes identified above.

On page 63623, CPT/HCPCS code E1065 omits condition DG. This code is deleted with grace period effective January 1, 2004. We correct this by inserting DG in the condition column.

Many codes were incorrectly listed with status indicator A that should be listed with the new status indicator Y, indicating that the code is not paid under OPPS, but should be billed to the Durable Medical Equipment Regional Carrier (DMERC). They are listed in Tables 3–5. In addition, codes A4232, A4632, E0188, E0189, E0218, E0602, E0740, E0760, E0765, K0610, K0611, K0612, and K0613 were incorrectly listed with status indicator E, but should be listed with status indicator Y. Codes E0967, E0969, E0977, E0980, E0994, E0997, E0998, E0999, E1001, E1035, E1065, and E1227 were incorrectly listed with status indicator B, but should be listed with status indicator Y. For all these codes, we remove the current status indicator and insert status indicator Y. See Tables 3–5 for a list of codes for which the status indicator has changed from A, E, or B to Y.

On page 63471 of the November 7, 2002 Final Rule, we specify that HCPCS codes for drugs, biologicals, and radiopharmaceuticals that are new for 2004 yet have no predecessor will be assigned packaged status for 2004.

On pages 63608 and 63652, HCPCS codes A9526 and Q4078, respectively, were incorrectly assigned a status indicator, APC, relative weight, payment rate, and copayment. Effective 1/1/04, codes A9526 and Q4078 are packaged services and therefore are assigned status indicator N. For these codes, we remove status indicator K, APC, payment rate, and minimum unadjusted copayment, and insert status indicator N.

On page 63415 of the November 7, 2003 Final Rule, we state that we plan to delete HCPCS C1088 effective 1/1/04. Addendum B does not list this code as deleted. For HCPCS C1088, we remove status indicator T, APC, payment rate, and minimum unadjusted copayment, and insert status indicator D and condition DNG (deleted with no grace period).

III. Waiver of 30-Day Delay in Effective Date

We ordinarily provide a 30-day delay in the effective date of the provisions of a notice. Section 553(d) of the Administrative Procedure Act (5 U.S.C. 553(d)) ordinarily requires a 30-day delay in the effective date of final rules after the date of their publication in the **Federal Register**. This 30-day delay in effective date can be waived, however, if an agency finds good cause that the delay is impracticable, unnecessary, or contrary to the public interest. In addition, section 1871(e)(1) of the Social Security Act, as amended by section 903(b)(1) of the Medicare Prescription Drug, Improvement, and Modernization Act of 2003 (DIMA), also requires that a substantive change in a regulation shall not become effective before the end of the 30-day period that begins on the date that the Secretary has issued or published the substantive change. Section 1871(e)(1) of the Social Security Act, as amended by section 903(b)(1) of DIMA, provides an exception to that requirement if the Secretary finds that the waiver of such 30-day period is necessary to comply with statutory requirements or that the application of such 30-day period is contrary to the public interest. The agency must incorporate a statement of the good cause finding and rationale in the published rule.

In this case, we believe that it is in the public interest to make the corrections identified above effective January 1, 2004 without the 30-day delay in effective date. In most cases, these errors were the result of our inadvertent failure to address a number of public comments that were received timely, incorrect or potentially misleading responses, and omissions and typographical errors in Addenda A and B. In addition, we have added information to the addenda that was not available when we published the November 7, 2003 final rule. This information does not affect payment under the OPPS. A delay in the effective date of this notice would result, in most cases, in underpayment of hospitals beginning January 1, 2004. If we did not make these changes, hospitals would be paid improperly, and beneficiaries' access to care may be impeded. Therefore, we find good cause to waive the 30-day delay in effective date.

TABLE 1.—ADDENDUM A CORRECTIONS AS CORRECTED BY THIS FEDERAL REGISTER DOCUMENT

APC	Group title	Status indicator	Relative weight	Payment rate	National unadjusted copayment	Minimum unadjusted copayment
0012	Level I Debridement & Destruction	T	0.7612	41.53	11.18	8.31
0013	Level II Debridement & Destruction	T	1.1302	61.66	14.20	12.33

TABLE 1.—ADDENDUM A CORRECTIONS AS CORRECTED BY THIS FEDERAL REGISTER DOCUMENT—Continued

APC	Group title	Status indicator	Relative weight	Payment rate	National unadjusted co-payment	Minimum unadjusted co-payment
0108	Insertion/Replacement/Repair of Cardioverter-Defibrillator Leads.	T	452.6995	24699.74		4939.95
0121	Level I Tube changes and Repositioning.	T	2.1114	115.20	43.80	23.04
0123	Bone Marrow Harvesting and Bone Marrow/Stem Cell Transplant.	S	6.1499	335.54		67.11
0272	Level I Fluoroscopy	X	1.4184	77.39	38.36	15.48
0321	Biofeedback and Other Training	S	1.4817	80.84	21.78	16.17
0339	Observation	S	6.6961	365.35		73.07
0373	Neuropsychological Testing	X	2.3288	127.06		25.41
0384	GI Procedures with Stents	T	36.5400	1993.66	433.01	398.73
APC 0413 is deleted						
0734	Injection, darbepoetin alfa (for non-ESRD, per 1 mcg.	K	0.0594	3.24		0.65
9012	Arsenic Trioxide	K		34.32		.6.86
1604	IN 111 capromab pendetide, per dose.	K	20.2752	1106.24		221.25

TABLE 2.—ADDENDUM B CORRECTIONS AS CORRECTED BY THIS FEDERAL REGISTER DOCUMENT

CPT/ HCPCS	Status indicator	Condition	Description	APC	Relative weight	Payment rate	National unadjusted copayment	Minimum unadjusted copayment
0002T	C	DG	endo repair abd aa aorto uni					
00546	C		Anesth, lung, chest wall surg					
00548	N		Anesth, trachea, bronchi surg					
0054T	B	NI	Bone surgery using computer					
00550	N		Anesth, sternal debridement					
0055T	B	NI	Bone surgery using computer					
00560	C		Anesth, open heart surgery					
00562	C		Anesth, open heart surgery					
00563	N		Anesth, heart proc w/pump					
00566	N		Anesth, cabg w/o pump					
0056T	B	NI	Bone surgery using computer					
0057T	B	NI	Uppr gi scope w/ thrml txmnt					
0060T	B	NI	Electrical impedance scan					
0061T	B	NI	Destruction of tumor, breast					
11001	T		Debride infected skin add-on	0012	0.7612	41.53	11.18	8.31
11055	T		Trim skin lesion	0012	0.7612	41.53	11.18	8.31
11056	T		Trim skin lesions, 2 to 4	0012	0.7612	41.53	11.18	8.31
11057	T		Trim skin lesions, over 4	0013	1.1302	61.66	14.20	12.33
11200	T		Removal of skin tags	0013	1.1302	61.66	14.20	12.33
11300	T		Shave skin lesion	0012	0.7612	41.53	11.18	8.31
11301	T		Shave skin lesion	0012	0.7612	41.53	11.18	8.31
11302	T		Shave skin lesion	0012	0.7612	41.53	11.18	8.31
11305	T		Shave skin lesion	0013	1.1302	61.66	14.20	12.33
11306	T		Shave skin lesion	0013	1.1302	61.66	14.20	12.33
11307	T		Shave skin lesion	0013	1.1302	61.66	14.20	12.33
11308	T		Shave skin lesion	0013	1.1302	61.66	14.20	12.33
11310	T		Shave skin lesion	0013	1.1302	61.66	14.20	12.33
11311	T		Shave skin lesion	0013	1.1302	61.66	14.20	12.33
11312	T		Shave skin lesion	0013	1.1302	61.66	14.20	12.33
11730	T		Removal of nail plate	0013	1.1302	61.66	14.20	12.33
11732	T		Remove nail plate, add-on	0012	0.7612	41.53	11.18	8.31
11900	T		Injection into skin lesions	0012	0.7612	41.53	11.18	8.31
11901	T		Added skin lesions injection	0012	0.7612	41.53	11.18	8.31
15786	T		Abrasion, lesion, single	0012	0.7612	41.53	11.18	8.31
15787	T		Abrasion, lesions, add-on	0013	1.1302	61.66	14.20	12.33
15788	T		Chemical peel, face, epiderm	0012	0.7612	41.53	11.18	8.31
15792	T		Chemical peel, nonfacial	0012	0.7612	41.53	11.18	8.31
15793	T		Chemical peel, nonfacial	0012	0.7612	41.53	11.18	8.31
15852	X		Dressing change not for burn	0340	0.6314	34.45		6.89
16000	T		Initial treatment of burn(s)	0012	0.7612	41.53	11.18	8.31
16020	T		Treatment of burn(s)	0013	1.1302	61.66	14.20	12.33
16025	T		Treatment of burn(s)	0012	0.7612	41.53	11.18	8.31
17250	T		Chemical cautery, tissue	0013	1.1302	61.66	14.20	12.33
17271	T		Destruction of skin lesions	0013	1.1302	61.66	14.20	12.33
17340	T		Cryotherapy of skin	0012	0.7612	41.53	11.18	8.31
17360	T		Skin peel therapy	0012	0.7612	41.53	11.18	8.31

TABLE 2.—ADDENDUM B CORRECTIONS AS CORRECTED BY THIS FEDERAL REGISTER DOCUMENT—Continued

CPT/ HCPCS	Status indicator	Condition	Description	APC	Relative weight	Payment rate	National unadjusted copayment	Minimum unadjusted copayment
17380	T		Hair removal by electrolysis	0012	0.7612	41.53	11.18	8.31
31502	T		Change of windpipe airway	0121	2.1114	115.20	43.80	23.04
38230	S		Bone marrow collection	0111	13.1719	718.67	200.18	143.73
38240	S		Bone marrow/stem transplant	0123	6.1499	335.54		67.11
38241	S		Bone marrow/stem transplant	0123	6.1499	335.54		67.11
43219	T		Esophagus endoscopy	0384	36.5400	1993.66	433.01	398.73
43256	T		Uppr gi endoscopy w stent	0384	36.5400	1993.66	433.01	398.73
43268	T		Endo cholangiopancreatograph	0384	36.5400	1993.66	433.01	398.73
43269	T		Endo cholangiopancreatograph	0384	36.5400	1993.66	433.01	398.73
43752	T		Nasal/orogastric w/stent	0121	2.1114	115.20	43.80	23.04
43760	T		Change gastrostomy tube	0121	2.1114	115.20	43.80	23.04
43761	T		Reposition gastrostomy tube	0121	2.1114	115.20	43.80	23.04
44370	T		Small bowel endoscopy/stent	0384	36.5400	1993.66	433.01	398.73
44379	T		S bowel endoscope w/stent	0384	36.5400	1993.66	433.01	398.73
44383	T		Ileoscopy w/stent	0384	36.5400	1993.66	433.01	398.73
44397	T		Colonoscopy w/stent	0384	36.5400	1993.66	433.01	398.73
44500	T		Intro, gastrointestinal tube	0121	2.1114	115.20	43.80	23.04
45327	T		Proctosigmoidoscopy w/stent	0384	36.5400	1993.66	433.01	398.73
45345	T		Sigmoidoscopy w/stent	0384	36.5400	1993.66	433.01	398.73
45387	T		Colonoscopy w/stent	0384	36.5400	1993.66	433.01	398.73
46916	T		Cryosurgery, anal lesion(s)	0013	1.1302	61.66	14.20	12.33
47135	C		Transplantation of liver					
47136	C		Transplantation of liver					
47300	C		Surgery for liver lesion					
47350	C		Repair liver wound					
51705	T		Change of bladder tube	0121	2.1114	115.20	43.80	23.04
54050	T		Destruction, penis lesion(s)	0013	1.1302	61.66	14.20	12.33
54056	T		Cryosurgery, penis lesion(s)	0012	0.7612	41.53	11.18	8.31
55870	T		Electroejaculation	0197	4.8280	263.42		52.68
62194	T		Replace/irrigate catheter	0121	2.1114	115.20	43.80	23.04
69220	T		Clean out mastoid cavity	0012	0.7612	41.53	11.18	8.31
70370	X		Throat x-ray & fluoroscopy	0272	1.4184	77.39	38.36	15.48
70371	X		Speech evaluation, complex	0272	1.4184	77.39	38.36	15.48
71023	X		Chest x-ray and fluoroscopy	0272	1.4184	77.39	38.36	15.48
71034	X		Chest x-ray and fluoroscopy	0272	1.4184	77.39	38.36	15.48
71090	X		X-ray & pacemaker insertion	0272	1.4184	77.39	38.36	15.48
74340	X		X-ray guide for GI tube	0272	1.4184	77.39	38.36	15.48
76000	X		Fluoroscope examination	0272	1.4184	77.39	38.36	15.48
76120	X		Cine/video x-rays	0272	1.4184	77.39	38.36	15.48
76496	X		Fluoroscopic procedure	0272	1.4184	77.39	38.36	15.48
76977	X		Us bone density measure	0340	0.6314	34.45		6.89
90296	N		Diphtheria antitoxin					
90581	N		Anthrax vaccine, sc					
90911	S		Biofeedback peri/uro/rectal	0321	1.4817	80.84	21.78	16.17
90918	E		ESRD related services, month					
90919	E		ESRD related services, month					
90920	E		ESRD related services, month					
90921	E		ESRD related services, month					
90922	E		ESRD related services, day					
90923	E		ESRD related services, day					
90924	E		ESRD related services, day					
90925	E		ESRD related services, day					
92019	T		Eye exam & treatment	0699	2.2303	121.69	47.46	24.34
96100	X		Psychological testing	0373	2.3288	127.06		25.41
96110	X		Developmental test, lim	0373	2.3288	127.06		25.41
96111	X		Developmental test, extend	0373	2.3288	127.06		25.41
96115	X		Neurobehavior status exam	0373	2.3288	127.06		25.41
96117	X		Neuropsych test battery	0373	2.3288	127.06		25.41
96920	T		Laser tx, skin < 250 sq cm	0012	0.7612	41.53	11.18	8.31
96921	T		Laser tx, skin 250–500 sq cm	0012	0.7612	41.53	11.18	8.31
96922	T		Laser tx, skin > 500 sq cm	0013	1.1302	61.66	14.20	12.33
99002	B		Device handling					
99140	B		Emergency anesthesia					
99375	E		Home health care supervision					
99378	E		Hospice care supervision					
A4671	B	NI	Disposable cycler set					
A4672	B	NI	Drainage ext line, dialysis					
A4673	B	NI	Ext line w easy lock connect					
A4674	B	NI	Chem/antisept solution, 8oz					
A4728	B	NI	Dialysate solution, non-dex					

TABLE 2.—ADDENDUM B CORRECTIONS AS CORRECTED BY THIS FEDERAL REGISTER DOCUMENT—Continued

CPT/ HCPCS	Status indicator	Condition	Description	APC	Relative weight	Payment rate	National unadjusted copayment	Minimum unadjusted copayment
A9507	K		Indium/111 capromab pendetid	1604	20.2752	1106.24		221.25
A9526	N	NI	Ammonia N–13, per dose					
A9527	D	DNG	I–131 tositumomab therapeut					
A9700	E		Echocardiography Contrast					
C1088	D	DNG	Laser Optic Tr Sys					0.65
C1774	K	DG	Darbepoetin alfa, 1 mcg	0734	0.0594	3.24		
E0141	Y		Rigid wheeled walker adj/fix					
E0165	A		Commode chair stationry det					
E0973	B		W/Ch access det adj armrest					
E0974	B		W/Ch access anti-rollback					
E0978	B		W/C acc,saf belt pelv strap					
E1065	B	DG	Wheelchair power attachment					
E1226	B		W/C access fully reclineback					
E1634	B	NI	Peritoneal dialysis clamp					
G0210	S		PET img wholebody dxlung			1450.00		290.00
G0213	S		PET img wholbody dx			1450.00		290.00
G0214	S		PET img wholebod init			1450.00		290.00
G0215	S		PETimg wholebod restag			1450.00		290.00
G0230	S		PET myocard viability post			1450.00		290.00
G0244	S		Observ care by facility topt	0339	6.6961	365.35		73.07
G0246	V		Followup eval of foot pt lop	0600	0.9278	50.62		10.12
G0247	T		Routine footcare pt w lops	0009	0.6652	36.29	8.34	7.26
G0248	S		Demonstrate use home inr mon	1503		150.00		30.00
G0272	X	DG	Naso/oro gastric tube pl MD	0272	1.4184	77.39	38.36	15.48
G0299	T	NF	Inser/repos single icd+leads	0108	452.6995	24699.74		4939.95
G0300	T	NF	Insert reposit lead dual+gen	0108	452.6995	24699.74		4939.95
G0308	A	NI	ESRD related svc 4+mo<2yrs					
G0309	A	NI	ESRD related svc 2–3mo<2yrs					
G0310	A	NI	ESRD related svc 1vst<2yr					
G0311	A	NI	ESRD related svs 4+mo 2–11 yr					
G0312	A	NI	ESRD relate svs 2–3 mo 2–11 y					
G0313	A	NI	ESRD related svs 1 mon 2–11 y					
G0314	A	NI	ESRD related svs 4+mo 12–19					
G0315	A	NI	ESRD related svs 2–3 mo 12–19					
G0316	A	NI	ESRD related svs 1 vis/ 12–19y					
G0317	A	NI	ESRD related svs 4+mo 20+yrs					
G0318	A	NI	ESRD related svs 2–3 mo 20+y					
G0319	A	NI	ESRD related svs 1 visit 20+y					
G0320	A	NI	ESRD related svs home undr 2					
G0321	A	NI	ESRD related svs home mo<2ys					
G0322	A	NI	ESRD related svs hom mo12–19					
G0328	A	NI	Fecal blood scrn immunoassay					
J1563	K		IV immune globulin	0905	0.8057	43.96		8.79
J2260	K		Inj milrinone lactate/5 MG	7007	0.2129	11.62		2.32
J2324	G		Nesiritide	9114		151.62		22.66
J7330	B		Cultured chondrocytes implnt					
J8700	K		Temozolomide	1086	0.0690	3.76		0.75
J9017	K		Arsenic trioxide	9012		34.32		6.86
K0560	N	DG	MCP joint 2-piece for implnt					
K0600	Y	NF	Functional neuromuscularstim					
K0607	Y	NF	Repl batt for AED					
K0614	Y	DG	Chem/antisept solution, 8oz					
K0615	Y	DG	SGD prerec mes >8min <=20min					
K0616	Y	DG	SGD prerec mes>20min <=40min.					
K0617	Y	DG	SGD prerec mes > 40min					
L3350	B		Shoe heel wedge					
L4350	A		Ankle control orthosi prefab					
L4360	A		Pneumati walking boot prefab					
L4386	A		Non-pneum walk boot prefab					
L5646	A		Below knee cushion socket					
L5648	A		Above knee cushion socket					
P9603	A		One-way allow prorated miles					
Q0137	K	NI	Darbepoetin alfa, non esrd	0734	0.0594	3.24		0.65
Q4078	N	DG	Ammonia N–13, per dose					
V2761	B	NI	Mirror coating					

TABLE 3.— HCPCS WITH STATUS INDICATORS THAT CHANGED FROM B TO Y

CPT/ HCPCS	Description
E0967	Wheelchair hand rims.
E0969	Wheelchair narrowing device.
E0977	Wheelchair wedge cushion.
E0980	Wheelchair safety vest.
E0994	Wheelchair arm rest.
E0997	Wheelchair caster w/ a fork.
E0998	Wheelchair caster w/o a fork.
E0999	Wheelchr pneumatic tire w/wh.
E1001	Wheelchair wheel.
E1035	Patient transfer system.
E1065	Wheelchair power attachment.
E1227	Wheelchair spec sz spec ht a.

TABLE 4.—HCPCS WITH STATUS INDICATORS THAT CHANGED FROM A TO Y.

CPT/ HCPCS	Description
A4221	Maint drug infus cath per wk.
A4222	Drug infusion pump supplies.
A4230	Infus insulin pump non needle.
A4231	Infusion insulin pump needle.
A4253	Blood glucose/reagent strips.
A4254	Battery for glucose monitor.
A4255	Glucose monitor platforms.
A4256	Calibrator solution/chips.
A4257	Replace Lensshield Cartridge.
A4258	Lancet device each.
A4259	Lancets per box.
A4265	Paraffin.
A4556	Electrodes, pair.
A4557	Lead wires, pair.
A4558	Conductive paste or gel.
A4595	TENS suppl 2 lead per month.
A4608	Transtracheal oxygen cath.
A4609	Trach suction cath clsed sys.
A4610	Trach sctn cath 72h clsedsys.
A4611	Heavy duty battery.
A4612	Battery cables.
A4613	Battery charger.
A4615	Cannula nasal.
A4616	Tubing (oxygen) per foot.
A4617	Mouth piece.
A4618	Breathing circuits.
A4619	Face tent.
A4620	Variable concentration mask.
A4621	Tracheotomy mask or collar.
A4624	Tracheal suction tube.
A4628	Oropharyngeal suction cath.
A4630	Repl bat t.e.n.s. own by pt.
A4631	Wheelchair battery.
A4633	Uvl replacement bulb.
A4635	Underarm crutch pad.
A4636	Handgrip for cane etc.
A4637	Repl tip cane/crutch/walker.
A4639	Infrared ht sys replcmnt pad.
A4640	Alternating pressure pad.
A7000	Disposable canister for pump.
A7001	Nondisposable pump canister.
A7002	Tubing used w suction pump.
A7003	Nebulizer administration set.
A7004	Disposable nebulizer sml vol.
A7005	Nondisposable nebulizer set.
A7006	Filtered nebulizer admin set.
A7007	Lg vol nebulizer disposable.

TABLE 4.—HCPCS WITH STATUS INDICATORS THAT CHANGED FROM A TO Y.—Continued

CPT/ HCPCS	Description
A7008	Disposable nebulizer prefill.
A7009	Nebulizer reservoir bottle.
A7010	Disposable corrugated tubing.
A7011	Nondispos corrugated tubing.
A7012	Nebulizer water collec devic.
A7013	Disposable compressor filter.
A7014	Compressor nondispos filter.
A7015	Aerosol mask used w nebulize.
A7016	Nebulizer dome & mouthpiece.
A7017	Nebulizer not used w oxygen.
A7018	Water distilled w/nebulizer.
A7019	Saline solution dispenser.
A7020	Sterile H2O or NSS w lgv neb.
A7025	Replace chest compress vest.
A7026	Replace chst cmprss sys hose.
A7030	CPAP full face mask.
A7031	Replacement facemask interfa.
A7032	Replacement nasal cushion.
A7033	Replacement nasal pillows.
A7034	Nasal application device.
A7035	Pos airway press headgear.
A7036	Pos airway press chinstrap.
A7037	Pos airway pressure tubing.
A7038	Pos airway pressure filter.
A7039	Filter, non disposable w pap.
A7044	PAP oral interface.
E0100	Cane adjust/fixed with tip.
E0105	Cane adjust/fixed quad/3 pro.
E0110	Crutch forearm pair.
E0111	Crutch forearm each.
E0112	Crutch underarm pair wood.
E0113	Crutch underarm each wood.
E0114	Crutch underarm pair no wood.
E0116	Crutch underarm each no wood.
E0117	Underarm springassist crutch.
E0130	Walker rigid adjust/fixed ht.
E0135	Walker folding adjust/fixed.
E0141	Rigid wheeled walker adj/fix.
E0142	Walker rigid wheeled with se.
E0143	Walker folding wheeled w/o s.
E0144	Enclosed walker w rear seat.
E0145	Walker whled seat/crutch att.
E0146	Folding walker wheels w seat.
E0147	Walker variable wheel resist.
E0148	Heavyduty walker no wheels.
E0149	Heavy duty wheeled walker.
E0153	Forearm crutch platform atta.
E0154	Walker platform attachment.
E0155	Walker wheel attachment, pair.
E0156	Walker seat attachment.
E0157	Walker crutch attachment.
E0158	Walker leg extenders set of 4.
E0159	Brake for wheeled walker.
E0160	Sitz type bath or equipment.
E0161	Sitz bath/equipment w/faucet.
E0162	Sitz bath chair.
E0163	Commode chair stationry fxd.
E0164	Commode chair mobile fixed a.
E0165	Commode chair stationry det.
E0166	Commode chair mobile detach.
E0167	Commode chair pail or pan.
E0168	Heavyduty/wide commode chair.
E0169	Seatlift incorp commodechair.
E0175	Commode chair foot rest.
E0176	Air pressre pad/cushion nonp.
E0177	Water press pad/cushion nonp.
E0178	Gel pressre pad/cushion nonp.
E0179	Dry pressre pad/cushion nonp.
E0180	Press pad alternating w pump.

TABLE 4.—HCPCS WITH STATUS INDICATORS THAT CHANGED FROM A TO Y.—Continued

CPT/ HCPCS	Description
E0181	Press pad alternating w/pump.
E0182	Pressure pad alternating pump.
E0184	Dry pressure mattress.
E0185	Gel pressure mattress pad.
E0186	Air pressure mattress.
E0187	Water pressure mattress.
E0191	Protector heel or elbow.
E0192	Pad wheelchr low press/posit.
E0193	Powered air flotation bed.
E0194	Air fluidized bed.
E0196	Gel pressure mattress.
E0197	Air pressure pad for mattress.
E0198	Water pressure pad for mattr.
E0199	Dry pressure pad for mattress.
E0200	Heat lamp without stand.
E0202	Phototherapy light w/photom.
E0205	Heat lamp with stand.
E0210	Electric heat pad standard.
E0215	Electric heat pad moist.
E0217	Water circ heat pad w/pump.
E0220	Hot water bottle.
E0221	Infrared heating pad system.
E0225	Hydrocollator unit.
E0230	Ice cap or collar.
E0235	Paraffin bath unit portable.
E0236	Pump for water circulating p.
E0238	Heat pad non-electric moist.
E0239	Hydrocollator unit portable.
E0249	Pad water circulating heat u.
E0250	Hosp bed fixed ht w/mattress.
E0251	Hosp bed fixed ht w/o mattress.
E0255	Hospital bed var ht w/mattress.
E0256	Hospital bed var ht w/o matt.
E0260	Hosp bed semi-electr w/matt.
E0261	Hosp bed semi-electr w/o matt.
E0265	Hosp bed total electr w/matt.
E0266	Hosp bed total elec w/o matt.
E0271	Mattress innerspring.
E0272	Mattress foam rubber.
E0275	Bed pan standard.
E0276	Bed pan fracture.
E0277	Powered pres-redu air mattrs.
E0280	Bed cradle.
E0290	Hosp bed fx ht w/o rails w/m.
E0291	Hosp bed fx ht w/o rail w/o.
E0292	Hosp bed var ht w/o rail w/o.
E0293	Hosp bed var ht w/o rail w/.
E0294	Hosp bed semi-elect w/ mattrs.
E0295	Hosp bed semi-elect w/o matt.
E0296	Hosp bed total elect w/matt.
E0297	Hosp bed total elect w/o matt.
E0305	Rails bed side half length.
E0310	Rails bed side full length.
E0316	Bed safety enclosure.
E0325	Urinal male jug-type.
E0326	Urinal female jug-type.
E0371	Nonpower mattress overlay.
E0372	Powered air mattress overlay.
E0373	Nonpowered pressure mattress.
E0424	Stationary compressed gas 02.
E0431	Portable gaseous 02.
E0434	Portable liquid 02.
E0439	Stationary liquid 02.
E0441	Oxygen contents, gaseous.
E0442	Oxygen contents, liquid.
E0443	Portable 02 contents, gas.
E0444	Portable 02 contents, liquid.
E0450	Volume vent stationary/porta.
E0454	Pressure ventilator.

TABLE 4.—HCPCS WITH STATUS INDICATORS THAT CHANGED FROM A TO Y.—Continued

CPT/ HCPCS	Description
E0455	Oxygen tent excl croup/ped t.
E0457	Chest shell.
E0459	Chest wrap.
E0460	Neg press vent portabl/statn.
E0461	Vol vent noninvasive interfa.
E0462	Rocking bed w/ or w/o side r.
E0480	Percussor elect/pneum home m.
E0482	Cough stimulating device.
E0483	Chest compression gen system.
E0484	Non-elec oscillatory pep dvc.
E0500	Ippb all types.
E0550	Humidif extens supple w ippb.
E0555	Humidifier for use w/ regula.
E0560	Humidifier supplemental w/ I.
E0565	Compressor air power source.
E0570	Nebulizer with compression.
E0571	Aerosol compressor for svneb.
E0572	Aerosol compressor adjust pr.
E0574	Ultrasonic generator w svneb.
E0575	Nebulizer ultrasonic.
E0580	Nebulizer for use w/ regulat.
E0585	Nebulizer w/ compressor & he.
E0590	Dispensing fee dme neb drug.
E0600	Suction pump portab hom modl.
E0601	Cont airway pressure device.
E0605	Vaporizer room type.
E0606	Drainage board postural.
E0607	Blood glucose monitor home.
E0610	Pacemaker monitr audible/vis.
E0615	Pacemaker monitr digital/vis.
E0617	Automatic ext defibrillator.
E0620	Cap bld skin piercing laser.
E0621	Patient lift sling or seat.
E0627	Seat lift incorp lift-chair.
E0628	Seat lift for pt furn-electr.
E0629	Seat lift for pt furn-non-el.
E0630	Patient lift hydraulic.
E0635	Patient lift electric.
E0636	PT support & positioning sys.
E0650	Pneuma compresor non-segment.
E0651	Pneum compressor segmental.
E0652	Pneum compres w/cal pressure.
E0655	Pneumatic appliance half arm.
E0660	Pneumatic appliance full leg.
E0665	Pneumatic appliance full arm.
E0666	Pneumatic appliance half leg.
E0667	Seg pneumatic appl full leg.
E0668	Seg pneumatic appl full arm.
E0669	Seg pneumatic appli half leg.
E0671	Pressure pneum appl full leg.
E0672	Pressure pneum appl full arm.
E0673	Pressure pneum appl half leg.
E0691	Uvl pnl 2 sq ft or less.
E0692	Uvl sys panel 4 ft.
E0693	Uvl sys panel 6 ft.
E0694	Uvl md cabinet sys 6 ft.
E0701	Helmet w face guard prefab.
E0720	Tens two lead.
E0730	Tens four lead.
E0731	Conductive garment for tens/.
E0744	Neuromuscular stim for scoli.
E0745	Neuromuscular stim for shock.
E0747	Elec osteogen stim not spine.
E0748	Elec osteogen stim spinal.
E0776	Iv pole.
E0779	Amb infusion pump mechanical.
E0780	Mech amb infusion pump <8hrs.
E0781	External ambulatory infus pu.
E0784	Ext amb infusn pump insulin.

TABLE 4.—HCPCS WITH STATUS INDICATORS THAT CHANGED FROM A TO Y.—Continued

CPT/ HCPCS	Description
E0791	Parenteral infusion pump sta.
E0840	Tract frame attach headboard.
E0850	Traction stand free standing.
E0855	Cervical traction equipment.
E0860	Tract equip cervical tract.
E0870	Tract frame attach footboard.
E0880	Trac stand free stand extrem.
E0890	Traction frame attach pelvic.
E0900	Trac stand free stand pelvic.
E0910	Trapeze bar attached to bed.
E0920	Fracture frame attached to b.
E0930	Fracture frame free standing.
E0935	Exercise device passive moti.
E0940	Trapeze bar free standing.
E0941	Gravity assisted traction de.
E0942	Cervical head harness/halter.
E0943	Cervical pillow.
E0944	Pelvic belt/harness/boot.
E0945	Belt/harness extremity.
E0946	Fracture frame dual w cross.
E0947	Fracture frame attachmnts pe.
E0948	Fracture frame attachmnts ce.
E0962	Wheelchair 1 inch cushion.
E0963	Wheelchair 2 inch cushion.
E0964	Wheelchair 3 inch cushion.
E0965	Wheelchair 4 inch cushion.
E0968	Wheelchair commode seat.
E1011	Ped wc modify width adjustm.
E1012	Int seat sys planar ped w/c.
E1013	Int seat sys contour ped w/c.
E1014	Reclining back add ped w/c.
E1015	Shock absorber for man w/c.
E1016	Shock absorber for power w/c.
E1017	HD shck absrbr for hd man wc.
E1018	HD shck absrber for hd powwc.
E1020	Residual limb support system.
E1025	Pedwc lat/thor sup nocontour.
E1026	Pedwc contoured lat/thor sup.
E1027	Ped wc lat/ant support.
E1031	Rollabout chair with casters.
E1037	Transport chair, ped size.
E1038	Transport chair, adult size.
E1210	Whlchr moto ful arm leg rest.
E1211	Wheelchair motorized w/ det.
E1225	Wheelchair spec sz semi-recl.
E1228	Wheelchair spec sz spec ht b.
E1230	Power operated vehicle.
E1231	Rigid ped w/c tilt-in-space.
E1232	Folding ped wc tilt-in-space.
E1233	Rig ped wc tltnspc w/o seat.
E1234	Fld ped wc tltnspc w/o seat.
E1235	Rigid ped wc adjustable.
E1236	Folding ped wc adjustable.
E1237	Rgd ped wc adjstabl w/o seat.
E1238	Fld ped wc adjstabl w/o seat.
E1296	Wheelchair special seat heig.
E1297	Wheelchair special seat dept.
E1298	Wheelchair spec seat depth/w.
E1310	Whirlpool non-portable.
E1340	Repair for DME, per 15 min.
E1353	Oxygen supplies regulator.
E1355	Oxygen supplies stand/rack.
E1372	Oxy suppl heater for nebuliz.
E1390	Oxygen concentrator.
E1405	O2/water vapor enrich w/heat.
E1406	O2/water vapor enrich w/o he.
E1700	Jaw motion rehab system.
E1701	Repl cushions for jaw motion.
E1702	Repl measr scales jaw motion.

TABLE 4.—HCPCS WITH STATUS INDICATORS THAT CHANGED FROM A TO Y.—Continued

CPT/ HCPCS	Description
E1800	Adjust elbow ext/flex device.
E1801	SPS elbow device.
E1802	Adjst forearm pro/sup device.
E1805	Adjust wrist ext/flex device.
E1806	SPS wrist device.
E1810	Adjust knee ext/flex device.
E1811	SPS knee device.
E1815	Adjust ankle ext/flex device.
E1816	SPS ankle device.
E1818	SPS forearm device.
E1820	Soft interface material.
E1821	Replacement interface SPSD.
E1825	Adjust finger ext/flex devc.
E1830	Adjust toe ext/flex device.
E1840	Adj shoulder ext/flex device.
E2000	Gastric suction pump hme mdl.
E2100	Bld glucose monitor w voice.
E2101	Bld glucose monitor w lance.
K0001	Standard wheelchair.
K0002	Stnd hemi (low seat) whlchr.
K0003	Lightweight wheelchair.
K0004	High strength ltwt whlchr.
K0005	Ultralightweight wheelchair.
K0006	Heavy duty wheelchair.
K0007	Extra heavy duty wheelchair.
K0009	Other manual wheelchair/base.
K0010	Stnd wt frame power whlchr.
K0011	Stnd wt pwr whlchr w control.
K0012	Ltwt portbl power whlchr.
K0014	Other power whlchr base.
K0015	Detach non-adjus hght armrst.
K0016	Detach adjust armrst cmplete.
K0017	Detach adjust armrest base.
K0018	Detach adjust armrst upper.
K0019	Arm pad each.
K0020	Fixed adjust armrest pair.
K0022	Reinforced back upholstery.
K0023	Planr back insrt foam w/strp.
K0024	Plnr back insrt foam w/hrdwr.
K0025	Hook-on headrest extension.
K0026	Back upholst lgtwt whlchr.
K0027	Back upholst other whlchr.
K0028	Manual fully reclining back.
K0029	Reinforced seat upholstery.
K0030	Solid plnr seat sngl dnsfoam.
K0031	Safety belt/pelvic strap.
K0032	Seat uphols lgtwt whlchr.
K0033	Seat upholstery other whlchr.
K0035	Heel loop with ankle strap.
K0036	Toe loop each.
K0037	High mount flip-up footrest.
K0038	Leg strap each.
K0039	Leg strap h style each.
K0040	Adjustable angle footplate.
K0041	Large size footplate each.
K0042	Standard size footplate each.
K0043	Ftrst lower extension tube.
K0044	Ftrst upper hanger bracket.
K0045	Footrest complete assembly.
K0046	Elevat legrst low extension.
K0047	Elevat legrst up hangr brack.
K0048	Elevate legrest complete.
K0049	Calf pad each.
K0050	Ratchet assembly.
K0051	Cam relese assem ftrst/lgrst.
K0052	Swingaway detach footrest.
K0053	Elevate footrest articulate.
K0054	Seat wdth 10–12/15/17/20 wc.
K0055	Seat dpth 15/17/18 ltwt wc.

TABLE 4.—HCPCS WITH STATUS INDICATORS THAT CHANGED FROM A TO Y.—Continued

CPT/ HCPCS	Description
K0056	Seat ht <17 or >=21 ltwt wc.
K0057	Seat wdth 19/20 hvy dty wc.
K0058	Seat dpth 17/18 power wc.
K0059	Plastic coated handrim each.
K0060	Steel handrim each.
K0061	Aluminum handrim each.
K0062	Handrim 8–10 vert/obliq proj.
K0063	Hndrm 12–16 vert/obliq proj.
K0064	Zero pressure tube flat free.
K0065	Spoke protectors.
K0066	Solid tire any size each.
K0067	Pneumatic tire any size each.
K0068	Pneumatic tire tube each.
K0069	Rear whl complete solid tire.
K0070	Rear whl compl pneum tire.
K0071	Front castr compl pneum tire.
K0072	Frnt cstr cmpl sem-pneum tir.
K0073	Caster pin lock each.
K0074	Pneumatic caster tire each.
K0075	Semi-pneumatic caster tire.
K0076	Solid caster tire each.
K0077	Front caster assem complete.
K0078	Pneumatic caster tire tube.
K0079	Wheel lock extension pair.
K0080	Anti-rollback device pair.
K0081	Wheel lock assembly complete.
K0082	22 nf deep cycl acid battery.
K0083	22 nf gel cell battery each.
K0084	Grp 24 deep cycl acid battry.
K0085	Group 24 gel cell battery.
K0086	U–1 lead acid battery each.
K0087	U–1 gel cell battery each.
K0088	Battry chrgr acid/gel cell.
K0089	Battery charger dual mode.
K0090	Rear tire power wheelchair.
K0091	Rear tire tube power whlchr.
K0092	Rear assem cmplt powr whlchr.
K0093	Rear zero pressure tire tube.
K0094	Wheel tire for power base.
K0095	Wheel tire tube each base.
K0096	Wheel assem powr base complt.
K0097	Wheel zero presure tire tube.
K0098	Drive belt power wheelchair.
K0099	Pwr wheelchair front caster.
K0100	Amputee adapter pair.
K0102	Crutch and cane holder.
K0103	Transfer board < 25″.
K0104	Cylinder tank carrier.
K0105	Iv hanger.
K0106	Arm trough each.
K0107	Wheelchair tray.
K0108	W/c component-accessory NOS.
K0114	Whlchr back suprt inr frame.
K0115	Back module orthotic system.
K0116	Back & seat modul orthot sys.
K0195	Elevating whlchair leg rests.
K0268	Humidifier nonheated w PAP.
K0452	Wheelchair bearings.
K0455	Pump uninterrupted infusion.
K0460	WC power add-on joystick.
K0461	WC power add-on tiller cntrl.
K0462	Temporary replacement eqpmnt.
K0531	Heated humidifier used w pap.
K0532	Noninvasive assist wo backup.
K0533	Noninvasive assist w backup.
K0534	Invasive assist w backup.
K0538	Neg pressure wnd thrpy pump.
K0539	Neg pres wnd thrpy dsg set.
K0540	Neg pres wnd thrp canister.

TABLE 4.—HCPCS WITH STATUS INDICATORS THAT CHANGED FROM A TO Y.—Continued

CPT/ HCPCS	Description
K0541	SGD prerecorded msg <= 8 min.
K0542	SGD prerecorded msg > 8 min.
K0543	SGD msg formed by spelling.
K0544	SGD w multi methods msg/accs.
K0545	SGD sftwre prgrm for PC/PDA.
K0546	SGD accessory, mounting systm.
K0547	SGD accessory NOC.
K0549	Hosp bed hvy dty xtra wide.
K0550	Hosp bed xtra hvy dty x wide.
L3964	Seo mobile arm sup att to wc.
L3965	Arm supp att to wc rancho ty.
L3966	Mobile arm supports reclinin.
L3968	Friction dampening arm supp.
L3969	Monosuspension arm/hand supp.
L3970	Elevat proximal arm support.
L3972	Offset/lat rocker arm w/ ela.
L3974	Mobile arm support supinator.

TABLE 5.—HCPCS WITH STATUS INDICATORS THAT CHANGED FROM E TO Y

CPT/ HCPCS	Description
A4232	Syringe w/needle insulin 3cc.
A4632	Infus pump rplcemnt battery.
E0188	Synthetic sheepskin pad.
E0189	Lambswool sheepskin pad.
E0218	Water circ cold pad w pump.
E0602	Manual breast pump.
E0740	Incontinence treatment systm.
E0760	Osteogen ultrasound stimltor.
E0765	Nerve stimulator for tx n&v.
K0610	Peritoneal dialysis clamp.
K0611	Disposable cycler set.
K0612	Drainage ext line, dialysis.
K0613	Ext line w/easy lock connect.
K0614	Chem/antisept solution, 8oz.

(Catalog of Federal Domestic Assistance Program No. 93.773, Medicare—Hospital Insurance; and Program No. 93.774, Medicare—Supplementary Medical Insurance Program)

Dated: December 22, 2003.

Ann C. Agnew,

Executive Secretary to the Department.

[FR Doc. 03–32016 Filed 12–24–03; 1:03 pm]

BILLING CODE 4120–01–P

DEPARTMENT OF HOMELAND SECURITY

Federal Emergency Management Agency

44 CFR Part 62

RIN 1660–AA29

National Flood Insurance Program (NFIP); Assistance to Private Sector Property Insurers; Extension of Term of Arrangement

AGENCY: Federal Emergency Management Agency (FEMA). Emergency Preparedness and Response Directorate, Department of Homeland Security.

ACTION: Interim final rule.

SUMMARY: FEMA is changing the current Financial Assistance/Subsidy Arrangement (the Arrangement) to extend its term of October 1, 2002, through December 31, 2003, to a term of October 1, 2002, through May 1, 2004. The Arrangement defines the duties and responsibilities of insurers that sell and service insurance under the Write Your Own (WYO) program. It also identifies the responsibilities of the Government to provide financial and technical assistance to these insurers.

DATES: Effective January 1, 2004. Comments on this interim final rule, should be received on or before March 1, 2004.

ADDRESSES: Please send your comments to the Rules Docket Clerk, Office of the General Counsel, Federal Emergency Management Agency, 500 C Street, SW., Room 840, Washington, DC 20472, (facsimile) 202–646–4536, or (e-mail) *rules@fema.gov*.

FOR FURTHER INFORMATION CONTACT: Edward L. Connor, FEMA, 500 C Street, SW., Washington, DC 20472, 202–646–3429 (Phone), 202–646–3445 (facsimile), or *Edward.Connor@dhs.gov* (e-mail).

SUPPLEMENTARY INFORMATION: On August 9, 2002, FEMA published in the **Federal Register**, 67 FR 51768, a final rule to revise the effective date of the Arrangement to agree with the new Arrangement year beginning October 1, 2002, and ending September 30, 2003.

FEMA had planned to make significant changes in the Arrangement regarding litigation issues effective October 1, 2003. The proposed rule for these changes was not published until October 14, 2003, 68 FR 59146. As an interim measure, an interim final rule was published September 5, 2003, 68 FR 52700, extending the Arrangement term beginning October 1, 2002, to December 31, 2003. No comments were received

on that interim final rule. It was anticipated that comments on the October 14, 2003, proposed rule could be reviewed and a final rule published effective January 1, 2004. However, as the final rule for these changes has not yet been published in the **Federal Register**, it is not feasible to complete the rulemaking for an effective date of January 1, 2004. WYO insurers need to receive an offer to enter into the Arrangement each year well in advance of the beginning of the Arrangement year. By extending the current Arrangement for an additional four months, the revised Arrangement with the litigation changes can be effective May 1, 2004, instead of postponing these changes to October 1, 2004. WYO insurers can always elect to cease participation in the WYO program at any time, so any insurer not desiring to participate for the additional four months of this extension may cease participation as of January 1, 2004.

Under this extension of the current Arrangement, the expense allowance provided for in Article III.B of APPENDIX A TO PART 62—FEDERAL EMERGENCY MANAGEMENT AGENCY, FEDERAL INSURANCE ADMINISTRATION, FINANCIAL ASSISTANCE/SUBSIDY ARRANGEMENT will remain the same for the additional four months as it is now, including the additional expense allowance of up to two percentage points for meeting marketing goals. This additional expense allowance will be based on the period October 1, 2002, through April 1, 2004.

National Environmental Policy Act

This interim final rule falls within the exclusion category 44 CFR part 10.8(d)(2)(ii), which addresses the preparation, revision, and adoption of regulations, directives, and other guidance documents related to actions that qualify for categorical exclusions. Qualifying for this exclusion and because no other extraordinary circumstances have been identified, this interim final rule will not require the preparation of either an environmental assessment or environmental impact statement as defined by the National Environmental Policy Act.

Executive Order 12866, Regulatory Planning and Review

We have prepared and reviewed this rule under the provisions of E.O. 12866, Regulatory Planning and Review. Under Executive Order 12866, 58 FR 51735, October 4, 1993, a significant regulatory action is subject to an Office of Management and Budget (OMB) review and the requirements of the Executive Order. The Executive Order defines ''significant regulatory action'' as one that is likely to result in a rule that may:

(1) have an annual effect on the economy of $100 million or more or adversely affect in a material way the economy, a sector of the economy, productivity, competition, jobs, the environment, public health or safety, or State, local, or tribal governments or communities;

(2) create a serious inconsistency or otherwise interfere with an action taken or planned by another agency;

(3) materially alter the budgetary impact of entitlements, grants, user fees, or loan programs or the rights and obligations of recipients thereof; or

(4) raise novel legal or policy issues arising out of legal mandates, the President's priorities, or the principles set forth in the Executive Order.

For the reasons that follow we have concluded that this interim final rule is neither an economically significant nor a significant regulatory action under the Executive Order. The interim final rule will not have an annual effect on the economy of $100 million or more or adversely affect in a material way the economy, the insurance sector, competition, or other sectors of the economy. It will create no serious inconsistency or otherwise interfere with an action taken or planned by another agency. It will not materially alter the budgetary impact of entitlements, grants, user fees, or loan programs or the rights and obligations of recipients thereof. Nor does it raise novel legal or policy issues arising out of legal mandates, the President's priorities, or the principles set forth in the Executive Order.

OMB has not reviewed this rule under the principles of Executive Order 12866.

Paperwork Reduction Act

This interim final rule does not contain a collection of information and it is therefore not subject to the provisions of the Paperwork Reduction Act of 1995 (44 U.S.C. 3501–3520).

Executive Order 13132, Federalism

Executive Order 13132, Federalism, dated August 4, 1999, sets forth principles and criteria that agencies must adhere to in formulating and implementing policies that have federalism implications, that is, regulations that have substantial direct effects on the States, or on the distribution of power and responsibilities among the various levels of government. Federal agencies must closely examine the statutory authority supporting any action that would limit the policymaking discretion of the States, and to the extent practicable, must consult with State and local officials before implementing any such action.

We have reviewed this rule under E.O. 13132 and have concluded that the rule does not have federalism implications as defined by the Executive Order. We have determined that the rule does not significantly affect the rights, roles, and responsibilities of States, and involves no preemption of State law nor does it limit State policymaking discretion.

Executive Order 12778, Civil Justice Reform

This interim final rule meets the applicable standards of section 2(b)(2) of E.O. 12778.

Administrative Procedure Act Statement

In general, FEMA publishes a rule for public comment before issuing a final rule, under the Administrative Procedure Act, 5 U.S.C. 533 and 44 CFR 1.12. The Administrative Procedure Act, however, provides an exception from that general rule where the agency for good cause finds the procedures for comment and response contrary to public interest. The public benefit of this rule is the continuation of the WYO arrangement without interruption. Therefore, we believe it is contrary to the public interest to delay the benefits of this rule. In accordance with the Administrative Procedure Act, 5 U.S.C. 553(d)(3), we find that there is good cause for the interim final rule to be published without prior public comment and without a full 30-day delayed effective date.

List of Subjects in 44 CFR Part 62

Flood insurance.

■ Accordingly, we amend 44 CFR Part 62 as follows:

PART 62—SALE OF INSURANCE AND ADJUSTMENT OF CLAIMS

■ 1. The authority citation for part 62 continues to read as follows:

Authority: 42 U.S.C. 4001 *et seq.*; Reorganization Plan No. 3 of 1978, 43 FR 41943, 3 CFR, 1978 Comp., p. 329; E.O. 12127 of Mar. 31, 1979, 44 FR 19367, 3 CFR, 1979 Comp., p. 376.

■ 2. In Appendix A to part 62, revise the first sentence of Article V, Section A to read as follows:

Appendix A to Part 62—Federal Emergency Management Agency, Federal Insurance Administration, Financial Assistance/Subsidy Arrangement

Article V * * *

A. This Arrangement shall be effective for the period October 1, 2002 through May 1, 2004. * * *

* * * * *

Dated: December 23, 2003.

Michael D. Brown,

Under Secretary, Emergency Preparedness and Response, Department of Homeland Security.

[FR Doc. 03–32198 Filed 12–30–03; 8:45 am]

BILLING CODE 9110–12–P

FEDERAL COMMUNICATIONS COMMISSION

47 CFR Part 32

[WC Docket No. 02–269; CC Docket No. 00–199; CC Docket No. 80–286; CC Docket No. 99–301; FCC 03–325]

Federal-State Joint Conference on Accounting Issues

AGENCY: Federal Communications Commission.

ACTION: Final rule; delay of effective date.

SUMMARY: This document further delays the implementation of four previously adopted accounting and reporting rule changes from January 1, 2004 through June 30, 2004. The Commission extends the delay of implementation in order to allow time for receipt and consideration of comments in response to recommendations by the Federal-State Joint Conference on Accounting Issues (Joint Conference).

DATES: The effective date for amendments to 47 CFR 32.5200, 32.6562 and 32.6620 published at 67 FR 5670, February 6, 2002, and delayed at 68 FR 38641, June 30, 2003, is further delayed through June 30, 2004.

FOR FURTHER INFORMATION CONTACT: Jane E. Jackson, Associate Chief, Wireline Competition Bureau, (202) 418–1500.

SUPPLEMENTARY INFORMATION: This is a summary of the Commission's Order adopted on December 17, 2003, and released on December 23, 2003. The full text of the document is available for public inspection and copying during regular business hours at the FCC Reference Information Center, Portals II, 445 12th Street, SW., Room CY–A257, Washington, DC 20554. This document may also be purchased from the Commission's duplicating contractor, Qualex International, Portals II, 445 12th Street, SW., Room CY–B402, Washington, DC 20554, telephone (202) 863–2893, facsimile (202) 863–2898, e-mail *qualexint@aol.com*.

Synopsis of Order

On November 12, 2002, the Commission released an order, 67 FR 77432, December 18, 2002, delaying until July 1, 2003 the implementation of four accounting and reporting requirement rule modifications previously adopted by the Commission as part of its biennial review of accounting requirements and Automated Reporting Management System (ARMIS) reporting requirements, Report and Order, 67 FR 5670, February 6, 2002. On June 24, 2003, the Commission released another order, 68 FR 38641, June 30, 2003, further delaying implementation until January 1, 2004. The Commission deferred the implementation of these four accounting and reporting requirement rule modifications in order to allow the Federal-State Joint Conference on Accounting Issues time to consider these and other accounting issues in formulating their recommendations to the Commission. These accounting and reporting rule changes are as follows: (1) Consolidation of Accounts 6621 through 6623 into Account 6620, with sub-accounts for wholesale and retail; (2) consolidation of Account 5230, Directory revenue, into Account 5200, Miscellaneous revenue; (3) consolidation of the depreciation and amortization expense accounts (Accounts 6561 through 6565) into Account 6562, Depreciation and amortization expenses; and (4) revised ''Loop Sheath Kilometers'' data collection in Table II of ARMIS Report 43–07.

On October 9, 2003, the Joint Conference submitted the result of a year-long study of the Commission's accounting rules and on-going proceedings related to the Commission's accounting requirements. The Joint Conference makes several recommendations that directly relate to the four accounting rule modifications that are scheduled to go into effect on January 1, 2004. Here, the Commission extends through June 30, 2004 the Commission's current delay of the effective date of four accounting rule modifications, to allow time for receipt and consideration of comments in response to the Joint Conference's recommendations.

Federal Communications Commission

William F. Caton,

Deputy Secretary.

[FR Doc. 03–32149 Filed 12–30–03; 8:45 am]

BILLING CODE 6712–07–P

DEPARTMENT OF TRANSPORTATION

Federal Motor Carrier Safety Administration

49 CFR Part 382

Federal Aviation Administration

14 CFR Part 121

Federal Transit Administration

49 CFR Part 655

Federal Railroad Administration

49 CFR Part 219

Research and Special Programs Administration

49 CFR Part 199

[Docket OST–2002–13435]

RIN 2105–AD35

Procedures for Transportation Workplace Drug and Alcohol Testing Programs: Drug and Alcohol Management Information System Reporting

AGENCIES: Federal Motor Carrier Safety Administration, Federal Aviation Administration, Federal Transit Administration, Federal Railroad Administration, and Research and Special Programs Administration, Department of Transportation.

ACTION: Final rule.

SUMMARY: Each of the Department of Transportation's drug and alcohol testing rules include requirements for select employers to submit drug and alcohol testing data to five Department of Transportation (DOT) agencies. In the past, these employers have been required to use agency-specific Management Information System (MIS) forms for this purpose, twenty-one different forms in all. The Department recently published a final rule revising these DOT agency MIS forms and transforming them into a single one-page form for use throughout all the DOT agencies. The requirement for use of the form is now in 49 CFR part 40. By this action, the DOT agencies endorse the use of this single form within their regulated industries,

provide their regulated employers with guidance for submission of the form, and amend their rules accordingly. The DOT agencies are: Federal Motor Carrier Safety Administration (FMCSA); Federal Aviation Administration (FAA); Federal Transit Administration (FTA); Federal Railroad Administration (FRA); and Research and Special Programs Administration (RSPA).

DATES: Effective December 31, 2003.

FOR FURTHER INFORMATION CONTACT:

Jim L. Swart, Drug and Alcohol Policy Advisor (S–1), Office of Drug and Alcohol Policy and Compliance, 400 Seventh Street, SW., Washington, DC 20590; telephone number (202) 366–3784 (voice), (202) 366–3897 (fax), or *jim.swart@ost.dot.gov* (e-mail).

Jerry Fulnecky, Office of Enforcement and Compliance (MC–EC), Federal Motor Carrier Safety Administration, 400 Seventh Street, SW., Washington, DC 20590; telephone number (202) 366–2096, or *jerry.fulnecky@fmsca.dot.gov* (e-mail).

Diane J. Wood, Drug Abatement Division, AAM–800, Office of Aerospace Medicine, Federal Aviation Administration, Washington, DC 20591, telephone number (202) 267–8442.

Harry Saporta, Office of Safety and Security (TPM–30), Federal Transit Administration, 400 Seventh Street, SW., Washington, DC 20590; telephone number (202) 366–2233, or *harry.saporta@fta.dot.gov.*

Lamar Allen, Alcohol and Drug Program Manager (RRS–11), Office of Safety, FRA, 1120 Vermont Avenue, NW., Washington, DC 20590; telephone number (202) 493–6313, or *lamar.allen@fra.dot.gov* (e-mail); or Kathy Schnakenberg, Drug and Alcohol Program Specialist, Office of Safety, FRA, telephone number (202) 262–4998, or *kathy.schnakenberg@fra.dot.gov* (e-mail).

Sheila Wright, Office of Pipeline Safety (DPS–2), Research and Special Programs Administration, 400 Seventh Street, S.W., Washington, DC 20590, telephone number (202) 366–4554, or *sheila.wright@rspa.dot.gov* (e-mail).

SUPPLEMENTARY INFORMATION

Background and Purpose

The Department published a final rule on July 25, 2003 (68 FR 43946) regarding a single one-page MIS form for use throughout all DOT. The Department had issued a notice of proposed rulemaking (NPRM) on September 30, 2002 (67 FR 61306), asking for comments and suggestions for changes to the MIS form and process. In response to the NPRM, we received numerous comments from individuals, groups, and associations. The final rule responded to all those comments. The final rule also made significant modifications to the previous DOT agency MIS forms.

In the final rule, the Department stated that use of the new MIS form will be required for employer MIS submissions in 2004, which will document 2003 data. Therefore, employers must adopt provisions of the rule which will permit them to start, as appropriate, collection of the required data and which establish how companies are to determine the number of employees upon which 2003 random testing is based.

The Department also indicated that the new MIS form represents a reduction in the data elements for which an employer must account. The following is a listing for each DOT agency of most of the data elements that have been eliminated as reporting elements on the new MIS form:

FMCSA

1. Number of persons denied a position following a positive drug test.
2. Number of employees returned to duty following a refusal or positive drug test.
3. Supervisor initial drug training data.
4. Number of employees denied a position following an alcohol test of 0.04 or greater.
5. Number of employees returned to duty after engaging in alcohol misuse.
6. Number of employees having both a positive drug test and an alcohol test of 0.04 or greater when both tests were administered at the same time.
7. Actions taken for alcohol violations other than alcohol testing.
8. Supervisor initial alcohol training data.

FAA

1. Number of employees returned to duty after having failed or refused a drug test.
2. Actions taken for drug test refusals.
3. Number of persons denied employment for a positive drug test.
4. Actions taken for positive drug results.
5. Employee initial drug training data.
6. Supervisor initial drug training data.
7. Supervisor recurrent drug training data.
8. Number of persons denied a position for an alcohol test 0.04 or greater.
9. Number of employees returned to duty after engaging in alcohol misuse.
10. Actions taken for alcohol regulation violations.
11. Number of employees having both a positive drug test and an alcohol test of 0.04 or greater when both tests were administered at the same time.
12. Number of other violations of the alcohol regulation.
13. Actions taken for refusals to take an alcohol test.
14. Supervisor alcohol training data.
15. Periodic testing data.

FTA

1. Number of persons denied a position for alcohol results 0.04 or greater.
2. Number of accidents (noted as fatal and non-fatal) with alcohol results 0.04 or greater.
3. Number of fatalities from accidents resulting in alcohol results 0.04 or greater.
4. Number of employees returned to duty following an alcohol violation.
5. Number of employees having both a positive drug test and an alcohol test of 0.04 or greater when both tests were administered at the same time.
6. Actions taken for other alcohol rule violations.
7. Supervisor alcohol training data.
8. Number of persons denied a position for positive drug test results.
9. Number of accidents (noted as fatal and non-fatal) with positive drug test results.
10. Number of fatalities from accidents resulting in positive drug tests results.
11. Number of persons returned to duty following a positive drug test or refusal result.
12. Employee drug education data.
13. Supervisor drug training data.
14. Funding source information.

FRA

1. Number of applicants/transfers denied employment/transfer for a positive drug test.
2. Number of employees returned to duty after having failed or refused a drug test.
3. Detailed breakouts of for-cause drug and alcohol testing.
4. Non-qualifying accident drug testing data.
5. Supervisor drug training data.
6. Number of applicants/transfers denied employment/transfer for alcohol results 0.04 or greater.
7. Number of employees returned to duty after engaging in alcohol misuse.
8. Supervisor alcohol training data.

RSPA

1. Number of employees returned to duty after engaging in alcohol misuse.
2. Actions taken for alcohol test results equal to or greater than 0.04.

3. Number of other alcohol rule violations and actions taken for them.

4. Actions taken for alcohol test refusals.

5. Supervisor initial alcohol training data.

6. Number of persons denied a position following a positive drug test.

7. Number of employees returned to duty following a positive or refusal drug test.

8. Actions taken for positive drug tests.

9. Actions taken for drug test refusals.

10. Supervisor initial drug training data.

Finally, the Department stated that the DOT agencies would continue, in their regulations, to provide direction to their regulated employers regarding when, where, and how to report MIS data. The DOT agency final rules published today are designed to amend their rules so that regulated industries will report MIS data in accordance with 49 CFR part 40. In addition, the DOT agency final rules are designed so that no conflicts exist between them and part 40 regarding how the MIS form is to be completed and how the instructions are to be followed.

General Discussion of Rule Changes

The DOT agencies are amending several sections of their drug and alcohol testing regulations to incorporate references to the new one-page MIS form and its instructions found in 49 CFR part 40. In addition, other revisions are being made in an effort to conform MIS-related regulatory text used by the DOT agencies. Specifically, the items reflecting use of conforming language are as follows:

1. Definitions of ''positive rate for random drug testing'' and ''violation rate for random alcohol testing'' will conform throughout the regulations and will replace ''annualized rate,'' ''positive rate,'' and ''violation rate,'' as appropriate. Both definitions will reflect how the DOT agencies will determine whether the random rates of testing within their regulated industries will rise, lower, or stay the same from year to year. It is important to note that RSPA has no random alcohol testing requirement and will, therefore, not include a definition for the ''violation rate for random alcohol testing.''

2. 49 CFR part 40 also clarified and made uniform among DOT agencies how employers determine the total number of employees to which the annual random rate applies. The averaging method highlighted in part 40 has been adopted in DOT agency rule text. The rules direct employers to add the number of covered employees eligible for random testing in each random testing selection period for the year and divide that total by the number of random testing periods. The rules also reference employers' use of service agents (*e.g.*, Consortium/Third-Party Administrators) in their random testing programs.

3. Each DOT agency rule incorporates common language requiring use of the MIS form and the instructions found in 49 CFR part 40. The rules also permit employers to use the electronic version of the MIS form as designated by DOT agency administrators and furnished by DOT. Specific internet addresses are provided in DOT agency rules. As referenced in the preamble to 49 CFR part 40, the Department's ultimate goal of having full automation for MIS submissions has been accomplished. Through Volpe Center development and field-testing, the automated system will be fully operational across all DOT agencies at the end of 2003.

4. DOT agency rules also include conforming language regarding how employers, with covered employees performing duties under more than one DOT agency rule, are to enter testing data for those employees. In short, the employee needs to be counted only on the MIS report for the DOT agency under which he or she is random tested. It is important to note, that the FAA requires all employees performing FAA safety-sensitive duties to be tested (including random) under FAA regulations. Otherwise, this will be the DOT agency under which the employee performs more than 50% of his or her duties.

5. Finally, the conforming language addresses the preparation of the MIS form and who must attest to its accuracy. The regulations give employers the ability to have service agents (*e.g.*, Consortium/Third-Party Administrators) prepare the report on their behalf. However, no matter who prepares the report, a company official (*e.g.*, Designated Employer Representative as defined in 49 CFR part 40) must certify the accuracy and completeness of the form.

Other Significant Issues

Regarding 49 CFR part 40 and the MIS form, the OMB number assigned to the form is 2105–0529. This number was issued by OMB on October 28, 2003.

The Docket number assigned to the part 40 MIS final rule was OST–2003–15676. It should have been, OST–2002–13433. This will serve to correct that error.

DOT has been asked how specimen results are to be counted if the verified result is a refusal because the specimen was found to be both adulterated and substituted. While these types of results rarely occur, they do nonetheless exist. Such a specimen result is to be counted as one test result. If this type of result is present in an employer's testing program, the data should be entered as ''1'' for the test result and as ''.5'' for the adulterated result and as''.5'' for the substituted result.

In addition, it is possible for a positive test to also be identified as being a refusal because the specimen was either adulterated or substituted. If such a result is present in an employer's testing program, the data should be entered as ''1'' for the test result and as ''.5'' for the positive result and as ''.5'' for the adulterated result or the substituted result, as appropriate. The electronic MIS data entry system has been designed to accommodate these ''.5'' results, no matter how infrequently they occur.

Section 1, of the MIS form in 49 CFR part 40, references the ''FMSCA.'' That should read, ''FMCSA.'' MIS forms that appear on the DOT website reflect the appropriate change. Electronic formats designed for use by the FMCSA and their regulated industry also reflect the change.

Finally, the United States Coast Guard (USCG) will incorporate use of the new MIS form into their rules. Therefore, USCG-regulated employers will continue to report drug testing data on the new MIS form. The DOT supports the USCG in their desire to use and to incorporate use of DOT's MIS form into their regulation. Because the USCG is part of the Department of Homeland Security (DHS), their regulations must be published under the authority of DHS. Therefore, the USCG will publish a conforming amendment to 46 CFR part 16 incorporating use of the form.

Regulatory Analyses and Notices

These rules are not significant rules for purposes of Executive Order 12866 or the DOT's regulatory policies and procedures. Nor are the rules economically significant regulations. They represent a reworking of existing requirements, the economic burden of which are now incorporated into 49 CFR part 40; they impose no new mandates; and they will not create any new costs. In fact, use of the new MIS form has been shown to reduce requirements and costs. The DOT agencies will no longer account for the PRA cost associated with use of the form. These costs are now accounted for by the Office of the Secretary.

In addition, there is no need for the DOT agencies to publish an NPRM each regarding use of the new MIS form and

to make the conforming regulation changes necessitated by use of the new form. The Department issued an NPRM in the **Federal Register** on September 30, 2002 (Vol. 67, No. 189) proposing use of a new MIS form and asking for comments and suggestions for changes to the old DOT agency MIS forms and the process for completing and submitting them. The final rule designating use and appearance of and instructions for the new MIS form was published in the **Federal Register** on July 25, 2003 (Vol. 68, No. 143). These DOT agency final rules are essentially administrative fix-ups to align DOT agency rules with part 40 on important MIS issues. Therefore, these DOT agency amendments are being issued as final rules.

Under the Administrative Procedure Act (APA), an agency may, for good cause, immediately promulgate a final rule if it finds that prior notice and opportunity for comment ''are impracticable, unnecessary, or contrary to the public interest'' [5 U.S.C. 553(b)(3)(B)]. There exists good cause for the final rules to be effective immediately rather than 30 days from today's publication date. It is imperative that companies are prepared to implement the new MIS system and know the DOT agency requirements for form submission. That preparation should not be delayed for an additional 30 days. For these and the reasons highlighted in the previous paragraph, the rules are effective today.

These final rules do not have sufficient Federalism impact to warrant a Federalism assessment under Executive Order 13132. With respect to the Regulatory Flexibility Act, the DOT agencies certify that these rules would not have a significant economic impact on a substantial number of small entities, so a Regulatory Flexibility analysis has not been prepared. Even though these rules might affect a large number of small entities, we do not expect the use of a single MIS form throughout all DOT-regulated industries to have a significant economic impact on anyone.

The Department's final MIS rule contained information collection requirements that were submitted, as required by the Paperwork Reduction Act of 1995 (the PRA, 44 U.S.C. 3507(d)), to the Office of Information and Regulatory Affairs of the Office of Management and Budget (OMB) for review. Therefore, the DOT agencies will remove PRA requirements for the MIS form from their next PRA submission packages. In addition, the Department will place its entire PRA package for the MIS form on the Internet when that submission is approved by OMB.

As stated in the Department's final MIS rule, according to OMB's regulations implementing the PRA (5 CFR 1320.8(b)(2)(vi)), an agency may not conduct or sponsor, and a person need not respond to a collection of information unless it displays a currently valid OMB number. As stated earlier, the OMB number issued to the form is 2105–0529.

A number of other Executive Orders can affect rulemakings. These include Executive Orders 13084 (Consultation and Coordination with Indian Tribal Governments), 12988 (Civil Justice Reform), 12875 (Enhancing the Intergovernmental Partnership), 12630 (Governmental Actions and Interference with Constitutionally Protected Property Rights), 12898 (Federal Actions to Address Environmental Justice in Minority Populations and Low-Income Populations), 13045 (Protection of Children from Environmental Health Risks and Safety Risks), and 12889 (Implementation of North American Free Trade Agreement). We have considered these Executive Orders in the context of these rules, and we believe that these rules do not directly affect matters that the Executive Orders cover.

We have prepared these rulemakings in accordance with the Presidential Directive on Plain Language.

Federal Motor Carrier Safety Administration

Summary of Changes in Part 382

FMCSA has made the following changes to the regulatory text in part 382:

Section 382.107 Definitions

We have revised the definitions for ''positive rate'' for random drug testing and ''violation rate'' for random alcohol testing, consistent with the definitions for those terms in part 40.

Section 382.305 Random Testing

We have revised § 382.305(j), concerning how employers determine the number of covered employees eligible for random testing, to conform with the methodology prescribed in part 40.

Section 382.401 Retention of Records

We have revised § 382.401(c)(1)(viii) to replace ''Consolidated annual calendar year summaries'' with ''Each annual calendar year summary.''

Section 382.403 Reporting of results in a management information system

Section 382.403 was amended to require use of the new Management Information System (MIS) form in part 40, in place of the old FMCSA forms. In subparagraph (b), the requirement that the form should be in ''the form and manner prescribed by the FMCSA'' was deleted. We now require employers to use either the paper form in part 40 or an electronic version of the form through the FMCSA web site. We deleted former subparagraphs (c) and (d) specifying the data elements that were required to be reported because the instructions for the MIS form in part 40 specify new data elements to be reported. The former subparagraph (e), which addresses employers subject to more than one DOT agency, has been redesignated as paragraph (c), and was amended to conform with part 40 agencies. The former subparagraph (f), which addresses employers who use service agents (*e.g.*, a Consortia/third party administrator (C/TPA)), has been redesignated as paragraph (d) and was also amended.

List of Subjects in 49 CFR Part 382

Alcohol abuse, Drug abuse, Drug testing, Highway safety, Motor carriers, Penalties, Safety, Transportation.

49 CFR Chapter III

Authority and Issuance

■ For reasons discussed in the preamble, the Federal Motor Carrier Safety Administration amends part 382 of title 49, Code of Federal Regulations, as follows:

PART 382—CONTROLLED SUBSTANCES AND ALCOHOL USE AND TESTING

■ 1. The authority citation for 49 CFR part 382 continues to read as follows:

Authority: 49 U.S.C. 31133, 31136, 31301 *et seq.*, 31502; and 49 CFR 1.73.

■ 2. Amend § 382.107 by removing the definitions of ''positive rate'' and ''violation rate'' and adding the following definitions in their place to read as follows:

§ 382.107 Definitions.

* * * * *

Positive rate for random drug testing means the number of verified positive results for random drug tests conducted under this part plus the number of refusals of random drug tests required by this part, divided by the total number of random drug tests results (*i.e.*,

positives, negatives, and refusals) under this part.

* * * * *

Violation rate for random alcohol testing means the number of 0.04 and above random alcohol confirmation test results conducted under this part plus the number of refusals of random alcohol tests required by this part, divided by the total number of random alcohol screening tests (including refusals) conducted under this part.

■ 3. Amend § 382.305 by revising paragraph (j) to read as follows:

§ 382.305 Random testing.

* * * * *

(j)(1)To calculate the total number of covered drivers eligible for random testing throughout the year, as an employer, you must add the total number of covered drivers eligible for testing during each random testing period for the year and divide that total by the number of random testing periods. Covered employees, and only covered employees, are to be in an employer's random testing pool, and all covered drivers must be in the random pool. If you are an employer conducting random testing more often than once per month (*e.g.*, daily, weekly, bi-weekly) you do not need to compute this total number of covered drivers rate more than on a once per month basis.

(2) As an employer, you may use a service agent (*e.g.*, a C/TPA) to perform random selections for you, and your covered drivers may be part of a larger random testing pool of covered employees. However, you must ensure that the service agent you use is testing at the appropriate percentage established for your industry and that only covered employees are in the random testing pool.

* * * * *

■ 4. Amend § 382.401 by revising paragraph (c)(1)(viii) to read as follows:

§ 382.401 Retention of records.

* * * * *

(c) * * *

(1) * * *

(viii) A copy of each annual calendar year summary as required by § 382.403.

* * * * *

■ 5. Amend § 382.403 by revising paragraph (b), removing paragraphs (c) and (d), redesignating paragraphs (e) and (f) as (c) and (d), respectively, and revising them, and adding a new paragraph (e) to read as follows:

§ 382.403 Reporting of results in a management information system.

* * * * *

(b) If an employer is notified, during the month of January, of a request by the Federal Motor Carrier Safety Administration to report the employer's annual calendar year summary information, the employer shall prepare and submit the report to the FMCSA by March 15 of that year. The employer shall ensure that the annual summary report is accurate and received by March 15 at the location that the FMCSA specifies in its request. The employer must use the Management Information System (MIS) form and instructions as required by 49 CFR part 40 (at § 40.26 and appendix H to part 40). The employer may also use the electronic version of the MIS form provided by the DOT. The Administrator may designate means (*e.g.*, electronic program transmitted via the Internet), other than hard-copy, for MIS form submission. For information on the electronic version of the form, see: *http://www.fmcsa.dot.gov/safetyprogs/drugs/engtesting.htm.*

(c) When the report is submitted to the FMCSA by mail or electronic transmission, the information requested shall be typed, except for the signature of the certifying official. Each employer shall ensure the accuracy and timeliness of each report submitted by the employer or a consortium.

(d) If you have a covered employee who performs multi-DOT agency functions (*e.g.*, an employee drives a commercial motor vehicle and performs pipeline maintenance duties for the same employer), count the employee only on the MIS report for the DOT agency under which he or she is randomly tested. Normally, this will be the DOT agency under which the employee performs more than 50% of his or her duties. Employers may have to explain the testing data for these employees in the event of a DOT agency inspection or audit.

(e) A service agent (*e.g., Consortia/Third party administrator* as defined in 49 CFR 382.107) may prepare the MIS report on behalf of an employer. However, a company official (*e.g., Designated employer representative*) must certify the accuracy and completeness of the MIS report, no matter who prepares it.

Dated: November 25, 2003.

Annette M. Sandberg,

Administrator, Federal Motor Carrier Safety Administration.

Federal Aviation Administration

FAA's Section-by-Section Discussion

14 CFR Part 121, Appendix I

II. Definitions

The FAA has eliminated the definition for ''annualized rate'' because the definition is no longer necessary in light of the DOT's final rule. However, the definition for annualized rate had contained instructions to estimate the number of employees that must be tested during the calendar year based on the number of safety-sensitive employees as of the beginning of the calendar year. The DOT's final rule changed this method of calculation. Now, to determine how many employees to randomly test during the calendar year, the employer must use the average number of safety-sensitive employees instead of the number of employees as of the beginning of the calendar year. Because this change occurred during the 2003 calendar year, we recognize that employers may have difficulty estimating the number of safety-sensitive employees to be tested in 2003. Therefore, for the calendar year 2003 only, employers may use the number of employees as of the beginning of the calendar year to determine the total number of safety-sensitive employees to be tested or the employers may use the averaging method described in this regulation and 49 CFR part 40. Beginning in 2004, the new methodology must be used by all employers.

In addition, we have revised the definition of ''positive rate'' and changed the defined term to ''positive rate for random drug testing,'' for the reasons discussed in the DOT's General Discussion of Rule Changes.

V. Types of Drug Testing Required

C. Random Testing. We revised paragraph 6 under the random testing section to make it clear to employers how to calculate whether they have met the minimum annual percentage rate under 49 CFR part 40. For the reasons explained in the DOT's General Discussion of Rule Changes, we inserted paragraph 6(b) to address the use of service agents to conduct random testing for employers. We added paragraphs 6(b)(1)–(2) to explain what annual percentage rate applies to pools created by service agents.

VI. Administrative and Other Matters

F. DOT Management Information System Annual Reports. For consistency with 14 CFR part 121, appendix J, we have added this paragraph to make it clear that employers must keep copies of annual reports submitted to the FAA for a minimum of 5 years. This is not an additional record keeping requirement because the MIS reports were already required to be kept for 5 years under 14 CFR part 121, appendix J, section IV, A.2.(a)(1). Since the MIS reports for both drug and alcohol testing

have been combined, this addition is merely a reminder to employers of an existing obligation to retain the record.

X. Reporting of Antidrug Program Results

We changed the title of this section to ''Annual Reports'' because the DOT's revisions to the MIS forms no longer require separate reporting of antidrug program results. The combined MIS form is now submitted for both drug and alcohol testing results.

The basic requirements of when to submit annual reports and who must submit them remain unchanged in this section. However, most of section X has been eliminated because it prescribed the specifics of the contents of annual reports, all of which are now prescribed by 49 CFR 40.26 and appendix H to 49 CFR part 40. For the reasons explained in the DOT's General Discussion of Rule Changes, we have adopted the DOT's language for submitting MIS reports and the role of service agents in those submissions.

14 CFR Part 121, Appendix J

I. General

D. Definitions. We have revised the definition of ''violation rate'' and changed the defined term to ''violation rate for random alcohol testing,'' for the reasons discussed in the DOT's General Discussion of Rule Changes. Although there was no definition for ''annualized percentage rate'' under this appendix, the reasoning provided in the preamble to appendix I applies to calculating the number of employees to be tested in calendar year 2003 for appendix J also.

II. Covered Employees

In revising the annual reporting requirements of section IV.B., we decided to move former paragraph IV.B.2 to become a new paragraph under section II, which describes covered employees. Former paragraph IV.B.2 reminded employers to identify employees who are performing safety-sensitive functions under the regulations of more than one DOT agency. This is important because alcohol testing must be tied to the performance of safety-sensitive work. When the employer requires the employee to submit to an alcohol test, the employer must know what kind of safety-sensitive work the employee is performing and which DOT agency's testing regulations apply. In moving this paragraph to section II, we made minor editorial changes to the language and renumbered paragraphs accordingly.

III. Tests Required

C. Random Testing. We revised paragraph 2 under the random testing section to change the phrase ''alcohol MIS reports'' to ''MIS reports.'' We made this change because the DOT's revisions to 49 CFR part 40 eliminated separate forms for alcohol testing results. There is now a combined form for reporting both drug and alcohol testing results.

As we have done in appendix I, we revised paragraph 6 under this section to make it clear to employers how to calculate whether they have met the minimum annual percentage rate under the DOT's final rule. For the reasons explained in the DOT's General Discussion of Rule Changes, we inserted paragraph 6(b) to address the use of service agents to conduct random testing for employers. We added paragraphs 6(b)(1)–(2), as we have done in appendix I, to explain what annual percentage rate applies to pools created by service agents.

IV. Handling of Test Results, Record Retention and Confidentiality

B. Reporting of Results in a Management Information System. We changed the title of this section to ''Annual Reports'' for consistency with appendix I.

The basic requirements of when to submit annual reports and who must submit them remain unchanged in this section. However, most of section IV has been eliminated because it prescribed the specifics of the contents of annual reports, all of which are now prescribed by 49 CFR 40.26 and appendix H to 49 CFR part 40. For the reasons explained in the DOT's General Discussion of Rule Changes, we have adopted the DOT's language for submitting MIS reports and the role of service agents in those submissions.

International Compatibility

In keeping with U.S. obligations under the Convention on International Civil Aviation, it is FAA policy to comply with International Civil Aviation Organization (ICAO) Standards and Recommended Practices to the maximum extent practicable. The FAA has reviewed the corresponding ICAO Standards and Recommended Practices and has identified no differences with these regulations.

List of Subjects in 14 CFR Part 121

Air carriers, Aircraft, Airmen, Alcohol abuse, Aviation safety, Charter flights, Drug abuse, Drug testing, Reporting and recordkeeping requirements, Safety, Transportation.

14 CFR Chapter I

Authority and Issuance

■ For reasons set forth in the preamble, the Federal Aviation Administration amends part 121 of title 14, Code of Federal Regulations, as follows:

PART 121—OPERATING REQUIREMENTS: DOMESTIC, FLAG, AND SUPPLEMENTAL OPERATIONS

■ 1. The authority citation for 14 CFR part 121 is revised to read as follows:

Authority: 49 U.S.C. 106(g), 40113, 40119, 41706, 44101, 44701–44702, 44705, 44709–44711, 44713, 44716–44717, 44722, 44901, 44903–44904, 44912, 45101–45105, 46105, 46301.

■ 2. Amend appendix I to part 121 as follows:

■ A. In section II., remove the definition of Annualized rate; remove the definition of Positive rate and add a new definition in its place;

■ B. In section V., revise paragraph C.6;

■ C. In section VI., add paragraph F;

■ D. In section X., revise section heading, revise paragraphs A introductory text and A.2, revise paragraph B, remove paragraphs C, D, E, F, add new paragraph C.

The revisions and additions read as follows:

Appendix I to Part 121—Drug Testing Program

* * * * *

II. Definitions * * *

* * * * *

Positive rate for random drug testing means the number of verified positive results for random drug tests conducted under this appendix plus the number of refusals of random drug tests required by this appendix, divided by the total number of random drug test results (*i.e.*, positives, negatives, and refusals) under this appendix.

* * * * *

V. Types of Drug Testing Required * * *

* * * * *

C. Random Testing.

* * * * *

6. As an employer, you must select and test a percentage of employees at least equal to the minimum annual percentage rate each year.

(a) As an employer, to determine whether you have met the minimum annual percentage rate, you must divide the number of random testing results for safety-sensitive employees by the average number of safety-sensitive employees eligible for random testing.

(1) To calculate whether you have met the annual minimum percentage rate, count all random positives, random negatives, and random refusals as your ''random testing results.''

(2) To calculate the average number of safety-sensitive employees eligible for

random testing throughout the year, add the total number of safety-sensitive employees eligible for testing during each random testing period for the year and divide that total by the number of random testing periods. Only safety-sensitive employees are to be in an employer's random testing pool, and all safety-sensitive employees must be in the random pool. If you are an employer conducting random testing more often than once per month (*e.g.*, you select daily, weekly, bi-weekly) you do not need to compute this total number of safety-sensitive employees more than on a once per month basis.

(b) As an employer, you may use a service agent to perform random selections for you, and your safety-sensitive employees may be part of a larger random testing pool of safety-sensitive employees. However, you must ensure that the service agent you use is testing at the appropriate percentage established for your industry and that only safety-sensitive employees are in the random testing pool. For example:

(1) If the service agent has your employees in a random testing pool for your company alone, you must ensure that the testing is conducted at least at the minimum annual percentage rate under this part.

(2) If the service agent has your employees in a random testing pool combined with other FAA-regulated companies, you must ensure that the testing is conducted at least at the minimum annual percentage rate under this part.

(3) If the service agent has your employees in a random testing pool combined with other DOT-regulated companies, you must ensure that the testing is conducted at least at the highest rate required for any DOT-regulated company in the pool.

* * * * *

VI. Administrative and Other Matters * * *

* * * * *

F. *DOT Management Information System Annual Reports.* Copies of any annual reports submitted to the FAA under this appendix must be maintained by the employer for a minimum of 5 years.

* * * * *

X. Annual Reports.

A. Annual reports of testing results must be submitted to the FAA by March 15 of the succeeding calendar year for the prior calendar year (January 1 through December 31) in accordance with the provisions below.

* * * * *

2. Each entity conducting an antidrug program under this part, other than a part 121 certificate holder, that has 50 or more employees performing a safety-sensitive function on January 1 of any calendar year shall submit an annual report to the FAA for that calendar year.

* * * * *

B. As an employer, you must use the Management Information System (MIS) form and instructions as required by 49 CFR part 40 (at 49 CFR 40.26 and appendix H to 49 CFR part 40). You may also use the electronic version of the MIS form provided by DOT. The Administrator may designate means (*e.g.*, electronic program transmitted via the Internet) other than hard-copy, for MIS form submission. For information on where to submit MIS forms and for the electronic version of the form, see: *http://www.faa.gov/avr/aam/adap.*

C. A service agent may prepare the MIS report on behalf of an employer. However, a company official (*e.g.*, Designated Employer Representative as defined in 49 CFR part 40) must certify the accuracy and completeness of the MIS report, no matter who prepares it.

* * * * *

■ 3. Amend appendix J to part 121 as follows:

■ A. In section I.D, remove the definition of Violation rate and add a definition in its place;

■ B. Revise section II;

■ C. In section III.C, revise paragraphs C.2 and C.6;

■ D. Revise section IV.B.

The revisions and additions read as follows:

Appendix J to Part 121—Alcohol Misuse Prevention Program

* * * * *

I. General * * *

* * * * *

D. Definitions

* * * * *

Violation rate for random alcohol testing means the number of 0.04 and above random alcohol confirmation test results conducted under this appendix plus the number of refusals of random alcohol tests required by this appendix, divided by the total number of random alcohol screening tests (including refusals) conducted under this appendix.

* * * * *

II. Covered Employees

A. Each employee who performs a function listed in this section directly or by contract for an employer as defined in this appendix must be subject to alcohol testing under an FAA-approved alcohol misuse prevention program implemented in accordance with this appendix. The covered safety-sensitive functions are:

1. Flight crewmember duties.
2. Flight attendant duties.
3. Flight instruction duties.
4. Aircraft dispatcher duties.
5. Aircraft maintenance or preventive maintenance duties.
6. Ground security coordinator duties.
7. Aviation screening duties.
8. Air traffic control duties.

B. Each employer must identify any employee who is subject to the alcohol testing regulations of more than one DOT agency. Prior to conducting any alcohol test on a covered employee subject to the alcohol testing regulations of more than one DOT agency, the employer must determine which DOT agency authorizes or requires the test.

III. Tests Required * * *

* * * * *

C. Random Testing

* * * * *

2. The Administrator's decision to increase or decrease the minimum annual percentage rate for random alcohol testing is based on the violation rate for the entire industry. All information used for this determination is drawn from MIS reports required by this appendix. In order to ensure reliability of the data, the Administrator considers the quality and completeness of the reported data, may obtain additional information or reports from employers, and may make appropriate modifications in calculating the industry violation rate. Each year, the Administrator will publish in the **Federal Register** the minimum annual percentage rate for random alcohol testing of covered employees. The new minimum annual percentage rate for random alcohol testing will be applicable starting January 1 of the calendar year following publication.

* * * * *

6. As an employer, you must select and test a percentage of employees at least equal to the minimum annual percentage rate each year.

(a) As an employer, to determine whether you have met the minimum annual percentage rate, you must divide the number of random alcohol screening test results for safety-sensitive employees by the average number of safety-sensitive employees eligible for random testing.

(1) To calculate whether you have met the annual minimum percentage rate, count all random screening test results below 0.02 breath alcohol concentration, random screening test results of 0.02 or greater breath alcohol concentration, and random refusals as your ''random alcohol screening test results.''

(2) To calculate the average number of safety-sensitive employees eligible for random testing throughout the year, add the total number of safety-sensitive employees eligible for testing during each random testing period for the year and divide that total by the number of random testing periods. Only safety-sensitive employees are to be in an employer's random testing pool, and all safety-sensitive employees must be in the random pool. If you are an employer conducting random testing more often than once per month (*e.g.*, you select daily, weekly, bi-weekly) you do not need to compute this total number of safety-sensitive employees more than on a once per month basis.

(b) As an employer, you may use a service agent to perform random selections for you, and your safety-sensitive employees may be part of a larger random testing pool of safety-sensitive employees. However, you must ensure that the service agent you use is testing at the appropriate percentage established for your industry and that only safety-sensitive employees are in the random testing pool. For example:

(1) If the service agent has your employees in a random testing pool for your company alone, you must ensure that the testing is conducted at least at the minimum annual percentage rate under this part.

(2) If the service agent has your employees in a random testing pool combined with other FAA-regulated companies, you must ensure that the testing is conducted at least

at the minimum annual percentage rate under this part.

(3) If the service agent has your employees in a random testing pool combined with other DOT-regulated companies, you must ensure that the testing is conducted at least at the highest rate required for any DOT-regulated company in the pool.

* * * * *

IV. Handling of Test Results, Record Retention, and Confidentiality * * *

* * * * *

B. Reporting of Results in a Management Information System

1. Annual reports of alcohol misuse prevention program results must be submitted to the FAA by March 15 of the succeeding calendar year for the prior calendar year (January 1 through December 31) in accordance with the provisions below.

(a) Each part 121 certificate holder shall submit an annual report each year.

(b) Each entity conducting an alcohol misuse prevention program under this part, other than a part 121 certificate holder, that has 50 or more employees performing a safety-sensitive function on January 1 of any calendar year shall submit an annual report to the FAA for that calendar year.

(c) The Administrator reserves the right to require that aviation employers not otherwise required to submit annual reports prepare and submit such reports to the FAA. Employers that will be required to submit annual reports under this provision will be notified in writing by the FAA.

2. As an employer, you must use the Management Information System (MIS) form and instructions as required by 49 CFR part 40 (at 49 CFR 40.26 and appendix H to 49 CFR part 40). You may also use the electronic version of the MIS form provided by the DOT. The Administrator may designate means (*e.g.*, electronic program transmitted via the Internet) other than hard-copy, for MIS form submission. For information on where to submit MIS forms and for the electronic version of the form, see: *http://www.faa.gov/avr/aam/adap.*

3. A service agent may prepare the MIS report on behalf of an employer. However, a company official (*e.g.*, Designated Employer Representative as defined in 49 CFR part 40) must certify the accuracy and completeness of the MIS report, no matter who prepares it.

* * * * *

Dated: November 25, 2003.

Marion C. Blakey,

Administrator, Federal Aviation Administration.

Federal Transit Administration

List of Subjects in 49 CFR Part 655

Alcohol abuse, Drug testing, Grant programs—transportation, Mass transportation, Reporting and recordkeeping requirements, Safety, Transportation.

49 CFR Chapter VI

Authority and Issuance

■ For reasons set forth in the preamble, the Federal Transit Administration amends part 655 of title 49, Code of Federal Regulations, as follows:

PART 655—PREVENTION OF ALCOHOL MISUSE AND PROHIBITED DRUG USE IN TRANSIT OPERATIONS

■ 1. The authority citation for 49 CFR part 655 continues to read as follows:

Authority: 49 U.S.C. 5331; 49 CFR 1.51.

■ 2. In § 655.4, remove the definitions of ''positive rate'' and ''violation rate'' and add the following definitions in their place to read as follows:

§ 655.4 Definitions.

* * * * *

Positive rate for random drug testing means the number of verified positive results for random drug tests conducted under this part plus the number of refusals of random drug tests required by this part, divided by the total number of random drug tests results (*i.e.*, positive, negative, and refusals) under this part.

* * * * *

Violation rate for random alcohol testing means the number of 0.04 and above random alcohol confirmation test results conducted under this part plus the number of refusals of random alcohol tests required by this part, divided by the total number of alcohol random screening tests (including refusals) conducted under this part.

* * * * *

■ 3. Revise § 655.72(d) through (g) to read as follows:

§ 655.72 Reporting of results in a Management Information System.

* * * * *

(d) As an employer, you must use the Management Information System (MIS) form and instructions as required by 49 CFR part 40, § 40.25 and appendix H. You may also use the electronic version of the MIS form provided by the DOT. The Administrator may designate means (*e.g.*, electronic program transmitted via the Internet), other than hard-copy, for MIS form submission. For information on where to submit MIS forms and for the electronic version of the form, see: *http://transit-safety.volpe.dot.gov\DAMIS.*

(e) To calculate the total number of covered employees eligible for random testing throughout the year, as an employer, you must add the total number of covered employees eligible for testing during each random testing period for the year and divide that total by the number of random testing periods. Covered employees, and only covered employees, are to be in an employer's random testing pool, and all covered employees must be in the random pool. If you are an employer conducting random testing more often than once per month (*e.g.*, you select daily, weekly, bi-weekly), you do not need to compute this total number of covered employees rate more than on a once per month basis. As an employer, you may use a service agent (*e.g.*, C/TPA) to perform random selections for you; and your covered employees may be part of a larger random testing pool of covered employees. However, you must ensure that the service agent you use is testing at the appropriate percentage established for your industry and that only covered employees are in the random testing pool.

(f) If you have a covered employee who performs multi-DOT agency functions (*e.g.*, an employee drives a paratransit vehicle and performs pipeline maintenance duties for you), count the employee only on the MIS report for the DOT agency under which he or she is random tested. Normally, this will be the DOT agency under which the employee performs more than 50% of his or her duties. Employers may have to explain the testing data for these employees in the event of a DOT agency inspection or audit.

(g) A service agent (*e.g.*, Consortia/Third Party Administrator as defined in 49 CFR part 40) may prepare the MIS report on behalf of an employer. However, a company official (*e.g.*, Designated Employer Representative as defined in 49 CFR part 40) must certify the accuracy and completeness of the MIS report, no matter who prepares it.

Appendices A Through D [Removed]

■ 4. Remove Appendices A through D to part 655.

Dated: November 21, 2003.

Jennifer L. Dorn,

Administrator, Federal Transit Administration.

Federal Railroad Administration

Section-by-Section Analysis

Section 219.5 Definitions

Positive rate for random drug testing. A standardized DOT definition replaces the previous FRA definition of ''positive rate.''

Violation rate for random testing. A standardized DOT definition replaces the previous FRA definition of ''violation rate.''

Section 219.601 Railroad Random Drug Testing Programs

Paragraph (b)(2)(ii) Form of Programs

FRA amends this paragraph to conform with the Department's new directions on how to calculate the number of covered employees eligible for random testing. An employer or service agent acting on the employer's behalf (*e.g.*, a consortium or third party administrator) must recalculate this number for each random testing period to take into account seasonal or other fluctuations in the number of employees it has throughout the year. An employer had previously been allowed to calculate this number only once per year based on the number of employees it had at the beginning of the year.

Section 219.602 Administrator's Determination of Railroad Drug Testing Rate

Paragraphs (c) and (d)

FRA is revising these paragraphs to replace the references to § 219.803, which contained agency-specific railroad reporting requirements, with references to new § 219.800, which incorporates by reference the standardized and simplified DOT reporting requirements found in § 40.25 and in appendix H to part 40. Section 219.803 is removed and reserved.

Section 219.607 Railroad Random Alcohol Testing Programs

Subparagraph (b)(1) Form of Programs

As with § 219.601 discussed above, FRA revises this subparagraph to conform with the Department's new directions on how to calculate the number of covered employees eligible for random testing.

Subparagraph (b)(1)(i)

As with § 219.601 discussed above, FRA adds this new subparagraph to address the increasing use of service agents to perform random drug testing selections.

Section 219.608 Administrator's Determination of Railroad Alcohol Testing Rate

Paragraphs (c) and (d)

FRA is revising these paragraphs to replace the references to § 219.801, which contained agency-specific railroad reporting requirements, with references to new § 219.800, which incorporates by reference the standardized and simplified DOT reporting requirements found in § 40.25 and in appendix H to part 40. Section 219.801 is removed and reserved.

Section 219.800 Annual Reports

Paragraph (a)

As explained above, FRA is streamlining its MIS system by combining the annual reporting requirements formerly contained in §§ 219.801 and 219.803 into one section. This paragraph, which defines who must file an annual report, adopts the language formerly found in paragraph (a) of each of those sections.

Paragraphs (b)–(e)

Paragraph (b) incorporates part 40's forms and instructions by reference. Paragraphs (c)–(e) add standardized instructions on electronic reporting, reporting of multi-modal employee results, and reporting by service agents.

Section 219.801 Reporting Alcohol Misuse Program Results in a Management Information System

As explained above, this section is removed and reserved. The FRA-specific reporting requirements formerly contained in this section are removed and replaced by those contained in new § 219.800.

Section 219.803 Reporting Alcohol Misuse Program Results in a Management Information System

As explained above, this section is removed and reserved. The FRA-specific reporting requirements formerly contained in this section are removed and replaced by those contained in new § 219.800.

Federal Railroad Administration

List of Subjects in 49 CFR Part 219

Alcohol abuse, Drug abuse, Drug testing, Penalties, Railroad safety, Reporting and recordkeeping requirements, Safety, Transportation.

49 CFR Chapter II

Authority and Issuance

■ For reasons set forth in the preamble, the Federal Railroad Administration amends part 219 of title 49, Code of Federal Regulations, as follows:

PART 219—CONTROL OF ALCOHOL AND DRUG USE

■ 1. The authority citation for 49 CFR part 219 continues to read as follows:

Authority: 49 U.S.C. 20103, 20107, 20140, 21301, 21304, 21311, 28 U.S.C. 2461, note; and 49 CFR 1.49(m).

■ 2. In § 219.5, the definitions of ''positive rate'' and ''violation rate'' are removed and the following definitions are added in their place to read as follows:

§ 219.5 Definitions.

* * * * *

Positive rate for random drug testing means the number of verified positive results for random drug tests conducted under this part plus the number of refusals of random drug tests required by this part, divided by the total number of random drug tests results (*i.e.*, positives, negatives, and refusals) under this part.

* * * * *

Violation rate for random alcohol testing means the number of 0.04 and above random alcohol confirmation test results conducted under this part plus the number of refusals of random alcohol tests required by this part, divided by the total number of random alcohol screening tests (including refusals) conducted under this part.

* * * * *

■ 3. Section 219.601 is amended by revising paragraph (b)(2)(ii) and adding paragraph (b)(2)(iii) to read as follows:

§ 219.601 Railroad random drug testing programs.

* * * * *

(b) * * *

(2) * * *

(ii) To calculate the total number of covered employees eligible for random testing throughout the year, as a railroad, you must add the total number of covered employees eligible for testing during each random testing period for the year and divide that total by the number of random testing periods. Covered employees, and only covered employees, are to be in a railroad's random testing pool, and all covered employees must be in the random pool. If you are a railroad conducting random testing more often than once per month (*e.g.*, you select daily, weekly, bi-weekly), you do not need to compute this total number of covered employees rate more than on a once per month basis.

(iii) As a railroad, you may use a service agent (*e.g.*, C/TPA) to perform random selections for you, and your covered employees may be part of a larger random testing pool of covered employees. However, you must ensure that the service agent you use is testing at the appropriate percentage established for your industry and that only covered employees are in the random testing pool.

* * * * *

■ 4. Section 219.602 is amended by revising paragraphs (c) and (d) to read as follows:

§ 219.602 Administrator's determination of random drug testing rate.

* * * * *

(c) When the minimum annual percentage rate for random drug testing is 50 percent, the Administrator may lower this rate to 25 percent of all covered employees if the Administrator determines that the data received under the reporting requirements of § 219.800 for two consecutive calendar years indicate that the reported positive rate is less than 1.0 percent.

(d) When the minimum annual percentage rate for random drug testing is 25 percent, and the data received under the reporting requirements of § 219.800 for any calendar year indicate that the reported positive rate is equal to or greater than 1.0 percent, the Administrator will increase the minimum annual percentage rate for random drug testing to 50 percent of all covered employees.

* * * * *

■ 5. Section 219.607 is amended by revising paragraph (b)(1) to read as follows:

§ 219.607 Railroad random alcohol testing programs.

* * * * *

(b) * * *

(1) As a railroad, to calculate the total number of covered employees eligible for random testing throughout the year, you must add the total number of covered employees eligible for testing during each random testing period for the year and divide that total by the number of random testing periods. Covered employees, and only covered employees, are to be in a railroad's random testing pool, and all covered employees must be in the random pool. If you are a railroad conducting random testing more often than once per month (*e.g.*, you select daily, weekly, bi-weekly), you do not need to compute this total number of covered employees rate more than on a once per month basis.

(i) As a railroad, you may use a service agent (*e.g.*, C/TPA) to perform random selections for you, and your covered employees may be part of a larger random testing pool of covered employees. However, you must ensure that the service agent you use is testing at the appropriate percentage established for your industry and that only covered employees are in the random testing pool.

(ii) [Reserved]

* * * * *

■ 6. Section 219.608 is amended by revising paragraphs (c) and (d) to read as follows:

§ 219.608 FRA Administrator's determination of random alcohol testing rate.

* * * * *

(c)(1) When the minimum annual percentage rate for random alcohol testing is 25 percent or more, the Administrator may lower this rate to 10 percent of all covered employees if the Administrator determines that the data received under the reporting requirements of § 219.800 for two consecutive calendar years indicate that the violation rate is less than 0.5 percent.

(2) When the minimum annual percentage rate for random alcohol testing is 50 percent, the Administrator may lower this rate to 25 percent of all covered employees if the Administrator determines that the data received under the reporting requirements of § 219.800 for two consecutive calendar years indicate that the violation rate is less than 1.0 percent but equal to or greater than 0.5 percent.

(d)(1) When the minimum annual percentage rate for random alcohol testing is 10 percent, and the data received under the reporting requirements of § 219.800 for that calendar year indicate that the violation rate is equal to or greater than 0.5 percent, but less than 1.0 percent, the Administrator will increase the minimum annual percentage rate for random alcohol testing to 25 percent of all covered employees.

(2) When the minimum annual percentage rate for random alcohol testing is 25 percent or less, and the data received under the reporting requirements of § 219.800 for any calendar year indicate that the violation rate is equal to or greater than 1.0 percent, the Administrator will increase the minimum annual percentage rate for random alcohol testing to 50 percent of all covered employees.

* * * * *

■ 7. Section 219.800 is added to subpart I to read as follows:

§ 219.800 Annual reports.

(a) Each railroad that has 400,000 or more total manhours shall submit to FRA by March 15 of each year a report covering the previous calendar year (January 1–December 31), summarizing the results of its alcohol and drug misuse prevention program. As used in this paragraph, the term ''employees of the railroad'' includes individuals who perform service for the railroad, including not only individuals who receive direct monetary compensation from the railroad for performing a service for the railroad, but also such individuals as employees of a contractor to the railroad who perform a service for the railroad.

(b) As a railroad, you must use the Management Information System (MIS) form and instructions as required by 49 CFR part 40 (at § 40.25 and appendix H to part 40). You may also use the electronic version of the MIS form provided by the DOT. The Administrator may designate means (*e.g.*, electronic program transmitted via the Internet), other than hard-copy, for MIS form submission to FRA. For information on where to submit MIS forms and for the electronic version of the form, see: *http://www.fra.dot.gov/Content3.asp?P=504*.

(c) Each railroad shall ensure the accuracy and timeliness of each report submitted.

(d) As a railroad, if you have a covered employee who performs multi-DOT agency functions (*e.g.*, an employee drives a commercial motor vehicle and performs switchman duties for you), count the employee only on the MIS report for the DOT agency under which he or she is random tested. Normally, this will be the DOT agency under which the employee performs more than 50% of his or her duties. Railroads may have to explain the testing data for these employees in the event of a DOT agency inspection or audit.

(e) A service agent (*e.g.*, a consortium/third party administrator) may prepare the MIS report on behalf of a railroad. However, a railroad official (*e.g.*, a designated employee representative) must certify the accuracy and completeness of the MIS report, no matter who prepares it.

§§ 219.801 and 219.803 [Removed and Reserved]

■ 8. Sections 219.801 and 219.803 are removed and reserved.

Dated: November 20, 2003.

Allan Rutter,

Federal Railroad Administration.

Research and Special Programs Administration

Section-by-Section Discussion of Rule Changes for RSPA

RSPA has amended several sections of 49 CFR part 199 to conform to 49 CFR part 40 Procedures for Transportation Workplace Drug and Alcohol Testing Programs: Drug and Alcohol Management Information System Reporting final rule. The specific changes to the regulatory text in part 199 are described below.

Section 199.3 Definitions

The definition for ''positive rate'' for random drug testing is being modified in § 199.3 in order to be consistent with the standardized DOT definition.

Section 199.117 Recordkeeping

Subparagraph (a)(2) of § 199.117 has been revised to include a requirement to maintain MIS drug testing data for 5 years to parallel the requirement for maintaining MIS alcohol testing data at § 199.227(b)(1). Subparagraphs (a)(2)(i)(ii)(iii) and (4) of § 199.117 have been removed because the retention of the data previously required by these paragraphs will be captured in the MIS data retention requirement. Subparagraph (5) of § 199.117 has been redesignated as subparagraph (4).

Section 199.119 Reporting of Anti-Drug Testing Results

Paragraph (a) of § 199.119 has been revised to require use of the new Management Information System (MIS) form and instructions required by part 40. Paragraph (b) of § 199.119 has been revised to include electronic submission of drug testing MIS reports and correct the room number for submitting paper versions of these reports. Paragraph (c) of § 199.119 has been revised to be consistent with part 40 on how operators are to determine the number of covered employees eligible for random drug testing. Paragraph (d) of § 199.119 has been revised to specify an operator's responsibility when using a service agent to perform random selections. Paragraph (e) of § 199.119 has been revised to provide instructions on how to report random drug testing MIS data for employees covered by more than one DOT agency, consistent with part 40. Paragraph (f) of § 199.119 has been revised to specify who may prepare drug testing MIS reports.

Section 199.229—Reporting of Alcohol Testing Results

Paragraph (a) of § 199.229 has been revised to require use of the new Management Information System (MIS) form and instructions required by part 40. Paragraph (b) of § 199.229 has been revised to provide instructions on how to report alcohol testing MIS data for employees covered by more than one DOT agency, consistent with part 40. Paragraph (c) of § 199.229 has been revised to include electronic submission of alcohol testing MIS reports and correct the room number for submitting paper versions of these reports. Former paragraph (d) and subparagraphs (d)(1)(2)(3)(i)(ii)(4)(5)(6)(7)(8)(9)(10) of § 199.229 have been removed because RSPA now requires use of the part 40 MIS form and the instructions for this form specify the data elements to be reported. Former paragraph (e) and subparagraphs (e)(1)(2)(3)(4)(5) of § 199.229 have been removed because the instructions for the MIS form in part 40 specify the data elements to be reported. Former paragraph (f) of § 199.229 permitting consortium to prepare MIS reports has been re-designated as paragraph (d) and revised to include service agents and third party administrators as defined in part 40.

List of Subjects in 49 CFR Part 199

Alcohol testing, Drug testing, Operators, Pipeline safety, Recordkeeping and reporting.

49 CFR Chapter I

Authority and Issuance

■ For reasons discussed in the preamble, the Research and Special Programs Administration amends part 199 of title 49, Code of Federal Regulations, as follows:

PART 199—DRUG AND ALCOHOL TESTING

■ 1. The citation of authority for 49 CFR part 199 continues to read as follows:

Authority: 49 U.S.C. 5103, 60102, 60104, 60108, 60117, and 60118; 49 CFR 1.53.

■ 2. Amend § 199.3 by removing the definition for ''positive rate'' and adding the following definition in its place to read as follows:

§ 199.3 Definitions.

* * * * *

Positive rate for random drug testing means the number of verified positive results for random drug tests conducted under this part plus the number of refusals of random drug tests required by this part, divided by the total number of random drug tests results (*i.e.*, positives, negatives, and refusals) under this part.

* * * * *

■ 3. Amend § 199.117 by revising paragraph (a)(2), removing paragraph (a)(4) and redesignating paragraph (a)(5) as paragraph (a)(4) and revising it to read as follows:

§ 199.117 Recordkeeping.

* * * * *

(a) * * *

(2) Records of employee drug test that indicate a verified positive result, records that demonstrate compliance with the recommendations of a substance abuse professional, and MIS annual report data shall be maintained for a minimum of five years.

* * * * *

(4) Records confirming that supervisors and employees have been trained as required by this part must be kept for at least 3 years.

* * * * *

■ 4. Revise § 199.119 to read as follows:

§ 199.119 Reporting of anti-drug testing results.

(a) Each large operator (having more than 50 covered employees) shall submit an annual MIS report to RSPA of its anti-drug testing using the Management Information System (MIS) form and instructions as required by 49 CFR part 40 (at § 40.25 and appendix H to Part 40), not later than March 15 of each year for the prior calendar year (January 1 through December 31). The Administrator shall require by written notice that small operators (50 or fewer covered employees) not otherwise required to submit annual MIS reports to prepare and submit such reports to RSPA.

(b) Each report, required under this section, shall be submitted to the Office of Pipeline Safety Compliance (OPS), Research and Special Programs Administration, Department of Transportation, room 2103, 400 Seventh Street, SW., Washington, DC 20590. The operator may submit a paper report or data electronically using the version of the MIS form provided by DOT. This electronic version of the form can be accessed via the Internet at the following Office of Pipeline Safety web address: *http://ops.dot.gov/drug.htm*.

(c) To calculate the total number of covered employees eligible for random testing throughout the year, as an operator, you must add the total number of covered employees eligible for testing during each random testing period for the year and divide that total by the number of random testing periods. Covered employees, and only covered employees, are to be in an employer's random testing pool, and all covered employees must be in the random pool. If you are an employer conducting random testing more often than once per month (*e.g.*, you select daily, weekly, bi-weekly), you do not need to compute this total number of covered employees rate more than on a once per month basis.

(d) As an employer, you may use a service agent (*e.g.*, C/TPA) to perform random selections for you; and your covered employees may be part of a larger random testing pool of covered employees. However, you must ensure that the service agent you use is testing at the appropriate percentage established for your industry and that only covered employees are in the random testing pool.

(e) Each operator that has a covered employee who performs multi-DOT agency functions (*e.g.*, an employee performs pipeline maintenance duties and drives a commercial motor vehicle), count the employee only on the MIS report for the DOT agency under which he or she is randomly tested. Normally, this will be the DOT agency under which the employee performs more than 50% of his or her duties. Operators may have to explain the testing data for these employees in the event of a DOT agency inspection or audit.

(f) A service agent (*e.g.*, Consortia/Third Party Administrator as defined in 49 CFR part 40) may prepare the MIS report on behalf of an operator. However, each report shall be certified by the operator's anti-drug manager or designated representative for accuracy and completeness.

■ 5. Revise § 199.229 to read as follows:

§ 199.229 Reporting of alcohol testing results.

(a) Each large operator (having more than 50 covered employees) shall submit an annual MIS report to RSPA of its alcohol testing results using the Management Information System (MIS) form and instructions as required by 49 CFR part 40 (at § 40.25 and appendix H to part 40), not later than March 15 of each year for the previous calendar year (January 1 through December 31). The Administrator may require by written notice that small operators (50 or fewer covered employees) not otherwise required to submit annual MIS reports to prepare and submit such reports to RSPA.

(b) Each operator that has a covered employee who performs multi-DOT agency functions (*e.g.*, an employee performs pipeline maintenance duties and drives a commercial motor vehicle), count the employee only on the MIS report for the DOT agency under which he or she is tested. Normally, this will be the DOT agency under which the employee performs more than 50% of his or her duties. Operators may have to explain the testing data for these employees in the event of a DOT agency inspection or audit.

(c) Each report, required under this section, shall be submitted to the Office of Pipeline Safety Compliance (OPS), Research and Special Programs Administration, Department of Transportation, room 2103, 400 Seventh Street, SW., Washington, DC 20590. The operator may report data electronically using the version of the MIS form provided by DOT. This form can be accessed via the Internet at the following Office of Pipeline Safety web address: *http://ops.dot.gov/drug.htm.*

(d) A service agent (*e.g.*, Consortia/Third Party Administrator as defined in part 40) may prepare the MIS report on behalf of an operator. However, each report shall be certified by the operator's anti-drug manager or designated representative for accuracy and completeness.

Dated: December 11, 2003.

Samuel G. Bonasso,

Acting Administrator, Research and Special Programs Administration.

[FR Doc. 03–31887 Filed 12–30–03; 8:45 am]

BILLING CODE 4910–62–P

DEPARTMENT OF COMMERCE

National Oceanic and Atmospheric Administration

50 CFR Part 635

[I.D.122303H]

Atlantic Highly Migratory Species; Bluefin Tuna Fisheries

AGENCY: National Marine Fisheries Service (NMFS), National Oceanic and Atmospheric Administration (NOAA), Commerce.

ACTION: Quota transfers; fishery reopening.

SUMMARY: NMFS adjusts the coastwide General category quota for the Atlantic bluefin tuna (BFT) fishery by transferring 15.0 metric tons (mt) from the Longline North subcategory quota, 12 mt from the Longline South subcategory quota and 3 mt from the Trap category to the coastwide General category for a revised quota of approximately 564.4 mt. NMFS reopens the coastwide BFT General category for the time period of 12:30 a.m. January 2 through 11:30 p.m. January 3, 2004 inclusive. These actions are being taken to allow for maximum utilization of the U.S. BFT landings quota while maintaining a fair distribution of fishing opportunities, preventing overharvest of the adjusted quotas for the affected fishing categories, helping to achieve optimum yield in the General category fishery, and allowing the collection of a broad range of data for stock monitoring purposes, consistent with the objectives of the Fishery Management Plan for Atlantic Tunas, Swordfish, and Sharks (HMS FMP).

DATES: The quota transfers are effective December 24, 2003, through May 31, 2004. The coastwide General category reopening is effective 12:30 a..m. January 2 through 11:30 p.m. January 3, 2004.

FOR FURTHER INFORMATION CONTACT: Brad McHale at 978–281–9260.

SUPPLEMENTARY INFORMATION: Regulations implemented under the authority of the Atlantic Tunas Convention Act (16 U.S.C. 971 *et seq.*) and the Magnuson-Stevens Fishery Conservation and Management Act (Magnuson-Stevens Act; 16 U.S.C. 1801 *et seq.*) governing the harvest of BFT by persons and vessels subject to U.S. jurisdiction are found at 50 CFR part 635. Section 635.27 subdivides the U.S. BFT quota recommended by the International Commission for the Conservation of Atlantic Tunas (ICCAT) among the various domestic fishing categories, and together with General category effort controls are specified annually as required under 50 CFR 635.23(a) and 635.27(a). The final initial 2003 BFT quota and General category effort controls were published on October 2, 2003 (68 FR 56783). A final rule to adjust certain size limits and commercial BFT seasons, including extending the General category through January 31 each year was published December 24, 2003 (68 FR 74504).

Quota Transfers

Under the implementing regulations at 50 CFR 635.27(a)(8), NMFS has the authority to transfer quotas among categories, or, as appropriate, subcategories, of the fishery, after considering the following factors: (1) The usefulness of information obtained from catches in the particular category for biological sampling and monitoring of the status of the stock; (2) the catches of the particular category quota to date and the likelihood of closure of that segment of the fishery if no allocation is made; (3) the projected ability of the vessels fishing under the particular category quota to harvest the additional amount of BFT before the end of the fishing year; (4) the estimated amounts by which quotas established for other gear segments of the fishery might be exceeded; (5) the effects of the transfer on BFT rebuilding and overfishing; and (6) the effects of the transfer on accomplishing the objectives of the HMS FMP.

If it is determined, based on the factors listed here and the probability of exceeding the total quota, that vessels fishing under any category or subcategory quota are not likely to take that quota, NMFS may transfer inseason any portion of the remaining quota of that fishing category to any other fishing category or to the Reserve quota.

General Category End Date

During the development of the HMS FMP, the emergence of a General

category BFT fishery in the southern Atlantic region was extensively discussed by the HMS AP and the public. However, the HMS AP did not reach consensus on how the HMS FMP should address the scope of a southern area General category BFT fishery. Over the last couple of years, NMFS has performed a number of inseason quota transfers of BFT, consistent with the transfer criteria established in the HMS FMP, which has allowed the General category BFT fishery to extend into the winter months (i.e., late November - December) and provided fishing opportunities for southern Atlantic General category fishermen. In 2002, NMFS received a Petition for Rulemaking submitted by the North Carolina Department of Marine Fisheries to formalize this winter fishery and extend fishing opportunities into January. NMFS published a Notice of Receipt of Petition on November 18, 2002 (67 FR 69502).

In part to address some of the concerns raised in the Petition, as well as to increase fishing opportunities and optimum yield for the fishery overall, NMFS recently extended the General category end date from December 31 to January 31 (68 FR 74504, December, 24, 2003). This effectively alters the third General category time-period from October through December to October through January.

Quota Adjustments

The 2003 BFT quota specifications issued pursuant to § 635.27 set a General category quota of 684.4 mt of large medium and giant BFT to be harvested from the regulatory area during the 2003 fishing year, and divided the General category quota into time-period subquotas to provide for broad temporal and geographic distribution of fishing opportunities. On November 18, 2003, NMFS transferred 150 mt to the Reserve category, establishing an adjusted coastwide General category quota of 534.4 mt for the 2003 fishing year (68 FR 64990, November 18, 2003). Based on reported landings, NMFS closed the coastwide General category at 11:30 p.m. local time December 10, 2003. The intent of this closure was to prevent overharvest of the adjusted quota established for the General category. As of the December 10, 2003 closure, approximately 552.8 mt has been harvested by the coastwide General category, an overharvest of approximately 18.4 mt.

After considering the criteria established for making transfers between categories, NMFS has determined that 15 mt of the remaining Longline North subcategory quota of approximately 27.9 mt (not including the 25 mt set aside for BFT caught in the vicinity of the management boundary area) should be transferred to the coastwide General category quota. NMFS has also determined that 12 mt of the remaining Longline South subcategory quota of approximately 74.0 mt and 3 mt of the Trap category quota of approximately 3.8 should be transferred to the coastwide General category. These transfers provide a combined 30 mt to the coastwide General category fishery for an adjusted quota of 564.4 mt. This action addresses the cumulative overharvest of 18.4 mt to date and also provides a limited amount of additional quota (11.6 mt) to extend fishing opportunities in the southern Atlantic region.

Due to the expected General category catch rates late in the season and the amount of quota available, NMFS is limiting the coastwide General category reopening period for large medium and giant BFT to two days. Therefore, the coastwide General category is scheduled to reopen on 12:30 a.m. January 2, 2004, and close at 11:30 p.m. January 3, 2004. Fishing for, retaining, possessing, or landing large medium or giant BFT intended for sale by persons aboard vessels in the General or HMS Charter/Headboat categories must cease at 11:30 p.m. local time January 3, 2004.

Classification

The Assistant Administrator for fisheries, NOAA (AA), finds good cause that providing prior notice and public comment for this action, as required under 5 U.S.C. 553 (b) (B), is impracticable and contrary to the public interest. This transfer and reopening is intended to provide increased fishing opportunities in all areas without risking overharvest of the adjusted BFT quota established for the coastwide General category. The fishery is currently closed and any delay in reopening would not allow for maximum utilization of available quota and would be inconsistent with domestic requirements and objectives. NMFS provides prior notification of the reopening, and subsequent closure, by publishing a notice in the **Federal Register**, faxing notification to individuals on the HMS FAX Network and to known fishery representatives, announcing the notice on the Atlantic Tunas Information Line, and announcing the notice over NOAA Weather and Coast Guard radio channels. For all of the above reasons, and because this action relieves a restriction (i.e., allows the utilization of quota and extends fishing opportunities), there is also good cause under 5 U.S.C. 553(d) to waive the delay in effectiveness of this action. This action is required under 50 CFR 635.28(a) (1) and is exempt from review under E.O. 12866.

Authority: 16 U.S.C. 971 *et seq.* and 1801 *et seq.*

Dated: December 24, 2003.

Bruce C. Morehead,

Acting Director, Office of Sustainable Fisheries, National Marine Fisheries Service.

[FR Doc. 03–32223 Filed 12–24–03; 2:10 pm]

BILLING CODE 3510–22–S

Proposed Rules

Federal Register
Vol. 68, No. 250
Wednesday, December 31, 2003

This section of the FEDERAL REGISTER contains notices to the public of the proposed issuance of rules and regulations. The purpose of these notices is to give interested persons an opportunity to participate in the rule making prior to the adoption of the final rules.

DEPARTMENT OF TRANSPORTATION

Federal Aviation Administration

14 CFR Part 39

[Docket No. 2003–NM–85–AD]

RIN 2120–AA64

Airworthiness Directives; Empresa Brasileira de Aeronautica S.A. (EMBRAER) Model EMB–135 and EMB–145 Series Airplanes

AGENCY: Federal Aviation Administration, DOT.

ACTION: Notice of proposed rulemaking (NPRM).

SUMMARY: This document proposes the adoption of a new airworthiness directive (AD) that is applicable to certain EMBRAER Model EMB–135 and EMB–145 series airplanes. This proposal would require inspection of the housings of the main landing gear (MLG) leg strut bushings; repair of the housings if necessary; and replacement of the MLG leg strut bushings with new bushings. These actions are necessary to prevent corrosion of the housings of the MLG leg strut bushings and consequent failure of the MLG. This action is intended to address the identified unsafe condition.

DATES: Comments must be received by January 30, 2004.

ADDRESSES: Submit comments in triplicate to the Federal Aviation Administration (FAA), Transport Airplane Directorate, ANM–114, Attention: Rules Docket No. 2003–NM–85–AD, 1601 Lind Avenue, SW., Renton, Washington 98055–4056. Comments may be inspected at this location between 9 a.m. and 3 p.m., Monday through Friday, except Federal holidays. Comments may be submitted via fax to (425) 227–1232. Comments may also be sent via the Internet using the following address: *9-anm-nprmcomment@faa.gov.* Comments sent via fax or the Internet must contain ''Docket No. 2003–NM–85–AD'' in the subject line and need not be submitted in triplicate. Comments sent via the Internet as attached electronic files must be formatted in Microsoft Word 97 for Windows or ASCII text.

The service information referenced in the proposed rule may be obtained from Empresa Brasileira de Aeronautica S.A. (EMBRAER), P.O. Box 343—CEP 12.225, Sao Jose dos Campos—SP, Brazil. This information may be examined at the FAA, Transport Airplane Directorate, 1601 Lind Avenue, SW., Renton, Washington.

FOR FURTHER INFORMATION CONTACT: Dan Rodina, Aerospace Engineer; International Branch, ANM–116, FAA, Transport Airplane Directorate, 1601 Lind Avenue, SW., Renton, Washington 98055–4056; telephone (425) 227–2125; fax (425) 227–1149.

SUPPLEMENTARY INFORMATION:

Comments Invited

Interested persons are invited to participate in the making of the proposed rule by submitting such written data, views, or arguments as they may desire. Communications shall identify the Rules Docket number and be submitted in triplicate to the address specified above. All communications received on or before the closing date for comments, specified above, will be considered before taking action on the proposed rule. The proposals contained in this action may be changed in light of the comments received.

Submit comments using the following format:

- Organize comments issue-by-issue. For example, discuss a request to change the compliance time and a request to change the service bulletin reference as two separate issues.
- For each issue, state what specific change to the proposed AD is being requested.
- Include justification (*e.g.*, reasons or data) for each request.

Comments are specifically invited on the overall regulatory, economic, environmental, and energy aspects of the proposed rule. All comments submitted will be available, both before and after the closing date for comments, in the Rules Docket for examination by interested persons. A report summarizing each FAA-public contact concerned with the substance of this proposal will be filed in the Rules Docket.

Commenters wishing the FAA to acknowledge receipt of their comments submitted in response to this action must submit a self-addressed, stamped postcard on which the following statement is made: ''Comments to Docket Number 2003–NM–85–AD.'' The postcard will be date stamped and returned to the commenter.

Availability of NPRMs

Any person may obtain a copy of this NPRM by submitting a request to the FAA, Transport Airplane Directorate, ANM–114, Attention: Rules Docket No. 2003–NM–85–AD, 1601 Lind Avenue, SW., Renton, Washington 98055–4056.

Discussion

The Departamento de Aviacao Civil (DAC), which is the airworthiness authority for Brazil, notified the FAA that an unsafe condition may exist on certain EMBRAER Model EMB–135 and –145 series airplanes. The DAC advises that, during a sampling program inspection, corrosion was discovered on the housings of certain main landing gear (MLG) leg strut bushings due to water accumulation in the holes of those bushings. This condition, if not corrected, could result in failure of the MLG.

Explanation of Relevant Service Information

EMBRAER has issued Service Bulletin 145–32–0066, Change 01, dated August 15, 2002, which describes procedures for a detailed inspection of the housings of the main landing gear (MLG) leg strut bushings; repair of the housings if necessary; and replacement of the MLG leg strut bushings with new bushings without holes. Accomplishment of the actions specified in the service bulletin is intended to adequately address the identified unsafe condition. The DAC classified this service bulletin as mandatory and issued Brazilian airworthiness directive 2002–12–01, effective January 6, 2003, in order to assure the continued airworthiness of these airplanes in Brazil.

FAA's Conclusions

These airplane models are manufactured in Brazil and are type certificated for operation in the United States under the provisions of section 21.29 of the Federal Aviation Regulations (14 CFR 21.29) and the applicable bilateral airworthiness

agreement. Pursuant to this bilateral airworthiness agreement, the DAC has kept the FAA informed of the situation described above. The FAA has examined the findings of the DAC, reviewed all available information, and determined that AD action is necessary for products of this type design that are certificated for operation in the United States.

Explanation of Requirements of Proposed Rule

Since an unsafe condition has been identified that is likely to exist or develop on other airplanes of the same type design registered in the United States, the proposed AD would require accomplishment of the actions specified in the service bulletin described previously.

Cost Impact

The FAA estimates that 75 airplanes of U.S. registry would be affected by this proposed AD.

It would take approximately 7 work hour per airplane to accomplish the proposed inspection of the bushing housings for corrosion, at an average labor rate of $65 per work hour. Based on these figures, the cost impact of the proposed inspection on U.S. operators is estimated to be $34,125, or $455 per airplane.

It would take approximately 7 work hours per airplane to accomplish the proposed replacement of the bushings, at an average labor rate of $65 per work hour. Required parts would cost approximately $250 per airplane. Based on these figures, the cost impact of the proposed replacement of bushings on U.S. operators is estimated to be $52,875, or $705 per airplane.

The cost impact figures discussed above are based on assumptions that no operator has accomplished any of the proposed requirements of this AD action, and that no operators would accomplish those actions in the future if this proposed AD were not adopted. The cost impact figures discussed in AD rulemaking actions represent only the time necessary to perform the specific actions actually required by the AD. These figures typically do not include incidental costs, such as the time required to gain access and close up, planning time, or time necessitated by other administrative actions.

Regulatory Impact

The regulations proposed herein would not have a substantial direct effect on the States, on the relationship between the national Government and the States, or on the distribution of power and responsibilities among the various levels of government. Therefore, it is determined that this proposal would not have federalism implications under Executive Order 13132.

For the reasons discussed above, I certify that this proposed regulation (1) is not a ''significant regulatory action'' under Executive Order 12866; (2) is not a ''significant rule'' under the DOT Regulatory Policies and Procedures (44 FR 11034, February 26, 1979); and (3) if promulgated, will not have a significant economic impact, positive or negative, on a substantial number of small entities under the criteria of the Regulatory Flexibility Act. A copy of the draft regulatory evaluation prepared for this action is contained in the Rules Docket. A copy of it may be obtained by contacting the Rules Docket at the location provided under the caption **ADDRESSES.**

List of Subjects in 14 CFR Part 39

Air transportation, Aircraft, Aviation safety, Safety.

The Proposed Amendment

Accordingly, pursuant to the authority delegated to me by the Administrator, the Federal Aviation Administration proposes to amend part 39 of the Federal Aviation Regulations (14 CFR part 39) as follows:

PART 39—AIRWORTHINESS DIRECTIVES

1. The authority citation for part 39 continues to read as follows:

Authority: 49 U.S.C. 106(g), 40113, 44701.

§ 39.13 [Amended]

2. Section 39.13 is amended by adding the following new airworthiness directive:

Empresa Brasileira de Aeronautica S.A. (EMBRAER): Docket 2003–NM–85–AD.

Applicability: Model EMB–135 and –145 series airplanes, certificated in any category, equipped with main landing gear (MLG) leg strut, part number (P/N) 2309–3002–501 through 2309–3002–508 inclusive, and 2309–2002–501 through 2309–2002–510 inclusive.

Compliance: Required as indicated, unless accomplished previously.

To prevent corrosion of the housings of the main landing gear (MLG) leg strut bushings and consequent failure of the MLG, accomplish the following:

Inspection and Repair of Housings

(a) Within 5,500 flight hours after the effective date of this AD, perform a detailed inspection of the housings of the MLG leg strut bushings for corrosion per the Accomplishment Instructions of EMBRAER Service Bulletin 145–32–0066, Change 01, dated August 15, 2002. If any corrosion is found, prior to further flight, repair the housings in accordance with the Accomplishment Instructions of the service bulletin.

Note 1: For the purposes of this AD, a detailed inspection is defined as: ''An intensive visual examination of a specific structural area, system, installation, or assembly to detect damage, failure, or irregularity. Available lighting is normally supplemented with a direct source of good lighting at intensity deemed appropriate by the inspector. Inspection aids such as mirror, magnifying lenses, etc., may be used. Surface cleaning and elaborate access procedures may be required.''

Replacement of Bushings

(b) Within 5,500 flight hours after the effective date of this AD, replace the MLG leg strut bushing, P/N 2309–2022–001, with a new bushing without holes, in accordance with the Accomplishment Instructions of EMBRAER Service Bulletin 145–32–0066, Change 01, dated August 15, 2002.

Alternative Methods of Compliance

(c) In accordance with 14 CFR 39.19, the Manager, International Branch, ANM–116, FAA, is authorized to approve alternative methods of compliance for this AD.

Note 2: The subject of this AD is addressed in Brazilian airworthiness directive 2002–12–01, effective January 6, 2003.

Issued in Renton, Washington, on December 19, 2003.

Ali Bahrami,

Acting Manager, Transport Airplane Directorate, Aircraft Certification Service.

[FR Doc. 03–32135 Filed 12–30–03; 8:45 am]

BILLING CODE 4910–13–P

DEPARTMENT OF TRANSPORTATION

Federal Aviation Administration

14 CFR Part 39

[Docket No. 2002–NM–101–AD]

RIN 2120–AA64

Airworthiness Directives; Boeing Model 737–600, –700, 700C, –800, and –900 Series Airplanes

AGENCY: Federal Aviation Administration, DOT.

ACTION: Notice of proposed rulemaking (NPRM).

SUMMARY: This document proposes the adoption of a new airworthiness directive (AD) that is applicable to certain Boeing Model 737–600, –700, 700C, –800, and –900 series airplanes. This proposal would require replacement of the proximity switch electronics unit with a new, improved unit. This action is necessary to prevent a malfunction of the aural warning for the landing gear, leading the crew to open the circuit breaker for the aural warning horn which stops the operation

of other aural warnings of malfunctions in other systems and, thus, could jeopardize a safe flight and landing. This action is intended to address the identified unsafe condition.

DATES: Comments must be received by February 17, 2004.

ADDRESSES: Submit comments in triplicate to the Federal Aviation Administration (FAA), Transport Airplane Directorate, ANM–114, Attention: Rules Docket No. 2002–NM–101–AD, 1601 Lind Avenue, SW., Renton, Washington 98055–4056. Comments may be inspected at this location between 9 a.m. and 3 p.m., Monday through Friday, except Federal holidays. Comments may be submitted via fax to (425) 227–1232. Comments may also be sent via the Internet using the following address: *9-anm-nprmcomment@faa.gov*. Comments sent via fax or the Internet must contain ''Docket No. 2002–NM–101–AD'' in the subject line and need not be submitted in triplicate. Comments sent via the Internet as attached electronic files must be formatted in Microsoft Word 97 or 2000 or ASCII text.

The service information referenced in the proposed rule may be obtained from Boeing Commercial Airplane Group, P.O. Box 3707, Seattle, Washington 98124–2207. This information may be examined at the FAA, Transport Airplane Directorate, 1601 Lind Avenue SW., Renton, Washington.

FOR FURTHER INFORMATION CONTACT: Binh V. Tran, Aerospace Engineer, Systems and Equipment Branch, ANM–130S, FAA, Seattle Aircraft Certification Office, 1601 Lind Avenue, SW., Renton, Washington 98055–4056; telephone (425) 917–6485; fax (425) 917–6590.

SUPPLEMENTARY INFORMATION:

Comments Invited

Interested persons are invited to participate in the making of the proposed rule by submitting such written data, views, or arguments as they may desire. Communications shall identify the Rules Docket number and be submitted in triplicate to the address specified above. All communications received on or before the closing date for comments, specified above, will be considered before taking action on the proposed rule. The proposals contained in this action may be changed in light of the comments received.

Submit comments using the following format:

- Organize comments issue-by-issue. For example, discuss a request to change the compliance time and a request to change the service bulletin reference as two separate issues.
- For each issue, state what specific change to the proposed AD is being requested.
- Include justification (*e.g.*, reasons or data) for each request.

Comments are specifically invited on the overall regulatory, economic, environmental, and energy aspects of the proposed rule. All comments submitted will be available, both before and after the closing date for comments, in the Rules Docket for examination by interested persons. A report summarizing each FAA-public contact concerned with the substance of this proposal will be filed in the Rules Docket.

Commenters wishing the FAA to acknowledge receipt of their comments submitted in response to this action must submit a self-addressed, stamped postcard on which the following statement is made: ''Comments to Docket Number 2002–NM–101–AD.'' The postcard will be date stamped and returned to the commenter.

Availability of NPRMs

Any person may obtain a copy of this NPRM by submitting a request to the FAA, Transport Airplane Directorate, ANM–114, Attention: Rules Docket No. 2002–NM–101–AD, 1601 Lind Avenue, SW., Renton, Washington 98055–4056.

Discussion

The FAA has received reports from at least seven operators of Boeing Model 737 airplanes of a malfunction of the aural warning horn for the landing gear. The aural warning operated during climb or cruise, after retraction of the landing gear and flaps. The malfunction can cause the flight crew's focus to change from operation of the airplane to identification of the cause of the malfunction. Malfunction of the aural warning for the landing gear, if not corrected, could lead the crew to open the circuit breaker for the aural warning horn which stops the operation of other aural warnings of malfunctions in other systems and, thus, could jeopardize a safe flight and landing.

Explanation of Relevant Service Information

The FAA has reviewed and approved Boeing Alert Service Bulletin 737–32A1343, dated July 26, 2001, which describes procedures for replacement of the proximity switch electronics unit (PSEU) with a new unit which will help prevent a malfunction of the aural warning horn for the landing gear. The Alert Service Bulletin indicates that Boeing Component Service Bulletins 285A1600–32–01 and 285A1600–32–02 are to be accomplished concurrently. Accomplishment of the actions specified in the Alert Service Bulletin is intended to adequately address the identified unsafe condition.

Explanation of Requirements of Proposed Rule

Since an unsafe condition has been identified that is likely to exist or develop on other products of this same type design, the proposed AD would require accomplishment of the actions specified in the service bulletin described previously. The actions would be required to be accomplished in accordance with the service bulletin described previously, except as discussed below.

Differences

Although the service bulletin recommends accomplishing the replacement ''as soon as manpower and material are available,'' the FAA has determined that such an imprecise compliance time would not address the identified unsafe condition in a timely manner. In developing an appropriate compliance time for this AD, the FAA considered not only the manufacturer's recommendation, but the degree of urgency associated with addressing the subject unsafe condition, the average utilization of the affected fleet, and the time necessary to perform the modifications. In light of all of these factors, the FAA finds a compliance time of 18 months for completing the required actions to be warranted, in that it represents an appropriate interval of time for affected airplanes to continue to operate without compromising safety.

The FAA is not proposing in this NPRM that Boeing Component Service Bulletins 285A1600–32–01 and 285A1600–32–02 be accomplished concurrently with Boeing Alert Service Bulletin 737–32A1343, dated July 26, 2001.

Cost Impact

There are approximately 890 airplanes of the affected design in the worldwide fleet. The FAA estimates that 283 airplanes of U.S. registry would be affected by this proposed AD, that it would take approximately 4 work hours per airplane to accomplish the proposed actions, and that the average labor rate is $65 per work hour. Required parts would cost approximately $40 per airplane. Based on these figures, the cost impact of the proposed AD on U.S. operators is estimated to be $84,900, or $300 per airplane.

The cost impact figure discussed above is based on assumptions that no operator has yet accomplished any of the proposed requirements of this AD

action, and that no operator would accomplish those actions in the future if this proposed AD were not adopted. The cost impact figures discussed in AD rulemaking actions represent only the time necessary to perform the specific actions actually required by the AD. These figures typically do not include incidental costs, such as the time required to gain access and close up, planning time, or time necessitated by other administrative actions.

The manufacturer may cover the cost of replacement parts associated with this proposed AD, subject to warranty conditions. Manufacturer warranty remedies may also be available for labor costs associated with this proposed AD. As a result, the costs attributable to the proposed AD may be less than stated above.

Regulatory Impact

The regulations proposed herein would not have a substantial direct effect on the States, on the relationship between the national Government and the States, or on the distribution of power and responsibilities among the various levels of government. Therefore, it is determined that this proposal would not have federalism implications under Executive Order 13132.

For the reasons discussed above, I certify that this proposed regulation (1) is not a ''significant regulatory action'' under Executive Order 12866; (2) is not a ''significant rule'' under the DOT Regulatory Policies and Procedures (44 FR 11034, February 26, 1979); and (3) if promulgated, will not have a significant economic impact, positive or negative, on a substantial number of small entities under the criteria of the Regulatory Flexibility Act. A copy of the draft regulatory evaluation prepared for this action is contained in the Rules Docket. A copy of it may be obtained by contacting the Rules Docket at the location provided under the caption **ADDRESSES.**

List of Subjects in 14 CFR Part 39

Air transportation, Aircraft, Aviation safety, Safety.

The Proposed Amendment

Accordingly, pursuant to the authority delegated to me by the Administrator, the Federal Aviation Administration proposes to amend part 39 of the Federal Aviation Regulations (14 CFR part 39) as follows:

PART 39—AIRWORTHINESS DIRECTIVES

1. The authority citation for part 39 continues to read as follows:

Authority: 49 U.S.C. 106(g), 40113, 44701.

§ 39.13 [Amended]

2. Section 39.13 is amended by adding the following new airworthiness directive:

Boeing: Docket 2002–NM–101AD.

Applicability: Model 737–600, –700, 700C, –800, and ''900 series airplanes, as listed in Boeing Alert Service Bulletin 737–32A1343, dated July 26, 2001; certificated in any category.

Compliance: Required as indicated, unless accomplished previously.

To prevent a malfunction of the aural warning for the landing gear, leading the crew to open the circuit breaker for the aural warning horn which stops the operation of other aural warnings of malfunctions in other systems and, thus, could jeopardize a safe flight and landing, accomplish the following:

Replacement

(a) Within 18 months after the effective date of this AD: Remove the Proximity Switch Electronics Unit (PSEU) having part number 285A1600–2 or 285A1600–3 and replace it with a PSEU having part number 285A1600–4, per the Accomplishment Instructions of Boeing Alert Service Bulletin 737–32A1343, dated July 26, 2001.

Parts Installation

(b) As of the effective date of this AD, no person shall install a PSEU having part number 285A1600–2 or 285A1600–3 on any airplane.

Alternative Methods of Compliance

(c) In accordance with 14 CFR 39.19, the Manager, Seattle Aircraft Certification Office, FAA, is authorized to approve alternative methods of compliance for this AD.

Issued in Renton, Washington, on December 19, 2003.

Ali Bahrami,

Acting Manager, Transport Airplane Directorate, Aircraft Certification Service.

[FR Doc. 03–32134 Filed 12–30–03; 8:45 am]

BILLING CODE 4910–13–P

DEPARTMENT OF TRANSPORTATION

Federal Aviation Administration

14 CFR Part 39

[Docket No. 2002–NM–338–AD]

RIN 2120–AA64

Airworthiness Directives; Bombardier Model DHC–8–102, –103, –106, –201, –202, –301, –311, and –315 Airplanes

AGENCY: Federal Aviation Administration, DOT.

ACTION: Notice of proposed rulemaking (NPRM).

SUMMARY: This document proposes the adoption of a new airworthiness directive (AD) that is applicable to certain Bombardier Model DHC–8–102, –103, –106, –201, –202, –301, –311, and –315 airplanes. This proposal would require inspection of the fitting assemblies located on the vent and scavenge lines routed immediately below the fuel tank access covers on both wings for proper installation, and corrective actions if necessary. This proposal also would require inspection of the stiffeners on the underside of fuel tank access covers on both wings for signs of chafing damage caused by incorrect orientation of the lockwire tail, and removal of damage. This action is necessary to prevent contact between the lockwire pigtail of the fitting and the stiffener located on the inside surface of the fuel access covers of the wings, which could serve as a potential ignition source within the fuel tank if a cover is struck by lightning and result in possible fuel tank explosion. This action is intended to address the identified unsafe condition.

DATES: Comments must be received by January 30, 2004.

ADDRESSES: Submit comments in triplicate to the Federal Aviation Administration (FAA), Transport Airplane Directorate, ANM–114, Attention: Rules Docket No. 2002–NM–338–AD, 1601 Lind Avenue, SW., Renton, Washington 98055–4056. Comments may be inspected at this location between 9:00 a.m. and 3:00 p.m., Monday through Friday, except Federal holidays. Comments may be submitted via fax to (425) 227–1232. Comments may also be sent via the Internet using the following address: *9-anm-nprmcomment@faa.gov*. Comments sent via fax or the Internet must contain ''Docket No. 2002–NM–338–AD'' in the subject line and need not be submitted in triplicate. Comments sent via the Internet as attached electronic files must be formatted in Microsoft Word 97 for Windows or ASCII text.

The service information referenced in the proposed rule may be obtained from Bombardier, Inc., Bombardier Regional Aircraft Division, 123 Garratt Boulevard, Downsview, Ontario M3K 1Y5, Canada. This information may be examined at the FAA, Transport Airplane Directorate, 1601 Lind Avenue, SW., Renton, Washington; or at the FAA, New York Aircraft Certification Office, 1600 Stewart Avenue, Westbury, New York.

FOR FURTHER INFORMATION CONTACT: Sarbhpreet Singh Sawhney, Aerospace Engineer, Airframe and Propulsion Branch, ANE–171, FAA, New York Aircraft Certification Office, 1600 Stewart Avenue, Westbury, New York

11590; telephone (516) 228–7340; fax (516) 794–5531

SUPPLEMENTARY INFORMATION:

Comments Invited

Interested persons are invited to participate in the making of the proposed rule by submitting such written data, views, or arguments as they may desire. Communications shall identify the Rules Docket number and be submitted in triplicate to the address specified above. All communications received on or before the closing date for comments, specified above, will be considered before taking action on the proposed rule. The proposals contained in this action may be changed in light of the comments received.

Submit comments using the following format:

- Organize comments issue-by-issue. For example, discuss a request to change the compliance time and a request to change the service bulletin reference as two separate issues.
- For each issue, state what specific change to the proposed AD is being requested.
- Include justification (*e.g.*, reasons or data) for each request.

Comments are specifically invited on the overall regulatory, economic, environmental, and energy aspects of the proposed rule. All comments submitted will be available, both before and after the closing date for comments, in the Rules Docket for examination by interested persons. A report summarizing each FAA-public contact concerned with the substance of this proposal will be filed in the Rules Docket.

Commenters wishing the FAA to acknowledge receipt of their comments submitted in response to this action must submit a self-addressed, stamped postcard on which the following statement is made: ''Comments to Docket Number 2002–NM–338–AD.'' The postcard will be date stamped and returned to the commenter.

Availability of NPRMs

Any person may obtain a copy of this NPRM by submitting a request to the FAA, Transport Airplane Directorate, ANM–114, Attention: Rules Docket No. 2002–NM–338–AD, 1601 Lind Avenue, SW., Renton, Washington 98055–4056.

Discussion

Transport Canada Civil Aviation (TCCA), which is the airworthiness authority for Canada, notified the FAA that an unsafe condition may exist on certain Bombardier Model DHC–8–102, –103, –106, –201, –202, –301, –311, and –315 airplanes. TCCA advises that it has received a report of a contact condition between the lockwire pigtail of a particular fitting and the stiffener located on the inside surface of a wing fuel access cover. Investigation revealed that these particular fittings were installed facing the outboard side of the wing, rather than the inboard side. This condition, if not corrected, could result in contact between the lockwire pigtail of the fitting and the stiffener located on the inside surface of the fuel access covers of the wings. Such contact could serve as a potential ignition source within the fuel tank if a cover is struck by lightning, which could result in possible fuel tank explosion.

Explanation of Relevant Service Information

Bombardier has issued Alert Service Bulletin A8–28–33, Revision ''A,'' dated October 10, 2002, which describes the following procedures:

- A general visual inspection to verify proper installation of the fitting assemblies and lockwire located on the vent and scavenge lines routed immediately below the fuel tank access covers on both wings, and corrective actions if necessary. These corrective actions include changing the orientation of the fitting assembly; performing a general visual inspection of the O-ring for damage; replacing any damaged O-ring with a new O-ring; and replacing the lockwire with a new lockwire if necessary.
- A general visual inspection of the stiffeners on the underside of fuel tank access covers on both wings for signs of chafing damage caused by incorrect orientation of the lockwire tail, and removal of damage.

Accomplishment of the actions specified in the service bulletin is intended to adequately address the identified unsafe condition. TCCA classified this service bulletin as mandatory and issued Canadian airworthiness directive CF–2002–44, dated October 22, 2002, in order to assure the continued airworthiness of these airplanes in Canada.

FAA's Conclusions

This airplane model is manufactured in Canada and is type certificated for operation in the United States under the provisions of section 21.29 of the Federal Aviation Regulations (14 CFR 21.29) and the applicable bilateral airworthiness agreement. Pursuant to this bilateral airworthiness agreement, TCCA has kept the FAA informed of the situation described above. The FAA has examined the findings of TCCA, reviewed all available information, and determined that AD action is necessary for products of this type design that are certificated for operation in the United States.

Explanation of Requirements of Proposed Rule

Since an unsafe condition has been identified that is likely to exist or develop on other airplanes of the same type design registered in the United States, the proposed AD would require accomplishment of the actions specified in the service bulletin described previously, except as discussed below.

Difference Between Proposed Rule and Referenced Service Bulletin/Canadian Airworthiness Directive

Although the service bulletin specifies that operators may contact the manufacturer for disposition of certain damage conditions, this proposal would require operators to remove the damage per a method approved by either the FAA or the TCCA (or its delegated agent). In light of the type of removal that would be required to address the unsafe condition, and consistent with existing bilateral airworthiness agreements, we have determined that, for this proposed AD, removal of damage approved by either the FAA or TCAA would be acceptable for compliance with this proposed AD.

Operators should note that, although the Canadian airworthiness directive and the Accomplishment Instructions of the referenced service bulletin describe procedures for reporting inspection findings to the airplane manufacturer, this proposed AD would not require those actions. The FAA does not need this information from operators.

Cost Impact

The FAA estimates that 172 airplanes of U.S. registry would be affected by this proposed AD, that it would take approximately 1 work hour per airplane to accomplish the proposed inspections, and that the average labor rate is $65 per work hour. Based on these figures, the cost impact of the proposed AD on U.S. operators is estimated to be $11,180, or $65 per airplane.

The cost impact figure discussed above is based on assumptions that no operator has yet accomplished any of the proposed requirements of this AD action, and that no operator would accomplish those actions in the future if this proposed AD were not adopted. The cost impact figures discussed in AD rulemaking actions represent only the time necessary to perform the specific actions actually required by the AD. These figures typically do not include incidental costs, such as the time required to gain access and close up,

planning time, or time necessitated by other administrative actions.

Regulatory Impact

The regulations proposed herein would not have a substantial direct effect on the States, on the relationship between the national Government and the States, or on the distribution of power and responsibilities among the various levels of government. Therefore, it is determined that this proposal would not have federalism implications under Executive Order 13132.

For the reasons discussed above, I certify that this proposed regulation (1) is not a ''significant regulatory action'' under Executive Order 12866; (2) is not a ''significant rule'' under the DOT Regulatory Policies and Procedures (44 FR 11034, February 26, 1979); and (3) if promulgated, will not have a significant economic impact, positive or negative, on a substantial number of small entities under the criteria of the Regulatory Flexibility Act. A copy of the draft regulatory evaluation prepared for this action is contained in the Rules Docket. A copy of it may be obtained by contacting the Rules Docket at the location provided under the caption **ADDRESSES.**

List of Subjects in 14 CFR Part 39

Air transportation, Aircraft, Aviation safety, Safety.

The Proposed Amendment

Accordingly, pursuant to the authority delegated to me by the Administrator, the Federal Aviation Administration proposes to amend part 39 of the Federal Aviation Regulations (14 CFR part 39) as follows:

PART 39—AIRWORTHINESS DIRECTIVES

1. The authority citation for part 39 continues to read as follows:

Authority: 49 U.S.C. 106(g), 40113, 44701.

§ 39.13 [Amended]

2. Section 39.13 is amended by adding the following new airworthiness directive:

Bombardier, Inc. (Formerly de Havilland, Inc.): Docket 2002–NM–338–AD.

Applicability: Model DHC–8–102, –103, –106, –201, –202, –301, –311, and –315 airplanes, serial numbers 003 through 586 inclusive; certificated in any category.

Compliance: Required as indicated, unless accomplished previously.

To prevent contact between the lockwire pigtail of the fitting and the stiffener located on the inside surface of the fuel access covers of the wings, which could serve as a potential ignition source within the fuel tank if a cover is struck by lightning and result in possible fuel tank explosion, accomplish the following:

Inspection of Fitting Assemblies and Lockwire

(a) Within 12 months after the effective date of this AD, do a general visual inspection to verify proper installation of the fitting assemblies and the lockwire located on the vent and scavenge lines routed immediately below the fuel tank access covers on both wings by accomplishing all the actions specified in Part A of the Accomplishment Instructions of Bombardier Alert Service Bulletin A8–28–33, Revision ''A,'' dated October 10, 2002. Do the actions per the service bulletin.

Note 1: For the purposes of this AD, a general visual inspection is defined as: ''A visual examination of an interior or exterior area, installation, or assembly to detect obvious damage, failure, or irregularity. This level of inspection is made from within touching distance unless otherwise specified. A mirror may be necessary to enhance visual access to all exposed surfaces in the inspection area. This level of inspection is made under normally available lighting conditions such as daylight, hangar lighting, flashlight, or droplight and may require removal or opening of access panels or doors. Stands, ladders, or platforms may be required to gain proximity to the area being checked.''

Corrective Actions for Any Improperly Installed Fitting Assembly or Lockwire

(b) If any fitting assembly is found to be improperly installed during the general visual inspection required by paragraph (a) of this AD, before further flight, do the actions specified in paragraphs (b)(1) and (b)(2) of this AD per Part A of the Accomplishment Instructions of Bombardier Alert Service Bulletin A8–28–33, Revision ''A,'' dated October 10, 2002.

(1) Change the orientation of the fitting assembly.

(2) Perform a general visual inspection of the O-ring for damage, and replace any damaged O-ring with a new O-ring.

(c) If any lockwire is found to be improperly installed during the general visual inspection required by paragraph (a) of this AD, before further flight, replace the lockwire with a new lockwire, per Part A of the Accomplishment Instructions of Bombardier Alert Service Bulletin A8–28–33, Revision ''A,'' dated October 10, 2002.

Inspection of the Stiffeners

(d) Within 12 months after the effective date of this AD, do a general visual inspection of the stiffeners on the underside of fuel tank access covers on both wings for signs of chafing damage caused by incorrect orientation of the lockwire tail, per Part B of the Accomplishment Instructions of Bombardier Alert Service Bulletin A8–28–33, Revision ''A,'' dated October 10, 2002.

Corrective Action for Chafing Damage

(e) If any chafing damage is found during the general visual inspection required by paragraph (d) of this AD, before further flight, remove the damage per Part B of the Accomplishment Instructions of Bombardier Alert Service Bulletin A8–28–33, Revision ''A,'' dated October 10, 2002, except where the service bulletin recommends contacting Bombardier for damage in excess of the given limits, before further flight, repair per a method approved by either the Manager, New York Aircraft Certification Office (ACO), FAA; or the Transport Canada Civil Aviation (TCCA) (or its delegated agent).

Exception to Service Bulletin Reporting

(f) Although the service bulletin referenced in this AD specifies to report inspection findings to the airplane manufacturer, this AD does not include such a requirement.

Alternative Methods of Compliance

(g) In accordance with 14 CFR 39.19, the Manager, New York Aircraft Certification Office (ACO), FAA, is authorized to approve alternative methods of compliance for this AD.

Note 2: The subject of this AD is addressed in Canadian airworthiness directive CF–2002–44, dated October 22, 2002.

Issued in Renton, Washington, on December 19, 2003.

Ali Bahrami,

Acting Manager, Transport Airplane Directorate, Aircraft Certification Service.

[FR Doc. 03–32133 Filed 12–30–03; 8:45 am]

BILLING CODE 4910–13–P

DEPARTMENT OF TRANSPORTATION

Federal Aviation Administration

14 CFR Part 71

[Docket No. FAA–2003–16437; Airspace Docket No. 03–AWP–02]

RIN 2120–AA66

Proposed Revision of VOR Federal Airway 137

AGENCY: Federal Aviation Administration (FAA) DOT.

ACTION: Notice of proposed rulemaking.

SUMMARY: This action proposes to revise VOR Federal Airway 137 (V–137) between the Thermal, CA, Very High Frequency Omnidirectional Radio Range and Tactical Air Navigation Aids (VORTAC) intersection and the Imperial, CA, VORTAC. The current route segment between the Thermal, CA, VORTAC, and the Imperial, CA, VORTAC is aligned to avoid a restricted area that no longer exists. The FAA is proposing this action to realign V–137 to form a direct route between the Thermal, CA, VORTAC, and the Imperial, CA, VORTAC. This action would improve the management of air traffic operations and reduce the route mileage between the Thermal, CA, VORTAC and the Imperial, CA, VORTAC.

DATES: Comments must be received on or before February 17, 2004.

ADDRESSES: Send comments on this proposal to the Docket Management System, U.S. Department of Transportation, Room Plaza 401, 400 Seventh Street, SW., Washington, DC 20590–0001. You must identify FAA Docket No. FAA–2003–16437 and Airspace Docket No. 03–AWP–02, at the beginning of your comments. You may also submit comments on the Internet at *http://dms.dot.gov.*

FOR FURTHER INFORMATION CONTACT: Ken McElroy, Airspace and Rules Division, ATA–400, Office of Air Traffic Airspace Management, Federal Aviation Administration, 800 Independence Avenue, SW., Washington, DC 20591; telephone: (202) 267–8783.

SUPPLEMENTARY INFORMATION:

Comments Invited

Interested parties are invited to participate in this proposed rulemaking by submitting such written data, views, or arguments, as they may desire. Comments that provide the factual basis supporting the views and suggestions presented are particularly helpful in developing reasoned regulatory decisions on the proposal. Comments are specifically invited on the overall regulatory, aeronautical, economic, environmental, and energy-related aspects of the proposal.

Communications should identify both docket numbers (FAA Docket No. FAA–2003–16437 and Airspace Docket No. 03–AWP–02) and be submitted in triplicate to the Docket Management System (*see* **ADDRESSES** section for address and phone number). You may also submit comments through the Internet at *http://dms.dot.gov.*

Commenters wishing the FAA to acknowledge receipt of their comments on this notice must submit with those comments a self-addressed, stamped postcard on which the following statement is made: ''Comments to FAA Docket No. FAA–2003–16437 and Airspace Docket No. 03–AWP–02.'' The postcard will be date/time stamped and returned to the commenter.

All communications received on or before the specified closing date for comments will be considered before taking action on the proposed rule. The proposal contained in this notice may be changed in light of comments received. All comments submitted will be available for examination in the public docket both before and after the closing date for comments. A report summarizing each substantive public contact with FAA personnel concerned with this rulemaking will be filed in the docket.

Availability of NPRM's

An electronic copy of this document may be downloaded through the Internet at *http://dms.dot.gov.* Recently published rulemaking documents can also be accessed through the FAA's Web page at *http://www.faa.gov* or the **Federal Register**'s web page at *http://www.gpoaccess.gov/fr/index.html.*

You may review the public docket containing the proposal; any comments received; and any final disposition in person in the Dockets Office (*see* **ADDRESSES** section for address and phone number) between 9 a.m. and 5 p.m., Monday through Friday, except Federal holidays. An informal docket may also be examined during normal business hours at the office of the Regional Air Traffic Division, Federal Aviation Administration, 15000 Aviation Boulevard, Hawthorne, CA 90261.

Persons interested in being placed on a mailing list for future NPRM's should call the FAA's Office of Rulemaking, (202) 267–9677, for a copy of Advisory Circular No. 11–2A, Notice of Proposed Rulemaking Distribution System, which describes the application procedure.

The Proposal

The FAA is proposing an amendment to Title 14 Code of Federal Regulations (14 CFR) part 71 (part 71) to revise V–137 between the Thermal, CA, VORTAC, and the Imperial, CA, VORTAC. The current route segment between the Thermal, CA, VORTAC, and the Imperial, CA, VORTAC, is aligned to avoid a restricted area that no longer exists. The FAA is proposing this action to realign V–137 to form a direct route between the Thermal, CA, VORTAC, and the Imperial, CA, VORTAC. This action would improve the management of air traffic operations and reduce the route mileage between the Thermal, CA, VORTAC, and the Imperial, CA, VORTAC.

Domestic VOR Federal airways are published in paragraph 6010(a), of FAA Order 7400.9L dated September 2, 2003, and effective September 16, 2003, which is incorporated by reference in 14 CFR 71.1. The VOR Federal airway listed in this document would be published subsequently in the order.

The FAA has determined that this proposed regulation only involves an established body of technical regulations for which frequent and routine amendments are necessary to keep them operationally current. Therefore, this proposed regulation: (1) Is not a ''significant regulatory action'' under Executive Order 12866; (2) is not a ''significant rule'' under Department of Transportation (DOT) Regulatory Policies and Procedures (44 FR 11034; February 26, 1979); and (3) does not warrant preparation of a regulatory evaluation as the anticipated impact is so minimal. Since this is a routine matter that will only affect air traffic procedures and air navigation, it is certified that this proposed rule, when promulgated, will not have a significant economic impact on a substantial number of small entities under the criteria of the Regulatory Flexibility Act.

List of Subjects in 14 CFR Part 71

Airspace, Incorporation by reference, Navigation (air).

The Proposed Amendment

In consideration of the foregoing, the Federal Aviation Administration proposes to amend 14 CFR part 71 as follows:

PART 71—DESIGNATION OF CLASS A, B, C, D, AND E AIRSPACE AREAS; AIR TRAFFIC SERVICE ROUTES; AND REPORTING POINTS

1. The authority citation for part 71 continues to read as follows:

Authority: 49 U.S.C. 106(g), 40103, 40113, 40120; E.O. 10854, 24 FR 9565, 3 CFR, 1959–1963 Comp., p. 389.

§ 71.1 [Amended]

2. The incorporation by reference in 14 CFR 71.1 of FAA Order 7400.9L, Airspace Designations and Reporting Points, dated September 2, 2003, and effective September 16, 2003, is amended as follows:

Paragraph 6010(a) Domestic VOR Federal Airways

* * * * *

V–137 [Revised]

From Imperial, CA, INT Imperial 336°M/350°T and Thermal, CA, 131°M/144°T radials; Thermal; Palm Springs, CA; Palmdale, CA; Gorman, CA; Avenal, CA; Priest, CA; Salinas, CA.

* * * * *

Issued in Washington, DC, December 22, 2003.

Reginald C. Matthews,

Manager, Airspace and Rules Division.

[FR Doc. 03–32083 Filed 12–30–03; 8:45 am]

BILLING CODE 4910–13–P

DEPARTMENT OF LABOR

Occupational Safety and Health Administration

29 CFR Part 1910

[Docket No. H–044]

RIN 1218–AA84

Occupational Exposure to 2-Methoxyethanol, 2-Ethoxyethanol and Their Acetates (Glycol Ethers)

AGENCY: Occupational Safety and Health Administration (OSHA), Labor.

ACTION: Withdrawal of proposed rule; termination of rulemaking.

SUMMARY: OSHA is withdrawing its proposed standard on Occupational Exposure to 2-Methoxyethanol (2-ME), 2-Ethoxyethanol (2-EE), and their Acetates (2-MEA, 2-EEA) (four glycol ethers). Production and use of the four glycol ethers either have ceased or are virtually limited to ''closed systems'' where exposure levels more than 10 years ago already were at or below the proposed permissible exposure limits (PELs). Because there are few, if any, remaining opportunities for workplace exposure to these glycol ethers and little or no potential for exposure in the future because of the availability of less-toxic substitutes, OSHA has concluded that the proposed rule is no longer necessary.

DATES: This withdrawal is effective December 31, 2003.

FOR FURTHER INFORMATION CONTACT: OSHA, Mr. George Shaw, Office of Communications, U.S. Department of Labor, Room N–3647, 200 Constitution Avenue, NW., Washington, DC 20210; telephone: (202) 693–1890 (OSHA's TTY number is (877) 889–5627).

For additional copies of this Federal Register notice, contact OSHA, Office of Communications, U.S. Department of Labor, Room N–3101, 200 Constitution Avenue NW., Washington, DC 20210; telephone (202) 693–1888. Electronic copies of this **Federal Register** notice, as well as news releases and other relevant documents, are available at OSHA's Webpage on the Internet at *http://www.OSHA.gov.*

SUPPLEMENTARY INFORMATION:

I. Background

On March 23, 1993, OSHA proposed to reduce the existing PELs for four glycol ethers (2-ME, 2-EE, 2-MEA, 2-EEA) (58 FR 15526). Based on a review of scientific studies and other available evidence, OSHA preliminarily determined that the existing PELs were not adequate to protect an approximately 46,000 exposed workers from significant risks of adverse reproductive and developmental health effects. The Agency held informal public hearings on the proposal, and the record closed in March 1994.

On August 8, 2002, OSHA reopened the rulemaking record to solicit information on the extent to which these glycol ethers are still produced and used in the workplace (67 FR 51524). The Agency also requested information on substitutes for the four glycol ethers that employers may be using, including information on patterns of use, degree of toxicity, and levels of employee exposure to the substitutes. The comment period closed on November 6, 2002. OSHA received only six comments. While this action does not meet any of the criteria for an economically significant or major rule as specified by Executive Order or relevant statutes, it was reviewed by OMB pursuant to Executive Order 12866.

II. Reasons for Withdrawal of the Proposed Standard

Based on evidence of adverse reproductive and developmental health effects associated with exposure to the four glycol ethers (*e.g.,* Exs. 19, 19A, 19B, 24 A–C), some commenters urged OSHA to issue a final standard on glycol ethers (*e.g.,* Exs. 64–2; 64–4; 64–5). However, OSHA has decided to terminate the rulemaking because production, use and exposure to these glycol ethers has ceased or is virtually limited to closed system production where there is little opportunity for employee exposure. Exposure levels in those operations already are at or below the proposed PELs. In addition, use of these glycol ethers has largely been replaced by less-toxic substitutes.

Production and use of the four glycol ethers have declined substantially or ceased completely since the proposed rule was published. Starting in the 1990s employers began moving away from using these glycol ethers due to increasing awareness of their adverse health effects. As early as the mid-1990s, production and use of these glycol ethers had dropped from peak production levels in the late 1980s (Ex. 302–X, pp. 597; 67 FR 51524). The four glycol ethers had been or were being eliminated from critical use areas (*e.g.,* construction paints and coatings, printing inks, military jet fuel) and key industry sectors (*e.g.,* automotive, electronics, semiconductor) (Exs. 11–18; 19B; 28; 29A; 48; 53; 58; 302–X, pp. 596–600). For example, these glycol ethers were no longer used in automotive refinishing, which had accounted for about 86 percent of the affected establishments and 57 percent of all exposed workers. Production of 2-MEA had been phased out completely and the use of 2-ME as a military jet fuel additive, its primary use, was to be phased out before 2000 (Ex. 302–X, pp. 597–98). Thus, by the close of the rulemaking record in 1994, most downstream use had been eliminated (Ex. 58; 302–X, pp. 596–600). Where 2-ME, 2-EE and 2-EEA were still manufactured, their production was virtually limited to ''closed systems'' where, even more than 10 years ago, average exposures (both arithmetic and geometric averages) already were at or below the proposed PELs (Ex. 302–X, pp. 597–98; 58 FR 15582).

More recent data confirm that use of and exposure to these glycol ethers have declined further and are now very limited (Ex. 64–1; 64–1–1. *See also,* SRI, Chemical Economics Handbook (CEH) 663.5000 *et seq.* (September 2000)). By 1999, use of 2-EE had fallen 70 percent, from a peak of 175 million pounds in 1980, and 2-ME use had dropped 96 percent, to just 3 million pounds, according to the Ethylene Glycol Ethers Panel of the American Chemistry Council (ACC), formerly Chemical Manufacturers Association (Ex. 64–1–1; CEH 663.5001A–H). Of the glycol ethers still produced, more than 55 percent was exported and more than 40 percent was used to produce 2-EEA in closed systems, where average exposure levels are at or below the proposed PELs and in most cases less than one-half the proposed PELs (Ex. 64–1–1; 58 FR 15582, Table VIII–2). All other domestic consumption totaled less than 4 percent (5 million pounds). (See Table 1.) Finally, OSHA also notes that the very few comments submitted in response to the record reopening may be further indication of the decline in use and exposure to the four glycol ethers:

TABLE 1.—CONSUMPTION OF ETHYLENE GLYCOL ETHERS, 1999 (MILLIONS OF POUNDS)

	Acetate production	Other U.S. consumption	Exports	Total
2-EE	52	1	0	53
2-EEA	0	1	71	72
2-ME	0	3	0	3
2-MEA	0	0	0	0
Total for all glycol ethers	52 (40.6%)	5 (3.9%)	71 (55.5%)	128 (100%)

Source: Ex. 64–1–1 (citing SRI, Chemical Economics Handbook (September 2000)).

There is now effectively only one producer of these glycol ethers remaining in the United States, Equistar Chemicals (Exs. 64–1; 64–1–1), whose production is virtually limited to closed systems so employees have little opportunity for exposure. According to ACC, Equistar exports the bulk of the glycol ethers it produces (Ex. 64–1). The *Chemical Economics Handbook* confirms this, reporting that the four glycol ethers are no longer sold in the United States (CEH 663.5000R–S). (OSHA notes that Eastman Chemical Company also produces a small amount of 2-EE in a closed system, but only for in-house use as a site-limited intermediate in the production of another product (Ex. 64–1).

Prior to 2001, Dow Chemical Company and Union Carbide, the largest producer of these glycol ethers, produced almost 60 percent of these glycol ethers (CEH 663.5000Q). In 2001, Dow acquired Union Carbide (Exs. 64–1; 64–1–1). Last year, Dow stopped manufacturing these glycol ethers, moving instead to producing less-toxic E-series butyl glycol ethers (*e.g.*, EB) (Exs. 64–1; 64–1–1. CEH 663.5000Q).

III. Substitutes

There is little or no future potential exposure to the four glycol ethers because their use has largely been replaced by less-toxic substitutes. According to ACC, a number of substitutes are available, including other ethylene glycol ethers, propylene glycol ethers and other types of solvents (Ex. 64–1). The *Chemical Economics Handbook* reports that use of the four glycol ethers has been replaced primarily by E-series butyl glycol ethers (EB), P-series glycol ethers, and ethyl-3-ethoxypropionate (EEP). For example, ethylene glycol monobutyl ether acetate, diethylene glycol monobutyl ether acetate, and propylene glycol monomethyl acetate have replaced the use of 2-EEA (CEH 663.5000O). By 1999, the various substitutes accounted for about 80 percent of all glycol ethers consumed domestically (CEH 663.5000E–F). Of these substitutes, EB is now the largest volume glycol ether (64 FR 42127, August 3, 1999), accounting for 44 percent of all glycol ethers consumed domestically (CEH 663.5000E).

Some commenters raised concerns about the potential toxicity of some substitutes, particularly longer chain ethylene glycol ethers, and urged OSHA to promulgate standards addressing these substances (Exs. 64–2, 64–4, 64–5). For example, the California Department of Health Services said the following glycol ethers have been shown to produce adverse reproductive and developmental health effects: ethylene glycol dimethyl ether, ethylene glycol diethyl ether, diethylene glycol dimethyl ether, diethylene glycol diethyl ether, triethylene glycol dimethyl ether, propylene glycol methyl ether-beta, and propylene glycol methyl ether acetate-beta (Ex. 64–5). However, OSHA received little information on the degree to which these substances are used in workplaces and the extent to which employees are currently exposed to them. Therefore, OSHA is not able to determine, based on this rulemaking record, whether those substitutes need to be addressed.

OSHA notes that information submitted to the Environmental Protection Agency indicates that some substitutes do not appear to have the level of toxicity of the four glycol ethers (65 FR 47342, August 2, 2000; 64 FR 42125, August 3, 1999. See also EPA Docket No. A–99–24). Based on such information, EPA is currently considering whether the delist EB from the hazardous air pollutants list established by the Clean Air Act. EB is the most prevalent of the substitutes, accounting for 44 percent of all glycol ether consumed domestically.

In conclusion, given the very limited production, use and exposure to these glycol ethers and the lack of potential future workplace exposure due to the availability and increasing use of less-toxic substitutes, OSHA is withdrawing the proposed standard. Accordingly, OSHA is devoting its resources to rulemaking projects where there is greater potential for employee exposure.

Authority and Signature

This document was prepared under the direction of John L. Henshaw, Assistant Secretary of Labor for Occupational Safety and Health, U.S. Department of Labor. It is issued pursuant to section 6 of the Occupational Safety and Health Act of 1970 (84 Stat. 1594, 29 U.S.C. 655), 29 CFR 1911, and Secretary's Order 5–2002 (67 FR 65008).

Signed at Washington, DC, this 23rd day of December, 2003.

John L. Henshaw,

Assistant Secretary of Labor.

[FR Doc. 03–32018 Filed 12–30–03; 8:45 am]

BILLING CODE 4510–26–M

DEPARTMENT OF THE INTERIOR

Office of Surface Mining Reclamation and Enforcement

30 CFR Part 917

[KY–243–FOR]

Kentucky Regulatory Program

AGENCY: Office of Surface Mining Reclamation and Enforcement (OSM), Interior.

ACTION: Notice of withdrawal of proposed rule.

SUMMARY: We are announcing a decision that House Bill 556, passed by the Kentucky General Assembly on March 15, 2002, designating the ridge top of Pine Mountain as the Pine Mountain Trail State Park, does not meet the criteria to be deemed an amendment to the Kentucky Regulatory Program.

EFFECTIVE DATES: December 31, 2003.

FOR FURTHER INFORMATION CONTACT: William J. Kovacic, Director, Lexington Field Office, Telephone (859) 260–8400, e-mail: *bkovacic@osmre.gov.*

SUPPLEMENTARY INFORMATION:

I. Background on the Kentucky Program
II. Submission of the Proposed Amendment
III. OSM's Findings
IV. Summary and Disposition of Comments
V. OSM's Decision

I. Background on the Kentucky Program

Section 503(a) of the Act permits a State to assume primacy for the regulation of surface coal mining and reclamation operations on non-Federal and non-Indian lands within its borders by demonstrating that its program includes, among other things, ''a State law which provides for the regulation of surface coal mining and reclamation operations in accordance with the requirements of the Act * * * and rules and regulations consistent with regulations issued by the Secretary pursuant to the Act'' *See* 30 U.S.C. 1253(a)(1) and (7). On the basis of these criteria, the Secretary of the Interior conditionally approved the Kentucky program on May 18, 1982. You can find background information on the Kentucky program, including the Secretary's findings, the disposition of comments, and conditions of approval of the Kentucky program in the May 18, 1982, **Federal Register** (47 FR 21434). You can also find later actions concerning Kentucky's program and program amendments at 30 CFR 917.11, 917.12, 917.13, 917.15, 917.16, and 917.17.

II. Submission of the Proposed Amendment

On March 15, 2002, the Kentucky General Assembly enacted House Bill No. 556 (HB 556), which established the Pine Mountain Trail State Park in southeastern Kentucky. The bill provides that HB 556 and its implementing regulations are to be administered by the Kentucky Department of Parks. On October 31, 2002, we requested that Kentucky submit HB 556 as an amendment to the Kentucky regulatory program. The State submitted its response to our request on March 27, 2003, sending HB 556 to us for processing as a State program amendment (Administrative Record No. 1574).

We announced our intent in the June 27, 2003 **Federal Register** (68 FR 38255) to determine whether HB 556 required us to issue a decision on the submission as an amendment to the Kentucky regulatory program and whether, if it is an amendment, HB 556 is consistent with Federal unsuitability provisions contained in the Surface Mining Control and Reclamation Act of 1977 (SMCRA). Because we are answering the first question in the negative, we will not reach the second question.

In the same document, we opened the public comment period and provided an opportunity for a public hearing or meeting on the submission. We did not hold a public hearing or meeting because no one requested one. The public comment period ended on July 28, 2003. We received comments from two Federal agencies (the U.S. Department of the Interior, Fish and Wildlife Service, and the U.S. Department of Labor, Mine Safety and Health Administration). We also received comments from the Kentucky Resources Council, Inc. and the Kentucky Coal Association.

III. OSM's Findings

Federal regulations at 30 CFR 732.17 establish procedures and requirements for processing and requiring State program amendments. That section of the regulations applies to any proposed changes which affect implementation of the approved regulatory program. We have reviewed HB 556 in the context of these criteria and have determined that HB 556 does not require OSM's approval as an amendment to the Kentucky regulatory program as discussed below.

HB 556 establishes the Pine Mountain Trail State Park in Southeastern Kentucky. The bill provides that HB 556 and its implementing regulations are to be administered by the Kentucky Department of Parks. Thus, the bill does not amend or alter the State's law or regulations that constitute the approved program in Kentucky. They remain intact. For this reason, we have determined that HB 556 does not meet any of the criteria contained in 30 CFR 732.17, and, therefore, does not qualify as a program amendment. Although HB 556 refers to the Kentucky regulatory program, it does not change the Kentucky Surface Mining Law or its implementing regulations.

We recognize that this notice leaves unanswered the question of whether or not HB 556 is consistent with SMCRA. However, in not answering this question, we are acting in a manner consistent with our June 27, 2003, **Federal Register** notice, which stated that we would address this question only if we determined that HB 556 constituted a program amendment. In any event, that question would need to be addressed through a separate rulemaking under 30 CFR 730.11, if we should initially determine that HB 556 is inconsistent with SMCRA or the Federal regulations. We have not made such an initial determination, nor do we conclude that we need to address the issue at this time.

Nevertheless, we recognize that the filing of a surface coal mining application for lands within boundaries of the Pine Mountain Trail State Park, or the filing of a petition to declare lands adjacent to or visible from the park unsuitable for surface coal mining operations, could raise the question of whether or not HB 556 adversely affects the implementation of the approved Kentucky regulatory program, with respect to the Pine Mountain Trail State Park. In the event of such an occurrence, we will address the question of whether any portion of HB 556 is inconsistent with SMCRA or the Federal regulations. If we make a preliminary determination in the affirmative, we will subsequently initiate a rulemaking wherein we will announce that preliminary determination and will propose that any offending portions of HB 556 be set aside and thereby rendered unenforceable by the State, in accordance with Section 505(b) of SMCRA, 30 U.S.C. 1255(b), and 30 CFR 730.11(a) of the Federal regulations.

IV. Summary and Disposition of Comments

Public Comments

The Kentucky Coal Association submitted comments dated July 24, 2003, (Administrative Record No. KY–1592) in which it indicated that HB 556 should not be considered an amendment to the Kentucky regulatory program because it does not revise the Kentucky law or regulations related to surface coal mining operations.

OSM agrees with this comment, for the reasons stated above in the findings.

The Kentucky Resources Council, Inc. (KRC) submitted comments dated July 28, 2003 (Administrative Record No. KY–1593). KRC stated that HB 556 must be considered a program amendment, because it ''dramatically affects the administration and enforcement of the unsuitability and buffer zone provisions of the approved state program.'' For the reasons stated in our findings, above, we have concluded that HB 556 does not constitute a State program amendment. Therefore, we disagree with KRC on this point.

KRC further stated that HB 556 is inconsistent with Section 522 of SMCRA because it: (1) Mandates that the Department of Parks waive the 300 foot buffer zone provisions; and (2) precludes the filing of a petition to designate areas as unsuitable for mining within the viewshed of the park.

In response, we note that because we have determined that HB 556 is not a

program amendment, we need not decide at this time whether any or all portions of the bill are inconsistent with SMCRA or the Federal regulations. As such, we need not respond to these KRC comments at this time.

However, the KRC also argues that we cannot defer our decision on the consistency of HB 556 with SMCRA until actual harm, *i.e.,* surface coal mining within the 300 feet buffer zone or within the viewshed of the Park, becomes imminent. We disagree. Neither SMCRA nor the Federal regulations place time limits on decisions as to whether State laws or regulations are inconsistent with SMCRA, and therefore must be set aside. Rather, 30 CFR 730.11(a) merely requires us to ''publish a notice of proposed action * * * setting forth the text or a summary of the text of any State law or regulation *initially determined * * * to be inconsistent with the Act or this chapter.*'' (Emphasis added) We have yet to make such an initial determination, nor do we need to do so at this time. However, should the State or others initiate actions that would warrant our addressing the consistency question, there will be ample time during the State's administrative processing of these actions for us to address the question and, if warranted, to institute set-aside proceedings pursuant to 30 CFR 730.11(a). We also note that the KRC is free to seek injunctive relief against the State or any mining applicant, to prevent mining within 300 feet of the Park, while our set-aside determination is pending, should KRC believe such mining would be inconsistent with the approved Kentucky program.

Federal Agency Comments

The U.S. Department of Labor, Mine Safety and Health Administration (MSHA) submitted a letter dated July 22, 2003, that it had no comments (Administrative Record No. KY–1591).

The U.S. Department of the Interior, Fish and Wildlife Service submitted comments dated July 31, 2003, (Administrative Record No. KY–1594) in which it indicated concern for the waiver of the 300 foot buffer zone.

As discussed in our findings, above, we have determined that HB 556 is not a program amendment. We will consider the buffer zone waiver issue only if and when it is ripe for a decision.

Dated: December 2, 2003.

Brent Wahlquist,

Regional Director, Appalachian Regional Coordinating Center.

[FR Doc. 03–32106 Filed 12–30–03; 8:45 am]

BILLING CODE 4310–05–P

FEDERAL COMMUNICATIONS COMMISSION

47 CFR Part 32

[WC Docket No. 02–269; CC Docket No. 00–199; CC Docket No. 80–286; CC Docket No. 99–301; FCC 03–326]

Federal-State Joint Conference on Accounting Issues

AGENCY: Federal Communications Commission.

ACTION: Notice of proposed rulemaking.

SUMMARY: This document seeks comment on recommendations by the Federal-State Joint Conference on Accounting Issues (Joint Conference).

DATES: Comments are due on January 30, 2004, and reply comments are due on February 17, 2004.

FOR FURTHER INFORMATION CONTACT: Jane E. Jackson, Associate Chief, Wireline Competition Bureau, (202) 418–1500.

SUPPLEMENTARY INFORMATION: This is a summary of the Commission's Notice of Proposed Rulemaking adopted on December 17, 2003, and released on December 23, 2003. The full text of the document is available for public inspection and copying during regular business hours at the FCC Reference Information Center, Portals II, 445 12th Street, SW., Room CY–A257, Washington, DC 20554. This document may also be purchased from the Commission's duplicating contractor, Qualex International, Portals II, 445 12th Street, SW., Room CY–B402, Washington, DC 20554, telephone (202) 863–2893, facsimile (202) 863–2898, e-mail *qualexint@aol.com.*

Synopsis of Order

In this Notice of Proposed Rulemaking, comment is sought on recommendations of the Joint Conference. The Commission convened the Joint Conference on August 27, 2002, as a Federal-State partnership to reexamine regulatory accounting requirements, and recommend additions and modifications thereto. On October 9, 2003, the Joint Conference submitted the result of a year-long study of the Commission's accounting rules and on-going proceedings related to the Commission's accounting requirements. Here, comment is sought on those recommendations. Comment also is sought on further delaying the implementation of four accounting and reporting rule changes, to allow time for receipt and consideration of comments responding to the Joint Conference's recommendations with regard to the four rule changes.

Federal Communications Commission.

William F. Caton,

Deputy Secretary.

[FR Doc. 03–32148 Filed 12–30–03; 8:45 am]

BILLING CODE 6712–01–M

DEPARTMENT OF TRANSPORTATION

Federal Motor Carrier Safety Administration

49 CFR Parts 390 and 396

[Docket No. FMCSA–98–3656]

RIN 2126–AA38

General Requirements; Inspection, Repair, and Maintenance; Intermodal Container Chassis and Trailers

AGENCY: Federal Motor Carrier Safety Administration (FMCSA), DOT.

ACTION: Withdrawal of advance notice of proposed rulemaking (ANPRM).

SUMMARY: FMCSA withdraws its February 17, 1999, ANPRM relating to responsibilities for the inspection, repair, and maintenance of intermodal container chassis and trailers. After reviewing the public comments received in response to the ANPRM, transcripts from three listening sessions held in November 1999, comments submitted in response to the agency's November 29, 2002, notice of intent to consider a negotiated rulemaking, and the neutral convenor's final report, the agency has determined that it would be inappropriate to move forward with a Notice of Proposed Rulemaking at this time. FMCSA believes there is insufficient data concerning the relationship between the mechanical condition of intermodal container chassis and trailers, and commercial motor vehicle accidents to quantify the extent to which the condition of container chassis or trailers contributed, in whole or in part, to accidents. Furthermore, the neutral convenor hired by the agency to interview individuals or organizations that might represent interests that are most likely to be substantially affected by a rulemaking concerning this subject, has concluded that a negotiated rulemaking process seeking to produce a set of consensus recommendations to FMCSA should not be undertaken. Therefore, no further consideration will be given to conducting a negotiated rulemaking.

FOR FURTHER INFORMATION CONTACT: Mr. Larry W. Minor, Chief of the Vehicle and Roadside Operations Division (MC–PSV), (202) 366–4009, Federal Motor Carrier Safety Administration, 400

Seventh Street, SW., Washington, DC 20590.

SUPPLEMENTARY INFORMATION: The electronic file of this document is available from the DOT public docket at *http://dms.dot.gov*, docket number FMCSA–98–3656. It is also available from FMCSA's Web site at *http://www.fmcsa.dot.gov/rulesregs/fmcsr/rulemakings*; or the **Federal Register** Web site at *http://www.gpoaccess.gov*. If you do not have access to the Internet, you may request a copy of this document from the person identified above under **FOR FURTHER INFORMATION CONTACT.** You must identify the title and docket number of the document.

Docket: For access to the docket to read background documents or comments received, go to *http://dms.dot.gov* at any time or to Room PL–401 on the plaza level of the Nassif Building, 400 Seventh Street, SW., Washington, DC, between 9 a.m. and 5 p.m., Monday through Friday, except Federal Holidays.

Privacy Act: Anyone is able to search the electronic form of all comments received into any of our dockets by the name of the individual submitting the comment (or signing the comment, if submitted on behalf of an association, business, labor union, etc.). You may review DOT's complete Privacy Act Statement in the **Federal Register** published on April 11, 2000 (65 FR 19477) or you may visit *http://dms.dot.gov*.

Background

On February 17, 1999 (64 FR 7849), the Federal Highway Administration (FHWA) published an ANPRM to consider whether 49 CFR parts 390 and 396 of the Federal Motor Carrier Safety Regulations (FMCSRs) should be amended to shift the responsibility for ensuring that intermodal container chassis and trailers comply with the applicable motor carrier safety regulations from motor carriers operating such vehicles, to entities (ocean carriers, rail carriers, intermodal terminal operators, ports) that offer these vehicles for transportation in interstate commerce. This action was in response to a petition for rulemaking filed by the American Trucking Associations, Inc. (ATA) and the ATA Intermodal Conference (the Petitioners). The Petitioners argued motor carriers have no opportunity to maintain this equipment and that the parties who do have the opportunity often fail to do so. The Petitioners requested the FMCSRs be amended to require rail carriers, ocean carriers, and other entities that offer intermodal container chassis for transportation in interstate commerce to ensure chassis meet applicable Federal safety requirements.

Discussion of ANPRM and Listening Session Comments

The agency received 104 comments from 71 interested parties in response to the ANPRM and 102 individuals spoke at one or more of the three listening sessions. Most of the commenters to the docket and speakers during the listening session were motor carriers, ocean carriers, rail carriers or terminal operators. The following table identifies participants by industry sector.

Industry sector	Docket	Chicago	New York	Seattle
Motor Carriers/Motor Carrier Industry	39	15	16	6
Port/Marine Terminal/Ocean Carrier/Representatives	24	8	12	12
Railroad/Representatives	2	11	8	6
Shipper	1			
State Agency	1			
Intermodal Association of North America (IANA)/Consultant/Other	3	2	3	1
Maritime Union Members	1			2
Total	71	36	39	27

Stakeholder opinions about potential resolutions were largely polarized into one of two basic positions:

- Motor carriers agreed with Petitioners and expressed concerns about the lack of attention to chassis maintenance on the part of the equipment providers.
- Terminal operators and equipment providers were opposed to amending the FMCSRs to shift responsibility from motor carriers to equipment providers.

The major issues raised and stakeholder perspectives are discussed below.

Lack of Data To Determine Safety Impacts Current Maintenance Practices

While the Petitioners and those in favor of the petition argued the lack of adequate maintenance by equipment providers is a safety issue, there appeared to be no data available to support this assertion. There was a lack of data presented in both the docket submissions and in the information offered at the listening sessions. The available data show a significant number of chassis dispatched from intermodal terminals are later shown to have safety defects during roadside inspection, but the relationship between these defects and accidents has not been substantiated. Overall, most of the information presented during the public meetings was anecdotal.

The responses to the questions presented in the ANPRM and questions asked by U.S. Department of Transportation representatives (Office of the Secretary, Office of Motor Carrier Safety (prior to the establishment of FMCSA), FHWA, Federal Railroad Administration, Maritime Administration) during the listening sessions produced no meaningful data to either define the problem or evaluate potential solutions. Commenters to the docket and participants in the meetings appeared to be in agreement that better data should be developed before a decision is made by the agency to pursue this issue.

Adequacy of Chassis Maintenance and Inspection

The comments submitted to the docket and the remarks of participants in the public meetings suggest there is a need to clarify industry practices concerning the maintenance of intermodal container chassis. Commenters and participants indicated most ocean carriers, rail carriers, terminal operators, and motor carriers take seriously their responsibility to operate only roadworthy equipment. However, they acknowledge other members of the intermodal transportation industry are doing only the minimum necessary to ''get by.''

Commenters and participants fundamentally disagree on the adequacy of preventive maintenance and inspection practices at many terminals. Terminal operators indicated they have effective maintenance and inspection programs in place. Equipment Interchange Discussion Agreement (EIDA), an association of nine ocean common carriers, stated its members

have literally hundreds of facilities employing over a thousand mechanics and inspectors and that equipment maintenance is their single largest expense. American President Lines (APL) spends over $36 million annually on 63,000 chassis; Maersk spends $17 million on 32,000 chassis, a rough average of $500 per year per chassis. A representative of an ocean carrier explained that this attention to maintenance and comprehensive equipment inspection is driven by the market realities of customer expectations.

Generally, motor carriers agreed that some terminal operators made significant efforts to improve. However, they continue to have concerns about the equipment providers' inbound inspection process. Motor carriers believe it is in the financial interest of equipment providers to let chassis leave the terminal without noting defects or deficiencies and then pointing out mechanical problems when the container chassis is returned. The mechanical problems then are blamed on motor carriers and the costs for repairs are subsequently passed on to them.

Motor carriers argue chassis repair and maintenance should be done before motor carriers arrive at the terminal. They believe roadability lanes offered by some equipment providers are a good idea, but preventative maintenance would be better. Chassis maintenance is too often undertaken on an as-needed basis rather than as part of a scheduled preventive maintenance program.

Adequacy of Roadability/Walk-Around Inspections

Commenters and participants recognize that roadability lanes are available in some terminals, but they appear to be used by only a small percentage of drivers. If roadability lanes or similar facilities are available, the time involved in using them makes this option problematic since most drayage drivers are paid by the trip, not by the hour. It was observed company drivers who are paid by the hour take advantage of roadability lanes more often than owner-operators who are paid on a per trip basis.

Motor carriers argued that at many rail terminals drivers cannot get out of their trucks to do chassis inspection and they claim that there is no staff available to assist them. However, EIDA members and other terminal operators asserted that they provided drivers with ample opportunity to perform the required walk-around inspection prior to departure.

Commenters emphasized that some vehicle components cannot be inspected by one person working alone. For example, checking brake adjustment typically requires one person to apply the brakes while another person measures the push-rod travel. Motor carriers argue significant mechanical defects typically cited by roadside inspectors cannot be identified during a walk-around inspection. They assert walk-around inspections cannot substitute for routine inspection and maintenance by the terminal operator's mechanics.

Owner-operators agreed walk-around inspections do not typically reveal all the defects that Federal or State inspectors may find during a more thorough inspection. Also, if a defect is found during the walk-around inspection it is likely to generate a costly delay in leaving the terminal. Owner-operators argue the driver's walk-around inspection should be considered a back up to the routine and detailed inspection by the equipment provider, not the primary means to detect defects.

Impacts of Changing Responsibility for Chassis Roadability

EIDA estimates that the incremental cost of shifting this responsibility to the terminal operators would be about $200 per chassis per year. This would represent a 40-percent increase in operating costs. These increased operating costs would be ultimately borne by the transportation system and by consumers. These estimates do not include increased equipment, facility, and other capital costs. AAR estimates that it would cost the railroads over $200 million annually if maintenance responsibilities are shifted to terminals.

Since the current Federal regulations make the chassis' roadability the responsibility of motor carriers, violations concerning chassis defects become part of the motor carrier's safety record. Roadside violations are entered electronically directly into the FMCSA's database of safety performance information about motor carriers. Consequently, motor carriers are concerned about how the chassis violations may affect their safety profiles because: (1) FMCSA's Safety Status Measurement System (SAFESTAT) scores are available to the public and can be used by insurance companies and shippers as a basis for business decisions; and (2) the FMCSA's potential use of the violation data for selecting motor carriers for compliance reviews. Regardless of whether the chassis owner accepts responsibility for the violation and pays for the repairs, the violation remains on the motor carrier's safety record. As a result, the issue of assignment of responsibility is of importance to motor carriers.

Institutional Issues

Motor carriers involved in port drayage operations estimate their drivers spend 25 percent or more of their time waiting in line at terminals, without compensation. Motor carriers believe that because of the highly competitive nature of the drayage industry, they have no leverage. If a motor carrier or driver insists on improved business terms he will simply be replaced.

The National Association of Waterfront Employers (NAWE) acknowledged the economic pressures force drivers to leave the terminal as soon as possible. Some of the commenters to the docket and participants in the public meetings believe the situation would change significantly if drivers were paid by the hour.

The Uniform Intermodal Interchange Facilities Access Agreement (the Uniform Agreement) governs the relationship between equipment providers and motor carriers. The Uniform Agreement was initiated 20 years ago, and is continually reviewed by a multimodal committee. IANA estimates that its participants include more than 4,700 motor carriers, 6 railroads and 55 ocean carriers.

A nine-member board administers the agreement: 3 motor carriers; 3 rail carriers, and 3 ocean or water carriers. Participants in the public meetings indicated there is a willingness to re-negotiate terms of the Uniform Agreement but not to shift responsibility from motor carriers.

The Uniform Agreement states:

> The user, while in possession of interchange equipment, releases and agrees to hold harmless the owner from and against any and all loss, damage, liability, cost or expenses suffered or incurred arising out of or connected with injuries or death of any persons arising out of the user's use, operation, maintenance or possession of interchange equipment.

A copy of the Uniform Agreement is included in the Through Transport Mutual Insurance Association, Ltd. (TTClub) comments. The agreement specifically states that the equipment provider makes no warranties as to the fitness of the equipment. A common addendum to the Uniform Agreement requires that the driver warrant that the equipment he is receiving is roadworthy.

Equipment providers argue that making motor carriers responsible for

the chassis is necessary because the equipment may be interchanged among several motor carriers after leaving the terminal. EIDA believes equipment providers accept responsibility for the equipment while it is in their possession and will repair any deficiencies prior to turning the equipment over to motor carriers. However, once a motor carrier accepts the chassis, the motor carrier must assume the duty of maintaining the equipment up to safety standards. The equipment providers believe the disclaimers in the agreement merely eliminate any strict liability that might otherwise be assumed.

State Regulations

Commenters expressed concern about a growing number of potentially conflicting State roadability laws. They believed the result would be a patchwork of inconsistent regulations negatively impacting the ability of the United States to operate a national intermodal transportation system.

Marine terminal operators, ocean carriers, and railroads emphasize the importance of taking action to preempt current and forthcoming State regulations concerning intermodal equipment inspection and interchange that will negatively impact interstate and international commerce, intermodal transportation, and the authority of the United States Department of Transportation.

Consideration of the Negotiated Rulemaking Process

On November 29, 2002 (67 FR 71127), the FMCSA published a notice announcing that the agency would study the feasibility of using the Negotiated Rulemaking process to develop rulemaking options concerning the maintenance of intermodal container chassis and trailers.

On February 24, 2003, FMCSA extended the comment period based upon a request by the counsel for the American Association of Railroads to allow additional time for filing comments after a planned meeting of IANA and the Ocean Carrier Equipment Management Association (OCEMA).

The IANA/OCEMA working group subsequently failed to develop a private-sector solution to the assignment of responsibility for maintaining intermodal chassis and trailers.

Results of the Convenor's Interviews

Typically, the first step in examining the feasibility of conducting a negotiated rulemaking is to conduct a ''convening,'' or conflict assessment. During this process the convener identifies and interviews the interests that would be substantially affected by the proposed policy change and individuals or organizations that might represent those interests. Based upon the interviews, the convener identifies issues of concern that may warrant addressing, and explores whether the establishment of a committee is feasible and appropriate in the particular situation. The following are the issues the convenor identified in his report to FMCSA concerning the feasibility of conducting a negotiated rulemaking on container chassis maintenance. A copy of the report is in Docket No. FMCSA–98–3656.

Extent of the Chassis Roadability Problem

The interviewees that supported moving forward with the rulemaking believe equipment defects on container chassis are a serious safety problem. As with the case of commenters to the public docket, and participants in the public meetings, interviewees also indicated many of the serious defects on container chassis are not visible during a walk-around or visual inspection.

When motor carriers leave the port terminal, according to interviewees, they are supposed to certify that the equipment is roadworthy and that there is no damage. Many motor carriers said that some terminals do relatively little about inspecting outbound chassis, but considerably more about inspecting in-bound ones. Therefore, motor carriers may be held responsible for damage that was not reported outbound, even if it was pre-existing. Some interviewees suggested the solution includes holding the equipment provider responsible for inspecting and certifying a chassis before releasing it to the motor carrier.

Interviewees that were opposed to continuing the rulemaking believe there is a lack of data to support the Petitioners' argument that a safety problem exists with container chassis maintenance. While a number of them agreed that equipment violations are numerous, they argue that it is difficult to show the violations have caused accidents. These interviewees said that in many instances motor carriers receive citations for violations concerning equipment conditions that could not be detected during a walk-around or visual inspection. However, they do not believe such violations warranted additional Federal regulations. Some indicated they believe private-sector solutions would offer greater flexibility and be less costly and more effective than new Federal regulations.

State Laws and Regulations

Almost all of the interviewees expressed concern about a recent trend toward States enacting roadability laws. They indicated that in the late 1990s, Illinois, Louisiana, and South Carolina legislatures passed laws shifting responsibility for roadworthiness of intermodal chassis from motor carriers to the party tendering the intermodal equipment. Interviewees reported that most of the States are not enforcing their roadability laws.

Interviewees expressed concern the State laws have taken differing, sometimes inconsistent regulatory approaches to coverage. The State laws were viewed as a means of dealing with vehicles that were not being properly maintained, and assigning inspection, repair and maintenance responsibilities to ensure the proper and safe operation of the chassis. Nearly all interviewees reported that a growing patchwork of inconsistent State laws would adversely impact intermodal transportation.

There was widespread agreement among interviewees that FMCSA could make a major impact by adopting regulations, and preempting State laws and regulations. They noted States may have powerful economic incentives to limit enforcement of roadability legislation, especially given the possibility that they could risk the movement of shipping business and port operations to States with less stringent regulations, or no roadability rules at all. Two interviewees discussed personal stories where direct gubernatorial intervention halted enforcement efforts. Therefore, there is the belief State motor carrier enforcement agencies may face a difficult choice between maintaining major terminal operations that provide jobs and economic stimuli and enforcing their own rules.

Some interviewees favored the rights of States to pass roadability laws because they believe FMCSA has not done enough to improve the condition of container chassis. However, interests were divided over whether preemption should be the end process or merely the beginning. A few interviewees believed FMCSA should preempt the States but do nothing more. Others believed FMCSA should preempt the States only if it is part of a plan or program to resolve a number of issues concerning the intermodal industry.

Jurisdiction and Enforcement Issues

Interviewees expressed widely divergent views as to the limits of FMCSA's legal authority relating to equipment providers such as terminal

operators, rail carriers and ocean carriers that furnish chassis for transportation by motor carriers. Many believed FMCSA lacks statutory authority to regulate non-motor carrier entities.

Uniform Agreement

Some motor carriers expressed concern their interests are not fully represented on the governing board because they are in a minority position relative to the rail and water carriers. These motor carriers believe the Department of Transportation should regulate the interchange agreement and address the unequal bargaining power between rail/water carriers and motor carriers. Others believed the Department of Transportation should not regulate the interchange agreement because it is the result of years of evolution of the commercial relationship between the motor carriers and the equipment providers.

Of concern to many motor carriers is that the interchange agreement states that equipment providers do not warrant the roadability of the equipment. Moreover, an addendum to the interchange agreement requires the motor carrier that picks up the equipment to accept responsibility for the roadworthiness of the chassis.

However, some interviewees did not believe the interchange agreement is the appropriate mechanism to implement changes in the intermodal industry because usage of the interchange agreement is only voluntary. They argue that the use of the interchange agreement is prevalent, but there is no data to indicate how much of the industry is actually covered by it. In contrast, other interviewees believe changes to the uniform agreement would become the industry standard and be sanctioned by DOT.

FMCSA Decision

FMCSA withdraws the ANPRM because there is insufficient data to support moving forward with the rulemaking at this time. While the agency could quantify the costs of regulatory options that could potentially result in improved maintenance practices by equipment providers, there is insufficient data currently to quantify the safety benefits of such a rulemaking. The agency has reviewed information provided by commenters responding to the ANPRM, transcripts from listening sessions, safety performance data concerning motor carriers engaged primarily in intermodal transportation, and the neutral convenor's final report. FMCSA has determined it is unlikely the agency could craft a rulemaking that would resolve the maintenance responsibility disputes between equipment providers and motor carriers, and be supported with sufficient safety data to prove its necessity, and subsequently its effectiveness. The available data show a significant number of container chassis dispatched from intermodal terminals are later shown to have safety defects during roadside inspection. However, the relationship between these defects and accident causation has not been substantiated.

FMCSA recognizes most motor carriers do not have the economic leverage to persuade equipment providers to ensure proper chassis maintenance. It is also true the Uniform Intermodal Interchange and Facilities Access Agreement that motor carriers typically must sign in order to do business has the effect of shifting both the maintenance or repair burden and the liability to motor carriers. Based on the comments to the ANPRM, statements from participants in the listening sessions, and the interviews conducted by the neutral convenor who examined the feasibility of conducting a negotiated rulemaking on this subject, there is no readily apparent regulatory option that would be well received among the many parties.

There are two data limitations that prevent the agency from proceeding with a defensible rulemaking: (1) chassis inspection and accident data is lumped in among ''trailer'' data; and (2) relatively few accidents are shown as involving chassis, possibly because the short distances chassis travel work to reduce accident exposure or possibly because the chassis are categorized as ''trailers'' in the accident reports. The first step toward a Federal rule must be data collection, addressing these data limitations, and possibly identifying chassis owners whose equipment shows a pattern of poor maintenance.

FMCSA is considering options to better capture data about chassis at the point of inspection and at accident scenes. A special study could be conducted if resources become available. However, the time required to complete a comprehensive data collection and analysis effort would prolong the period that the rulemaking is left unresolved, with no certainty regarding the outcome. Therefore, FMCSA believes it is in the best interests of all parties that the agency discontinue consideration of a negotiated rulemaking based on the convenor's final report, and withdraw its 1999 ANPRM.

Issued on: December 1, 2003.

Annette M. Sandberg,

Administrator.

[FR Doc. 03–32075 Filed 12–30–03; 8:45 am]

BILLING CODE 4910–EX–P

Notices

Federal Register

Vol. 68, No. 250

Wednesday, December 31, 2003

This section of the FEDERAL REGISTER contains documents other than rules or proposed rules that are applicable to the public. Notices of hearings and investigations, committee meetings, agency decisions and rulings, delegations of authority, filing of petitions and applications and agency statements of organization and functions are examples of documents appearing in this section.

DEPARTMENT OF AGRICULTURE

Submission for OMB Review; Comment Request

December 23, 2003.

The Department of Agriculture has submitted the following information collection requirement(s) to OMB for review and clearance under the Paperwork Reduction Act of 1995, Public Law 104–13. Comments regarding (a) whether the collection of information is necessary for the proper performance of the functions of the agency, including whether the information will have practical utility; (b) the accuracy of the agency's estimate of burden including the validity of the methodology and assumptions used; (c) ways to enhance the quality, utility and clarity of the information to be collected; (d) ways to minimize the burden of the collection of information on those who are to respond, including through the use of appropriate automated, electronic, mechanical, or other technological collection techniques or other forms of information technology should be addressed to: Desk Officer for Agriculture, Office of Information and Regulatory Affairs, Office of Management and Budget (OMB), *Pamela_Beverly_OIRA_Submission@OMB.EOP.GOV* or fax (202) 395–5806 and to Departmental Clearance Office, USDA, OCIO, Mail Stop 7602, Washington, DC 20050–7602. Comments regarding these information collections are best assured of having their full effect if received within 30 days of this notification. Copies of the submission(s) may be obtained by calling (202) 720–6746.

An agency may not conduct or sponsor a collection of information unless the collection of information displays a currently valid OMB control number and the agency informs potential persons who are to respond to the collection of information that such persons are not required to respond to the collection of information unless it displays a currently valid OMB control number.

Farm Service Agency

Title: On-line Registration for FSA-sponsored Events and Conferences.

OMB Control Number: 0560–0226.

Summary of Collection: The Farm Service Agency (FSA) is seeking a blanket approval for all On-Line Registrations for FSA-sponsored events and conferences. The respondents will need to submit the information on-line to pay and to make reservation prior to attending any conferences and events. The respondents that do not have access to the Internet can mail or fax the information.

Need and Use of the Information: FSA will collect the name, organization, organizations address, country, phone number, State, payment options and special accommodations from respondents. FSA will use the information to get payment, confirm and make hotel and other necessary arrangement for the respondents.

Description of Respondents: Individuals or households; Farms; Business or other for-profit; Federal government, Not-for-profit institutions; State, local or tribal government.

Number of Respondents: 900.

Frequency of Responses: Reporting: On occasion.

Total Burden Hours: 225.

Farm Service Agency

Title: USDA Minority Farm Register.

OMB Control Number: 0560–NEW.

Summary of Collection: In order to conduct outreach to socially disadvantaged people, the Farm Service Agency (FSA) must first, identify the people who are to be the recipients of and who desires the outreach services; and second, obtain their permission under the Privacy Act to release information to the organizations that will be conducting the outreach. The purpose of this data collection is to establish a voluntary register of minority farmers, landowners, tenants and others with an agricultural interest. The Register will provide a name and address file of those interested in outreach efforts. The authority for the collection of this information can be found at 7 U.S.C. 2279.

Need and Use of the Information: FSA will collect the name, address, phone number, social security number, farm location, race, ethnicity and gender from the Minority Farm Register Permission Form, FSA–1045. FSA will manage the register and will release names, addresses and phone numbers of individuals to approved outreach organizations requesting lists of individuals with particular racial and ethnic characteristics.

Description of Respondents: Individuals or households; Farms; Not-for-profit institutions; State, local or tribal government.

Number of Respondents: 55,500.

Frequency of Responses: Reporting: Other (once).

Total Burden Hours: 34,225.

Food and Nutrition Service

Title: Performance Reporting System, Management Evaluation.

OMB Control Number: 0584–0010.

Summary of Collection: The purpose of the Performance Reporting System is to ensure that each State agency and project area is operating the Food Stamp Program in accordance with the Act, regulations, and the State agency's Plan of Operation. Section 11 of the Food Stamp Act of 1977, amended, requires State agencies to maintain necessary records to ascertain that the Food Stamp Program is operating in compliance with the Act and regulations and must make these records available to the Food and Nutrition Service (FNS) for inspection.

Need and Use of the Information: FNS will use the information to evaluate state agency operations and to collect information that is necessary to develop solutions to improve the State's administration of Program policy and procedures. Each State agency is required to submit one review schedule every one, two, or three years, depending on the project areas make-up of the state.

Description of Respondents: State, local, or tribal government.

Number of Respondents: 54.

Frequency of Responses: Recordkeeping; Reporting: Annually.

Total Burden Hours: 492,356.

Food and Nutrition Service

Title: 7 CFR Part 226 Child and Adult Care Food Program.

OMB Control Number: 0584–0055.

Summary of Collection: Section 17 of the National School Lunch Act, as amended (42 U.S.C. 1766), authorizes the Secretary of Agriculture to provide

cash reimbursement and commodity assistance, on a per meal basis, for food service to children in nonresidential child care centers and family day care homes, and to eligible adults in nonresidential adult day care centers. The Food and Nutrition Service (FNS) has established application, monitoring, recordkeeping, and reporting requirements to manage the Program effectively, and ensure that the legislative intent of this mandate is responsibly implemented. The information collected is necessary to enable institutions wishing to participate in the Child and Adult Care Food Program (CACFP) to submit applications to the administering agencies, execute agreements with those agencies, and claim the reimbursement to which they are entitled by law.

Need and Use of the Information: FNS and State agencies administering the Program will use the collected information to determine eligibility of institutions to participate in the CACFP, ensure acceptance of responsibility in managing an effective food service, implement systems for appropriating Program funds, and ensure Compliance with all statutory and regulatory requirements.

Description of Respondents: State, local, or tribal government; Individuals or households; Not-for-profit institutions.

Number of Respondents: 2,930,467.

Frequency of Responses: Recordkeeping; Reporting: On occasion; Biennially; Semi-annually; Monthly and Annually.

Total Burden Hours: 5,778,439.

Title: Application for the Senior Community Service Employment Program.

OMB Control Number: 0596–0099.

Summary of Collection: The Senior Community Service Employment Program (SCSEP) is administered by Title V of the Older Americans Act of 1965, as amended. The Secretary of Labor administers this program in order to foster and promote useful part-time opportunities in community services activities for unemployed low-income persons who are age 55 or older. The Forest Service (FS) participates as one of 13 national sponsors under a grant agreement from the Department of Labor, which operates the SCSEP in 40 states, the District of Columbia, and Puerto Rico. Under the grant agreement the FS recruits and enrolls approximately 5,000 economically disadvantaged persons annually to perform part-time community service assignments within the national forest and surrounding communities. Through the SCSEP the vast majority of applicants become self-reliant and independent of welfare program and have upgraded their skills and transition into the regular labor market. The FS will collect information using form FS 1800–21b ''Application for Senior Community Service Employment Program.''

Need and Use of the Information: FS will collect the following information: Identification data (name, address, and birth date); eligibility information (number in family, income and signature); applicant's disposition (family income level determination, eligibility determination, community service assignment determination); and other information such as age, sex, education level, ethnic group, social security number, his/her veteran and handicapped position. The information will be used to identify personal data. The information will also be used to provide the administrative office, Department of Labor, data on the program's target attainments. If the FS does not collection the above data from each applying to the SCSEP, participant eligibility determination could not be legally made thereby eliminating the FS as a national program sponsor.

Description of Respondents: Individuals households.

Number of Respondents: 6,500.

Frequency of Responses: Reporting: Other (initial application).

Total Burden Hours: 1,083.

Forest Service

Title: Guidelines for Eligibility and Required Documentation for the Golden Access Passport.

OMB Control Number: 0596–NEW.

Summary of Collection: The Golden Access Passport was created in 1980 by an amendment to the Land and Water Conservation Fund Act (LWCFA) of 1965. A Golden Access Passport is a free, lifetime permit that is issued without charge by the National Park Service, Bureau of Land Management, Bureau of Reclamation, and Fish and Wildlife Service, Department of the Interior, the Forest Service, Department of Agriculture, and the U.S. Army Corps of Engineers, Department of Defense to citizens or persons who are domiciled (permanent residents) in the United States, regardless of age, and who have a medical determination and documentation of blindness or permanent disability. Golden Access Passport may be obtained in person and upon proof of blindness or medically determined permanent disability in accordance with the criteria established in the LWCFA of 1965, as amended. In order to clarify and simplify the process for persons with disabilities to obtain the Golden Access Passport, all of the agencies that issue this free lifetime Passport cooperated in the development of the Guidelines for Eligibility and Required Documentation for the golden Access Passport. The authority for this information collection can be found at 16 U.S.C. 4601–6a(b).

Need and Use of the Information: Each agency will use the guidelines when assisting customers seeking to obtain the Passport. The applicant's document or signed statement is used to verify that the individual is qualified to receive the Golden Access Passport. The documentation must be shown or the statement signed in person to ensure that the person signing the Passport is the person to whom the documentation was issued. If the agencies did not have a process by which to determine that these golden Access Passports are only issued to persons who have been medically determined to be blind or permanently disabled, the agencies would not be able to issue Passports in accordance with the LWCFA requirements.

Description of Respondents: Individuals or households.

Number of Respondents: 59,810.

Frequency of Responses: Reporting: Other (Initial Application).

Total Burden Hours: 4,984.

Ruth Brown,

Departmental Information Collection Clearance Officer.

[FR Doc. 03–32014 Filed 12–30–03; 8:45 am]

BILLING CODE 3410–01–M

DEPARTMENT OF AGRICULTURE

Forest Service

Tehama County Resource Advisory Committee

AGENCY: Forest Service, USDA.

ACTION: Notice of meeting.

SUMMARY: The Tehama County Resource Advisory Committee (RAC) will meet in Red Bluff, California. Agenda items to be covered include: (1) introductions, (2) approval of minutes, (3) Public Comment, (4) Chairman Report (5) Reports from committees, (6) General discussion, (7) Next Agenda.

DATES: The meeting will be held on January 8, 2004, from 9 a.m. and end at approximately 12 p.m.

ADDRESSES: The meeting will be held at the Lincoln Street School, Conference Room A, 1135 Lincoln Street, Red Bluff, CA. Individuals wishing to speak or propose agenda items must send their names and proposals to Jim Giachino,

DFO, 825 N. Humboldt Ave., Willows, CA 95988.

FOR FURTHER INFORMATION CONTACT: Bobbin Gaddini, Committee Coordinator, USDA, Mendocino National Forest, Grindstone Ranger District, P.O. Box 164, Elk Creek, CA 95939; (530) 968–5329; e-mail *ggaddini@fs.fed.us*.

SUPPLEMENTARY INFORMATION: The meeting is open to the public. Committee discussion is limited to Forest Service staff and Committee members. However, persons who wish to bring matters to the attention of the Committee may file written statements with the Committee staff before or after the meeting. Public input sessions will be provided and individuals who made written requests by January 6, 2004, will have the opportunity to address the committee at those sessions.

Dated: December 23, 2003.

Arthur Quintana,

Acting Designated Federal Official.

[FR Doc. 03–32150 Filed 12–30–03; 8:45 am]

BILLING CODE 3410–11–M

ARCHITECTURAL AND TRANSPORTATION BARRIERS COMPLIANCE BOARD

Meeting

AGENCY: Architectural and Transportation Barriers Compliance Board.

ACTION: Notice of meeting.

SUMMARY: The Architectural and Transportation Barriers Compliance Board (Access Board) has scheduled its regular business meetings to take place in Washington, DC on Tuesday and Wednesday, January 13–14, 2004, at the times and location noted below.

DATES: The schedule of events is as follows:

Tuesday, January 13, 2004

10:30–Noon Ad Hoc Committee on Public Outreach.
1:30–3 p.m. Technical Programs Committee.
3–4 p.m. Planning and Budget Committee.
4–5 p.m. Passenger Vessels Ad Hoc Committee (closed session).

Wednesday, January 14, 2004

9–10:30 a.m. Passenger Vessels Ad Hoc Committee (closed session).
10:30–Noon Public Rights-of-Way Ad Hoc Committee (closed session).
1:30–3:30 p.m. Board meeting.

ADDRESSES: The meetings will be held at the Marriott at Metro Center Hotel, 775 12th Street, NW., Washington, DC.

FOR FURTHER INFORMATION CONTACT: For further information regarding the meetings, please contact Lawrence W. Roffee, Executive Director, (202) 272–0001 (voice) and (202) 272–0082 (TTY).

SUPPLEMENTARY INFORMATION: At the Board meeting, the Access Board will consider the following agenda items:

Open Meeting

- Approval of the November 19, 2003, Board Meeting minutes;
- Report of the Ad Hoc Committee on Public Outreach;
- Technical Programs Committee Report;
- Planning and Budget Committee Report.

Closed Meeting

- Passenger Vessels Accessibility Guidelines;
- Public Rights-of-Way Accessibility Guidelines;
- ADA and ABA Accessibility Guidelines Final Rule (Voting).

All meetings are accessible to persons with disabilities. Sign language interpreters and an assistive listening system are available at all meetings. Persons attending Board meetings are requested to refrain from using perfume, cologne, and other fragrances for the comfort of other participants.

James J. Raggio,

General Counsel.

[FR Doc. 03–32218 Filed 12–30–03; 8:45 am]

BILLING CODE 8150–01–P

DEPARTMENT OF COMMERCE

Submission for OMB Review; Comment Request

The Department of Commerce (DOC) has submitted to the Office of Management and Budget (OMB) the following proposal for collection of information under the clearance procedures of the Paperwork Reduction Act (44 U.S.C. Chapter 35).

Agency: National Telecommunications and Information Administration (NTIA).

Title: Survey of Minority Commercial Broadcast Owners.

Agency Form Number(s): None.

OMB Approval Number: 0660–0017.

Type of Request: Regular submission.

Burden Hours: 250.

Number of Respondents: 500.

Average Hours Per Response: 30 minutes.

Needs and Uses: The Minority Telecommunications Development Program (MTDP), National Telecommunications and Information Administration has developed a survey to collect information for its periodic minority commercial broadcast ownership report. The survey is the principle method of systematically gathering information about the experiences of minority entrepreneurs entering the broadcast industry or expanding their operations. The report will provide a basis for national policies to increase minority participation in broadcasting, as well as Administration initiatives to promote economic opportunity for minority-owned businesses.

Affected Public: Business or other for-profit organizations.

Frequency: On occasion.

Respondent's Obligation: Voluntary.

OMB Desk Officer: Kim Johnson, (202) 395–7232.

Copies of the above information collection proposal can be obtained by contacting Diana Hynek, Departmental Paperwork Clearance Officer, Department of Commerce, Room 6625, 14th and Constitution Avenue NW., Washington, DC 20230, (202) 482–0266 or via the Internet at *dHynek@doc.gov*.

Written comments and recommendations for the proposed information collection should be sent within 30 days of the publication of this notice to Kimberly Johnson, OMB Desk Officer, Fax number (202) 395–7285 or *Kim_A._Johnson@omb.eop.gov.*

Dated: December 24, 2003.

Gwellnar Banks,

Management Analyst, Office of the Chief Information Officer.

[FR Doc. 03–32221 Filed 12–30–03; 8:45 am]

BILLING CODE 3510–60–P

DEPARTMENT OF COMMERCE

International Trade Administration

[A–549–813]

Notice of Amended Final Results of Seventh Administrative Review: Canned Pineapple Fruit From Thailand

AGENCY: Import Administration, International Trade Administration, Department of Commerce.

EFFECTIVE DATE: December 31, 2003.

FOR FURTHER INFORMATION CONTACT: Marin Weaver or Charles Riggle, Group II, Office 5, Import Administration, International Trade Administration, U.S. Department of Commerce, 14th Street and Constitution Avenue, NW., Washington, DC 20230; telephone: (202) 482–2336, (202) 482–0650, respectively.

Scope of Order

The product covered by this order is canned pineapple fruit (CPF). CPF is defined as pineapple processed and/or prepared into various product forms, including rings, pieces, chunks, tidbits, and crushed pineapple, that is packed and cooked in metal cans with either pineapple juice or sugar syrup added. CPF is currently classifiable under subheadings 2008.20.0010 and 2008.20.0090 of the Harmonized Tariff Schedule of the United States (HTSUS). HTSUS 2008.20.0010 covers CPF packed in a sugar-based syrup; HTSUS 2008.20.0090 covers CPF packed without added sugar (*i.e.*, juice-packed). Although these HTSUS subheadings are provided for convenience and for customs purposes, our written description of the scope is dispositive.

Amended Final Determination

In accordance with section 751(a) the Tariff Act of 1930, as amended, (the Act), on November 19, 2003, the Department published its final results of the antidumping duty administrative review of CPF from Thailand (*Notice of Final Results of Antidumping Duty Administrative Review, Rescission of Administrative Review in Part, and Final Determination to Revoke Order in Part: Canned Pineapple Fruit from Thailand,* 68 FR 65247, (*Final Results*)).

1. Vita Food Factory (1989) Co., Ltd. (Vita)

On November 20, 2003, Vita alleged that a ministerial error had been made regarding the Department's final margin calculation. *See* Ministerial Error Letter from Vita Re: Canned Pineapple Fruit from Thailand: The Seventh Administrative Review for period of July 1, 2001 to June 30, 2002 (November 20, 2003). In accordance with section 751(h) of the Act, we have determined that a ministerial error was made in determining the calculation of Vita's variable overhead cost factor. *See* Memorandum to Holly Kuga; Subject: Seventh Administrative Review of Canned Pineapple Fruit from Thailand RE: Ministerial Error Allegation Vita Food Factory Ltd. (December 17, 2003). Pursuant to section 751(h) of the Act, we have corrected the error and are amending the final results of review accordingly. The corrected margin for Vita is 1.77 percent. *See* the Memorandum from Monica Gallardo to the File, Revised Analysis Memorandum for Vita Food Factory Ltd. Re: Amended Final Results of Seventh Administrative Review of Canned Pineapple Fruit from Thailand (December 17, 2003).

2. Dole Food Company, Inc., Dole Packaged Foods Company, and Dole Thailand, Ltd.'s (collectively, Dole)

In addition, on November 20, 2003, we received timely ministerial error allegations from Maui Pineapple Company and the International Longshoremen's and Warehousemen's Union (the petitioners) regarding Dole. We have determined that the petitioners' allegations with regard to Dole do not constitute ministerial errors as defined by section 351.224(f) of the Department's regulations. *See* Memorandum to Holly Kuga; Subject: Seventh Administrative Review of Canned Pineapple Fruit from Thailand RE: Ministerial Error Allegations for Dole Food Company, Inc., Dole Packaged Foods Company, and Dole Thailand, Ltd.'s (December 17, 2003).

The Department shall determine, and the U.S. Customs and Border Protection shall assess, antidumping duties on all appropriate entries based on the amended final results. For details on the assessment of antidumping duties on all appropriate entries, *see Final Results.*

Dated: December 17, 2003.

James J. Jochum,

Assistant Secretary for Import Administration.

[FR Doc. 03–32226 Filed 12–30–03; 8:45 am]

BILLING CODE 3510–DS–P

DEPARTMENT OF COMMERCE

International Trade Administration

[A–122–849]

Notice of Initiation of Antidumping Investigation: Ready-to-Cook Kosher Chicken and Parts Thereof From Canada

AGENCY: Import Administration, International Trade Administration, Department of Commerce.

ACTION: Initiation of Antidumping Investigation.

EFFECTIVE DATE: December 31, 2003.

FOR FURTHER INFORMATION CONTACT: Magd Zalok at (202) 482–4162 or Howard Smith at (202) 482–5193, Import Administration, International Trade Administration, U.S. Department of Commerce, 14th Street and Constitution Avenue, NW., Washington, DC 20230.

Initiation of Investigation

The Petition

On December 1, 2003, the Department of Commerce (the Department) received a petition against imports of ready-to-cook Kosher chicken and parts thereof from Canada, filed in proper form by Empire Kosher Poultry, Inc. (the petitioner). On December 9, 2003, the Department issued a questionnaire to the petitioner requesting additional information and clarification of certain information contained in the petition. The Department received a response to its questionnaire on December 11, 2003.

In accordance with section 732(b)(1) of the Tariff Act of 1930, as amended (the Act), the petitioner alleges that imports of ready-to-cook Kosher chicken and parts thereof from Canada are being, or are likely to be, sold in the United States at less-than-fair-value (LTFV) within the meaning of section 731 of the Act, and that such imports from Canada are materially injuring, or are threatening to materially injure, an industry in the United States.

The Department finds that the petitioner filed this petition on behalf of the domestic industry because it is an interested party, as defined in section 771(9)(C) of the Act, and it has demonstrated sufficient industry support with respect to the antidumping investigation that it is requesting the Department to initiate. *See infra*, ''Determination of Industry Support for the Petition.''

Scope of Investigation

The merchandise covered by this investigation is ready-to-cook chicken from Canada, whether fresh, chilled or frozen and whether whole or cut-up in pieces, that has been certified as Kosher or Glatt Kosher. Symbols indicating kosher certification include, but are not limited to, COR, MK, OU, CRC. Ready to cook Kosher and Glatt kosher chicken is also identified by the number of the agricultural plant in Canada from which the product originated. For instance, ready-to-cook Kosher chicken manufactured in plant number 24 carries the COR symbol representing the Canadian Jewish Congress of Toronto.

Excluded from the scope of this investigation are Kosher or Glatt Kosher chicken wings (if unattached to any other chicken part) and offal, such as necks, gizzards, livers, and hearts. Cooked chicken or chicken parts, ready to cook non-kosher whole chicken or chicken parts are outside the scope of this investigation. The merchandise subject to this investigation is classifiable under subheadings 0207.11.00.20, 0207.11.00.40, 0207.12.00.20, 0207.12.00.40, 0207.13.00.00, and 0207.14.00.40 of the Harmonized Tariff Schedule of the United States (HTSUS).

Although the HTSUS subheadings are provided for convenience and customs

purposes, our written description of the scope of this investigation is dispositive.

As discussed in the preamble to the Department's regulations (*Antidumping Duties; Countervailing Duties; Final Rule*, 62 FR 27296, 27323 (May 19, 1997)), we are setting aside a period for parties to raise issues regarding product coverage. The Department encourages all parties to submit such comments within 20 days of publication of this notice. Comments should be addressed to Import Administration's Central Records Unit, Room 1870, U.S. Department of Commerce, 14th Street and Constitution Avenue, NW., Washington, DC 20230. The period of scope consultations is intended to provide the Department with ample opportunity to consider all comments and consult with parties prior to the issuance of the preliminary determination.

Period of Investigation

The anticipated period of investigation (POI) is October 1, 2002, through September 30, 2003.

Determination of Industry Support for the Petition

Section 732(b)(1) of the Act requires that a petition be filed on behalf of the domestic industry. Section 732(c)(4)(A) of the Act provides that the Department's industry support determination, which is to be made before the initiation of the investigation, be based on whether a minimum percentage of the relevant industry supports the petition. The Department shall determine that the petition has been filed by, or on behalf of, the industry if the domestic producers or workers who support the petition account for: (1) at least 25 percent of the total production of the domestic like product; and (2) more than 50 percent of the production of the domestic like product produced by that portion of the industry expressing support for, or opposition to, the petition. Moreover, section 732(c)(4)(D) of the Act provides that, if the petition does not establish support of domestic producers or workers accounting for more than 50 percent of the total production of the domestic like product, the Department shall: i) poll the industry or rely on other information in order to determine if there is support for the petition, as required by subparagraph (A), or ii) determine industry support for the petition using any statistically valid sampling method to poll the industry.

Section 771(4)(A) of the Act defines the ''industry'' as the producers of a domestic like product. Thus, to determine whether a petition has the requisite industry support, the statute directs the Department to look to producers and workers who produce the domestic like product. The International Trade Commission (ITC), which is responsible for determining whether ''the domestic industry'' has been injured, must also determine what constitutes a domestic like product in order to define the industry. While both the Department and the ITC must apply the same statutory definition regarding the domestic like product (section 771(10) of the Act), they do so for different purposes and pursuant to a separate and distinct authority. In addition, the Department's determination is subject to limitations of time and information. Although this may result in different definitions of the like product, such differences do not render the decision of either agency contrary to the law.[1]

Section 771(10) of the Act defines the domestic like product as ''a product which is like, or in the absence of like, most similar in characteristics and uses with, the article subject to an investigation under this title.'' Thus, the reference point from which the domestic like product analysis begins is ''the article subject to an investigation,'' *i.e.*, the class or kind of merchandise to be investigated, which normally will be the scope as defined in the petition.

The petitioner does not offer a definition of domestic like product distinct from the scope of the investigation. Based on our analysis of the information presented by the petitioner, we have determined that there is a single domestic like product, ready-to-cook Kosher chicken and parts thereof, which is defined in the ''Scope of Investigation'' section above, and we have analyzed industry support in terms of this domestic like product.

The petition identifies a number of U.S. companies, in addition to Empire Kosher Poultry, Inc., that are engaged in the production of ready-to-cook Kosher chicken. The petition includes a letter from one of these companies, David Elliot Poultry Farm, in which the company states that it supports the petition. The Department received no opposition to the petition from domestic producers of the like product.

Our review of the data provided in the petition indicates that the petitioner has established industry support representing over 50 percent of total production of the domestic like product. Therefore, the domestic producers or workers who support the petition account for at least 25 percent of the total production of the domestic like product, and the requirements of section 732(c)(4)(A)(i) of the Act are met. Furthermore, the domestic producers or workers who support the petition account for more than 50 percent of the production of the domestic like product produced by that portion of the industry expressing support for or opposition to the petition. Thus, the requirements of section 732(c)(4)(A)(ii) of the Act also are met. Finally, because the petition has established industry support representing over 50 percent of total production of the domestic like product, industry polling is unnecessary. Accordingly, the Department determines that the petition was filed on behalf of the domestic industry within the meaning of section 732(b)(1) of the Act. See also Office of AD/CVD Enforcement Initiation Checklist (Initiation Checklist), Attachment I, Industry Support section, dated December 22, 2003, on file in the Central Records Unit, Room B–099 of the main Department of Commerce building.

Export Price and Normal Value

The following is a description of the allegation of sales at LTFV upon which the Department based its decision to initiate this investigation. The sources of data used to derive the deductions and adjustments relating to U.S. price and normal value (NV) are discussed in greater detail in the Initiation Checklist. Should the need arise to use any of this information as facts available under section 776 of the Act in our preliminary or final determination, we may re-examine the information and revise the margin calculations, if appropriate.

Export Price

The petitioner alleged that the ready-to-cook Kosher chicken and parts thereof produced in Canada by Chai Poultry Inc. (Chai Poultry) and Marvid Poultry Inc. (Marvid) was sold to U.S. distributors prior to importation of the merchandise into the United States. Therefore, the petitioner based U.S. price on export price (EP). The petitioner based EP for ready-to-cook Kosher chicken and parts thereof on price quotes provided to U.S. distributors by Chai Poultry for whole ready-to-cook Kosher chicken, Kosher chicken legs, and boneless skinless Kosher chicken breasts, reduced by estimated freight charges.

[1] *See USEC, Inc.* v. *United States*, 132 F. Supp. 2d 1, 8 (Ct. Int'l Trade 2001), *citing Algoma Steel Corp. Ltd.* v. *United States*, 688 F. Supp. 639, 642–44 (Ct. Int'l Trade 1988) (''the ITC does not look behind ITA's determination, but accepts ITA's determination as to which merchandise is in the class of merchandise sold at LTFV'').

Normal Value

The petitioner based NV on prices reflected in three invoices that Chai Poultry issued to a Canadian distributor during the POI. These invoices are for sales of whole Kosher chicken, Kosher chicken legs, and boneless skinless Kosher chicken breasts. The petitioner adjusted the invoice prices for movement charges in the home market and differences in the costs incurred to pack merchandise for sale in the U.S. and home markets.

The estimated dumping margins in the petition, based on a comparison between EP and NV, range from 33.33 percent to 39.54 percent.

Fair Value Comparisons

Based on the data provided by the petitioner, there is reason to believe that imports of ready-to-cook Kosher chicken and parts thereof from Canada are being, or are likely to be, sold at LTFV.

Allegations and Evidence of Material Injury and Causation

The petitioner alleges that the U.S. industry producing the domestic like product is being materially injured, or is threatened with material injury, by reason of imports from Canada of the subject merchandise sold at less than NV.

The petitioner contends that the industry's injured condition is evident in the sales volume and market share lost to unfair imports, as well as in the rapidly declining and depressed U.S. prices. The allegations of injury and causation are supported by relevant evidence including U.S. import data, lost sales, and pricing information. We have assessed the allegations and supporting evidence regarding material injury and causation, and we have determined that these allegations are properly supported by adequate evidence and meet the statutory requirements for initiation. See the Initiation Checklist, Attachment II.

Initiation of Antidumping Investigation

Based upon our examination of the petition on ready-to-cook Kosher chicken and parts thereof from Canada, we find that it meets the requirements of section 732 of the Act. Therefore, we are initiating an antidumping investigation to determine whether imports of ready-to-cook Kosher chicken and parts thereof from Canada are being, or are likely to be, sold in the United States at LTFV. Unless the deadline is extended pursuant to section 733(b)(1)(A) of the Act, we will make our preliminary determination no later than 140 days after the date of this initiation.

Distribution of Copies of the Petition

In accordance with section 732(b)(3)(A) of the Act, a copy of the public version of the petition has been made available to the representatives of the Government of Canada. We will attempt to provide a copy of the public version of the petition to each exporter named in the petition, as provided for under 19 CFR § 351.203(c)(2).

ITC Notification

We will notify the ITC of our initiation as required by section 732(d) of the Act.

Preliminary Determination by the ITC

The ITC will preliminarily determine no later than January 15, 2004, whether there is a reasonable indication that imports of ready-to-cook Kosher chicken and parts thereof from Canada are causing material injury, or threatening to cause material injury, to a U.S. industry. A negative ITC determination will result in the investigation being terminated; otherwise, this investigation will proceed according to statutory and regulatory time limits.

This notice is issued and published pursuant to section 777(i) of the Act.

Dated: December 22, 2003.

Holly A. Kuga,

Acting Assistant Secretary for Import Administration.

[FR Doc. 03–32228 Filed 12–30–03; 8:45 am]

BILLING CODE 3510–DS–P

DEPARTMENT OF COMMERCE

International Trade Administration

[A–469–807]

Stainless Steel Wire Rod From Spain: Rescission of Antidumping Duty Administrative Review

AGENCY: Import Administration, International Trade Administration, Department of Commerce.

ACTION: Notice of rescission of antidumping duty administrative review.

EFFECTIVE DATE: December 31, 2003.

FOR FURTHER INFORMATION CONTACT: John Conniff or Timothy Finn, AD/CVD Enforcement, Office 4, Group II, Import Administration, International Trade Administration, U.S. Department of Commerce, 14th Street and Constitution Avenue, NW., Washington, DC 20230, telephone (202) 482–1009 and (202) 482–0065, respectively.

SUPPLEMENTARY INFORMATION:

Background

On September 2, 2003, the Department of Commerce (the Department) published a notice of opportunity to request an administrative review of the antidumping duty order on stainless steel wire rod (SSWR) from Spain. *See Antidumping or Countervailing Duty Order, Finding, or Suspended Investigation; Opportunity To Request Administrative Review*, (68 FR 52181).

Pursuant to a request made by Carpenter Technology Corp. (the petitioner), on November 18, 2003, the Department initiated an administrative review of the antidumping duty order on SSWR from Spain for the period September 1, 2002, through August 31, 2003. *See Initiation of Antidumping and Countervailing Duty Administrative Reviews*, 68 FR 66799 (November 28, 2003).

On December 8, 2003, the petitioner withdrew its request for the administrative review of the order on SSWR from Spain.

Rescission of Review

Pursuant to 19 CFR 351.213(d)(1), the Department will rescind an administrative review if a party that requested the review withdraws its request within 90 days of the date on which the notice announcing the initiation of the requested review was published. The Department is rescinding the administrative review of the order on SSWR from Spain for the period September 1, 2002, through August 31, 2003, because the petitioner withdrew its request for this administrative review within the 90-day time limit and no other interested parties requested a review of the order on SSWR from Spain for the period September 1, 2002, through August 31, 2003.

This notice is in accordance with section 777(i)(1) of the Act and 19 CFR 351.213(d)(4).

Dated: December 24, 2003.

Holly A. Kuga,

Acting Deputy Assistant Secretary, Group II for Import Administration.

[FR Doc. 03–32230 Filed 12–30–03; 8:45 am]

BILLING CODE 3510–DS–P

DEPARTMENT OF COMMERCE

International Trade Administration

[A-570–601]

Tapered Roller Bearings and Parts Thereof, Finished and Unfinished, From the People's Republic of China: Amended Final Results of 2001–2002 Administrative Review

AGENCY: Import Administration, International Trade Administration, Department of Commerce.

ACTION: Notice of Amended Final Results of 2000–2001 Administrative Review.

SUMMARY: On December 12, 2003, the Department of Commerce announced the final results of the administrative review of the antidumping duty order on tapered roller bearings and parts thereof, finished and unfinished, from the People's Republic of China for the period June 1, 2001, through May 31, 2002. These final results were published in the Federal Register on December 18, 2003.

On December 15, 2003, Yantai Timken Company Limited filed an allegation of ministerial error. Based on this allegation, we made changes to the margin calculation of Yantai Timken Company Limited. The final weighted-average dumping margin for this company is listed below in the section entitled ''Amended Final Results.''

EFFECTIVE DATE: December 31, 2003.

FOR FURTHER INFORMATION CONTACT: S. Anthony Grasso or Andrew Smith, Group 1, Office I, Antidumping/Countervailing Duty Enforcement, Import Administration, International Trade Administration, U.S. Department of Commerce, 14th Street and Constitution Avenue NW, Washington, DC 20230; telephone (202) 482–3853 and (202) 482–1276, respectively.

SUPPLEMENTARY INFORMATION:

Background

On December 18, 2003, the Department of Commerce (''the Department'') published the final results in this administrative review. *See Tapered Roller Bearings and Parts Thereof, Finished and Unfinished, from the People's Republic of China: Final Results of 2001–2002 Administrative Review and Partial Rescission of Review*, 68 FR 70488 (December 18, 2003) (''*Final Results*''). The period of review is June 1, 2001, through May 31, 2002.

On December 15, 2003, we received a ministerial error allegation, timely filed pursuant to 19 CFR 351.224(c)(2), from Yantai Timken Company Limited (''Yantai Timken'') regarding the Department's final margin calculation. Yantai Timken requested that we correct the error and publish a notice of amended final results in the **Federal Register**, pursuant to 19 CFR 351.224(e).

Scope of Review

Merchandise covered by this review includes tapered roller bearings and parts thereof, finished and unfinished, from the People's Republic of China (''PRC''); flange, take up cartridge, and hanger units incorporating tapered roller bearings; and tapered roller housings (except pillow blocks) incorporating tapered rollers, with or without spindles, whether or not for automotive use. This merchandise is currently classifiable under the *Harmonized Tariff Schedule of the United States* (''HTSUS'') item numbers 8482.20.00, 8482.91.00.50, 8482.99.30, 8483.20.40, 8483.20.80, 8483.30.80, 8483.90.20, 8483.90.30, 8483.90.80, 8708.99.80.15, and 8708.99.80.80. Although the HTSUS item numbers are provided for convenience and customs purposes, the written description of the scope of the order and this review is dispositive.

Amended Final Results

In its ministerial allegation, Yantai Timken claimed that the Department failed to multiply the surrogate value per kilogram used for the finished product purchased by Yantai Timken by the weight of that finished product to calculate a part-specific value for the *Final Results*. After analyzing the record of this review, we have determined, in accordance with section 771(h) of the Tariff Act of 1930, as amended, (''the Act'') and 19 CFR 351.224, that we made a ministerial error in the margin calculation for Yantai Timken. For a detailed discussion of the ministerial error allegation and the Department's analysis, *see* December 22, 2003 memorandum from team to Susan H. Kuhbach entitled *Ministerial Error Allegation*, which is on file in the Department's Central Records Unit located in the main Commerce building in Room B-099.

In the course of our analysis, we also noted that in the ''Final Results of Review'' section of the *Final Results*, we inadvertently stated that ''{w}e determine that the following dumping margins exist for the period June 1, 2000, through May 31, 2001.'' *See Final Results*, 68 FR 70488, 70489. This should have read: ''we determine that the following dumping margins exist for the period June 1, 2001, through May 31, 2002.''

Therefore, in accordance with 19 CFR 351.224(e) we are amending the *Final Results* of tapered roller bearings from the PRC to reflect the corrections noted above. Based on these revisions, we determine that the following weighted-average dumping margins exist for the period June 1, 2001, through May 31, 2002:

Exporter/manufacturer	Revised weighted-average margin percentage
Yantai Timken-Company, Ltd.	0.00
Peer Bearing Company-Changshan	0.00
PRC-wide rate	33.18

Cash Deposit Rates

The following deposit rates will be effective upon publication of these final results for all shipments of tapered roller bearings and parts thereof, finished and unfinished, from the PRC entered, or withdrawn from warehouse, for consumption on or after the publication date of this notice, as provided for by section 751(a)(1) of the Act: (1) for Yantai Timken Company Limited and Peer Bearing Company-Changshan, which have separate rates, no antidumping duty deposit will be required; (2) for a company previously found to be entitled to a separate rate and for which no review was requested, the cash deposit rate will be the rate established in the most recent review of that company; (3) for all other PRC exporters the case deposit rate will be the PRC-country wide rate, which is 33.18 percent; and (4) for non-PRC exporters of subject merchandise from the PRC, the cash deposit rate will be the rate applicable to the PRC supplier of that exporter. These deposit rates shall remain in effect until publication of the final results of the next administrative review.

These cash deposit requirements, when imposed, shall remain in effect until publication of the final results of the next administrative review.

Assessment Rates

The Department will issue appropriate assessment instructions directly to the Bureau of Customs and Border Protection within 15 days of publication of these amended final results of review.

This determination is issued and published in accordance with sections 751(a)(1) and 777(i) of the Act.

Dated: December 23, 2003.

Holly A. Kuga,

Acting Assistant Secretary for Import Administration.

[FR Doc. 03–32227 Filed 12–30–03; 8:45 am]

BILLING CODE 3510–DS–S

DEPARTMENT OF COMMERCE

International Trade Administration

[C–122–848]

Hard Red Spring Wheat From Canada: Initiation of Expedited Review of the Countervailing Duty Order

AGENCY: Import Administration, International Trade Administration, Department of Commerce.

ACTION: Notice of initiation of expedited review of the countervailing duty order: Hard Red Spring Wheat from Canada.

SUMMARY: On November 18, 2003, the Department of Commerce received a request to conduct an expedited review of the countervailing duty order on hard red spring wheat from Canada. In accordance with 19 CFR 351.214(k), we are initiating this review.

EFFECTIVE DATE: December 31, 2003.

FOR FURTHER INFORMATION CONTACT: Daniel J. Alexy or Stephen Cho, Office of Antidumping/Countervailing Duty Enforcement, Group 1, Import Administration, U.S. Department of Commerce, Room 3099, 14th Street and Constitution Avenue, NW., Washington, DC 20230; telephone (202) 482–1540 and (202) 482–3798, respectively.

SUPPLEMENTARY INFORMATION:

Background

On November 18, 2003, the Department of Commerce (the ''Department'') received a request from Richelain Farms (''Richelain'') to conduct an expedited review of the countervailing duty order on hard red spring wheat from Canada, issued October 23, 2003 (68 FR 60642). Richelain, a company that was not selected for individual examination during the investigation, made this request pursuant to 19 CFR 351.214(k).

Initiation of Expedited Review

In accordance with 19 CFR 351.214(k)(1)(i)–(iii), Richelain certified that it exported the subject merchandise to the United States during the period of investigation; that it is not affiliated with an exporter or producer that the Department individually examined in the investigation; and that it informed the Government of Canada, as the government of the exporting country, that the government will be required to provide a full response to the Department's questionnaire.

Therefore, in accordance with 19 CFR 351.214(k), we are initiating an expedited review of the countervailing duty order on hard red spring wheat from Canada. Pursuant to 19 CFR 351.214(k)(3), we intend to issue the preliminary results of this expedited review not later than 180 days from the date of initiation of this review. As specified by 19 CFR 351.214(k)(3)(i), the period of review will be based on the same period of time as the investigation, *i.e.*, August 1, 2001, through July 31, 2002.

This expedited review is intended to provide an individual cash deposit rate or exclusion to Richelain. The final results of this expedited review will not be the basis for the assessment of countervailing duties.

Interested parties must submit applications for disclosure under administrative protective orders in accordance with 19 CFR 351.305 and 351.306.

Dated: December 23, 2003.

Holly A. Kuga,

Acting Assistant Secretary for Import Administration.

[FR Doc. 03–32229 Filed 12–30–03; 8:45 am]

BILLING CODE 3510–DS–P

DEPARTMENT OF COMMERCE

International Trade Administration

Notice of Determination with Respect to Modification of Tariff Rate Quotas on the Import of Certain Worsted Wool Fabrics

AGENCY: Department of Commerce, International Trade Administration.

ACTION: The Department has determined that no modification be made to the 2004 tariff rate quotas.

SUMMARY: The Department of Commerce has determined that the 2004 limitation on the quantity of imports of worsted wool fabrics that may be imported under the tariff rate quotas established by the Trade and Development Act of 2000 (TDA 2000) as amended by the Trade Act of 2002 should not be modified.

FOR FURTHER INFORMATION CONTACT: Sergio Botero, Office of Textiles and Apparel, U.S. Department of Commerce, (202) 482-4058.

SUPPLEMENTARY INFORMATION:

Background

Title V of the TDA 2000 created two tariff rate quotas (TRQs), providing for temporary reductions for three years in the import duties on limited quantities of two categories of worsted wool fabrics suitable for use in making suits, suit-type jackets, or trousers: (1) for worsted wool fabric with average fiber diameters greater than 18.5 microns (Harmonized Tariff Schedule of the United States (HTS) heading 9902.51.11); and (2) for worsted wool fabric with average fiber diameters of 18.5 microns or less (HTS heading 9902.51.12).

On August 6, 2002, President Bush signed into law the Trade Act of 2002, which includes several amendments to Title V of the TDA 2000. These include the extension of the program through 2005; the reduction of the in-quota duty rate on HTS 9902.51.12 (average fiber diameter 18.5 microns or less) from 6 percent to zero, effective for goods entered, or withdrawn from warehouse for consumption, on or after January 1, 2002; and an increase in the 2003 through 2005 TRQ levels to 3,500,000 square meters for HTS 9902.51.12 and to 4,500,000 square meters for HTS 9902.51.11. Both of these limitations may be modified by the President, not to exceed 1,000,000 square meters per year for each tariff rate quota.

The TDA 2000 requires the annual consideration of requests by U.S. manufacturers of men's or boys' worsted wool suits, suit-type jackets and trousers for modification of the limitation on the quantity of fabric that may be imported under the tariff rate quotas, and grants the President the authority to proclaim modifications to the limitations. In determining whether to modify the limitations, specified U.S. market conditions with respect to worsted wool fabric and worsted wool apparel must be considered.

On January 22, 2001, the Department published regulations establishing procedures for considering requests for modification of the limitations (15 CFR 340) in the **Federal Register**. (See 66 FR 6459.) The regulations provide that not more than 30 days following the close of the comment period, the Department will determine whether the limitations on the quantity of imports under the tariff rate quotas should be modified and recommend to the President that appropriate modifications be made.

On September 26, 2003, the Department published a notice in the **Federal Register** soliciting requests for modification of the 2004 tariff rate quota limitations. (See 68 FR 55591.) The Department received one such request, from Hartmarx Corporation. The request is for the maximum increase (1,000,000 square meters) in each of the two tariff rate quota limitations (HTS 9902.51.11 and HTS 9902.51.12).

On November 4, 2003, the Department solicited comments on the request for a period of 20 days. (See 68 FR 62432.) The Department received comments from seven companies/trade associations. One of the respondents, Southwick Clothing LLC, supported the request for modification, and six of the respondents, Burlington Industries, Cleyn & Tinker, the National Textile Association, Victor Forstmann, Inc., Warren of Stafford, and the Association of Georgia's Textile, Carpet, and Consumer Products Manufacturers, opposed the request for modification.

After reviewing the request, the comments received, and other information obtained, including a report prepared by the U.S. International Trade Commission, and after considering the specific market conditions set forth in the TDA 2000, the Department determined that the 2004 limitations on the quantity of imports of worsted wool fabrics that may be imported subject to the tariff rate quotas established by the TDA 2000 as amended by the Trade Act of 2002 should not be modified.

Dated: December 24, 2003.

D. Michael Hutchinson,

Acting Deputy Assistant Secretary for Textiles, Apparel and Consumer Goods Industries

[FR Doc. 03–32163 Filed 12–30–03; 8:45 am]

BILLING CODE 3510–DR–S

DEPARTMENT OF COMMERCE

National Oceanic and Atmospheric Administration

Availability of Seats for the Hawaiian Islands Humpback Whale National Marine Sanctuary Advisory Council

AGENCY: National Marine Sanctuary Program (NMSP), National Ocean Service (NOS), National Oceanic and Atmospheric Administration (NOAA), Department of Commerce (DOC).

ACTION: This notice is to extend the previous notice and request for applications that was posted on November 15, 2003.

SUMMARY: The Hawaiian Islands Humpback Whale National Marine Sanctuary (HIHWNMS) is seeking applicants for the following vacant seats on its Sanctuary Advisory Council (Council): Maui County Alternate, Kaua'i County Alternate, Education Alternate, Fishing Alternate, Native Hawaiian Member, and Native Hawaiian Alternate. Applicants are chosen based upon their particular expertise and experience in relation to the seat for which they are applying; community and professional affiliations; philosophy regarding the protection and management of marine resources; and possibly the length of residence in Hawaii. Applicants who are chosen as members should expect to serve two-year terms, pursuant to the Council's Charter.

DATES: January 5, 2004.

ADDRESSES: Application kits may be obtained from Keeley Belva (888) 55–WHALE or via e-mail at: *Keeley.Belva@noaa.gov.* Applications are also available online at *http://hawaiihumpbackwhale.noaa.gov.* Completed applications should be mailed to the Hawaiian Islands Humpback Whale National Marine Sanctuary, 6700 Kalaniana'ole Highway, Suite 104, Honolulu, Hawaii 96825, faxed to (808) 397–2650, or returned via e-mail.

FOR FURTHER INFORMATION CONTACT: Keeley Belva (see above for contact information).

Authority: 16 U.S.C. 1431 *et seq.*

(Federal Domestic Assistance Catalog Number 11.429 Marine Sanctuary Program)

Dated: December 19, 2003.

Richard W. Spinrad,

Assistant Administrator, Ocean Services and Coastal Zone Management, National Oceanic and Atmospheric Administration.

[FR Doc. 03–32138 Filed 12–30–03; 8:45 am]

BILLING CODE 3510–NK–M

DEPARTMENT OF COMMERCE

National Oceanic and Atmospheric Administration

[I.D. 122303C]

Pacific Fishery Management Council; Public Meeting

AGENCY: National Marine Fisheries Service (NMFS), National Oceanic and Atmospheric Administration (NOAA), Commerce.

ACTION: Notice of public meeting.

SUMMARY: The Pacific Fishery Management Council's (Council) Groundfish Management Team (GMT) will hold a work planning session which is open to the public.

DATES: The meeting will be held on Wednesday, January 14, 2004 is scheduled as a full day training opportunity for GMT members beginning at 8 a.m. The GMT session will reconvene from 8 a.m. to 5 p.m. Thursday, January 15 and 8 a.m. through noon Friday, January 16, 2004.

ADDRESSES: The meeting will be held at the Scipps Institution of Oceanography Campus Martin Johnson House, Building T–29, 8840 Biological Grade, La Jolla, CA 92037–1508; telephone: (858) 534–2102.

Council address: Pacific Fishery Management Council, 7700 NE Ambassador Place, Suite 200, Portland, OR 97220–1384.

FOR FURTHER INFORMATION CONTACT: Mr. John DeVore, Groundfish Staff Officer; telephone: (503) 820–2280.

SUPPLEMENTARY INFORMATION: The primary goal of the work planning exercise is to identify team members who will be responsible for the requisite GMT work products for development of the 2005–06 management measures. Harvest specifications and management measures for 2005–06 will not be discussed at this meeting. The GMT will consider the 2005–06 management measures at a subsequent public meeting tentatively scheduled for February, 2004.

Although non-emergency issues not contained in this agenda may come before the GMT for discussion, those issues may not be the subject of formal GMT action during this meeting. GMT action will be restricted to those issues specifically listed in this notice and any issues arising after publication of this notice that require emergency action under Section 305(c) of the Magnuson-Stevens Fishery Conservation and Management Act, provided the public has been notified of the GMT's intent to take final action to address the emergency.

Special Accommodations

The meeting is physically accessible to people with disabilities. Requests for sign language interpretation or other auxiliary aids should be directed to Ms. Carolyn Porter at (503) 820–2280 at least 5 days prior to the meeting date.

Dated: December 23, 2003.

Richard W. Surdi,

Acting Director, Office of Sustainable Fisheries, National Marine Fisheries Service.

[FR Doc. E3–00663 Filed 12–30–03; 8:45 am]

BILLING CODE 3510–22–S

DEPARTMENT OF COMMERCE

National Oceanic and Atmospheric Administration

[I.D. 122303B]

South Atlantic Fishery Management Council; Public Meeting

AGENCY: National Marine Fisheries Service (NMFS), National Oceanic and Atmospheric Administration (NOAA), Commerce.

ACTION: Notice of the South Atlantic; Southeastern Data, Assessment, and Review (SEDAR) Workshop for Goliath grouper and hogfish.

SUMMARY: The SEDAR process for stock assessments consists of a series of three workshops, a Data Review Workshop, an Assessment Workshop, and a Review Workshop. As part of this series, an Assessment Workshop is being held for Goliath grouper and hogfish.

DATES: The workshop will take place January 27–30, 2004. The workshop will be held on January 27, 2004, 2 p.m.–5:30 p.m.; January 28–29, 2004, 8:30 a.m.–5:30 p.m.; January 30, 8:30 a.m.–3 p.m.

ADDRESSES: The workshop will be held at the Hilton Tampa Airport Westshore, 2225 North Lois Avenue, Tampa, FL 33607; telephone: (813) 877–6688.

Council address: South Atlantic Fishery Management Council, One Southpark Circle, Suite 306, Charleston, SC 29407.

FOR FURTHER INFORMATION CONTACT: Kim Iverson, Public Information Officer; telephone: (843) 571–4366 or toll free (866) SAFMC–10; fax: (843) 769–4520.

SUPPLEMENTARY INFORMATION: The South Atlantic Fishery Management Council, in conjunction with NOAA Fisheries, has implemented the SEDAR process, a multi-step method for determining the status of fish stocks. SEDAR includes three workshops: (1) Data Workshop, (2) Stock Assessment Workshop and (3) the Review Workshop. The product of the Data Workshop and the Stock Assessment Workshop is a stock assessment report. This report is then peer reviewed at the Review Workshop and a final consensus report and advisory report is prepared that includes strengths and weaknesses in the stock assessment and recommendations to fishery managers for future data and research needs. The process includes data collectors, biologists, fishermen, environmental representatives, database managers, stock assessment scientists and Council members and staff.

SEDAR 6 consists only of a Review Workshop for Goliath grouper and hogfish. This deviation from the standard SEDAR process was recommended by the SEDAR Steering Committee to address an immediate need to review these two assessments for upcoming amendments to the Snapper/Grouper Fishery Management Plan. The hogfish stock assessment was prepared by the University of Miami under contract to the state of Florida and initiated before the SEDAR process existed. The State has requested that an Assessment Review be conducted prior to accepting the stock assessment. Goliath grouper was reviewed in a prior SEDAR Data Workshop (SEDAR 3) but not assessed during the Assessment Workshop. Upon consideration at the SEDAR 3 Review Workshop, the panel indicated that an assessment could be conducted. The National Marine Fisheries Service (NOAA Fisheries) conducted the assessment as instructed and has submitted it for review.

The Review Workshop involves a peer review of the report created from the earlier two workshops.

Although non-emergency issues not contained in this agenda may come before this group for discussion, those issues may not be the subject of formal action during this meeting. Action will be restricted to those issues specifically identified in this notice and any issues arising after publication of this notice that require emergency action under section 305(c) of the Magnuson-Stevens Fishery Conservation and Management Act, provided the public has been notified of the Council's intent to take final action to address the emergency.

Special Accommodations

These meetings are physically accessible to people with disabilities. Requests for sign language interpretation or other auxiliary aids should be directed to the Council office (see **ADDRESSES**) at least 5 business days prior to the workshop.

Dated: December 23, 2003.

Richard W. Surdi,

Acting Director, Office of Sustainable Fisheries, National Marine Fisheries Service.

[FR Doc. E3–00661 Filed 12–30–03; 8:45 am]

BILLING CODE 3510–22–S

DEPARTMENT OF COMMERCE

National Oceanic and Atmospheric Administration

Notice of Indirect Cost Rates for the National Marine Sanctuary Program

AGENCY: National Oceanic and Atmospheric Administration (NOAA), DOC.

ACTION: Notice.

SUMMARY: NOAA's National Marine Sanctuary Program (NMSP) is announcing the establishment of indirect cost rates and a policy on the recovery of indirect costs for its involvement in natural resource damage assessment and restoration activities. These rates and the NMSP policy will be applied to all damage assessment and restoration case costs as of October 1, 2001, for cases not settled prior to that date. More information on these rates and the NMSP policy can be obtained from the address provided below.

EFFECTIVE DATE: October 1, 2001.

FOR FURTHER INFORMATION CONTACT: Harriet Sopher, 301–713–3125, ext. 109; (Fax: 301–713–0404; e-mail: *Harriet.Sopher@noaa.gov.*

SUPPLEMENTARY INFORMATION: The mission of the NMSP under the National Marine Sanctuaries Act (NMSA) (16 U.S.C. 1431 *et seq.*) is to manage and protect specifically designated areas of the nation's oceans and Great Lakes for their habitats, ecological value, threatened and endangered species, and historical archaeological, recreational and esthetic resources. The NOAA NMSP is part of the National Ocean Service, and consists of a system of individual sanctuary sites (13 at present) and a headquarters office.

The NMSP has the mandate to restore sanctuary resources injured as the result of physical harm (section 312, NMSA), or caused by releases of hazardous substances or oil (Comprehensive Environmental Response, Compensation, and Liability Act (CERCLA), 42 U.S.C. 9601 *et seq.* and Oil Pollution Act of 1990 (OPA), 33 U.S.C. 2701 *et seq.*) The NMSP conducts Natural Resource Damage Assessments (NRDAs) as a basis for recovering damages from responsible parties and uses the funds recovered to restore injured sanctuary resources and to reimburse the NMSP for assessment costs incurred.

NOAA has promulgated natural resource damage regulations under the Oil Pollution Act (OPA), 33 U.S.C. 2701 *et seq.* While oriented towards claims arising under OPA, the regulations provide guidance to NOAA in developing natural resource damage claims under a variety of statutes including the NMSA. The OPA regulations define the scope of the costs of the damage assessment and specifically allow for the inclusion of indirect costs provided, however, that those costs are developed according to generally acceptable accounting practices. Specifically, the regulations state that ''both direct and indirect costs contribute to the full cost of the assessment and restoration * * *'' and are defined to mean ''expenses that are jointly or commonly incurred to produce two or more products or services * * *. Indirect costs are not specifically identifiable with any of the products or services, but are necessary for the organization to function and produce the products or services. An indirect cost rate, developed in

accordance with generally accepted accounting principles, may be used to allocate indirect costs to specific assessment and restoration activities.'' 15 CFR 990.30.

Accordingly, the NMSP includes both direct and indirect costs in damage assessment claims it presents to responsible parties. Direct costs are costs for activities that are clearly and readily attributable to a specific output. Outputs may be associated with on-scene emergency response as well as the damage assessment. In contrast, indirect costs reflect the costs for activities that collectively support the NMSP's damage assessment, restoration, and emergency response capabilities. For example, indirect costs include general administrative support and traditional overheads. Although these costs may not be readily traced back to a specific direct activity, indirect costs may be allocated to direct activities using an indirect cost distribution rate.

Consistent with Federal accounting requirements, the NMSP is required to account for and report the full costs of its programs and activities. Further, the NMSP is authorized by law to recover reasonable costs of damage assessment and restoration activities under the NMSA, CERCLA, and OPA. Within the constraints of these legal provisions and their regulatory applications, the NMSP has the discretion to develop indirect cost rates for its components and formulate policies on the recovery of indirect cost rates subject to its requirements.

The NMSP's Indirect Cost Effort

In October 2002, the NMSP hired the public accounting firm of Cotton & Company (C&C) to: (1) Evaluate the cost accounting system and allocation practices; (2) recommend the appropriate indirect cost allocation methodology; and, (3) determine the indirect cost rates for the components of the NMSP. The NMSP requested an analysis of its indirect costs for fiscal year 2002. The goal was to develop the most appropriate indirect cost rate allocation methodology and rates for the NMSP components.

C&C concluded that the cost accounting system and allocation practices of the NMSP are consistent with Federal accounting requirements. C&C also determined that the most appropriate indirect allocation method was the Direct Labor Cost Base for all NMSP components. The Direct Labor Cost Base is computed by allocating total indirect costs over the sum of direct labor dollars plus the application of NOAA's leave surcharge and benefits rates to direct labor. The indirect cost rates that C&C has computed for the NMSP were further assessed as being fair and equitable. A report on C&C's effort, their assessment of the NMSP's cost accounting system and practices, and their determination respecting the most appropriate indirect cost methodology and rates can be obtained from Michelle Chapman, 1305 East West Highway, Silver Spring, MD 20910, *michelle.chapman@noaa.gov.*

The NMSP's Indirect Cost Policy

The NMSP will include the costs of program policy work and techniques and methods development in indirect cost pools of its component organizations, but will monitor these activities annually to control costs. The indirect cost pools also include the cost of general management and administrative support and preparedness for emergency response work.

The NMSP will apply the rates recommended by C&C for fiscal year 2002 for each of the NMSP components as provided below:

Headquarters and all sanctuary field sites except as specified: 154.62%,
Florida Keys National Marine Sanctuary: 249.41%

Different components of the NMSP have different rates because of their different roles and responsibilities with respect to damage assessment and restoration. The Headquarters staff serves a coordinating function, providing overall policy direction and administrative support. Individual sanctuary sites support policy development, but also conduct techniques development and perform the field operational role, providing on-the-water emergency response and biological assessment of the injuries and conducting or overseeing restoration efforts. A separate rate was calculated for the Florida Keys National Marine Sanctuary (FKNMS) because the vast majority of incidents occur at that site. The FKNMS maintains an entire team of emergency response, damage assessment and restoration personnel, equipped and trained for their field operational role.

The rates identified in this policy will be applied to all damage assessment and restoration case costs as of October 1, 2001, using the Direct Labor Cost base allocation methodology. For cases that have settled and for cost claims paid prior to October 1, 2001, the NMSP will not reopen any resolved matters for the purpose of applying the rates in this policy. For cases not settled and cost claims not paid prior to October 1, 2001, costs will be recalculated using the rates in this policy. The NMSP will use the FY 2002 rates for future fiscal years until year-specific rates can be developed.

Alan Neuschatz,

Associate Assistant Administrator for Management, Ocean Services and Coastal Zone Management, National Oceanic and Atmospheric Administration.

[FR Doc. 03–32137 Filed 12–30–03; 8:45 am]

BILLING CODE 3510–NK–M

DEPARTMENT OF COMMERCE

National Oceanic and Atmospheric Administration

[I.D 110403A]

Endangered Species; File No. 1418

AGENCY: National Marine Fisheries Service (NMFS), National Oceanic and Atmospheric Administration (NOAA), Commerce.

ACTION: Issuance of permit.

SUMMARY: Notice is hereby given that Lawrence D. Wood, Marinelife Center of Juno Beach, 14200 U.S. Hwy. #1, Juno Beach, FL, 33408, has been issued a permit to take hawksbill sea turtles (*Eretmochelys imbricata*) for purposes of scientific research.

ADDRESSES: The permit and related documents are available for review upon written request or by appointment in the following offices:

Permits, Conservation and Education Division, Office of Protected Resources, NMFS, 1315 East-West Highway, Room 13705, Silver Spring, MD 20910; phone (301)713–2289; fax (301)713–0376;

Southeast Region, NMFS, 9721 Executive Center Drive North, St. Petersburg, FL 33702–2432; phone (727)570–5301; fax (727)570–5320.

FOR FURTHER INFORMATION CONTACT: Patrick Opay, (301) 713–1401 or Carrie Hubard, (301)713–2289.

SUPPLEMENTARY INFORMATION: On May 20, 2003, notice was published in the **Federal Register** (68 FR 27535) that a request for a scientific research permit to take hawksbill sea turtles had been submitted by the above-named individual. The requested permit has been issued under the authority of the Endangered Species Act of 1973, as amended (ESA; 16 U.S.C. 1531 *et seq.*) and the regulations governing the taking, importing, and exporting of endangered and threatened species (50 CFR parts 222–226).

The applicant will hand capture, handle, measure, Passive Integrated Transponder (PIT) and flipper tag, photograph, tissue sample, paint a

number on the carapace of, and release up to 75 hawksbill sea turtles annually. Only 6 turtles will be initially marked with the painted number to test the efficacy of the this procedure, and future decisions concerning the value and use of this technique will be based on the results. The purpose of the research is to determine the abundance, distribution and movement patterns of this species. It will also provide growth rate information about these turtles and the researcher will determine the feasibility of photographic identification through unique individual characteristics. The permit duration is 5 years.

Issuance of this permit, as required by the ESA, was based on a finding that such permit (1) was applied for in good faith, (2) will not operate to the disadvantage of the endangered species which is the subject of this permit, and (3) is consistent with the purposes and policies set forth in section 2 of the ESA.

Dated: December 23, 2003.

Tammy C. Adams,

Acting Chief, Permits, Conservation and Education Division, Office of Protected Resources, National Marine Fisheries Service.

[FR Doc. 03–32233 Filed 12–30–03; 8:45 am]

BILLING CODE 3510–22–S

DEPARTMENT OF COMMERCE

National Oceanic and Atmospheric Administration

[I.D. 122203G]

Marine Mammals; File No. 116–1477

AGENCY: National Marine Fisheries Service (NMFS), National Oceanic and Atmospheric Administration (NOAA), Commerce.

ACTION: Issuance of permit amendment.

SUMMARY: Notice is hereby given that Sea World, Inc., 7007 Sea World Drive, Orlando, Florida 32821–8097 (Principal Investigator: Dudley Wigdahl, Sea World of Texas) has been issued an amendment to Permit No. 116–1477–01 to take Hawaiian monk seals, *Monachus schauinslandi*, for scientific research and enhancement purposes.

ADDRESSES: The amendment and related documents are available for review upon written request or by appointment in the following office(s):

Permits, Conservation and Education Division, Office of Protected Resources, NMFS, 1315 East-West Highway, Room 13705, Silver Spring, MD 20910; phone (301)713–2289; fax (301)713–0376; and

Southwest Region, NMFS, 501 West Ocean Blvd., Suite 4200, Long Beach, CA 90802–4213; phone (562)980–4001; fax (562)980–4018.

FOR FURTHER INFORMATION CONTACT: Amy Sloan or Jennifer Skidmore, (301)713–2289.

SUPPLEMENTARY INFORMATION: The requested amendment has been granted under the authority of the Marine Mammal Protection Act of 1972, as amended (16 U.S.C. 1361 *et seq.*), the provisions of § 216.39 of the Regulations Governing the Taking and Importing of Marine Mammals (50 CFR part 216), the Endangered Species Act of 1973, as amended (ESA; 16 U.S.C. 1531 *et seq.*), the provisions of § 222.306 of the regulations governing the taking, importing, and exporting of endangered and threatened species (50 CFR parts 222–226).

This amendment extends the expiration date of the permit from December 31, 2003 to December 31, 2004.

Issuance of this amendment, as required by the ESA was based on a finding that such permit: (1) Was applied for in good faith; (2) will not operate to the disadvantage of the endangered species which is the subject of this permit; and (3) is consistent with the purposes and policies set forth in section 2 of the ESA.

Dated: December 23, 2003.

Tammy C. Adams,

Acting Chief, Permits, Conservation and Education Division, Office of Protected Resources, National Marine Fisheries Service.

[FR Doc. 03–32231 Filed 12–30–03; 8:45 am]

BILLING CODE 3510–22–S

DEPARTMENT OF COMMERCE

National Oceanic and Atmospheric Administration

[I.D. 121103E]

Marine Mammals; File No. 259–1481

AGENCY: National Marine Fisheries Service (NMFS), National Oceanic and Atmospheric Administration (NOAA), Commerce.

ACTION: Issuance of permit amendment.

SUMMARY: Notice is hereby given that Ronald Schusterman, Ph.D., Long Marine Laboratory, University of California Santa Cruz, 100 Shaffer Road, Santa Cruz, California 95060 has been issued an amendment to scientific research Permit No. 259–1481–01.

ADDRESSES: The amendment and related documents are available for review upon written request or by appointment in the following office(s):

Permits, Conservation and Education Division, Office of Protected Resources, NMFS, 1315 East-West Highway, Room 13705, Silver Spring, MD 20910; phone (301)713–2289; fax (301)713–0376; and

Southwest Region, NMFS, 501 West Ocean Blvd., Suite 4200, Long Beach, CA 90802–4213; phone (562)980–4001; fax (562)980–4018.

FOR FURTHER INFORMATION CONTACT: Amy Sloan or Ruth Johnson, (301)713–2289.

SUPPLEMENTARY INFORMATION: The requested amendment has been granted under the authority of the Marine Mammal Protection Act of 1972, as amended (16 U.S.C. 1361 *et seq.*), and the Regulations Governing the Taking and Importing of Marine Mammals (50 CFR part 216).

This minor amendment extends the expiration date of the permit from December 31, 2003 to December 31, 2004, and adds Co-Investigators to the permit.

Dated: December 23, 2003.

Tammy C. Adams,

Acting Chief, Permits, Conservation and Education Division, Office of Protected Resources, National Marine Fisheries Service.

[FR Doc. 03–32232 Filed 12–30–03; 8:45 am]

BILLING CODE 3510–22–S

DEPARTMENT OF COMMERCE

National Oceanic and Atmospheric Administration

[I.D. 121003A]

Marine Mammals; File No. 821–1588–02

AGENCY: National Marine Fisheries Service (NMFS), National Oceanic and Atmospheric Administration (NOAA), Commerce.

ACTION: Issuance of permit amendment.

SUMMARY: Notice is hereby given that the Texas A&M University, Department of Marine Biology, P.O. Box 1675, Galveston, Texas 77551 (Principal Investigator: Dr. Randall W. Davis) has been issued an amendment to scientific research Permit No. 82–1588–01.

ADDRESSES: The amendment and related documents are available for review upon written request or by appointment in the following office(s):

Permits, Conservation and Education Division, Office of Protected Resources, NMFS, 1315 East-West Highway, Room 13705, Silver Spring, MD 20910; phone (301)713–2289; fax (301)713–0376;

Southwest Region, NMFS, 501 West Ocean Blvd., Suite 4200, Long Beach, CA 90802–4213; phone (562)980–4001; fax (562)980–4018; and

Southeast Region, NMFS, 9721 Executive Center Drive North, St.

Petersburg, FL 33702–2432; phone (727)570–5301; fax (727)570–5320.

FOR FURTHER INFORMATION CONTACT: Ruth Johnson or Amy Sloan at (301)713–2289) or email: firstname.lastname@noaa.gov.

SUPPLEMENTARY INFORMATION: On November 19, 2002, notice was published in the **Federal Register** (67 FR 69725) that an amendment of Permit No. 821–1588–00 issued June 18, 2001 (66 FR 33237), had been requested by the above-named organization. The requested amendment has been granted under the authority of the Marine Mammal Protection Act of 1972, as amended (16 U.S.C. 1361 *et seq.*), the Regulations Governing the Taking and Importing of Marine Mammals (50 CFR part 216).

The Permit authorizes the take of northern elephant seals (*Mirounga angustirostris*) for the purposes of scientific research. This study will investigate the behavioral and energetic adaptations that enable elephant seals to forage at depth in the north Pacific Ocean. Animals will be captured on Ano Nuevo.

Dated: December 23, 2003.

Stephen L. Leathery,

Chief, Permits, Conservation and Education Division, Office of Protected Resources, National Marine Fisheries Service.

[FR Doc. 03–32234 Filed 12–30–03; 8:45 am]

BILLING CODE 3510–22–S

DEPARTMENT OF COMMERCE

National Telecommunications and Information Administration

Proposed Information Collection; Comment Request; NTIA/FCC Web-Coordination Collection

ACTION: Notice.

SUMMARY: The U.S. Department of Commerce (DOC), as part of its continuing effort to reduce paperwork and respondent burden, invites the general public and other Federal agencies to comment on the proposed information collection, as required by the Paperwork Reduction Act of 1995, Pub. L. 104–13 (44 U.S.C. 3506(c)(2)(A)).

DATES: Written comments must be submitted on or before March 1, 2004.

ADDRESSES: Direct all written comments to Diana Hynek, Departmental Paperwork Clearance Officer, U.S. Department of Commerce, Room 6625, 14th and Constitution Avenue NW., Washington, DC 20230 (or via the Internet at *dHynek@doc.gov).*

FOR FURTHER INFORMATION CONTACT: Requests for additional information or copies of the information collection instrument and instructions should be directed to: Michael Doolan, Electronics Engineer, Spectrum Engineering and Analysis Division, Office of Spectrum Management, National Telecommunications and Information Administration, U.S. Department of Commerce, Room 4099A, 14th and Constitution Avenue NW., Washington, DC 20230 (or via the Internet at *mdoolan@ntia.doc.gov).*

SUPPLEMENTARY INFORMATION:

I. Abstract

The National Telecommunications and Information Administration (NTIA) is developing a web-based system that will collect specific identification information (*e.g.*, company name, location and projected range of the operation, *etc.*) from applicants seeking to operate in existing and planned radio frequency (RF) bands that are shared on a co-primary basis by federal and non-federal users. The proposed web-based system will provide a means for non-federal applicants to rapidly determine the availability of RF spectrum in a specific location, or the need for detailed frequency coordination of a specific newly proposed assignment within the shared portions of the radio spectrum. The website will allow the non-federal applicant's proposed radio site information to be analyzed, and a real-time determination to be made as to whether there is a potential for interference to, or from, existing Federal government radio operations in the vicinity of the proposed site. This web-based coordination system will help expedite the coordination process for non-federal applicants while assuring protection of government data relating to national security. The information provided by non-federal applicants will also assure the protection of the applicant's station from radio frequency interference from future government operations.

Non-federal applicants will be required to submit information regarding the physical characteristics of the proposed radio station and the proposed location of operation. This information is necessary for a determination of electromagnetic compatibility among radio stations in the frequency band to be made. The name and address of the proposed licensee of the station will also be required, as currently required by the Federal Communications Commission. All data requested by the website is currently required for the coordination of non-federal radio stations in RF spectrum that is shared with the federal government.

II. Method of Collection

The application and instructions for the application will reside on NTIA's website. Non-federal applicants will submit applications electronically through the website. NTIA responses will also be provided electronically to applicants.

III. Data

OMB Number: None.

Form Numbers: None.

Type of Review: Regular submission.

Affected Public: Business or other for-profit organizations, state or local government.

Estimated Number of Respondents: 3,000.

Estimated Time Per Response: 15 minutes.

Estimated Total Annual Respondent Burden Hours: 750.

Estimated Total Annual Respondent Cost Burden: None.

Legal Authority: 47 U.S.C. 902(b)(2)(L)(ii).

IV. Request for Comments

Comments are invited on: (a) Whether the proposed collection of information is necessary for the proper performance of the functions of the agency, including whether the information will have practical utility; (b) the accuracy of the agency's estimate of the burden (including hours and cost) of the proposed collection of information; (c) ways to enhance the quality, utility, and clarity of the information to be collected; and (d) ways to minimize the burden of the collection of information on applicants, *e.g.,* the use of automated collection techniques or other forms of information technology.

Comments submitted in response to this notice will be summarized or included in the request for OMB approval of this information collection; they also will become a matter of public record.

Dated: December 24, 2003.

Gwellnar Banks,

Management Analyst, Office of the Chief Information Officer.

[FR Doc. 03–32222 Filed 12–30–03; 8:45 am]

BILLING CODE 3510–60–P

DEPARTMENT OF DEFENSE

Department of the Air Force

Notice of Intent (NOI) To Prepare an Environmental Impact Statement (EIS) for the New Mexico Training Range Initiative (NMTRI)

AGENCY: Air Combat Command, United States Air Force, DoD.

ACTION: Notice of intent.

SUMMARY: Pursuant to the National Environmental Policy Act (NEPA) of 1969, as amended (42 U.S.C. 4321, *et seq.*), the Council on Environmental Quality (CEQ) Regulations for Implementing the Procedural Provisions of NEPA (40 CFR parts 1500–1508), and Air Force policy and procedures (32 CFR part 989), the Air Force is issuing this notice to advise the public of its intent to prepare an EIS to assess the potential environmental impacts of a proposal known as the New Mexico Training Range Initiative (NMTRI).

The NMTRI proposal consists of three elements: creation and modification of training airspace, authorization for supersonic operations in Cannon Air Force Base's centrally located training airspace and use of chaff and flares in the new and modified training airspace. The purpose of the NMTRI is to provide more effective and realistic training conditions for the current airframes and munitions of the 27th FW and the New Mexico Air National Guard. In addition to the proposed action, two other alternatives and the no-action alternative, will be analyzed in the EIS.

The Air Force will conduct a series of scoping meetings to solicit public input concerning the proposal. The scoping process will help identify issues to be addressed in the environmental analysis. In addition to the comments received at the scoping meetings, written comments on the scope of the EIS will be accepted by the Air Force at the address below through Feb. 24, 2004. The Air Force will accept relevant comments at any time during the environmental analysis process.

Notices will also be made in local areas of concern. Scoping meetings will be held at the following locations:

Portales, NM, January 26, 2004, 6–8 p.m., Becky Sharpe Auditorium, Eastern New Mexico University College of Business;

Fort Sumner, NM, January 27, 2004, 6–8 p.m., Community Services Bldg., 514 Avenue C;

Vaughn, NM, January 28, 2004, 4–6 p.m., Vaughn Elementary Multi-Purpose Bldg., 101 East 4th Street;

Roswell, NM, January 29, 2004, 6–8 p.m., Goddard High School, 701 E. Country Club Rd.

Point of Contact: Please direct any written comments or requests for information to Ms. Brenda W. Cook, HQ ACC/CEVP, 129 Andrews St., Suite 102, Langley AFB, VA 23665–2769, (757) 764–9339.

Pamela Fitzgerald,

Air Force Federal Register Liaison Officer.

[FR Doc. 03–32015 Filed 12–30–03; 8:45 am]

BILLING CODE 5001–05–P

DEPARTMENT OF DEFENSE

Department of the Navy

Public Hearing for the Draft Environmental Impact Statement for Stabilization of In-Water Facilities at Fox Island Laboratory, Fox Island, Washington

AGENCY: Department of the Navy, DoD.

ACTION: Notice.

SUMMARY: Pursuant to section 102(2) of the National Environmental Policy Act of 1969 and the regulations implemented by the Council on Environmental Quality (40 CFR parts 1500–1508), the Department of the Navy (Navy) has prepared and filed with the U.S. Environmental Protection Agency (EPA) a Draft Environmental Impact Statement (DEIS) for the stabilization of in-water facilities at Fox Island Laboratory (FIL) on Carr Inlet in southern Puget Sound, Washington. The Navy will conduct a public hearing to receive oral and written comments on the DEIS. Federal, state, and local agencies and interested individuals are invited to be present or represented at the public hearing. Navy representatives will be available to clarify information related to the DEIS.

DATES: The public hearing will be held on Wednesday, January 21, 2004, from 6:30 p.m. to 9 p.m.

ADDRESSES: The public hearing will be held at the Nichols Community Center, 690 9th Ave, Fox Island, Washington.

FOR FURTHER INFORMATION CONTACT: Mrs. Kimberly Kler, Environmental Planner, Engineering Field Activity, Northwest, Naval Facilities Engineering Command, Poulsbo, WA. Telephone: (360) 396–0927, facsimile (360) 396–0856, or E-Mail: *EFPB–EISFox @navy.mil.*

SUPPLEMENTARY INFORMATION: A Notice of Intent to prepare this DEIS was published in the **Federal Register**, 67 FR 14921, March 28, 2002. The public scoping meeting was held on April 17, 2002, at the Nichols Community Center, Fox Island, WA. The scoping meeting was advertised in the *Tacoma News Tribune* on April 7, 11, and 15, 2002, and in the *Peninsula Gateway* on April 10 and 17, 2002.

The proposed action is to stabilize the in-water facilities at Fox Island Laboratory on Carr Inlet in southern Puget Sound. In-water elements of the facility, consisting of several barges, a pier, and associated mooring components, have sustained substantial weather-related damage, and portions of the facility have reached a point of questionable structural integrity. The DEIS analyzes four alternatives, including the No Action Alternative. The Preferred Alternative is installation of a 240-foot pontoon barge and replacement of the existing mooring system. The Preferred Alternative is not expected to result in any significant short or long-term impacts on physical, biological, socio-economic resources, or on beach processes and erosive action occurring to the northwest of FIL.

The DEIS has been distributed to various Federal, state, and local agencies, elected officials, Native American Indian Tribes, and interested parties, and is available for public review at the Peninsula Branch Pierce County Library, 4424 Pt. Fosdick Drive NW, Gig Harbor, WA. The DEIS and other information may be viewed at the following Internet address: *http://www.dt.navy.mil/div/news/foxislandeis.html.*

Oral statements presented at the public hearing will be heard and transcribed by a stenographer; however, to ensure the accuracy of the record, all statements should be submitted in writing. All statements, both oral and written, will become part of the public record on the DEIS and will be responded to in the Final Environmental Impact Statement (FEIS). Equal weight will be given to both oral and written statements.

Written comments and statements can be submitted at the public hearing or mailed to: Commander, Engineering Field Activity, Northwest, Naval Facilities Engineering Command, Attn: Mrs. Kimberly Kler, Code 053C3.KK, 19917 7th Ave NE., Poulsbo, WA, 98370. All written comments postmarked by February 2, 2004, will become part of the official public record and will be responded to in the FEIS.

Dated: December 23, 2003.

S.K. Melancon,

Paralegal Specialist, Office of the Judge Advocate General, Alternate Federal Register Liaison Officer.

[FR Doc. 03–32105 Filed 12–30–03; 8:45 am]

BILLING CODE 3810–FF–P

DEPARTMENT OF DEFENSE

Department of the Navy

Notice of Intent To Grant Exclusive Patent License; Seahawk Biosystems Corporation

AGENCY: Department of the Navy, DOD.

ACTION: Notice.

SUMMARY: The Department of the Navy hereby gives notice of its intent to grant to Seahawk Biosystems Corporation, a revocable, nonassignable, exclusive license to practice in the field of pathogen detection and disease and infection diagnostic testing for veterinary applications (small and large animals, including equine); pathogen and toxin detection in food products derived from animals; pathogen and toxin detection in food processing; pathogen and toxin detection in, and monitoring of, public water, wastewater, and groundwater in the United States and certain foreign countries, the Government-owned inventions described in U.S. Patent No. 5,981,297 entitled ''Biosensor Using Magnetically-Detected Label'', Navy Case No. 77,576 and U.S. Patent No. 6,180,418 entitled ''Force Discrimination Assay'', Navy Case No. 78,183.

DATES: Anyone wishing to object to the grant of this license must file written objections along with supporting evidence, if any, not later than January 15, 2004.

ADDRESSES: Written objections are to be filed with the Naval Research Laboratory, Code 1004, 4555 Overlook Avenue, SW, Washington, DC 20375–5320.

FOR FURTHER INFORMATION CONTACT: Ms. Jane F. Kuhl, Technology Transfer Office, NRL Code 1004, 4555 Overlook Avenue, SW, Washington, DC 20375–5320, telephone (202) 767–7230. Due to U.S. Postal delays, please fax (202) 404–7920, E–Mail: *kuhl@nrl.navy.mil* or use courier delivery to expedite response.

(Authority: 35 U.S.C. 207, 37 CFR Part 404.)

Dated: December 23, 2003.

S.K. Melancon,

Paralegal Specialist, Office of Judge Advocate General, Alternate Federal Register Liaison Officer.

[FR Doc. 03–32153 Filed 12–30–03; 8:45 am]

BILLING CODE 3810–FF–P

DEPARTMENT OF EDUCATION

Notice of Proposed Information Collection Requests

AGENCY: Department of Education.

SUMMARY: The Acting Leader, Regulatory Information Management Group, Office of the Chief Information Officer, invites comments on the proposed information collection requests as required by the Paperwork Reduction Act of 1995.

DATES: Interested persons are invited to submit comments on or before March 1, 2004.

SUPPLEMENTARY INFORMATION: Section 3506 of the Paperwork Reduction Act of 1995 (44 U.S.C. chapter 35) requires that the Office of Management and Budget (OMB) provide interested Federal agencies and the public an early opportunity to comment on information collection requests. OMB may amend or waive the requirement for public consultation to the extent that public participation in the approval process would defeat the purpose of the information collection, violate State or Federal law, or substantially interfere with any agency's ability to perform its statutory obligations. The Acting Leader, Regulatory Information Management Group, Office of the Chief Information Officer, publishes that notice containing proposed information collection requests prior to submission of these requests to OMB. Each proposed information collection, grouped by office, contains the following: (1) Type of review requested, *e.g.* new, revision, extension, existing or reinstatement; (2) title; (3) summary of the collection; (4) description of the need for, and proposed use of, the information; (5) respondents and frequency of collection; and (6) reporting and/or recordkeeping burden. OMB invites public comment. The Department of Education is especially interested in public comment addressing the following issues: (1) Is this collection necessary to the proper functions of the Department; (2) will this information be processed and used in a timely manner; (3) is the estimate of burden accurate; (4) how might the Department enhance the quality, utility, and clarity of the information to be collected; and (5) how might the Department minimize the burden of this collection on the respondents, including through the use of information technology.

Dated: December 23, 2003.

Jeanne Van Vlandren,

Acting Leader, Regulatory Information Management Group, Office of the Chief Information Officer.

Department of Education

Type of Review: Existing collection in use without an OMB control number.

Title: Education Resource Organizations Directory (EROD).

Frequency: On occasion annually.

Affected Public: State, local, or tribal gov't, SEAs or LEAs (primary), businesses or other for-profit, not-for-profit institutions.

Reporting and Recordkeeping Hour Burden:

Responses: 3935.

Burden Hours: 664.

Abstract: The Education Resource Organizations Directory (EROD) is an electronic directory of educational resource organizations and services available at the State, regional, and national level. The goal of this directory is to help individuals and organizations identify and contact organizational sources of information and assistance on a broad range of education-related topics. Users of the directory include diverse groups such as teachers, librarians, students, researchers, and parents.

Requests for copies of the proposed information collection request may be accessed from *http://edicsweb.ed.gov,* by selecting the ''Browse Pending Collections'' link and by clicking on link number 2434. When you access the information collection, click on ''Download Attachments'' to view. Written requests for information should be addressed to Vivian Reese, Department of Education, 400 Maryland Avenue, SW., Room 4050, Regional Office Building 3, Washington, DC 20202–4651 or to the e-mail address *vivian_reese@ed.gov.* Requests may also be electronically mailed to the Internet address *OCIO_RIMG@ed.gov* or faxed to 202–708–9346. Please specify the complete title of the information collection when making your request.

Comments regarding burden and/or the collection activity requirements should be directed to Schubart at 708–9266. Individuals who use a telecommunications device for the deaf (TDD) may call the Federal Information Relay Service (FIRS) at 1–800–877–8339.

[FR Doc. 03–32141 Filed 12–30–03; 8:45 am]

BILLING CODE 4000–01–P

DEPARTMENT OF ENERGY

[FE Docket No. 03–77–NG]

Office of Fossil Energy; BG LNG Services, LLC; Order Granting Long-Term Authority To Import Liquefied Natural Gas From The Republic of Trinidad and Tobago

AGENCY: Office of Fossil Energy, DOE.

ACTION: Notice of order.

SUMMARY: The Office of Fossil Energy (FE) gives notice that it issued DOE/FE Order No. 1926 granting BG LNG Services, LLC authority to import up to 109 million British thermal units per year over a term of 22 years beginning on December 8, 2003. The liquefied natural gas (LNG) will be imported under a LNG Sale and Purchase Agreement with BG Gas Marketing LTD.

This Order may be found on the FE Web site at *http://www.fe.doe.gov* (select gas regulation). It is also available for inspection and copying in the Office of Natural Gas & Petroleum Import & Export Activities Docket Room, 3E–033, Forrestal Building, 1000 Independence Avenue, SW., Washington, DC 20585–0334, (202) 586–9478. The Docket 4:30 p.m., Monday through Friday, except Federal holidays.

Issued in Washington, DC, December 22, 2003.

Clifford Tomaszewski,

Manager, Natural Gas Regulation, Office of Natural Gas & Petroleum, Import & Export Activities, Office of Fossil Energy.

[FR Doc. 03–32145 Filed 12–30–03; 8:45 am]

BILLING CODE 6450–01–P

DEPARTMENT OF ENERGY

Federal Energy Regulatory Commission

Notice of Filing

December 23, 2003.

In the matter of: ER03–1372–002, ER03–1372–001, ER02–1406–002, ER03–1207–001, ER00–891–003, ER03–287–001, ER00–33–004, ER02–1084–001, ER00–1372–002, ER02–2074–001, ER01–811–001, ER97–2153–013, ER00–2677–003, ER03–170–002, ER01–1302–003, ER03–1039–002, ER00–2117–002, ER00–2118–002, ER00–3751–002, ER00–1828–002, ER00–47–002, ER03–725–002, ER02–24–003, ER01–3103–004, ER01–3103–005, ER99–2781–004, ER02–40–003, ER02–1633–001, ER00–2398–005, ER99–2948–003, ER99–1522–002, ER02–669–003, ER99–3502–002, ER01–560–002, ER03–447–002, ER03–447–001, ER03–1284–001, ER03–25–001, ER02–506–003, ER02–2018–003, ER02–246–002, ER01–2104–004, ER00–38–004, ER03–597–002, ER03–290–001, ER00–1115–002, ER02–614–001, ER00–3562–002, ER03–36–002, ER02–1367–002, ER03–259–001, ER03–496–001, ER00–644–002, ER03–342–001, ER03–341–001, ER00–2917–003, ER03–736–002, ER01–2756–003, ER02–579–002, ER02–879–001, ER01–2301–003, ER98–651–002, ER98–4095–003, ER99–2541–004, ER02–2546–002, ER00–2885–003, ER01–2765–002, ER03–509–001, ER03–206–001, ER03–207–001, ER03–208–001, ER03–209–001, ER98–421–012, ER98–4055–009, ER00–1834–003, ER96–2506–006, ER96–2504–008, ER01–1820–005, ER01–1337–004, ER02–177–005, ER02–2569–003, ER03–1371–001, ER03–1369–001, ER03–1368–001, ER02–1486–002, ER95–1739–021, ER03–1326–001, ER01–2659–003, ER00–1770–006, ER02–453–003, ER02–2567–003, ER00–2918–003, ER02–699–002, ER00–607–003, ER01–3017–004, ER01–1363–004, ER96–25–024, ER02–1959–001, ER01–915–001, ER02–2227–002, ER02–2310–001, ER02–963–003, ER03–880–001, ER03–882–001, ER03–879–001, ER96–149–009, ER03–657–002, ER02–600–002, ER99–2506–002, ER03–1123–001, ER97–324–006, ER99–616–002, ER03–1088–001, ER04–72–001, ER02–22–003, ER03–774–001, ER01–3055–003, ER95–428–025, ER03–394–003, ER02–723–001, ER02–1632–001, ER98–4381–007, ER02–564–001, ER02–862–002, ER96–2709–013, ER02–783–002, ER02–852–002, ER02–855–002, ER04–31–001, ER99–1764–004, ER4–135–001, ER02–23–003, ER02–2228–001, ER97–2463–003, ER03–1292–001, ER99–3450–005, ER99–2769–006, ER02–554–002, ER03–775–001, ER03–983–001, ER02–1903–002, ER03–179–003, ER03–1104–001, ER03–1332–001, ER02–1838–002, ER03–1103–001, ER03–1025–002, ER02–2120–002, ER01–2262–004, ER02–1173–001, ER03–908–001, ER03–439–001, ER03–352–002, ER03–352–002, ER99–1983–002, ER01–2688–004, ER03–833–001, ER99–705–002, ER02–2229–001, ER03–114–001, ER02–159–006, ER02–725–002, ER00–3696–003, ER97–3583–003, ER01–556–002, ER02–388–002, ER01–2159–004, ER02–1257–001, ER03–1159–001, ER02–1366–001, ER97–4381–007, ER01–2641–003, ER03–155–002, ER01–558–002, ER00–2333–002, ER02–1081–001, ER00–1026–007, ER02–267–001, ER02–2330–021, ER02–237–001, ER03–796–002, ER01–2689–004, ER01–3121–002, ER02–418–001, ER03–416–004, ER02–2230–001, ER01–2398–006, ER02–73–003, ER03–653–002, ER03–24–001, ER02–2366–001, ER97–2414–006, ER02–361–001, ER02–2408–001, ER95–851–005, ER03–438–002, ER02–309–002, ER99–830–008, ER03–427–003, ER99–4102–002, ER00–2592–002, ER02–256–001, ER01–1265–003, ER01–1266–003, ER01–1268–004, ER02–1213–002, ER01–1271–004, ER03–160–002, ER01–1272–003, ER01–1274–004, ER01–1275–003, ER02–1331–003, ER02–900–002, ER01–480–002, ER02–137–002, ER02–1582–001, ER03–951–003, ER01–1336–003, ER01–751–004, ER03–1315–002, ER02–737–001, ER02–77–001, ER99–221–006, ER00–2887–003, ER01–1654–004, ER02–2085–001, ER02–257–001, ER02–41–004, ER99–220–009, ER02–2080–001, ER01–2783–005, ER00–3240–002, ER98–3897–009, ER02–1021–003, ER00–1463–003, ER02–2435–002, ER03–198–001, ER97–504–010, ER97–2801–004, ER02–2231–001, ER02–580–002, ER03–372–001, ER03–191–001, ER02–2166–002, ER03–1370–002, ER03–568–002, ER95–430–025, ER02–417–001, ER03–845–001, ER02–26–003, ER02–1485–004, ER03–1109–003, ER03–1108–003, ER03–838–002, ER02–1885–001, ER01–1949–003, R03–1151–001, ER01–48–003, ER02–1749–001, ER99–4503–003, ER02–1747–001, ER02–1325–001, ER02–1327–002, ER95–1096–023, ER01–2928–004, ER97–2374–015, ER03–674–001, ER03–745–001, ER03–618–001, ER03–382–001, ER01–3036–003, ER01–3035–003, ER02–1762–001, ER03–81–002, ER01–3109–003, ER03–49–001, ER03–611–001, ER99–970–003, ER03–1288–001, ER02–553–002, ER00–2080–002, ER02–308–001, ER00–1517–003, ER02–556–002, ER03–295–001, ER02–537–003, ER99–2109–005, ER02–2202–004, ER03–42–003, ER02–258–001, ER99–1261–005, ER01–2887–002, ER02–2263–002, ER02–2400–001, ER03–922–002, ER99–3427–005, ER03–1212–003, ER02–1342–002, ER96–2869–006, ER02–2558–001, ER00–840–003, ER94–389–023, ER03–175–005, ER00–1780–003, ER00–1171–002, ER02–25–003, ER01–852–002, ER02–820–001, ER99–3333–005, ER99–1744–004, ER02–360–001, ER02–973–001, ER99–2817–002, ER02–2042–002, ER02–999–003, ER97–2462–013, ER01–557–002, ER02–2101–001, ER02–1336–002, ER03–1283–002, ER03–1283–003, ER00–2839–001, ER03–28–001, ER03–398–002, ER02–1884–001, ER03–1375–001, ER01–3118–002, ER01–3117–002, ER02–1052–002, ER01–559–002, ER02–2232–001, ER98–411–011, ER03–54–001, ER02–2199–001, ER03–55–001, ER03–56–001, ER02–1028–002, ER01–205–003, ER01–2941–001, ER02–2610–001, ER02–1512–001, ER02–1319–001:

Acadia Power Partners, LLC, Acadia Power Partners, LLC, Acadia Power Partners, LLC, AES Delano, Inc., AES Delano, Inc., AES Placerita, Inc., AES Placerita, Inc., Alcan Power Marketing, Inc., Alcoa Power Generating Inc., Alcoa Power Marketing Inc., Allegheny Energy Supply Company, LLC, Amerada Hess Corporation, American Ref-Fuel Co. of Delaware Valley, L.P., American Ref-Fuel Co. of Essex County, American Ref-Fuel Company of Niagara, L.P., AmPro Energy Wholesale, Inc., ANP Bellingham Energy Company, ANP Blackstone Energy Company, ANP Funding I, L.L.C., ANP Marketing Company, Aquila Long Term, Inc., Aquila Piatt County Power L.L.C., Armstrong Energy Limited Partnership, LLLP, Astoria Energy, LLC, Astoria Generating Company, L.P., Atlantic City Electric Co., Attala Energy Company, LLC, Auburndale Peaker Energy Center, LLC, Baconton Power LLC, Baltimore Gas and Electric Company, Bangor Hydro-Electric Co, Bayswater Peaking Facility, LLC, Berkshire Power Company, LLC, Big Sandy Peaker Plant, LLC, Black Oak Energy, LLC, Black Oak Energy, LLC, Blue Canyon Windpower, LLC, Blue Spruce Energy Center, LLC, Bluegrass Generation Company, L.L.C., Blythe Energy, LLC, Boston Edison Co., Cambridge Electric Light & Cambridge Electric Co., Brascan Energy Marketing Inc., Broad River Energy LLC, Brookhaven Energy Limited Partnership, Calpine California Equipment Finance Company, LLC, Calpine Construction Finance Company, L.P., Calpine Energy Services, L.P., Calpine Energy Services, L.P., Calpine Northbrook Energy Marketing, LLC, Calpine Oneta Power, L.P., Calpine Parline, LLC, Calpine Parline, LLC, Calpine Philadelphia, Inc., Calpine PowerAmerica—CA, LLC, Calpine PowerAmerica—OR, LLC, Calvert Cliffs Nuclear Power Plant, Inc., CAM Energy Products, LP, Camden Cogen, L.P., Capital District Energy Center Cogeneration Association, Carolina Power & Light Company, Carolina Power & Light Company, Carolina Power & Light Company, Carr Street Generating Station, L.P., Cathage Energy LLC, CED Rock Springs, Inc., Cedar Brakes I, L.L.C., Cedar Breakes II, L.L.C., Centennial Power, Inc., CES Marketing II, LLC, CES

Marketing III, LLC, CES Marketing IV, L.P., CES Marketing V, L.P., CinCap IV, LLC, CinCap V, LLC, CinCap VIII, LLC, Cincinnati Gas & Electric Company / PSI Energy, Inc, Cincinnati Gas & Electric Company / PSI Energy, Inc, Cincinnati Gas & Electric Company and PSI Energy, Inc., Cinergy Capital & Trading, Inc., Cinergy Power Investments, Inc., Clark Fork and Blackfoot, L.L.C., Cleco Evangeline LLC, Cleco Marketing & Trading LLC, Cleco Power LLC, Cogen Technologies NJ Venture, Cogentrix Energy Power Marketing, Inc., Colorado Green Holdings LLC, Combined Locks Energy Center, LLC, Conectiv Atlantic Generation, LLC & Conectiv Delmarva Generation, Inc., Conectiv Bethlehem, LLC, Constellation NewEnergy, Inc., Constellation Power Source Generation, Inc., Constellation Power Source Maine, LLC, Constellation Power Source, Inc., Coral Canada U.S. Inc., Coral Energy Management, LLC, Coral Power, L.L.C., CPN Bethpage 3rd Turbine, Inc., CPN Pleasant Hill, LLC and CPN Pleasant Hill Operating, LLC, Creed Energy Center, LLC, Crescent Ridge LLC, Crete Energy Venture, LLC, D.E. Shaw & Co. Energy, L.L.C., D.E. Shaw Plasma Power, L.L.C., D.E. Shaw Plasma Trading, L.L.C., Dartmouth Power Associates Limited Partnership, DB Energy Trading LLC, Delta Energy Center, LLC, Deseret Generation & Transmission Co-operative, Inc., Deseret Generation & Transmission Co-operative, Inc., Detroit Edison Company, Dighton Power Associates, L.P., Direct Energy Marketing Inc., Dispersed Generating Company, LLC, Dresden Energy, LLC, Eagle Energy Partners I, L.P., Eagle Point Cogeneration Partnership, El Paso Merchant Energy, L.P., Elk Hills Power, LLC, Emera Energy Services, Inc., Energy America LLC, Energy Atlantic, LLC, Entergy Nuclear Vermont Yankee, LLC, Entergy Power Ventures, L.P., Entergy Services, Inc., EPCOR Merchant and Capital (US) Inc, EPCOR Power Development Inc., EPDC, Inc., Epic Merchant Energy, L.P., Erie Boulevard Hydropower, L.P., Eurus Combine Hills LLC, Fairless Energy, LLC, Feather River Energy Center, LLC, Fitchburg Gas and Electric Light Company, Florida Power & Light Company, Foote Creek II, LLC, Foote Creek III, LLC, Foothills Generating, L.L.C., FortisOntario, Inc., Fox Energy Company, LLC, FPL Energy Marcus Hook, L.P., FPL Energy New Mexico Wind, LLC, FPL Energy North Dakota Wind, LLC, FPL Energy Oklahoma Wind, LLC, FPL Energy Seabrook, LLC, FPL Energy South Dakota Wind, LLC, FPL Energy Wyoming, LLC, FPLE Rohde Island State Energy, LP, Frederickson Power L.P., Front Range Power Company, LLC, Fulcrum Power Marketing LLC, Fulton Cogeneration Associates, L.P., GenWest, LLC, GenWest, LLC, Geysers Power Company, LLC, Gilroy Energy Center, LLC, Global Common Greenport, LLC, Golden Spread Electric Cooperative, Inc., Goose Haven Energy Center, LLC, Great Bay Power Marketing, Inc., Great Lakes Hydro America, LLC, Great Plains Power, Inc., Griffith Energy LLC, GS Electric Generating Cooperative, Inc., Handsome Lake Energy, LLC, HC Power Marketing LLC, Hermiston Generating Company, L.P., Hermiston Power Partnership, Hershey Chocolate & Confectionary Corp., Hess Energy Power & Gas Company, LLC, Hess Energy, Inc., High Desert Power Project, LLC, High Winds, LLC, Holland Energy, LLC, Horsehead Industries, Inc., Indeck-Oswego Limited Partnership, Indianapolis Power & Light Company, Intercom Energy, Inc., ISO New England, Inc., J. Aron & Company, Katahdin Paper Company LLC, King City Energy Center, LLC, Klamath Energy LLC, Klamath Generation LLC, Klondike Wind Power LLC, Lambie Energy Center, LLC, Liberty Electric Power, LLC, Llano Estacado Wind, LP, LMP Capital, LLC, Los Esteros Critical Energy Facility, LLC, Louis Dreyfus Energy LLC, Lowell Cogeneration Company Limited Partnership, Lowell Cogeneration Company Limited Partnership, Lower Mount Bethel Energy, LLC, Maine Public Service Co., ManChief Power Company, L.L.C., MEP Clarksdale Power, LLC, Merrill Lynch Capital Group, Inc., Mesquite Power, LLC, Milford Power Company, LLC, Milford Power Limited Partnership, Mill Run Windpower, LLC, Mirant Americas Energy Marketing, LP, Mirant Bowline, LLC, Mirant Canal, LLC, Mirant Energy Trading, LLC, Mirant Kendall, LLC, Mirant Las Vegas, LLC, Mirant Lovett, LLC, Mirant New England, LLC, Mirant NY-Gen, LLC, Mirant Oregon, LLC, Mirant Sugar Creek, LLC, Mobile Energy, LLC, Mohawk River Funding III, L.L.C., Mohawk River Funding IV, L.L.C., Moraine Wind LLC, Mountain View Power Partners II, LLC, Mountain View Power Partners, LLC, MS Retail Development Corp, MxEnergy Inc., New Mexico Electric Marketing, LLC, New York State Electric & Gas Corporation, Newark Bay Cogeneration Partnership, L.P., Nine Mile Point Nuclear Station, LLC, Northern Iowa Windpower II LLC, Northern Iowa Windpower, LLC, NorthWestern Energy Marketing, LLC, NYSEG Solutions, Inc., Ocean Peaking Power, LLC, ODEC Power Trading, Inc., Oleander Power Project, Limited Partnership, ONEOK Energy Marketing and Trading Company, L.P., Ontario Energy Trading International Corporation, Orion Power MidWest, L.P., Orion Power New York GP II, Inc., Pacific Gas and Electric Company, Pacific Northwest Generating Cooperative, PacifiCorp, Pajaro Energy Center, LLC, Pawtucket Power Associates Limited Partnership, Peak Power Generating Company, Inc., Peaker LLC, Pennsylvania Windfarms, Inc., Perryville Energy Partners, L.L.C., Phelps Dodge Energy Services, LLC, Philbro, Inc., Phoenix Wind Power LLC, Pinpoint Power, LLC, Pleasants Energy, LLC, Power Contract Finance, L.L.C., Power Contract Financing II, Inc., Power Contract Financing II, L.L.C., Power Contract Financing, L.L.C., Power Development Company, L.L.C., Power Provider LLC, Power Receivable Finance, LLC, Powerex Corp, PPL Edgewood Energy, LLC, PPL Great Works, LLC, PPL Shoreham Energy, LLC, PPL Sundance Energy, LLC, PPL University Park, LLC, PPM Energy, Inc., Progress Ventures, Inc., Quark Power L.L.C., Quest Energy, LLC, Reliant Energy Bighorn, LLC, Reliant Energy Choctaw County, Reliant Energy Electric Solutions, LLC, Reliant Energy Hunterstown, LLC, Reliant Energy Seward, LLC, Reliant Energy Solutions East, LLC, Reliant Energy Solutions West, LLC, Renaissance Power, L.L.C., Riverside Energy Center, LLC, Riverview Energy Center, LLC, RockGen Energy, LLC, Rocky Mountain Energy Center, LLC, Rolling Hills Generating, L.L.C., Rumford Power Associates, L.P., RWE Trading Americas, Inc., San Joaquin Cogen Limited, Select Energy New York, Inc., SESCO Enterprises, LLC, Shady Hills Power Company, LLC, Shell Energy Services Company, L.L.C., Sithe Energy Marketing, L.P., Sithe/Independence Power Partners, L.P., Somerset Windpower, LLC, South Glens Falls Energy, LLC, South Point Energy Center, LLC, Southern California Edison Company, Southern California Water Company, Southhaven Power, LLC, SOWEGA Power LLC, St. Paul Cogeneration, LLC, State Line Energy, L.L.C., State Line Energy, L.L.C., SWEPI LP, Tenaska Alabama Partners, L.P., Tenaska Power Services Co., Termoelectrica U.S., LLC, Texas Electric Marketing, LLC, Tiverton Power Associates, L.P., Troy Energy, LLC, Twelvepole Creek, LLC, TXU Pedricktown Cogeneration Company LP, TXU Portfolio Management Company LP, UAE Lowell Power LLC, UAE Lowell Power LLC, UBS AG, UGI Development Company, UGI Utilities, Inc., Unitil Power Corp., Unitil Resources, Inc., University Park Energy, LLC, Utility Contract Funding, L.L.C., Vandolah Power Company, L.L.C., Vineland Energy LLC, Vineland Energy, LLC, Virginia Electric and Power Company, Walton County Power, LLC, Washington County Power LLC, Waterside Power, L.L.C., Waymart Wind Farm L.P., Wellhead Power Gates, LLC, Wellhead Power Panoche, LLC, West Georgia Generating Company, LLC, Wolf Hills Energy, LLC, Wolfskill Energy Center, LLC, Wolverine Power Supply Cooperative, Inc., WPS Beaver Falls Generation, LLC, WPS Empire State, Inc., WPS Niagara Generation, LLC, WPS Syracuse Generation, LLC, Wrightsville Power Facility, LLC, Xcel Energy Services, Xcel Energy Services, XL Weather & Energy Inc., Yuba City Energy Center, LLC, Zion Energy LLC.

Take notice that on December 15, 16, and 17, 2003, the above referenced companies submitted a compliance filing in response to the Commission's November 17, 2003 Order Amending Market-based Rate Tariffs and Authorizations, in Docket No. EL01–118–000 and 001.

Any person desiring to intervene or to protest this filing should file with the Federal Energy Regulatory Commission, 888 First Street, NE., Washington, DC 20426, in accordance with Rules 211 and 214 of the Commission's Rules of Practice and Procedure (18 CFR 385.211 and 385.214). Protests will be considered by the Commission in determining the appropriate action to be taken, but will not serve to make protestants parties to the proceeding. Any person wishing to become a party must file a motion to intervene. All such motions or protests should be filed on or before the comment date, and, to the extent applicable, must be served on the applicant and on any other person

designated on the official service list. This filing is available for review at the Commission or may be viewed on the Commission's Web site at *http://www.ferc.gov*, using the eLibrary (FERRIS) link. Enter the docket number excluding the last three digits in the docket number field to access the document. For assistance, please contact FERC Online Support at *FERCOnlineSupport@ferc.gov* or toll-free at (866) 208–3676, or for TTY, contact (202) 502–8659. Protests and interventions may be filed electronically via the Internet in lieu of paper; see 18 CFR 385.2001(a)(1)(iii) and the instructions on the Commission's web site under the ''e-Filing'' link. The Commission strongly encourages electronic filings.

Comment Date: January 14, 2004.

Linda Mitry,

Acting Secretary.

[FR Doc. E3–00662 Filed 12–30–03; 8:45 am]

BILLING CODE 6717–01–P

ENVIRONMENTAL PROTECTION AGENCY

[FRL–7604–6]

Clean Air Act Operating Permit Program; Petition for Objection to State Operating Permit DuPont Dow Elastomers, L.L.C.

AGENCY: Environmental Protection Agency (EPA).

ACTION: Notice of final order on petition to object to State operating permit.

SUMMARY: This notice announces that the EPA Administrator has denied the petition to object to a State operating permit issued by the Louisiana Department of Environmental Quality (LDEQ) for the chloroprene plant at DuPont Dow Chemical Company in La Place, Louisiana. Pursuant to section 505(b)(2) of the Clean Air Act (Act), the petitioner may seek judicial review of this petition response in the United States Court of Appeals for the Fifth Circuit. Any petition must be filed within 60 days of the date this notice appears in the **Federal Register**, pursuant to section 307(d) of the Act.

ADDRESSES: You may review copies of the final order, the petition, and other supporting information at the Environmental Protection Agency, Region 6, 1445 Ross Avenue, Dallas, Texas 75202–2733. If you wish to examine these documents, you should make an appointment at least 24 hours before visiting day. The final order is also available electronically at the following address: *http://www.epa.gov/region07/programs/artd/air/title5/petitiondb/petitiondb2001.htm*.

FOR FURTHER INFORMATION CONTACT: Ms. Bonnie Braganza, Air Permitting Section, Multimedia Planning and Permitting Division, U.S. EPA, Region 6, 1445 Ross Avenue, Dallas, Texas 75202–2733, telephone (214) 665–7340, or e-mail at *braganza.bonnie@epa.gov*.

SUPPLEMENTARY INFORMATION: The Act affords EPA a 45-day period to review, and object as appropriate to, operating permits proposed by State permitting authorities. Section 505(b)(2) of the Act authorizes any person to petition the EPA Administrator within 60 days after the expiration of this review period to object to State operating permits if EPA has not done so. Petitions must be based only on objections to the permit that were raised with reasonable specificity during the public comment period provided by the State, unless the petitioner demonstrates that it was impracticable to raise these issues during the comment period or the grounds for the issues arose after this period.

The Louisiana Environmental Action Network submitted a petition requesting that the Administrator object to a title V operating permit issued by LDEQ to DuPont Dow Chemical Company, for the chloroprene unit at the DuPont Dow Elastomer's facility, in La Place, Louisiana.

The petitioner requested that the Administrator object to the DuPont Dow permit based on the following broad assertions:

1. LDEQ's interpretation of 40 Code of Federal Regulations (CFR) 63.115 is inconsistent with the Act's goal of protecting public health;
2. LDEQ's interpretation would result in increased discharges of halogenated organic hazardous air pollutants (HAP), an ''extremely dangerous'' class of pollutants;
3. LDEQ's interpretation results in greater controls of nonhalogenated vent streams relative to halogenated vent streams;
4. A rational interpretation of 40 CFR 63.115 must result in a Group 1 classification and the accompanying control requirements;
5. LDEQ has misinterpreted 40 CFR 63.115.

On November 20, 2003, the Administrator issued an order denying the petition. The order explains the reasons for the Administrator's decision.

Dated: December 18, 2003.

Lawrence E. Starfield,

Acting Regional Administrator, Region 6.

[FR Doc. 03–32215 Filed 12–30–03; 8:45 am]

BILLING CODE 6560–50–P

ENVIRONMENTAL PROTECTION AGENCY

[AMS–FRL–7605–7]

California State Motor Vehicle Pollution Control Standards; Within the Scope Requests; Opportunity for Public Hearing and Comment

AGENCY: Environmental Protection Agency (EPA).

ACTION: Notice of opportunity for public hearing and public comment.

SUMMARY: The California Air Resources Board (CARB) has notified EPA that it has approved amendments to its regulations establishing certification requirements and procedures for heavy-duty diesel engines and vehicles. The amendments require heavy-duty engines and vehicles (except urban buses) to meet a new mandatory oxides of nitrogen (NO_X) standard in 1998 and subsequent model years and establish optional NO_X standards beginning with the 1995 model year. CARB's amendments also provide a new definition of useful life for these vehicles and require new information within California's motor vehicle emission control label. CARB requests that EPA confirm CARB's finding that its amendments are within-the-scope of previous waivers issued by EPA under section 209(b) of the Clean Air Act (Act), 42 U.S.C. 7543(b), including a waiver of Federal preemption for California's heavy-duty diesel powered engines and vehicles, which EPA approved on March 4, 1988.

CARB has also notified EPA that it has approved amendments to its regulations establishing certification requirements and procedures for heavy-duty diesel engines and vehicles defined as urban buses. These amendments update the emission standards for particulate matter (PM) and NO_X for urban buses and align California's PM standards with Federal standards for such engines in the 1994 and 1995 model years. These amendments also align California PM standards with the Federal PM standard for 1996 and later model years and California's NO_X standard with Federal standards starting in the 1996 model year. The amendments also provide for an optional, more stringent, NO_X emission standard beginning with the 1994 model year. CARB's amendments also provide a new definition of useful life for these vehicles and require new information within California's motor vehicle emission control label. CARB requests that EPA confirm CARB's finding that its amendments are within-the-scope of previous waivers issued by

EPA under section 209(b) of the Clean Air Act (Act), 42 U.S.C. 7543(b), including a waiver of Federal preemption for California's heavy-duty diesel powered engines and vehicles, which EPA approved on March 4, 1988.

DATES: EPA has tentatively scheduled a public hearing for January 30, 2004, beginning at 10 a.m. EPA will hold a hearing only if a party notifies EPA by January 15, 2004, expressing its interest in presenting oral testimony regarding CARB's requests or other issues noted in this notice. By January 20, 2004, any person who plans to attend the hearing should call David Dickinson of EPA's Certification and Compliance Division at (202) 343–9256 to learn if we will hold a hearing. Any party may submit written comments by January 30, 2004.

ADDRESSES: EPA will make available for public inspection at the Air and Radiation Docket written comments received from interested parties, in addition to any testimony given at the public hearing. The official public docket is the collection of materials that is available for public viewing at the Air and Radiation Docket in the EPA Docket Center, (EPA/DC) EPA West, Room B102, 1301 Constitution Ave., NW., Washington, DC. The EPA Docket Center Public Reading Room is open from 8:30 to 4:30 p.m., Monday through Friday, excluding legal holidays. The telephone number for the Public Reading Room is (202) 566–1744, and the telephone number for the Air and Radiation Docket is (202) 566–1743. The reference numbers for these dockets are A–2000–45 and A–2002–16. Parties wishing to present oral testimony at the public hearing(s) should provide written notice to David Dickinson at the address noted below; parties should also submit any written comments to David Dickinson. If EPA receives a request for a public hearing, EPA will hold the public hearing at 1310 L St., NW., Washington, DC 20005.

FOR FURTHER INFORMATION CONTACT: David Dickinson, Certification and Compliance Division (6405J), U.S. Environmental Protection Agency, 1200 Pennsylvania Ave., NW., Washington, DC 20460. Telephone: (202) 343–9256, Fax: (202) 342–2804, e-mail address: *Dickinson.David@EPA.GOV.*

EPA makes available an electronic copy of this notice on the Office of Transportation and Air Quality's (OTAQ's) homepage (*http://www.epa.gov/otaq/*). Users can find this document by accessing the OTAQ homepage and looking at the path entitled ''Regulations.'' This service is free of charge, except any cost you already incur for Internet connectivity. Users can also get the official **Federal Register** version of the notice on the day of publication on the primary Web site: (*http://www.epa.gov/docs/fedrgstr/EPA–AIR/*).

Please note that due to differences between the software used to develop the documents and the software into which the documents may be downloaded, changes in format, page length, etc., may occur. Parties wishing to present oral testimony at the public hearing should provide written notice to David Dickinson at: U.S. Environmental Protection Agency, 1200 Pennsylvania Ave., NW., (6405J), Washington, DC 20460. Telephone: (202) 343–9256. If EPA receives request for a public hearing, the public hearing will be held

SUPPLEMENTARY INFORMATION:

I. Background

Section 209(a) of the Clean Air Act, as amended (''Act''), 42 U.S.C. 7543(a), provides:

> No State or any political subdivision thereof shall adopt or attempt to enforce any standard relating to the control of emissions from new motor vehicles or new motor vehicle engines subject to this part. No State shall require certification, inspection or any other approval relating to the control of emissions from any new motor vehicle or new motor vehicle engine as condition precedent to the initial retail sale, titling (if any), or registration of such motor vehicle, motor vehicle engine, or equipment.

Section 209(b)(1) of the Act requires the Administrator, after notice and opportunity for public hearing, to waive application of the prohibitions of section 209(a) for any State that has adopted standards (other than crankcase emission standards) for the control of emissions from new motor vehicles or new motor vehicle engines prior to March 30, 1966, if the State determines that the State standards will be, in the aggregate, at least as protective of public health and welfare as applicable Federal standards. The Administrator must grant a waiver unless he finds that (A) the determination of the State is arbitrary and capricious, (B) the State does not need the State standards to meet compelling and extraordinary conditions, or (C) the State standards and accompanying enforcement procedures are not consistent with section 202(a) of the Act.

CARB submitted a February 27, 1997 letter to the Administrator notifying EPA that it had adopted amendments to its heavy-duty diesel powered vehicles and engines program. These amendments provide for: (1) A mandatory 4.0g/bhp-hr NO_X standard for heavy-duty engines and vehicles for the 1998 and subsequent model years which parallels EPA's adoption of this standard; (2) optional, lower NO_X emission standards beginning with the 1995 model year; (3) changing the ''useful life'' definition for heavy-duty engines and vehicles under Title 13, California Code of Regulations, section 2112, by extending the period of ''useful life'' from eight to ten years while maintaining the applicable, alternative mileage provisions that range from 110,000 miles to 290,000 miles (whichever occurs first); and (4) implementing new requirements for the California Motor Vehicle Emission Control Label Specifications in order to identify those engines which are certified to the optional, lower emission standards.

CARB asserts, and requests that the Administrator determine, that its NO_X emission standards and useful life definition fall within-the-scope of EPA's previously granted waiver, and thereby may be deemed to meet the requirements of section 209(b) of the Act set forth above.

CARB also submitted a December 26, 1995 letter to the Administrator notifying EPA that it had adopted amendments to its standards for heavy-duty diesel powered vehicles and engines defined as urban buses. These amendments provide for: (1) An alignment of California's PM standards (0.07 g/bhp-hr) with Federal standards for such engines in the 1994 and 1995 model years and with the Federal PM standard (0.05 g/bhp-hr with a 0.07 g/bhp-hr in-use standard) used in 1996 and later model years; (2) a NO_X standard (4.0g/bhp-hr) starting in the 1996 model year for urban buses; (3) adoption of the Federal urban bus definition; (4) an exemption from the 4.0 g/bhp-hr NO_X standard for up to 10 percent of urban bus sales for model years 1996 and 1997; (5) an allowance to use California diesel fuel for certifying 1996 and 1997 model year urban buses and in 1998 and thereafter the applicable Federal test fuel; (6) an optional, lower NO_X emission standards beginning with the 1994 model year; (7) changing the ''useful life'' definition for 1994 and later urban buses from eight to ten years while maintaining the alternative mileage provision at 290,000 miles (whichever occurs first); and (8) implementing new requirements for the California Motor Vehicle Emission Control Label Specifications in order to identify those engines which are certified to the optional emission standards.

CARB asserts, and requests that the Administrator determine, that its NO_X and PM emission standards and useful life definition fall within-the-scope of

EPA's previously granted waiver, and thereby may be deemed to meet the requirements of section 209(b) of the Act set forth above.

EPA has decided in the past that when California's amendments: (1) Do not undermine the previous determination that California's standards, in the aggregate, are at least as protective of public health and welfare as comparable Federal standards; (2) do not affect the consistency of California's requirements with section 202(a) of the Act; and (3) raise no new issues affecting EPA's previous waiver determinations, that EPA's concurrence that the amendments are within-the-scope of a previous waiver determination is merited.

When EPA receives new waiver requests from CARB, EPA publishes a notice of opportunity for public hearing and comment and then publishes a decision in the **Federal Register** following the public comment period. In contrast, when EPA receives within-the-scope waiver requests from CARB, EPA traditionally publishes a decision in the **Federal Register** and concurrently invites public comment if an interested party is opposed to EPA's decision.

EPA invites comment on the following issues before making a determination for CARB's within-the-scope requests: (1) Should EPA consider CARB's requests as within-the-scope of a previous waiver request or should they be considered and examined as new waiver requests? (2) If EPA were to consider CARB's requests as within-the-scope requests then do California's respective amendments (a) undermine California's previous determinations that its standards, in the aggregate, are at least as protective of public health and welfare as comparable Federal standards, (b) affect the consistency of California's requirements with section 202(a) of the Act, and (c) raise new issues affecting EPA's previous waiver determinations? (3) If EPA were to consider CARB's requests as new waiver requests, then provide comment on (a) whether California's determinations that its standards are at least as protective of public health and welfare as applicable Federal standards is arbitrary and capricious, (b) whether California needs separate standards to meet compelling and extraordinary conditions, and (c) whether California's standards and accompanying enforcement procedures are consistent with section 202(a) of the Act.

II. Procedures for Public Participation

If a public hearing is held, any party desiring to make an oral statement on the record should file ten (10) copies of its proposed testimony and other relevant material with David Dickinson at the address listed above no later than January 28, 2004. In addition, the party should submit 25 copies, if feasible, of the planned statement to the presiding officer at the time of the hearing.

In recognition that a public hearing is designed to give interested parties an opportunity to participate in this proceeding, there are no adverse parties as such. Statements by participants will not be subject to cross-examination by other participants with special approval by the presiding officer. The presiding officer is authorized to strike from the record statements that he or she deems irrelevant or repetitious and to impose reasonable time limits on the duration of the statement of any participant.

If a hearing is held, the Agency will make a verbatim record of the proceedings. Interested parties may arrange with the reporter at the hearing to obtain a copy of the transcript at their own expense. Regardless of whether a public hearing is held, EPA will keep the record open until March 1, 2004. Upon expiration of the comment period, the Administrator will render a decision on CARB's request based on the record of the public hearing, if any, relevant written submissions, and other information that he deems pertinent.

Persons with comments containing proprietary information must distinguish such information from other comments to the greatest possible extent and label it as ''Confidential Business Information'' (CBI). If a person making comments wants EPA to base its decision in part on a submission labeled CBI, then a nonconfidential version of the document that summarizes the key data or information should be submitted for the public docket. To ensure that proprietary information is not inadvertently placed in the docket, submissions containing such information should be sent directly to the contact person listed above and not to the public docket. Information covered by a claim of confidentiality will be disclosed by EPA only to the extent allowed and by the procedures set forth in 40 CFR part 2. If no claim of confidentiality accompanies the submission when EPA receives it, EPA will make it available to the public without further notice to the person making comments.

Dated: December 19, 2003.

Robert Brenner,

Acting Assistant Administrator for Office of Air and Radiation.

[FR Doc. 03–32208 Filed 12–30–03; 8:45 am]

BILLING CODE 6560–50–P

ENVIRONMENTAL PROTECTION AGENCY

[FRL–7603–2]

Notice of Meeting of the EPA's Children's Health Protection Advisory Committee (CHPAC)

AGENCY: Environmental Protection Agency (EPA).

ACTION: Notice of meeting.

SUMMARY: Pursuant to the provisions of the Federal Advisory Committee Act, Public Law 92–463, notice is hereby given that the next meeting of the Children's Health Protection Advisory Committee (CHPAC) will be held January 14–15, 2004 at the Hotel Washington, Washington, DC. The CHPAC was created to advise the Environmental Protection Agency on science, regulations, and other issues relating to children's environmental health.

DATES: Wednesday, January 14 and the afternoon of Thursday, January 15, plenary sessions will take place; the Science and Regulatory Work Groups will meet the morning of Thursday, January 15.

ADDRESSES: Hotel Washington, 515 15th Street, NW., Washington, DC.

FOR FURTHER INFORMATION CONTACT: Contact Joanne Rodman, Office of Children's Health Protection, USEPA, MC 1107A, 1200 Pennsylvania Avenue, NW., Washington, DC 20460, (202) 564–2188, *rodman.joanne@epa.gov.*

SUPPLEMENTARY INFORMATION: The meetings of the CHPAC are open to the public. The plenary CHPAC will meet on Wednesday, January 14 from 9 a.m. to 5 p.m., with a public comment period at 4:30 p.m., and on Thursday, January 15 from 12 p.m. to 5 p.m. The Science and Regulatory Work Groups will meet Thursday, January 15 from 9 a.m. to 12 p.m.

The plenary session will open with introductions and a review of the agenda and objectives for the meeting. Agenda items include highlights of the Office of Children's Health Protection (OCHP) activities and orientation for new CHPAC members. Other potential agenda items include a presentation on the Mercury MACT and the Mercury Action Plan, and a panel presentation on Smart Growth.

Dated: December 10, 2003.

Joanne K. Rodman,

Designated Federal Official.

Agenda

Wednesday, January 14, 2004

9—*Welcome, Introductions, Review Meeting Agenda*
9:30—*Highlights of Recent OCHP Activities*
10—*General Discussion: Orientation to the CHPAC*
10:45—Break
11—*Report from the Transition Committee: Recommended Strategic Priorities for CHPAC*
12—Lunch (on your own)
1:15—*Presentation: EPA's Response to the CHPAC's Smart Growth Recommendations*
2:15—*Panel: Background Briefing on Mercury MACT*
3:30—Break
3:45—*Discussion of Possible CHPAC Comments on Mercury*
5—Public Comment
5:30—Adjourn

Thursday, January 15, 2004

9—Work Group Meetings
12 Lunch
1:15—*Science Policy Work Group Report*
2—*Regulatory Policy Work Group Report*
4—*Wrap Up/Next Steps*
4:30—*Adjourn Plenary*

[FR Doc. 03–32213 Filed 12–30–03; 8:45 am]

BILLING CODE 6560–50–P

ENVIRONMENTAL PROTECTION AGENCY

[FRL–7605–1]

Meetings of the Drinking Water Contaminant Candidate List Classification Process Work Group of the National Drinking Water Advisory Council

AGENCY: Environmental Protection Agency.

ACTION: Notice of public meetings.

SUMMARY: Under section 10(a)(2) of Public Law 92–423, ''The Federal Advisory Committee Act,'' notice is hereby given of the forthcoming meetings of the Drinking Water Contaminant Candidate List (CCL) Classification Process Work Group of the National Drinking Water Advisory Council (NDWAC), established under the Safe Drinking Water Act, as amended (42 U.S.C. 300f *et seq.*).

DATES: The dates for the NDWAC CCL Work Group meetings will be as follows: January 22–23, 2004; and March 4–5, 2004. All meetings will be held from 9 a.m.—5 p.m., eastern time on the first day, and 8 a.m.—3:30 p.m., eastern time on the second day.

ADDRESSES: All meetings of the CCL Work Group will be held at RESOLVE Inc., 1255 23rd Street, NW., Suite 275, Washington, DC.

FOR FURTHER INFORMATION CONTACT: For more information on the location and times of these meetings, or general background information, please contact the Safe Drinking Water Hotline (phone: (800) 426–4791 or (703) 412–3330; e-mail: *hotline-sdwa@epa.gov).*

Notice will be given for any date change, or if additional meetings will be needed beyond the March meeting, as the Work Group proceeds through the year. Please contact RESOLVE at (202) 944–2300 if you plan to attend any of the meetings listed. Any person needing special accommodations at any of these meetings, including wheelchair access, should also contact RESOLVE at least five business days before the meeting so that appropriate arrangements can be made. For technical information, please contact Dr. Jitendra Saxena, Designated Federal Officer, CCL Classification Process Work Group, U.S. Environmental Protection Agency, Office of Ground Water and Drinking Water (4607M), 1200 Pennsylvania Avenue, NW., Washington, DC 20460 (e-mail: *saxena.jitendra@epa.gov;* phone: (202) 564–5243).

SUPPLEMENTARY INFORMATION: The CCL serves as the primary source of priority contaminants for research and regulatory evaluations for the Agency's drinking water program. The CCL list is comprised of both chemical and microbial contaminants that are known or anticipated to occur in public water systems, that may have adverse health effects, and which, at the time of publication, are not subject to any proposed or promulgated national primary drinking water regulations. EPA has formed a CCL Classification Process Work Group of the National Drinking Water Advisory Council (NDWAC) to help the Agency in developing a new risk based priority setting process based on the recommendations made by the National Research Council (NRC) in its 2001 report.

The Work Group is comprised of 21 recognized technical experts who represent an array of backgrounds and perspectives and who are as impartial and objective as possible. The Work Group is charged with discussing, evaluating, and providing advice on methodologies, activities, and analysis needed to implement the NRC recommendations on an expanded approach for the CCL listing process. This may include advice on developing and identifying (1) an overall implementation strategy; (2) prototype classification methodology, classification attributes and criteria that should be used; (3) pilot projects to validate new classification approaches; (4) demonstration studies that explore the feasibility of the VFAR (Virulance-Factor Activity Relationships) approach; (5) risk communication issues; and (6) additional issues not addressed in the NRC report.

The Work Group has held eight meetings thus far: September 18–19, 2002; December 16–17, 2002; February 5–6, 2003; March 27–28, 2003; May 12–13, 2003; July 16–17, 2003; September 17–18, 2003; and November 13–14, 2003. The September 2002 meeting was devoted to gaining understanding of the NRC recommendations from the invited members of the NRC panel; identifying questions, issues and technical expertise needed to fulfill its charge; and, planning next steps. During subsequent meetings, the Work Group formed activity groups for small group discussions, with each group containing four to eight members; the activity groups then report back to the plenary Work Group. Each activity group holds several conference calls for more detailed group discussions in between the meetings on issues that the plenary Work Group is addressing. The Work Group has discussed methods applicable to contaminant classification and prioritization, occurrence and health effects data needed for this purpose, sources and quality of data needed, and the use of QSAR (Quantitative Structure Activity Relationships) models for providing data when experimental data is unavailable. In addition, the Work Group has held discussions about the VFAR concept and how the concept can be used for identifying high priority microbial contaminants. The Work Group has developed the groups's guiding principles, project work plan, and a tentative final report outline.

The meetings are open to the public for observation purposes only. Statements from the public will be allowed at the close of each meeting day. EPA is not soliciting written comments and is not planning to formally respond to comments.

Nanci E. Gelb,

Acting Director, Office of Ground Water and Drinking Water.

[FR Doc. 03–32216 Filed 12–30–03; 8:45 am]

BILLING CODE 6560–50–P

ENVIRONMENTAL PROTECTION AGENCY

[OPP–2003–0366; FRL–7334–2]

Clothianidin; Notice of Filing a Pesticide Petition to Establish a Tolerance for a Certain Pesticide Chemical in or on Food

AGENCY: Environmental Protection Agency (EPA).

ACTION: Notice.

SUMMARY: This notice announces the initial filing of a pesticide petition proposing the establishment of regulations for residues of a certain pesticide chemical in or on various food commodities.

DATES: Comments, identified by docket ID number OPP–2003–0366, must be received on or before January 30, 2004.

ADDRESSES: Comments may be submitted electronically, by mail, or through hand delivery/courier. Follow the detailed instructions as provided in Unit I. of the **SUPPLEMENTARY INFORMATION.**

FOR FURTHER INFORMATION CONTACT: Daniel Kenny, Registration Division (7505C), Office of Pesticide Programs, Environmental Protection Agency, 1200 Pennsylvania Ave., NW., Washington, DC 20460–0001; telephone number: (703) 305–7546; e-mail address:*kenny.dan@epa.gov*.

SUPPLEMENTARY INFORMATION:

I. General Information

A. Does this Action Apply to Me?

You may be potentially affected by this action if you are an agricultural producer, food manufacturer or pesticide manufacturer. Potentially affected entities may include, but are not limited to:

- Crop production (NAICS code 111)
- Animal production (NAICS code 112)
- Food manufacturing (NAICS code 311)
- Pesticide manufacturing (NAICS code 32532)

This listing is not intended to be exhaustive, but rather provides a guide for readers regarding entities likely to be affected by this action. Other types of entities not listed in this unit could also be affected. The North American Industrial Classification System (NAICS) codes have been provided to assist you and others in determining whether this action might apply to certain entities. If you have any questions regarding the applicability of this action to a particular entity, consult the person listed under **FOR FURTHER INFORMATION CONTACT.**

B. How Can I Get Copies of this Document and Other Related Information?

1. *Docket*. EPA has established an official public docket for this action under docket ID number OPP–2003–0366. The official public docket consists of the documents specifically referenced in this action, any public comments received, and other information related to this action. Although, a part of the official docket, the public docket does not include Confidential Business Information (CBI) or other information whose disclosure is restricted by statute. The official public docket is the collection of materials that is available for public viewing at the Public Information and Records Integrity Branch (PIRIB), Rm. 119, Crystal Mall #2, 1921 Jefferson Davis Hwy., Arlington, VA. This docket facility is open from 8:30 a.m. to 4 p.m., Monday through Friday, excluding legal holidays. The docket telephone number is (703) 305–5805.

2. *Electronic access*. You may access this **Federal Register** document electronically through the EPA Internet under the ''**Federal Register**'' listings at *http://www.epa.gov/fedrgstr/*.

An electronic version of the public docket is available through EPA's electronic public docket and comment system, EPA Dockets. You may use EPA Dockets at *http://www.epa.gov/edocket/* to submit or view public comments, access the index listing of the contents of the official public docket, and to access those documents in the public docket that are available electronically. Although, not all docket materials may be available electronically, you may still access any of the publicly available docket materials through the docket facility identified in Unit I.B.1. Once in the system, select ''search,'' then key in the appropriate docket ID number.

Certain types of information will not be placed in the EPA Dockets. Information claimed as CBI and other information whose disclosure is restricted by statute, which is not included in the official public docket, will not be available for public viewing in EPA's electronic public docket. EPA's policy is that copyrighted material will not be placed in EPA's electronic public docket but will be available only in printed, paper form in the official public docket. To the extent feasible, publicly available docket materials will be made available in EPA's electronic public docket. When a document is selected from the index list in EPA Dockets, the system will identify whether the document is available for viewing in EPA's electronic public docket. Although, not all docket materials may be available electronically, you may still access any of the publicly available docket materials through the docket facility identified in Unit I.B. EPA intends to work towards providing electronic access to all of the publicly available docket materials through EPA's electronic public docket.

For public commenters, it is important to note that EPA's policy is that public comments, whether submitted electronically or on paper, will be made available for public viewing in EPA's electronic public docket as EPA receives them and without change, unless the comment contains copyrighted material, CBI, or other information whose disclosure is restricted by statute. When EPA identifies a comment containing copyrighted material, EPA will provide a reference to that material in the version of the comment that is placed in EPA's electronic public docket. The entire printed comment, including the copyrighted material, will be available in the public docket.

Public comments submitted on computer disks that are mailed or delivered to the docket will be transferred to EPA's electronic public docket. Public comments that are mailed or delivered to the docket will be scanned and placed in EPA's electronic public docket. Where practical, physical objects will be photographed, and the photograph will be placed in EPA's electronic public docket along with a brief description written by the docket staff.

C. How and to Whom Do I Submit Comments?

You may submit comments electronically, by mail, or through hand delivery/courier. To ensure proper receipt by EPA, identify the appropriate docket ID number in the subject line on the first page of your comment. Please ensure that your comments are submitted within the specified comment period. Comments received after the close of the comment period will be marked ''late.'' EPA is not required to consider these late comments. If you wish to submit CBI or information that is otherwise protected by statute, please follow the instructions in Unit I.D. Do not use EPA Dockets or e-mail to submit CBI or information protected by statute.

1. *Electronically*. If you submit an electronic comment as prescribed in this unit, EPA recommends that you include your name, mailing address, and an e-mail address or other contact information in the body of your

comment. Also, include this contact information on the outside of any disk or CD ROM you submit, and in any cover letter accompanying the disk or CD ROM. This ensures that you can be identified as the submitter of the comment and allows EPA to contact you in case EPA cannot read your comment due to technical difficulties or needs further information on the substance of your comment. EPA's policy is that EPA will not edit your comment, and any identifying or contact information provided in the body of a comment will be included as part of the comment that is placed in the official public docket, and made available in EPA's electronic public docket. If EPA cannot read your comment due to technical difficulties and cannot contact you for clarification, EPA may not be able to consider your comment.

i. *EPA Dockets*. Your use of EPA's electronic public docket to submit comments to EPA electronically is EPA's preferred method for receiving comments. Go directly to EPA Dockets at *http://www.epa.gov/edocket/*, and follow the online instructions for submitting comments. Once in the system, select ''search,'' and then key in docket ID number OPP–2003–0366. The system is an ''anonymous access'' system, which means EPA will not know your identity, e-mail address, or other contact information unless you provide it in the body of your comment.

ii. *E-mail*. Comments may be sent by e-mail to opp-docket@epa.gov, Attention: Docket ID number OPP–2003–0366. In contrast to EPA's electronic public docket, EPA's e-mail system is not an ''anonymous access'' system. If you send an e-mail comment directly to the docket without going through EPA's electronic public docket, EPA's e-mail system automatically captures your e-mail address. E-mail addresses that are automatically captured by EPA's e-mail system are included as part of the comment that is placed in the official public docket, and made available in EPA's electronic public docket.

iii. *Disk or CD ROM*. You may submit comments on a disk or CD ROM that you mail to the mailing address identified in Unit I.C.2. These electronic submissions will be accepted in WordPerfect or ASCII file format. Avoid the use of special characters and any form of encryption.

2. *By mail*. Send your comments to: Public Information and Records Integrity Branch (PIRIB) (7502C), Office of Pesticide Programs (OPP), Environmental Protection Agency, 1200 Pennsylvania Ave., NW., Washington, DC 20460–0001, Attention: Docket ID number OPP–2003–0366.

3. *By hand delivery or courier*. Deliver your comments to: Public Information and Records Integrity Branch (PIRIB), Office of Pesticide Programs (OPP), Environmental Protection Agency, Rm. 119, Crystal Mall #2, 1921 Jefferson Davis Hwy., Arlington, VA, Attention: Docket ID number OPP–2003–0366. Such deliveries are only accepted during the docket's normal hours of operation as identified in Unit I.B.1.

D. How Should I Submit CBI to the Agency?

Do not submit information that you consider to be CBI electronically through EPA's electronic public docket or by e-mail. You may claim information that you submit to EPA as CBI by marking any part or all of that information as CBI (if you submit CBI on disk or CD ROM, mark the outside of the disk or CD ROM as CBI and then identify electronically within the disk or CD ROM the specific information that is CBI). Information so marked will not be disclosed except in accordance with procedures set forth in 40 CFR part 2.

In addition to one complete version of the comment that includes any information claimed as CBI, a copy of the comment that does not contain the information claimed as CBI must be submitted for inclusion in the public docket and EPA's electronic public docket. If you submit the copy that does not contain CBI on disk or CD ROM, mark the outside of the disk or CD ROM clearly that it does not contain CBI. Information not marked as CBI will be included in the public docket and EPA's electronic public docket without prior notice. If you have any questions about CBI or the procedures for claiming CBI, please consult the person listed under **FOR FURTHER INFORMATION CONTACT.**

E. What Should I Consider as I Prepare My Comments for EPA?

You may find the following suggestions helpful for preparing your comments:

1. Explain your views as clearly as possible.
2. Describe any assumptions that you used.
3. Provide copies of any technical information and/or data you used that support your views.
4. If you estimate potential burden or costs, explain how you arrived at the estimate that you provide.
5. Provide specific examples to illustrate your concerns.
6. Make sure to submit your comments by the deadline in this notice.
7. To ensure proper receipt by EPA, be sure to identify the docket ID number assigned to this action in the subject line on the first page of your response. You may also provide the name, date, and **Federal Register** citation.

II. What Action is the Agency Taking?

EPA has received a pesticide petition as follows proposing the establishment and/or amendment of regulations for residues of a certain pesticide chemical in or on various food commodities under section 408 of the Federal Food, Drug, and Cosmetic Act (FFDCA), 21 U.S.C. 346a. EPA has determined that this petition contains data or information regarding the elements set forth in FFDCA section 408(d)(2); however, EPA has not fully evaluated the sufficiency of the submitted data at this time or whether the data support granting of the petition. Additional data may be needed before EPA rules on the petition.

List of Subjects

Environmental protection, Agricultural commodities, Feed additives, Food additives, Pesticides and pests, Reporting and recordkeeping requirements.

Dated: December 5, 2003.

Peter Caulkins,

Acting Director, Registration Division, Office of Pesticide Programs.

Summary of Petition

The petitioner's summary of the pesticide petition is printed below as required by FFDCA section 408(d)(3). The summary of the petition was prepared by Arvesta Corporation and represents the view of the petitioner. The petition summary announces the availability of a description of the analytical methods available to EPA for the detection and measurement of the pesticide chemical residues or an explanation of why no such method is needed.

Arvesta Corporation

PP 1F6342

EPA has received a pesticide petition (1F6342) from Arvesta Corporation, 100 First Street, Suite 1700, San Francisco, CA 94105 proposing, pursuant to section 408(d) of the Federal Food, Drug, and Cosmetic Act (FFDCA), 21 U.S.C. 346a(d), to amend 40 CFR part 180, by establishing a tolerance for residues of clothianidin in or on the raw agricultural commodity apples and pears at 1.0 parts per million (ppm). EPA has determined that the petition contains data or information regarding the elements set forth in section

408(d)(2) of the FFDCA; however, EPA has not fully evaluated the sufficiency of the submitted data at this time or whether the data support granting of the petition. Additional data may be needed before EPA rules on the petition.

A. Residue Chemistry

1. *Plant metabolism*. In plants, the metabolism of clothianidin is adequately understood for the purposes of establishing these proposed tolerances. Unchanged, parent clothianidin was the predominant residue in all crop matrices (14.4% to 64.5% in corn, 66.1% to 96.6% in tomatoes, 4.3% to 24.4% in sugar beets and 24.3% to 63.3% in apples), with the exception of sugar beet leaves. In sugar beet leaves, the main components were the methylguanidine and thiazolylmethylguanidine metabolites, accounting for 28.6% and 27.7% respectively. All metabolites found in plants were also found in the animal metabolism studies. In animals, parent clothianidin was the major component in liver, muscle and fat. Based on the available metabolism data, parent clothianidin, TZG, TZU, and ATMG-Pyr are proposed to be considered as the residues of concern in livestock matrices.

2. *Analytical method*. In plants and plant products, the residue of concern, parent clothianidin, can be determined using high performance liquid chromotography (HPLC) with electrospray mass spectroscopy (MS/MS) detection. In an extraction efficiency testing, the plant residues method has also demonstrated the ability to extract aged clothianidin residue.

In animal matrices, the residues parent clothianidin, TZG, TZU, and ATMG-Pyr can also be determined using HPLC with electrospray MS/MS detection. In an extraction efficiency testing, the animal residues method has also demonstrated the ability to extract aged clothianidin, TZG, TZU, and ATMG-Pyr residues.

Although, the plant and animal residues LC-MS/MS method is highly suitable for enforcement method, an LC-UV method has also been developed which is suitable for enforcement (monitoring) purposes in all relevant matrices.

3. *Magnitude of residues*. For apples, a total of 13 field trials were conducted to evaluate the magnitude of the residues of clothianidin in apples. Apple trees were treated with clothianidin at a rate of 0.2 lb active ingredient (a.i./acre). The highest average field trial residue found was 0.174 ppm in apple at 7 days pre-harvest interval (PHI). The apple processing study conducted at the exaggerated rate of 3X rate indicated no concentration in any processed commodities including apple juice and wet pomace. A residue decline study was conducted, and an estimated half-life value was obtained at 5.9 days.

For pears, a total of seven field trials were conducted to determine the residue level in pear following one single treatment with clothianidin at a rate of 0.2 lb a.i./acre. The highest average field trial clothianidin residue was 0.163 ppm in pears. A residue decline study was conducted, and an estimated half-life value was obtained at 11.5 days for pears.

B. Toxicological Profile

1. *Acute toxicity*. The acute oral lethal dose $(LD)_{50}$ was >5,000 milligrams/kilogram body weight (mg/kg bwt) for both male and female rats. The acute dermal LD_{50} was greater than 2,000 mg/kg bwt in rats. The 4–hour inhalation liquid chromatography $(LC)_{50}$ 6.14 milligrams per liter (mg/L) for male and female rats. Clothianidin was not irritating to rabbit skin or eyes and did not cause skin sensitization in guinea pigs.

2. *Genotoxicty*. Extensive mutagenicity studies were conducted with clothianidin. Based on the weight of evidence clothianidin was considered negative for genotoxicity.

3. *Reproductive and developmental toxicity*. In a two-generation reproduction study, rats were administered dietary levels of 0, 150, 500 and 2,500 ppm. The no observed adverse effect level (NOAEL) for reproductive parameters was 2,500 ppm. The NOAEL for developmental effects was 500 ppm based on decreased pup weights and the parental NOAEL and 150 ppm based on the decreased body weights.

A developmental toxicity study was conducted in rats with clothanidin using dose levels of 0, 10, 50 and 125 mg/kg bwt by gavage. The NOAEL for maternal toxicity was established at 10 mg/kg bwt and for developmental effects it was >125 mg/kg bwt. Additionally, a developmental toxicity was conducted with rabbits treated orally by gavage at 0, 10, 25, 75 and 100 mg/kg bwt. The NOAEL for maternal toxicity was 10 mg/kg bwt and for developmental toxicity it was 75 mg/kg bwt.

Developmental toxicity studies showed no primary developmental toxicity and no teratogenic potential was evident.

4. *Subchronic toxicity*. 90–day feeding studies were conducted in rats and dogs. The rat study was conducted at dietary levels of 0, 150, 500 and 3,000 ppm and the dog study was conducted at 0, 325, 650 and 1,500 ppm. The NOAELs were established at 500 ppm for rat and 650 ppm for the dog.

5. *Chronic toxicity*. A two–year combined rat chronic/oncogenicity conducted at dietary levels of 0, 150, 500, 1,500 and 3,000 ppm demonstrated a NOAEL of 150 ppm based on reduced weight gains and non-neoplastic histomorphological changes. A 78–week mouse oncogenicity study conducted at dose levels of 0, 100, 350, 1,250, and 2,000, and 1,800 ppm for males and females, respectively, revealed NOAEL of 350 ppm based on reduced body weight gains and increased incidence of hypercellular hypertrophy. No evidence of oncogenicity was seen in the rat or the mice. A 52–week chronic toxicity study in dogs conducted at dietary levels of 0, 325, 650, 1,500 and 2,000 ppm revealed on overall NOAEL of 325 ppm based on slight decrease in ALT.

6. *Animal metabolism*. The nature of the clothianidin residue in livestock is adequately understood. In animals, parent clothianidin was the major component in liver, muscle and fat. Based on the available metabolism data, parent clothianidin, TZG, TZU, and ATMG-Pyr are proposed to be considered as the residues of concern in livestock matrices.

7. *Metabolite toxicology*. Eight *in vivo* metabolites of clothianidin identified in the rat were investigated for acute oral endpoint mutagenic activity. None of the metabolites were mutagenic either with or without activation and the lethal dose $(LD)_{50}$ values range from <500 to >2,000 mg/kg, showing low to moderate toxicity.

8. *Endocrine disruption*. All guideline studies conducted to characterize toxicological profile showed no endocrine related toxicity or tumorgenicity. No effects on T_3, T_4, TSH were observed in the subchronic rat study. In a two-generation reproduction study in rat; and rat and rabbit teratology studies, clothianidin did not show reproductive or teratogenic effects. The extensive data base shows that clothianidin has no endocrine properties.

C. Aggregate Exposure

1. *Dietary exposure*. The acute reference dose (aRfD) of 0.6 mg/kg bwt/day (acute NOAEL with a 100–fold uncertainty factor) was used to assess acute dietary exposure.

Seed treatment use. Bayer has conducted an acute dietary exposure Tier 2 assessment estimating the percent of the aRfD and corresponding margins

of exposure (MOE) for the overall U.S. population (all seasons) and the following subpopulations: all infants (<1 year), non-nursing infants (<1 year), children (1–6 years), children (7–12 years), females (13–19 years), females (13–50 years), males (13–19 years), males (>20 years), and seniors (>55 years). In this refined Tier 2 analysis, all evaluated population subgroups had an exposure equal to 0% of the aRfD with a corresponding MOE of >1 million at the 95th percentile.

Foliar application use (pome fruit). Tomen has conducted an acute dietary exposure Tier 1 analysis with Dietary Exposure Evaluation Model (DEEM) using proposed tolerance of 1 ppm, 100% crop treated and no adjustment of processing factor for the overall U.S. populations and the following subpopulations: all infants, nursing infants (<1 year), non-nursing infants (<1 year), children (1–6 years), children (7–12 years), and females (13–50 years). The results of Tier 1 analysis from foliar use of pome fruit indicated that the highest exposure never exceeds 5.42% of the aRfD at the 95th percentile.

The chronic reference dose (cRfD) of 0.097 mg/kg bwt/day (chronic NOAEL with a 100–fold uncertainty factor) was used to assess chronic dietary exposure.

Seed treatment use. Bayer's chronic dietary analysis estimated the percent of the cRfD and corresponding MOE for the overall U.S. population (all seasons) and the following subpopulations: all infants (<1 year), non-nursing infants (<1 year), children (1–6 years), children (7–12 years), females (13–19 years), females (13–50 years), males (13–19 years), males (>20 years), and seniors (>55 years). In this analysis, all evaluated population subgroups had an exposure equal to 0% of the cRfD. The corresponding MOE was >1 million.

Foliar application use. Tomen has conducted a chronic Tier 1 analysis and the results indicated that the highest exposure never exceeds 8.7% of the cRfD at the 95th percentile.

i. *Food. See* above discussion.

ii. *Drinking water.* For drinking water, the models SCI-GROW (ground water), and generic expected environmental concentration (GENEEC) (surface water), were selected to calculate the potential exposure of TM–444 in drinking water. Both short-term (acute) and long-term (chronic) exposures were estimated with respect to foliar uses on apples and pears. The predicted ground water concentrations for foliar application of apples and pears were 1.17 and 1.30 μ/L, respectively. The highest estimated acute and chronic exposures from surface water were 9.10 and 3.07 μ/L, respectively. Based on the standard exposure scenarios for drinking water (70kg adult- 2L/day; 10 kg child- 1L/day), the potential human exposure and risk can be estimated. Using the acute (0.60 mg/kg/day) and chronic (0.097 mg/kg/day) reference doses (RfD), the human risk from exposure to TM-444 in drinking water is estimated. The risk to adults and children from ground water exposure ranged from 0.006 to 0.019% of the acute RfD and from 0.038 to 0.134% of the chronic RfD; from surface water, the estimated risk ranged from 0.039% to 0.152% of the acute RfD and 0.081 to 0.316% of the chronic RfD respectively.

2. *Non-dietary exposure.* Clothianidin is currently not registered for use on any residential non-food site. Therefore, residential exposure to clothianidin residues will be through dietary exposure only.

D. Cumulative Effects

There is no information available to indicate that toxic effects produced by clothianidin are cumulative with those of any other compound.

E. Safety Determination

1. *U.S. population.* Using the conservative exposure assumptions described above and based on the completeness of the toxicity data, it can be concluded that total aggregate exposure to clothianidin from all proposed uses will be less than 9% of the RfD for the overall U.S. population. All evaluated population subgroups had an exposure less than 9% of the RfD. EPA generally has no concerns for exposures below 100% of the RfD, because the RfD represents the level at or below which daily aggregate exposure over a lifetime will not pose appreciable risks to human health. Thus, Arvesta believes that it can be concluded that there is a reasonable certainty that no harm will result from aggregate exposure to clothianidin residues.

2. *Infants and children.* In assessing the potential for additional sensitivity of infants and children to residues of clothianidin, the data from developmental toxicity studies in both the rat and rabbit, a two-generation reproduction study in rats and a developmental neurotoxicity study in rats have been considered.

The developmental toxicity studies evaluate potential adverse effects on the developing animal resulting from pesticide exposure of the mother during prenatal development. The reproduction study evaluates effects from exposure to the pesticide on the reproductive capability of mating animals through two generations, as well as any observed systemic toxicity.

The developmental neurotoxicity studies evaluate the neurobehavioral and neurotoxic effects on the developing animal resulting from the exposure of the mother. FFDCA section 408 provides that EPA may apply an additional uncertainty factor for infants and children based on the threshold effects to account for prenatal and postnatal effects and the completeness of the toxicity data base. Based on the current toxicological data requirements the toxicology data base for clothianidin relative to prenatal and postnatal development is complete, including the developmental neurotoxicity study. None of the studies indicated the offsprings to be more sensitive. All effects were secondary to severe maternal toxicity. The RfD for clothianidin was calculated using the NOAEL of 9.7 mg/kg bw/day from the two–year chronic/oncogenicity study. This NOAEL is lower than the NOAEL from the two–generation reproduction study, the developmental studies, and the developmental neurotoxicity study. Moreover, using a toxicologically justified UF of 100, the RfD for a non-oncogenic clothianidin was established at a level 0.097 mg/kg/day, a value that offers a measure of safety that is the highest among the other alternative compounds for control of apple and pear pests.

F. International Tolerances

No CODEX maximum residue levels (MRL's) have been established for residues of clothianidin on any crops at this time.

[FR Doc. 03–32205 Filed 12–30–03; 8:45 am]
BILLING CODE 6560–50–S

ENVIRONMENTAL PROTECTION AGENCY

[OW–FRL–7605–2]

National Recommended Water Quality Criteria for the Protection of Human Health

AGENCY: Environmental Protection Agency.

ACTION: Notice of availability.

SUMMARY: Pursuant to section 304(a) of the Clean Water Act (CWA), the Environmental Protection Agency (EPA) is announcing the availability of updated national recommended water quality criteria for the protection of human health for the following fifteen pollutants: chlorobenzene; cyanide; 1,2-dichlorobenzene; 1,4-dichlorobenzene; 1,1-dichloroethylene; 1,3-

dichloropropene; endrin; ethylbenzene; hexachlorocyclopentadiene; lindane; thallium; toluene; 1,2-transdichloroethylene; 1,2,4-trichlorobenzene; and vinyl chloride.

The criteria are based on EPA's 2000 methodology for deriving human health water quality criteria and supercede criteria for these chemicals that the Agency published before this notice.

EPA's recommended section 304(a) water quality criteria are guidance to States and authorized Tribes in adopting water quality standards for protecting human health. They are also a scientific basis for developing controls of discharges or releases of pollutants. They are guidance to EPA for promulgating Federal regulations under CWA section 303(c), when such action is necessary.

Under the CWA and its implementing regulations, States and authorized Tribes are to adopt water quality criteria to protect designated uses (*e.g.,* public water supply, recreational use, industrial use). EPA's recommended human health water quality criteria do not substitute for the CWA or regulations, nor are they regulations themselves. Thus, EPA's recommended criteria do not impose legally binding requirements. States and authorized Tribes have the discretion to adopt, where appropriate, other scientifically defensible water quality standards that differ from these recommendations.

ADDRESSES: Copies of documents specifically referenced in this notice and scientific views received are in Docket ID No. OW–2002–0054. Materials in the public docket are available for public viewing at the Water Docket in the EPA Docket Center, (EPA/DC) EPA West, Room B102, 1301 Constitution Ave., NW., Washington, DC. The EPA Docket Center Public Reading Room is open from 8:30 a.m. to 4:30 p.m., Monday through Friday, excluding legal holidays. The telephone number for the Public Reading Room is (202) 566–1744, and the telephone number for the Office of Water Docket is (202) 566–2426. A reasonable fee will be charged for copies. An electronic version of the public docket is available through EPA's electronic public docket and comment system, EPA Dockets, at *http://www.epa.gov/edocket/.* Once in the system, select ''search,'' then key in the appropriate docket identification number.

FOR FURTHER INFORMATION CONTACT: Cindy Roberts, Health and Ecological Criteria Division (4304T), U.S. EPA, Ariel Rios Building, 1200 Pennsylvania Ave., NW., Washington, DC 20460; (202) 566–1124; *roberts.cindy@epa.gov.*

SUPPLEMENTARY INFORMATION:

General Information

A. Interested Entities

Entities potentially interested in today's notice are those that produce, use, or regulate chlorobenzene; cyanide; 1,2-dichlorobenzene; 1,4-dichlorobenzene; 1,1-dichloroethylene; 1,3-dichloropropene; endrin; ethylbenzene; hexachlorocyclopentadiene; lindane; thallium; toluene; 1,2-transdichloroethylene; 1,2,4-trichlorobenzene; and vinyl chloride. Categories and entities interested in today's notice include:

Category	Examples of interested entities
States, Authorized Tribes, and Jurisdictional Governments.	NPDES Authorized States, Tribes and Jurisdictions.
Industry	Industries discharging pollutants to surface waters or to publically-owned treatment works discharging pollutants to surface waters.
Municipalities	Publically-owned treatment works discharging pollutants to surface waters.

This table is not intended to be exhaustive, but rather provides a guide for readers regarding entities likely to be interested in this notice. This table lists the types of entities that EPA is now aware could potentially be interested in this notice. Other types of entities not listed in the table could also be interested.

B. How Can I Get Copies of the National Recommended Water Quality Criteria for the Protection of Human Health and Other Related Information?

1. *Docket.* EPA has established an official public docket for this notice under Docket ID No. OW–2002–0054. The official public docket consists of the documents specifically referenced in this notice, any public scientific views received, and other information related to this announcement. Although a part of the official docket, the public docket does not include Confidential Business Information (CBI) or other information whose disclosure is restricted by statute. The official public docket is the collection of materials that is available for public viewing at the Water Docket in the EPA Docket Center, (EPA/DC) EPA West, Room B102, 1301 Constitution Ave., NW., Washington, DC. The EPA Docket Center Public Reading Room is open from 8:30 a.m. to 4:30 p.m., Monday through Friday, excluding legal holidays. The telephone number for the Public Reading Room is (202) 566–1744, and the telephone number for the Office of Water Docket is (202) 566–2426. A reasonable fee will be charged for copies.

2. *Electronic Access.* You may access this Federal Register document electronically through the EPA Internet under the ''Federal Register'' listings at *http://www.epa.gov/fedrgstr/.*

An electronic version of the public docket is available through EPA's electronic public docket and comment system, EPA Dockets. You may use EPA Dockets at *http://www.epa.gov/edocket/* to view scientific views submitted by the public, access the index listing of the contents of the official public docket, and to access those documents in the public docket that are available electronically. Although not all docket materials may are available electronically, you may still access any of the publicly available docket materials through the docket facility identified in section B.1. Once in the system, select ''search,'' then key in the appropriate docket identification number.

Table of Contents

I. Background Information
A. What are human health water quality criteria?
B. How is the 2000 Human Health Methodology used?
C. How does EPA use its recommended water quality criteria?
D. What is the relationship between 304 (a) criteria and your State or Tribal water quality standards?
E. May States and authorized Tribes adopt water quality criteria based on local conditions?
F. How does the review and approval of State and Tribal water quality standards affect water quality criteria adopted by States and authorized Tribes?
II. Human Health Water Quality Criteria Revisions
A. What are the criteria revisions?
B. What are EPA's responses to the scientific views received on the criteria revisions?
C. Were other views submitted?

I. Background Information

A. What Are Human Health Water Quality Criteria?

Human health water quality criteria are numeric values that describe ambient water concentrations that protect human health from the harmful effects of pollutants in ambient water. These criteria are developed under CWA section 304(a) and are based solely on data and scientific judgments about the relationship between pollutant

concentrations and environmental and human health effects. Human health water quality criteria do not reflect consideration of economic impacts or the technological feasibility of meeting the chemical concentrations in ambient water.

CWA section 304(a)(1) requires EPA to develop and publish and, from time to time, revise criteria for water quality that accurately reflect the latest scientific knowledge. EPA's recommended section 304(a) water quality criteria provide guidance to States and authorized Tribes in adopting water quality standards for protection of human health and can be used as a scientific basis for developing controls of discharges or releases of pollutants. The criteria also provide guidance to EPA when promulgating Federal regulations under CWA section 303(c), when such action is necessary.

B. How Is the 2000 Human Health Methodology Used?

In November 2000, EPA published the revised *Methodology for Deriving Ambient Water Quality Criteria for the Protection of Human Health (2000)* (EPA–822–B–00–004, October 2000; hereafter referred to as the ''2000 Human Health Methodology''). Before this, the Agency developed recommended human health water quality criteria using the 1980 *Guidelines and Methodology Used in the Preparation of Health Effects Assessment Chapter of the Consent Decree Water Criteria Documents* (45 FR 79347, called the ''1980 Methodology''). The 2000 Human Health Methodology incorporates significant scientific advances that have occurred over the last two decades, particularly in the areas of cancer and noncancer risk assessments (using new information, procedures, and published Agency guidelines), exposure assessments (using new studies on human intake and exposure patterns, and new Agency guidelines), and methodologies to estimate bioaccumulation in fish. EPA will use the 2000 Human Health Methodology to develop new section 304(a) water quality criteria for additional pollutants and to revise existing section 304(a) water quality criteria. The 2000 Human Health Methodology is an important part of EPA's efforts to improve the quality of the Nation's waters and strengthen the overall scientific basis of water quality criteria. Furthermore, the 2000 Human Health Methodology will help States and authorized Tribes address their unique water quality issues and make risk management decisions to protect human health consistent with CWA section 303(c). The 2000 Human Health Methodology provides a detailed means for developing water quality criteria, including systematic procedures for evaluating cancer risk, noncancer health effects, human exposure, and bioaccumulation potential in fish.

C. How Does EPA Use Its Recommended Water Quality Criteria?

Water quality standards generally consist of designated uses (*e.g.*, public water supply, recreational use, industrial use), water quality criteria to protect those uses, a policy for antidegradation (that maintains and protects existing uses and water quality conditions), and general policies for application and implementation of water quality standards. As part of the water quality standards triennial review process defined in CWA section 303(c)(1), States and authorized Tribes are responsible for maintaining and revising water quality standards. Section 303(c)(1) requires States and authorized Tribes to review and, if appropriate, modify their water quality standards at least once every three years. EPA's recommended section 304(a) water quality criteria may form the basis for Agency decisions, both regulatory and non-regulatory, until they are superseded by EPA's publication of new or revised section 304(a) water quality criteria. These recommended water quality criteria are used in the following ways:

(1) as guidance to States and authorized Tribes in adopting water quality standards,

(2) as guidance to EPA in promulgating Federal water quality standards,

(3) to interpret a State's narrative water quality standard (in the absence of a State adopted numeric standard) in order to establish National Pollutant Discharge Elimination System (NPDES) water quality-based permit limits, and

(4) for all other purposes of CWA section 304(a).

Two distinct purposes are served by the section 304(a) water quality criteria. The first is as guidance to the States and authorized Tribes in the development and adoption of water quality criteria that will protect designated uses for their waters. The second is as guidance for promulgation of Federal water quality criteria for States and authorized Tribes, when such action is necessary under the terms of the CWA.

D. What Is the Relationship Between 304(a) Criteria and Your State or Tribal Water Quality Standards?

States and authorized Tribes must adopt water quality criteria that protect designated uses pursuant to CWA section 303(c)(2)(A). Protective criteria are based on a sound scientific rationale and must contain sufficient parameters or components to protect the designated uses. Water quality criteria may be expressed in either narrative or numeric form. States and authorized Tribes may use one of four approaches when adopting water quality criteria:

(1) Establish numerical values based on section 304(a) recommended water quality criteria,

(2) Modify the section 304(a) recommended water quality criteria to reflect site-specific conditions,

(3) Use other scientifically defensible methods to derive protective water quality criteria, and

(4) Establish narrative water quality criteria where numeric criteria cannot be determined or to supplement numeric water quality criteria.

EPA encourages States and authorized Tribes to use EPA's section 304(a) water quality criteria as guidance when adopting water quality standards consistent with CWA section 303(c) and the Federal regulations at 40 CFR part 131.

E. May States and Authorized Tribes Adopt Water Quality Criteria Based on Local Conditions?

EPA encourages States and authorized Tribes to develop and adopt water quality criteria to reflect local and regional conditions. In the 2000 Human Health Methodology, EPA published default values for risk level, fish intake, drinking water intake, and body weight for use by EPA, States or authorized Tribes in deriving human health water quality criteria. EPA believes these default values result in water quality criteria that protect the general population. States and authorized Tribes may also use these default values for their own water quality criteria, or they may use other values more representative of local conditions if they have data supporting the alternative values.

F. How Does the Review and Approval of State and Tribal Water Quality Standards Affect Water Quality Criteria Adopted by States and Authorized Tribes?

In 2000, EPA published new regulations addressing its review and approval of water quality standards adopted by States and authorized Tribes (see 65 FR 24642; April 27, 2000.) Under the new regulations, (codified at 40 CFR 131.21(c)–(f)), State or authorized Tribal water quality standards that were adopted by law or regulation before May 30, 2000, are in

effect for CWA purposes unless superseded by replacement Federal water quality standards (see 40 CFR 131.21(c)). However, under the new regulation, State or authorized Tribal water quality criteria adopted into State or Tribal law or regulation on or after May 30, 2000, are in effect for CWA purposes only after EPA approves any new or revised water quality standards. Therefore, new or revised water quality criteria adopted by States or authorized Tribes would not take effect for CWA purposes until after EPA approves them.

II. Human Health Water Quality Criteria Revisions

A. What Are the Criteria Revisions?

Today, EPA is announcing the availability of national recommended water quality criteria for the protection of human health for the following fifteen pollutants: Chlorobenzene; cyanide; 1,2-dichlorobenzene; 1,4-dichlorobenzene; 1,1-dichloroethylene; 1,3-dichloropropene; endrin; ethylbenzene; hexachlorocyclopentadiene; lindane; thallium; toluene; 1,2-transdichloroethylene; 1,2,4-trichlorobenzene; and vinyl chloride. The updated criteria are based on EPA's new methodology for deriving human health water quality criteria (i.e., the 2000 Human Health Methodology), and they supercede criteria previously published by the Agency.

These criteria represent partial updates of the section 304(a) water quality criteria, as described in both the draft Methodology revisions and the **Federal Register** notice that accompanied the final Methodology (65 FR 66444; November 3, 2000). EPA believes that updating a limited number of components for which there are available data or improved science (i.e., a partial update) is a reasonable and efficient way to more frequently publish revised section 304(a) water quality criteria. EPA has also described its process for publishing revised criteria [see *National Recommended Water Quality Criteria—Correction* (64 FR 19781; or EPA 822–Z–99–001) or the **Federal Register** notice for the final Methodology (65 FR 66444)].

Because recalculation of these fifteen criteria resulted in significant changes, EPA issued a **Federal Register** notice soliciting scientific views on the criteria on December 27, 2002 (67 FR 79091). This **Federal Register** Notice was issued in accordance with the published process for revising section 304(a) water quality criteria. EPA considered the scientific views received in response to the December 27, 2002, **Federal Register** notice. All criteria concentrations in this Notice are the same as those published in the December 27, 2002 (67 FR 79091), with the exception of the criterion for protecting human health from consumption of organism only for cyanide. (See section B, response to Scientific view b, Incidental ingestion should be considered when deriving human health water quality criteria for toxic pollutants with a low BCF.) Table II–1 presents the updated criteria, as well as the components used in their derivation (*e.g.*, bioconcentration factor, relative source contribution).

TABLE II–1.—REVISED HUMAN HEALTH WATER QUALITY CRITERIA

Priority pollutant	CAS No.	Human health water quality criteria for consumption of:		Components
		Water + organism (ug/L)	Organism only (ug/L)	
Thallium	7440280	0.24	0.47	RfD = 6.8E–5, BCF = 116 (RfD listed is for thallium (I) sulfate 7446–18–6), RSC = 20%, FI = 17.5.
Cyanide	57125	140	*140	RfD = 2E–2, BCF = 1, RSC = 20%, FI = 17.5.
Chlorobenzene	108907	130	1,600	RfD = 2E–2, BCF = 10.3, RSC = 20%, FI = 17.5.
1,1-Dichloroethylene	75354	330	7,100	RfD = 5E–2, RSC = 20%, BCF = 5.6, FI = 17.5.
1,3-Dichloropropene	542756	0.34	21	*q1 = 0.1, BCF = 1.9, FI = 17.5.
Ethylbenzene	100414	530	2,100	RfD = 1E–1, BCF = 37.5, RSC = 20%, FI = 17.5.
Toluene	108883	1,300	15,000	RfD = 2E–1, BCF = 10.7, RSC = 20%, FI = 17.5.
1,2-Trans-Dichloro-ethylene	156605	140	10,000	RfD = 2E–2, BCF = 1.58, RSC = 20%, FI = 17.5.
Vinyl Chloride	75014	0.025	2.4	*q1 = 1.4 (LMS exposure from birth), BCF = 1.17, FI = 17.5.
1,2-Dichlorobenzene	95501	420	1,300	RfD = 9E–2, BCF = 55.6, RSC = 20%, FI = 17.5.
1,4-Dichlorobenzene	106467	63	190	ADI = 1.34E–2, (ADI for 1,2-DCB used), BCF = 55.6, RSC = 20%, FI = 17.5.
Hexachlorocyclo-pentadiene	77474	40	1,100	RfD = 6E–3, BCF = 4.34, RSC = 20%, FI = 17.5.
1,2,4-Trichloro-benzene	120821	35	70	RfD = 1E–2, BCF = 114, RSC = 20 %, FI = 17.5.
gamma-BHC (Lindane)	58899	0.98	1.8	RfD= 3E–4, BCF = 130, RSC= 20%, FI = 17.5.
Endrin	72208	0.059	0.060	RfD = 3E–4, BCF = 3970, RSC = 20%, FI = 17.5.

RfD = reference dose; q1* = cancer potency factor; ADI = allowable daily intake; BCF = bioconcentration factor;
RSC = relative source contribution; FI = fish intake

*This recommended water quality criterion is expressed as total cyanide, even though the IRIS RfD we used to derive the criterion is based on free cyanide. The multiple forms of cyanide that are present in ambient water have significant differences in toxicity due to their differing abilities to liberate the CN-moiety. Some complex cyanides require even more extreme condition than refluxing with sulfuric acid to liberate the CN-moiety. Thus, these complex cyanides are expected to have little or no 'bioavailability' to humans. If a substantial fraction of the cyanide present in a water body is present in a complexed form (*e.g.*, $Fe_4[Fe(CN)_6]_3$), this recommended criterion may be over conservative.

EPA received much support for revising criteria based on partially updated components of the criteria equations as a way of increasing the frequency of scientific improvements to the nationally recommended criteria. For EPA to consider a water quality criterion revision based on a partial update to be acceptable, the components being used in the update should be comprehensive (*e.g.*, a revised reference dose or cancer dose-response assessment), stand alone, and be based on new national or local data. The recalculation of all fifteen water quality criteria integrates the updated national default freshwater/estuarine fish consumption rate of 17.5 grams/day. Thirteen of the criteria were calculated using a previously-determined relative source contribution (RSC) value from the national primary drinking water standards for the same chemicals. EPA also incorporated into the recalculations

a new cancer potency factor (q1*) for 1,3-dichloropropene and vinyl chloride, and a new reference dose (RfD) for 1,1-dichloroethylene, hexachlorocyclopentadiene, and lindane. These values were already published in the Agency's Integrated Risk Information System (IRIS). Both an RfD and q1* are available in IRIS for 1,3-dichloropropene and vinyl chloride. Because it resulted in more protective criteria, EPA used the q1* to derive the criteria in these cases rather than the RfD.

We derived the water quality criteria presented here with bioconcentration factors (BCFs) or field-measured bioaccumulation factors (BAFs) based on the 1980 Methodology. These values are consistent with those used to promulgate human health water quality criteria for priority toxic pollutants in rules such as the 1992 National Toxics Rule and the 2000 California Toxics Rule.

B. What Are EPA's Responses to the Scientific Views Received on the Criteria Revisions?

This section summarizes the scientific views received in response to the December 27, 2002, **Federal Register** Notice. It also presents EPA's responses to the scientific views.

1. 2000 Human Health Methodology

a. Support application of EPA's new methodology for deriving human health water quality criteria.

Scientific View—One submitter expressed support of EPA's application of the new human health methodology, including using more current estimates of daily fish intake, relative source contribution (for noncarcinogenic effects), and updated toxicological data.

Response—EPA acknowledges and appreciates the submitter's support.

b. Incidental ingestion should be considered when deriving human health water quality criteria for toxic pollutants with a low BCF.

Scientific View—One submitter indicated that EPA should consider acute and chronic effects from incidental ingestion of water when deriving human health water quality criteria associated with the consumption of ''organisms only'' for toxic pollutants with a low BCF. It is possible to exceed the RfD based on chronic toxicity when incidental ingestion occurs at the criterion concentration established for protecting human health for consumption of organisms only. Before finalizing the criteria revisions, EPA should compare the potential for acute toxicity from incidental ingestion of acutely toxic substances to the threshold for acute toxicity. The submitter uses cyanide as an example of a chemical for which acute and chronic effects from incidental ingestion of water should be considered as we develop human health water quality criteria.

Response—In developing the 2000 Human Health Methodology, EPA reviewed estimates of incidental water ingestion rates averaged over time. Based on this review, EPA generally believes that the averaged amount is negligible and will not impact the chemical criteria values that represent both drinking water and fish ingestion, unless (as indicated in the 2000 Methodology) the chemical exhibits minimal or no bioaccumulation potential.

EPA expects that the cyanide criterion for consumption of organisms only established based on the 2000 Human Health Methodology is generally protective of human health. However, cyanide is an acutely toxic substance (with a low bioaccumulation potential), and the resulting criterion of 16,000 ug/L derived for consumption of organism only may not protect humans from acutely toxic effects. Thus, EPA considers it prudent health policy to establish the criterion concentration for consumption of organisms only at the same level as the value for protecting human health for consumption of water and organisms (140 ug/L). The EPA's IRIS RfD that we used to derive the criterion is based on free cyanide. If a substantial fraction of the cyanide present in a water body is present in a complexed form (*e.g.*, $Fe_4[Fe(CN)_6]_3$), this recommended criterion may be overly conservative. State and authorized Tribes, however, have the discretion to modify section 304(a) criteria to reflect site-specific conditions.

c. Future updates of human health water quality criteria should consider additional exposure routes.

Scientific view—A submitter supported EPA's plans to include additional exposure routes resulting from recreational activities (*e.g.*, dermal, inhalation).

Response—EPA appreciates the submitter's support. As stated in the published draft methodology revisions (65 FR 66444; November 3, 2000) and in *Response to Peer Review Comments on Draft Revisions to the Methodology for Deriving Ambient Water Quality Criteria for the Protection of Human Health* (EPA–822–R–00–009, August 2000), EPA acknowledges that the potential for inhalation and dermal exposures exist, and an approach to account for them in the context of developing individual water quality criteria is appropriate. EPA intends to refine the 2000 Human Health Methodology in the future to incorporate guidance on inhalation and dermal exposures.

d. National default BCFs and BAFs should not be used in the derivation of water quality criteria.

Scientific view—A submitter stated that the 15 proposed human health water quality criteria are based, in part, on using national default BCFs or BAFs without demonstrating that a statistically and ecologically significant correlation exists between the compound in the water column and levels found in fish tissues. The submitter uses methylmercury as an example of a chemical for which that correlation has not yet been demonstrated. As a consequence, the submitter strongly objects to the use of BCFs or BAFs in deriving the criteria. The submitter further stated that EPA should notify States and authorized Tribes not to adopt the revised criteria into State or Tribal standards until they can confirm a statistically significant (and important) relationship between water column concentrations and fish tissue concentrations.

Response—Using national default BCFs for water quality criteria began in 1980 and is necessary to ensure that criteria related to human ingestion of fish and shellfish will be protective of the consumer human populations who eat them. The BCF values determined for the water quality criteria represented the best scientific information available at the time. BCFs for nonionic organic chemicals that were determined from Veith *et al.* (1979) are based on a statistically significant correlation between experimentally determined chemical concentrations in water and fish tissues. We describe in detail the scientific basis for applying this data in the 1980 Ambient Water Quality Criteria National Guidelines (45 FR 79347).

EPA recognizes that many scientific advances have occurred in the area of bioaccumulation since it published the 1980 Methodology. As a result, EPA has revised the bioaccumulation portion of the 1980 Methodology to reflect the current state of science and to improve accuracy in assessing bioaccumulation for setting 304(a) criteria. EPA's *Methodology for Deriving Ambient Water Quality Criteria for Protection of Human Health (2000)* (65 FR 66444; hereafter referred to as the ''2000 Methodology'') contains the revised procedures for incorporating bioaccumulation in ambient water quality criteria (AWQC) and a summary of the key changes. EPA will publish more detailed information on the BAF

methodology in the near future (*Technical Support Document Volume 2: Development of National Bioaccumulation Factors*). We developed the approaches to deriving bioaccumulation factors and applying them in AWQC presented from a process that included extensive review from EPA's Science Advisory Board, peer review workshops, and stakeholder meetings (65 FR 6644).

EPA's framework deriving bioaccumulation factors is designed to account for chemical, biological and ecological attributes. For example, we provide separate procedures for deriving national BAFs depending on the type of chemical (*i.e.*, nonionic organic, ionic organic, inorganic and organometallic). More specifically, EPA's framework recognizes that the derivation of BAFs for organometallic chemicals differs in several ways from procedures for organic chemicals. For example, there are no generic bioaccumulation models that can be used to predict BAFs for organometallic chemicals as a whole; therefore, EPA's preferred approach for deriving national BAFs for such chemicals is to use empirical field data.

EPA took this approach in deriving draft national BAFs for methylmercury (see *Water Quality Criterion for the Protection of Human Health: Methylmercury* (EPA–823–R–01–001, January 2001)). We found the empirically-derived draft methylmercury BAFs to be variable, reflecting the influences of various biotic factors and abiotic factors on methylmercury bioaccumulation that were not well understood at that time. EPA acknowledged that these factors resulted in uncertainty as to the ability of the BAFs to accurately predict bioaccumulation of methylmercury across the waters of the United States. However, in this same document, EPA noted that this is not the case for other highly bioaccumulative pollutants (*i.e.*, non-organometallics). For such pollutants, EPA has methods that improve the predictive capability of empirically-derived or model-predicted BAFs.

When it conducts a full re-evaluation of the human health water quality criteria for the chemicals included in this Notice, EPA will evaluate the best available evidence concerning BAF values. EPA will develop national BAF values to the extent possible given the best available data at the time. Where derivation of National BAFs is not possible, EPA's 2000 Methodology encourages States and authorized Tribes to derive BAFs that are specific to regions or waterbodies as appropriate.

e. Scientific validity of using cancer potency factors or RfDs to define thresholds of unacceptable adverse effects is questionable.

Scientific view—One submitter questioned the scientific validity of using cancer potency factors or RfDs to define thresholds of unacceptable adverse effects. EPA should explicitly address the ''scientific gray area'' that exists between human health effects and RfDs and a benchmark dose or the lowest observed effect level on which an RfD might be based.

Response—As discussed in *Methodology for Deriving Ambient Water Quality Criteria for the Protection of Human Health (2000)* (EPA–822–B–00–004, October 2000), human health water quality criteria are designed to minimize the risk of adverse effects to humans from chronic (lifetime) exposure to substances through the ingestion of drinking water and eating fish from surface waters.

The water quality criteria are based on chronic health effects data (both cancer and noncancer). However, the criteria also are intended to protect against adverse effects not only for the general population over a lifetime of exposure, but also for special populations (*e.g.*, sports fishers, children, elderly) who have an increased risk of receiving a dose that would elicit adverse effects due to their high water- or fish-intake rates or their biological sensitivities. Neither the benchmark dose nor a lowest observed effects level represent a ''threshold'' for response in the human or animal populations. Instead, those values typically are associated with a small proportional response level for the populations in question. EPA acknowledges the possibility that other populations might be more sensitive than those examined.

The Agency fully documents the derivation of its cancer potency factors and RfDs in IRIS. Those values were derived using the Agency guidelines for risk assessment, extensive peer review, and the best available information at the time the values were developed. The Agency continues to review and update the human health effects data in IRIS to ensure it considers the most current literature. That process, however, takes time. The IRIS Web (*http://www.epa.gov/iris/*) site describes EPA's policy on the ''scientific gray areas'' that reflect the use of uncertainty factors to cover certain types of data gaps.

2. EPA Should Adopt a Fish Tissue-Based Criteria in Lieu of the Proposed Water Column Criteria

Scientific view—EPA should derive fish tissue criteria, rather than water column concentrations, for the 15 compounds to avoid the scientific deficiencies related to the inappropriate use of BCFs and BAFs. Compliance monitoring and site-specific adjustments also are simplified when criteria are based on fish-tissue measurements in lieu of water column criteria. The submitter also requested a table of the intermediate fish tissue levels used in (or derived from) the calculation of the proposed water column criteria.

Response—For the most part, EPA has published water column concentrations as their recommended water quality criteria values for protection of human health. The recent exception being the fish tissue concentration for methylmercury (see 66 FR 1344, January 8, 2001). When the new methylmercury criterion was published, EPA withdrew its previous ambient human health water quality criteria for mercury as the recommended section 304(a) water quality criteria. At that time, EPA also recognized that this approach differed from the traditional water column criteria approach and suggested ways to relate the fish and shellfish tissue criterion to concentrations of methylmercury in the water column. We must relate tissue concentrations to water column concentrations in order to use the criterion to establish discharge limits for point sources. Fish tissue criteria can be developed and potentially simplify compliance monitoring and site-specific adjustments, yet this does not eliminate the need to develop BAFs.

Using national BAFs is a scientifically valid approach to deriving national water quality criteria. EPA encourages States and authorized Tribes to develop BAFs based on field-measured data from local/regional fish, whenever possible, when developing their own water quality standards.

The 15 revised human health criteria do not incorporate BAFs, a component of the new methodology; rather, the revised criteria are based on previously-developed BCFs. Thus, we have not estimated intermediate fish tissue concentrations.

3. EPA Should Provide All Numeric Factors Used in the Derivation of the Proposed Criteria

Scientific view—One submitter stated that EPA should provide information and references for all components needed to calculate the proposed criteria, including K_{ow} values and food chain multipliers.

Response—EPA included all basic parameters necessary for deriving the criteria in the December 27, 2002,

Federal Register notice announcing the proposed revisions (67 FR 79091). These parameters include: BCFs, fish consumption rate, body weight, reference dose or cancer potency factor, and relative source contribution. You can find information relevant to the derivation of these basic parameters (*e.g.*, K_{ow} values used in the derivation of BCFs) in other data sources such as EPA's criteria documents.

The revised human health criteria EPA developed use the BCF values derived from the 1980 Ambient Water Quality Criteria National Guidelines (45 FR 79347). We did not use food chain multipliers in the 1980 Methodology and, therefore, did not use them in deriving the proposed criteria. Rather, the proposed criteria rely on previously-derived BCFs which may have been derived from lab or field studies. Even though these BCFs emphasize bioconcentration, in some instances they may reflect trophic level transfers but not through the use of food chain multipliers.

4. EPA Should Publish All Proposed Changes to the Human Health Water Quality Criteria in the **Federal Register**

Scientific view—One submitter stated that EPA should publish all proposed changes to the human health water quality criteria in the **Federal Register**. In this way, dischargers and other affected parties will be aware of upcoming changes that will affect permits and other activities.

Response—EPA described its process for publishing revised criteria in *National Recommended Water Quality Criteria—Correction* (64 FR 19781; or EPA 822–Z–99–001) and the **Federal Register** notice for the final methodology (65 FR 66444). EPA specifically stated that, when making minor revisions to existing criteria based on new information about individual components of the criteria, the Agency will publish the recalculated criteria directly as the Agency's national recommended water quality criteria. This is a reasonable and efficient way to more frequently publish revised section 304(a) criteria. Based on this approach, EPA partially revised 83 national recommended water quality criteria for the protection of human health. EPA published these updated national recommended water quality criteria in a compilation entitled *National Recommended Water Quality Criteria: 2002* (EPA–822–02–047).

EPA also revised 15 more national recommended water quality criteria for the protection of human health. Although the revision of these criteria represent a partial update of the section 304(a) criteria, EPA decided to solicit scientific views on the criteria because applying the new methodology resulted in significant changes (67 FR 79091; December 27, 2002).

5. The Criteria Compilation Should Clearly Articulate That the Recommended Criteria Are Available for States To Use, as Appropriate, in Adopting Their Water Quality Criteria

Scientific view—A submitter stated that the 2000 Human Health Methodology encourages States to use local fish consumption rates to establish site-specific criteria rather than default fish consumption rates. However, without site-specific fish consumption rates, States cannot develop the most accurate criteria. Therefore, the criteria compilation should clearly articulate that States are not required to adopt EPA's recommended criteria, but that EPA's recommended criteria are available, as appropriate, when adopting criteria.

Response—CWA section 304(a)(1) requires EPA to develop and publish criteria for water quality that accurately reflect the latest scientific knowledge. Under this authority, EPA publishes national criteria that are recommendations to States and authorized Tribes in adopting water quality standards. These criteria are based on national default parameters, such as fish ingestion rates. Nevertheless, as stated in the *National Recommended Water Quality Criteria:* 2002 (EPA–822–02–047) compilation, ''State and Tribal decision-makers have the discretion to adopt approaches on a case-by-case basis that differ from this guidance when appropriate.'' In addition, the 2002 compilation document explains that:

> ''States and authorized Tribes have four options when adopting water quality criteria for which EPA has published section 304(a) criteria. They can: (1) Establish numerical values based on recommended section 304(a) criteria; (2) adopt section 304(a) criteria modified to reflect site-specific conditions; (3) adopt criteria derived using other scientifically defensible methods; or (4) establish narrative criteria when numeric criteria cannot be determined (40 CFR 131.11).''

Thus, EPA clearly stated that States and authorized Tribes are not required to adopt EPA national recommended water quality criteria, and that States and authorized Tribes have the discretion to derive criteria based on site-specific considerations such as local fish consumption rates.

6. Vinyl Chloride

a. The proposed human health water quality criteria for vinyl chloride are too low.

Scientific view—A submitter indicated that improper methods, overly conservative assumptions, and data quality deficiencies result in the proposed human health water quality criteria for vinyl chloride being too low.

Response—In deriving the water quality criteria for vinyl chloride, EPA applied the 2000 Human Health Methodology. In developing this methodology, EPA solicited and incorporated input from many sources, including the EPA Science Advisory Board, several peer review workshops, and the public. EPA believes that the resulting methodology accurately reflects the latest scientific knowledge on the kind and extent of all identifiable effects on health and welfare that can be expected when pollutants are present in any body of water. Thus, the human health water quality criteria for vinyl chloride accurately reflect the relationship between vinyl chloride concentrations and human health effects.

The recommended water quality criteria for vinyl chloride are guidance for States and authorized Tribes to establish water quality standards. State and Tribal decision-makers have the discretion to adopt approaches on a case-by-case basis that differ from this guidance when appropriate.

b. EPA should use a central estimate as a point of departure in deriving vinyl chloride criteria.

Scientific view—Two submitters stated that the revised vinyl chloride human health water quality criteria for consumption of water and organism and consumption of organisms only are too low because EPA used overly conservative assumptions in their derivation. Risk-specific doses derived based on linear low-dose extrapolations using the lower 95 percent confidence limit on a dose associated with a 10 percent extra risk, or, LED_{10}, as the point of departure should not be used to derive criteria. Rather, risk-specific doses based on a central estimate, such as a dose associated with a 10 percent extra risk, or ED_{10}, should be used as a point of departure.

EPA's rationale for using the LED_{10} as the point of departure for model-based dose-response extrapolations in the 1996 proposed guidelines for carcinogen risk assessment is very weak. EPA did not hear the advice from peer review workshops on benchmark dose and the proposed cancer guidelines

recommending the use a of central estimate (ED_{10}) point of departure.

EPA's decision to use an LED_{10}, as opposed to an ED_{10}, in deriving revised human health criteria for vinyl chloride is inconsistent with EPA's Guidelines for Ensuring and Maximizing the Quality, Objectivity, Utility, and Integrity of Information Disseminated by the Environmental Protection Agency and the Information Quality Act (IQA). EPA's science policy decision to use the LED_{10}, instead of the ED_{10}, introduces significant uncertainty in the risk assessment that underlies the water quality criteria derivations, which is in violation of the IQA. The submitter requested that we correct this information.

Response—The 2000 Human Health Methodology includes toxicological and exposure assessment parameters derived from scientific analysis, science policy, and risk management decisions, including the 1986 cancer guidelines [see *Guidelines for Carcinogen Risk Assessment* (51 FR 33992)] and principles from the 1999 draft revised cancer guidelines [see *1999 Guidelines for Carcinogenic Risk Assessment—Review Draft* (NCEA–F–0644, July 1999)]. These principles arise from scientific discoveries about cancer made in the last 15 years and from EPA policy supporting full characterization of hazard and risk for both the general population and potentially sensitive groups like children.

In particular, EPA's 1999 draft revised cancer guidelines gave a rationale for selecting point of departures (PODs). For quantitative modeling of dose-response relationships in the observed range, the guidelines recommend calculating the lower 95 percent confidence limit on a dose associated with an estimated 10 percent increased tumor or relevant non-tumor response (LED_{10}). The estimate of the LED_{10} is used as the point of departure (POD) for low-dose extrapolation. This standard point of departure (LED_{10}) is adopted as a matter of science policy to remain as consistent and comparable across different studies. It is also a convenient comparison point for noncancer endpoints. The rationale for using the LED_{10} is that a 10 percent response is at or just below the limit of sensitivity for discerning a statistically significant tumor response in most long-term rodent studies and is also within the observed range for other toxicity studies. Using the lower limit takes experimental variability and sample size into account. Note that use of the lower 95 percent confidence limit on the ED_{10} implies that, given the experimental parameters (e.g., sample size, variation in response) of the study being used, there is a five percent chance or less that the ''true'' ED_{10} would be lower than the LED_{10}. For well-conducted studies with large numbers of animals, relatively close dose spacing, and little inherent variability in the animal responses, LED_{10} values will be close to the central estimate of the ED_{10} value. For studies that include smaller numbers of animals, wider dose spacing, and more variable responses in replicates at the same dose, the LED_{10} value will be further removed from the ED_{10} value. It is part of EPA's science policy to use the lower bound of a 95 percent confidence interval around a preferred value (e.g., central estimate of the ED_{10}) as a point of departure to ensure that the criterion will be adequately protective, that is, that the experimental uncertainty is small (a few percent or less). The EPA's IRIS cancer assessment of vinyl chloride uses the LED_{10} as the POD. EPA's *Guidelines for Ensuring and Maximizing the Quality, Objectivity, Utility, and Integrity of Information Disseminated by the Environmental Protection Agency* (EPA/260R–02–008, October 2002) indicated that EPA intends to specify the central estimate of human health risk when it is available. The ED_{10} (central estimate) for vinyl chloride is not presented in IRIS. More recent IRIS entries do include the central estimate, but this was not the policy at the time vinyl chloride was completed. The requirement for its inclusion was instituted in the 2003 Standard Operating Procedures for IRIS.

c. The vinyl chloride MCL is a more appropriate benchmark level.

Scientific view—A submitter indicated that the current maximum contaminant level (MCL) for vinyl chloride of two parts per billion (ppb) which was developed under the Safe Drinking Water Act (SDWA) is a more appropriate benchmark level.

Response—The human health water quality criteria developed under CWA section 304(a) are based solely on data and scientific judgments about the relationship between pollutant concentrations and environmental and human health effects. Unlike the MCLs, the criteria do not consider economic impacts or the technological feasibility of meeting the chemical concentrations in ambient water. Thus, MCLs are not considered counterparts to water quality criteria.

d. The vinyl chloride water quality criterion for consumption of organisms should only be based on incidental ingestion of non-potable, recreational waters.

Scientific view—A submitter stated that the revised vinyl chloride human health criteria for potable water was derived based on the assumption that people would drink two liters of surface water each day over a lifetime. Thus, surface water is effectively considered a public water supply. However, if the intended use of the water quality criteria is to set NPDES limits for potable waters not being used as public water supplies, then the water consumption assumption is overly conservative. Such waters serve only as recreational or occasional use water bodies, so that a value for incidental water ingestion would be more appropriate. For regulatory consistency, the water quality criteria for vinyl chloride for potable water supplies should be the same as the MCL.

Response—As required by CWA section 304(a), EPA develops water quality criteria that reflect the latest scientific knowledge on effects of pollutants on human health. States and authorized Tribes use the Agency's recommended section 304(a) water quality criteria to adopt enforceable water quality standards, including designating uses of a water body consistent with CWA section 101(a) (*e.g.*, public water supply, fishing, recreation). In developing the 2000 Human Health Methodology, we made assumptions about exposure to contamination from consuming surface waters of the U.S. Our assumptions ensure that, if criteria are met in a water body designated with the uses specified in section 101(a), people can safely consume water from that water body. In order to ensure this, it is necessary to assume that all of the consumed water is taken from water bodies at the criteria level (*i.e.*, contaminated to the maximum safe level).

The designated use inherent in the submitter's example is drinking water (potable water), even though the particular water body might not be used that way at the moment. Thus, the main issue in the view relates to the State's (or authorized Tribe's) assignment of designated use, not to numeric values for the national ambient water quality criteria for vinyl chloride.

Again, the human health water quality criteria developed under CWA section 304(a) are based solely on data and scientific judgments on the relationship between pollutant concentrations and environmental and human health effects. Unlike the MCLs, the criteria do not consider economic impacts or the technological feasibility of meeting the chemical concentrations in ambient water. MCLs are not counterparts to water quality criteria.

e. EPA's BCF for vinyl chloride is overstated and its water quality criterion

for consumption of organisms should only be based on incidental ingestion of non-potable, recreational waters.

Scientific view—One submitter stated that EPA derived its vinyl chloride human health criterion for consumption of organisms only using a bioconcentration factor (BCF) of 1.17. The submitter believes that this BCF is overstated because:

(1) This value is based on the assumption of equilibrium conditions between water and an organisms tissue, which is not the case because the compound is highly metabolized;

(2) the high volatility of vinyl chloride would contribute to its depuration during processing or cooking;

(3) the portions of the fish most likely to contain the compound, (*e.g.,* skin and fat) are not typically consumed by humans; and

(4) cooking would result in further off-gasing or destruction of the chemical.

Thus, we expect the potential for humans consuming aquatic organisms to be exposed to vinyl chloride to be negligible. Moreover, vinyl chloride does not biomagnify, and higher tropic level organisms consumed by humans would not contain elevated levels of vinyl chloride. EPA should derive its vinyl chloride criteria for consumption of organisms only based on exposure from incidental ingestion of non-potable recreational waters only.

Response—In updating its human health water quality criteria for vinyl chloride, EPA used the BCF derived from the 1980 Ambient Water Quality Criteria National Guidelines (45 FR 79347). The submitter is correct that, if a contaminant is readily metabolized in fish, the actual BCF might be less than estimated using the $KLED_{ow}$ method. EPA thanks the submitter for the information and will consider it when the Agency comprehensively updates the vinyl chloride criterion document to incorporate the BAF derivation procedures described in the 2000 Human Health Methodology.

C. Where Other Views Submitted?

We received a number of views on criteria that EPA was not revising, or the views expressed were not related to the science supporting the criteria derivations. EPA did not prepare responses addressing these views.

Dated: December 23, 2003.

Geoffrey H. Grubbs,

Director, Office of Science and Technology.

[FR Doc. 03–32211 Filed 12–30–03; 8:45 am]

BILLING CODE 6560–50–P

ENVIRONMENTAL PROTECTION AGENCY

[FRL–7604–7]

RIN 2040–ACXX

Preliminary Effluent Guidelines Program Plan for 2004/2005

AGENCY: Environmental Protection Agency (EPA).

ACTION: Notice of preliminary effluent guidelines plan; request for comments.

SUMMARY: Today's notice presents and invites comment on EPA's preliminary Effluent Guidelines Program Plan for 2004/2005. Under the Clean Water Act (CWA), EPA establishes technology-based national regulations, termed ''effluent guidelines,'' to reduce pollutant discharges from industrial facilities to waters of the United States. Section 304(m) of the Clean Water Act (CWA) requires EPA to publish an Effluent Guidelines Program Plan every two years. Today's notice has three purposes. First, it presents the results of EPA's annual review of the effluent guidelines that EPA has promulgated under CWA section 304(b). Second, it solicits public comment on the preliminary Effluent Guidelines Program Plan. Third, it describes and solicits comment on the analytical framework that EPA has employed to date in performing the annual review for 2003 and in developing today's preliminary Effluent Guidelines Program Plan. EPA had articulated an early form of this evolving analytical framework in the draft Strategy for National Clean Water Industrial Regulations, which EPA hopes to finalize concurrently with the Effluent Guidelines Program Plan in 2004.

DATES: EPA must receive comments on the preliminary Effluent Guidelines Program Plan for 2004/2005 by February 17, 2004. EPA will conduct a public meeting on Wednesday, January 28, 2004, from 9 a.m. to 12 p.m. Eastern Standard Time. For information on the location of the public meeting, see **ADDRESSES** section.

ADDRESSES: You can submit comments electronically, by mail, or through hand-delivery/courier. Please mail comments to the Water Docket, Environmental Protection Agency, Mail Code: 4101 T, 1200 Pennsylvania Avenue, NW., Washington, DC 20460 or submit them electronically to *http://www.epa.gov/edocket/*. For more information on submitting comments, see section I.C. EPA will hold an informational public meeting for interested stakeholders in the EPA East Building, Room 1153 (also known as the ''Great Room'' or the ''Map Room''), 1201 Constitution Avenue, NW., Washington, DC. For more information on the details and location of the public meeting, see section I.F.

FOR FURTHER INFORMATION CONTACT: Mr. Carey A. Johnston at (202) 566–1014 or *johnston.carey@epa.gov*, or Mr. Tom Wall at (202) 566–1060 or *wall.tom@epa.gov*.

SUPPLEMENTARY INFORMATION:

How Is This Document Organized?

The outline of the preliminary Effluent Guidelines Program Plan for 2004/2005 follows.

I. General Information
II. Legal Authority
III. What Are Effluent Guidelines?
IV. What Requirements Apply to This Effluent Guidelines Program Plan Effort?
V. What Is the Purpose of Today's **Federal Register** Notice?
VI. 2003 Annual Review of Effluent Guidelines That EPA Has Promulgated Under CWA Section 304(b)
VII. What Will Be the Focus of EPA's 2004 Annual Review?
VIII. Identification of and Schedule for Possible Categories for Potential New Effluent Guidelines
IX. Request for Comment and Information

I. General Information

A. Regulated Entities

Today's preliminary Effluent Guidelines Program Plan for 2004/2005 does not contain regulatory requirements, nor will the final plan do so. Rather, today's preliminary Effluent Guidelines Program Plan describes the current status of the effluent guidelines planning process, presents the results of the Agency's annual review of the effluent guidelines EPA has already promulgated for industrial categories, and identifies industrial categories that EPA expects to investigate further for the possible development or revision of effluent limitations guidelines.

B. How Can I Get Copies of This Document and Other Related Information?

1. Docket

EPA has established an official public docket for this action under Docket ID No. OW–2003–0074. The official public docket consists of the documents specifically referenced in this action, any public comments received, and other information related to this action. Although a part of the official docket, the public docket does not include information claimed as Confidential Business Information (CBI) or other information whose disclosure is restricted by statute. The official public docket is the collection of materials that

is available for public viewing at the Water Docket in the EPA Docket Center, (EPA/DC) EPA West, Room B102, 1301 Constitution Ave., NW., Washington, DC. The EPA Docket Center Public Reading Room is open from 8:30 a.m. to 4:30 p.m., Monday through Friday, excluding legal holidays. The telephone number for the Public Reading Room is (202) 566–1744, and the telephone number for the Water Docket is (202) 566–2426.

The following are the major documents supporting the preliminary Effluent Guidelines Program Plan:

- Factor 1 Analysis: Human Health and Environmental Impacts—Status of Screening Level Review Phase (DCN 00545, section 2.1).
- Factor 2 Analysis: Technology Advances and Process Changes—Status of Screening Level Review Phase (DCN 00546, section 2.2).
- Factor 4 Analysis: Implementation and Efficiency Considerations—Status of Screening Level Review Phase (DCN 00547, section 2.3).
- Description and Results of EPA Methodology to Synthesize Screening Level Results for the CWA 304(m) Effluent Guidelines Program Plan for 2004/2005 (DCN 00548, section 3.0).

2. Electronic Access

You may access this **Federal Register** document electronically through the EPA Internet under the ''Federal Register'' listings at *http://www.epa.gov/fedrgstr/*. An electronic version of the public docket is available through EPA's electronic public docket and comment system, EPA Dockets. You may use EPA Dockets at *http://www.epa.gov/edocket/* to submit or view public comments, access the index listing of the contents of the official public docket, and to access those documents in the public docket that are available electronically. Once in the system, select ''search,'' then key in the docket identification number for this action: OW–2003–0074.

Certain types of information will not be placed in the EPA Dockets. Information claimed as CBI and other information whose disclosure is restricted by statute, which is not included in the official public docket, will not be available for public viewing in EPA's electronic public docket. EPA's policy is that copyrighted material will not be placed in EPA's electronic public docket but will be available only in printed, paper form in the official public docket. To the extent feasible, publicly available docket materials will be made available in EPA's electronic public docket. When a document is selected from the index list in EPA Dockets, the system will identify whether the document is available for viewing in EPA's electronic public docket. Although not all docket materials may be available electronically, you may still access any of the publicly available docket materials through the docket facility identified in section I.B.1.

For public commenters, it is important to note that EPA's policy is that public comments, whether submitted electronically or in paper, will be made available for public viewing in EPA's electronic public docket as EPA receives them and without change, unless the comment contains copyrighted material, information claimed as CBI, or other information whose disclosure is restricted by statute. When EPA identifies a comment containing copyrighted material, EPA will provide a reference to that material in the version of the comment that is placed in EPA's electronic public docket. The entire printed comment, including the copyrighted material, will be available in the public docket.

Public comments submitted on computer disks that are mailed or delivered to the docket will be transferred to EPA's electronic public docket. Public comments that are mailed or delivered to the Docket will be scanned and placed in EPA's electronic public docket. Where practical, physical objects will be photographed, and the photograph will be placed in EPA's electronic public docket along with a brief description written by the docket staff.

C. How and to Whom Do I Submit Comments?

You may submit comments electronically, by mail, or through hand delivery/courier. We will not accept comments by facsimiles (faxes). To ensure proper receipt by EPA, identify the following docket identification number in the subject line on the first page of your comment: OW–2003–0074. Please ensure that your comments are submitted within the specified comment period. Comments received after the close of the comment period will be marked ''late.'' EPA is not required to consider these late comments. If you wish to submit information you claim as CBI or information that is otherwise protected by statute, please follow the instructions in section I.D. Do not use EPA Dockets or e-mail to submit information you claim as CBI or information protected by statute.

1. Electronically

If you submit an electronic comment as prescribed in this section, EPA recommends that you include your name, mailing address, and an e-mail address or other contact information in the body of your comment. Also include this contact information on the outside of any disk or CD ROM you submit, and in any cover letter accompanying the disk or CD ROM. This ensures that you can be identified as the submitter of the comment and allows EPA to contact you in case EPA cannot read your comment due to technical difficulties or needs further information on the substance of your comment. EPA's policy is that EPA will not edit your comment, and any identifying or contact information provided in the body of a comment will be included as part of the comment that is placed in the official public docket, and made available in EPA's electronic public docket. If EPA cannot read your comment due to technical difficulties and cannot contact you for clarification, EPA may not be able to consider your comment.

a. EPA Dockets

Your use of EPA's electronic public docket to submit comments to EPA electronically is EPA's preferred method for receiving comments. Go directly to EPA Dockets at *http://www.epa.gov/edocket*, and follow the online instructions for submitting comments. Once in the system, select ''search,'' and then key in Docket ID No. OW–2003–0074. The system is an ''anonymous access'' system, which means EPA will not know your identity, e-mail address, or other contact information unless you provide it in the body of your comment.

b. E-mail

Comments may be sent by electronic mail (e-mail) to *OW-Docket@epa.gov*, Attention Docket ID No. OW–2003–0074. In contrast to EPA's electronic public docket, EPA's e-mail system is not an ''anonymous access'' system. If you send an e-mail comment directly to the Docket without going through EPA's electronic public docket, EPA's e-mail system automatically captures your e-mail address. E-mail addresses that are automatically captured by EPA's e-mail system are included as part of the comment that is placed in the official public docket, and made available in EPA's electronic public docket.

c. Disk or CD ROM

You may submit comments on a disk or CD ROM that you mail to the mailing address identified in section I.C.2. These electronic submissions will be accepted as in WordPerfect or ASCII file format. Avoid the use of special characters and any form of encryption.

2. By Mail

Send the original and three copies of your comments and enclosures (including references) to: Water Docket, Environmental Protection Agency, Mail Code 4101T, 1200 Pennsylvania Avenue, NW., Washington, DC 20460, Attention Docket ID No. OW–2003–0074. Commenters who want EPA to acknowledge receipt of their comments should enclose a self-addressed, stamped envelope.

3. By Hand Delivery or Courier

Deliver your comments to: Environmental Protection Agency, EPA Docket Center, EPA West, Room B102, 1301 Constitution Avenue, NW., Washington, DC, Attention Docket ID No. OW–2003–0074. Such deliveries are only accepted during the Docket's normal hours of operation as identified in section I.B.1.

D. How Should I Submit CBI to the Agency?

Do not submit information that you consider to be CBI electronically to EPA Docket Center or through EPA's electronic public docket or by e-mail. Send or deliver information identified as CBI only to the following address: U.S. Environmental Protection Agency, 304(m) Effluent Guidelines Planning, 1201 Constitution Ave, NW., Room 6231G, EPA West Building, Washington, DC 20004. You may claim information that you submit to EPA as CBI by marking that information as CBI. If you submit CBI on disk or CD ROM, indicate on the outside of the disk or CD ROM that it contains information claimed as CBI and then identify electronically within the disk or CD ROM the specific information that is claimed as CBI. Information so marked will not be disclosed except in accordance with procedures set forth in 40 CFR part 2.

In addition to one complete version of the comment that includes any information claimed as CBI, a copy of the comment that does not contain the information claimed as CBI must be submitted for inclusion in the public docket and EPA's electronic public docket. If you use a disk or CD ROM, mark the outside of the disk or CD ROM clearly to indicate that it does not contain CBI. Information not marked as CBI will be included in the public docket and EPA's electronic public docket without prior notice. If you have any questions about CBI or the procedures for claiming CBI, please consult one of the persons identified in the **FOR FURTHER INFORMATION CONTACT** section.

E. What Should I Consider as I Prepare My Comments for EPA?

You may find the following suggestions helpful for preparing your comments:

- Explain your views as clearly as possible.
- Describe any assumptions that you used.
- Provide any technical information and/or data you used that support your views.
- Review section IX, ''Request for Comment and Information,'' for areas on which EPA specifically requests comments and information.
- If you estimate potential burden or costs, explain how you arrived at your estimate.
- Provide specific examples to illustrate your concerns.
- Offer alternatives.
- Make sure to submit your comments by the comment period deadline identified.
- To ensure proper receipt by EPA, identify the following docket identification number in the subject line on the first page of your response: OW–2003–0074. It would also be helpful if you provided the name, date, and **Federal Register** citation related to your comments.

F. What Are the Public Meeting Details for the Preliminary Plan?

A public meeting to review the preliminary Effluent Guidelines Program Plan for 2004/2005 will be held in Washington, DC (see **DATES** and **ADDRESSES** for the date and location of the public meeting). The meeting is open to the public, and limited seating for the public is available on a first-come, first-served basis. For security reasons, we request that you bring photo identification with you to the meeting. Also, it will expedite the process of signing in if you contact Ms. Patricia Harrigan at least three business days prior to the meeting with your name, phone number, and affiliation. Ms. Harrigan can be reached via e-mail at *harrigan.patricia@epa.gov*. Please use ''304(m) Public Meeting Attendee'' in the subject line. Ms. Harrigan can also be reached by telephone at (202) 566–1666.

EPA will not distribute meeting materials in advance of the public meeting; all materials will be distributed at the meeting. The purpose of the public meeting is to: (1) Review the preliminary Effluent Guidelines Program Plan for 2004/2005; (2) review the industry sectors identified for further investigation; and (3) identify information collection activities and analyses EPA anticipates completing for the final Plan. EPA will not record the meeting for the record supporting this action. Individuals wishing to comment on the preliminary Effluent Guidelines Program Plan for 2004/2005 would need to submit written comments as described in section I.C. in order for EPA to consider their comments in finalizing the plan.

If you need special accommodations at this meeting, including wheelchair access or special audio-visual support needs, you should contact Ms. Harrigan at least five business days prior to the meeting so that we can make appropriate arrangements. For those unable to attend the meeting, a copy of the presentation and meeting materials will be posted on the EPA Dockets Web site at: *http://www.epa.gov/edocket/* and EPA's Effluent Guidelines Planning Web site at: *http://www.epa.gov/guide/plan.html*.

Please note that parking is very limited in downtown Washington, and we recommend you use public transit. The EPA Headquarters complex is located near the Federal Triangle Metro station. Upon exiting the Metro station, walk east to 12th Street. On 12th Street, walk south to Constitution Avenue. At the corner, turn right onto Constitution Avenue and proceed to the EPA East Building entrance.

II. Legal Authority

Today's notice is published under the authority of section 304(m) of the CWA, 33 U.S.C. 1314(m).

III. What Are Effluent Guidelines?

The CWA directs EPA to promulgate effluent limitations guidelines and standards that, for most pollutants, reflect the level of pollutant control that is achievable by the best available technologies economically achievable for categories or subcategories of industrial point sources. See CWA sections 301(b)(2), 304(b), 306, 307(b), and 307(c). For point sources that introduce pollutants directly into the waters of the United States (direct dischargers), the limitations and standards promulgated by EPA are implemented through National Pollutant Discharge Elimination System (NPDES) permits. See CWA sections 301(a), 301(b), and 402. For sources that discharge to POTWs (indirect dischargers), EPA promulgates pretreatment standards that apply directly to those sources and are enforced by POTWs and State and Federal authorities. See CWA sections 307(b) and (c).

A. Best Practicable Control Technology Currently Available (BPT)—Section 304(b)(1) of the CWA

EPA defines Best Practicable Control Technology Currently Available (BPT) effluent limitations for conventional, toxic, and non-conventional pollutants. Section 304(a)(4) designates the following as conventional pollutants: biochemical oxygen demand (BOD5), total suspended solids, fecal coliform, pH, and any additional pollutants defined by the Administrator as conventional. The Administrator designated oil and grease as an additional conventional pollutant on July 30, 1979 (*see* 44 FR 44501). EPA has identified 65 pollutants and classes of pollutants as toxic pollutants, of which 126 specific substances have been designated priority toxic pollutants (*see* Appendix A to part 403, reprinted after 40 CFR 423.17). All other pollutants are considered to be non-conventional.

In specifying BPT, EPA looks at a number of factors. EPA first considers the total cost of applying the control technology in relation to the effluent reduction benefits. The Agency also considers the age of the equipment and facilities, the processes employed and any required process changes, engineering aspects of the control technologies, non-water quality environmental impacts (including energy requirements), and such other factors as the EPA Administrator deems appropriate. See CWA section 304(b)(1)(B). Traditionally, EPA establishes BPT effluent limitations based on the average of the best performances of facilities within the industry of various ages, sizes, processes or other common characteristics. Where existing performance is uniformly inadequate, BPT may reflect higher levels of control than currently in place in an industrial category if the Agency determines that the technology can be practically applied.

B. Best Conventional Pollutant Control Technology (BCT)—Section 304(b)(4) of the CWA

The 1977 amendments to the CWA required EPA to identify effluent reduction levels for conventional pollutants associated with Best Conventional Pollutant Control Technology (BCT) for discharges from existing industrial point sources. In addition to the other factors specified in section 304(b)(4)(B), the CWA requires that EPA establish BCT limitations after consideration of a two part ''cost-reasonableness'' test. EPA explained its methodology for the development of BCT limitations in July 9, 1986 (51 FR 24974).

C. Best Available Technology Economically Achievable (BAT)—Section 304(b)(2) of the CWA

In general, Best Available Technology Economically Achievable (BAT) effluent limitations guidelines represent the best available economically achievable performance of plants in the industrial subcategory or category. The factors considered in assessing BAT include the cost of achieving BAT effluent reductions, the age of equipment and facilities involved, the process employed, potential process changes, non-water quality environmental impacts, including energy requirements, and other such factors as the EPA Administrator deems appropriate. The Agency retains considerable discretion in assigning the weight EPA accords to these factors. BAT limitations may be based on effluent reductions attainable through changes in a facility's processes and operations. Where existing performance is uniformly inadequate, BAT may reflect a higher level of performance than is currently being achieved within a particular subcategory based on technology transferred from a different subcategory or category. BAT may be based upon process changes or internal controls, even when these technologies are not common industry practice.

D. New Source Performance Standards (NSPS)—Section 306 of the CWA

New Source Performance Standards (NSPS) reflect effluent reductions that are achievable based on the best available demonstrated control technology. New sources have the opportunity to install the best and most efficient production processes and wastewater treatment technologies. As a result, NSPS should represent the most stringent controls attainable through the application of the best available demonstrated control technology for all pollutants (*i.e.*, conventional, non-conventional, and priority pollutants). In establishing NSPS, EPA is directed to take into consideration the cost of achieving the effluent reduction and any non-water quality environmental impacts and energy requirements.

E. Pretreatment Standards for Existing Sources (PSES)—Section 307(b) of the CWA

Pretreatment Standards for Existing Sources (PSES) are designed to prevent the discharge of pollutants that pass through, interfere with, or are otherwise incompatible with the operation of publicly-owned treatment works (POTWs), including sludge disposal methods at POTWs. Pretreatment standards for existing sources are technology-based and are analogous to BAT effluent limitations guidelines.

The General Pretreatment Regulations, which set forth the framework for the implementation of national pretreatment standards, are found at 40 CFR part 403.

F. Pretreatment Standards for New Sources (PSNS)—Section 307(c) of the CWA

Like PSES, Pretreatment Standards for New Sources (PSNS) are designed to prevent the discharges of pollutants that pass through, interfere with, or are otherwise incompatible with the operation of POTWs. PSNS are to be issued at the same time as NSPS. New indirect dischargers have the opportunity to incorporate into their plants the best available demonstrated technologies. The Agency considers the same factors in promulgating PSNS as it considers in promulgating NSPS.

IV. What Requirements Apply to This Effluent Guidelines Program Plan Effort?

Section 304(m) requires EPA to publish a plan every two years containing three elements. First, EPA must establish a schedule for the annual review and revision of existing effluent guidelines in accordance with section 304(b). See CWA section 304(m)(1)(A). Section 304(b) specifies factors that EPA must consider when deciding whether to establish or revise effluent guidelines for existing direct dischargers and requires EPA to revise such regulations as appropriate. Second, EPA must identify categories of sources discharging toxic or non-conventional pollutants for which EPA has not published effluent limitations guidelines under section 304(b)(2) or NSPS under section 306. See CWA section 304(m)(1)(B). Finally, EPA must establish a schedule for promulgating effluent guidelines for industrial categories for which it has not already established such guidelines. The statute requires final action on such rulemaking not later than three years after the industrial category is identified in the Effluent Guidelines Program Plan. See CWA section 304(m)(1)(C). EPA is required to publish its Effluent Guidelines Program Plan for public comment prior to taking final action on the plan. See CWA section 304(m)(2).

The Effluent Guidelines Program Plan for 2004/2005 is intended to implement these statutory requirements. As part of the Effluent Guidelines Program Plan under CWA section 304(m), EPA

reviews existing limitations and standards for direct dischargers. In the course of this review EPA also reviews indirect dischargers in an industrial point source category when the industrial point source category is composed of both direct and indirect dischargers. For industrial point source categories that are entirely or almost entirely composed of indirect dischargers, EPA reviews, revises, and establishes pretreatment standards under a separate planning process, which is described in section 304(g) of the CWA.

Certain elements of EPA's current work on effluent guidelines continue to be governed by a Consent Decree. On October 30, 1989, the Natural Resources Defense Council, Inc., and Public Citizen, Inc., filed an action against EPA in which they alleged, among other things, that EPA had failed to comply with CWA section 304(m). Plaintiffs and EPA agreed to a settlement of that action in a Consent Decree entered on January 31, 1992. The Consent Decree, which has been modified several times, established a schedule for proposal and final action for eleven point source categories identified by name and for eight other point source categories identified only as new or revised rules. The Decree also established deadlines for EPA to complete studies of eight identified and three unidentified point source categories and required EPA to consider the results of those studies when identifying point source categories for possible new or revised effluent guidelines.

The last date for EPA action under the modified Decree is June 30, 2004. Table IV–1 identifies the new or revised effluent guidelines currently under development under the Decree and the schedules for final action.

TABLE IV–1.—EFFLUENT GUIDELINES GOVERNED BY CURRENT CONSENT DECREE

Category [1] (EPA web sites)	**Federal Register** proposal citation (date)	Final action date
Meat Products (*http://epa.gov/guide/mpp/*)	67 FR 8581 (Feb. 25, 2002)	02/26/04
Construction and Development (*http://epa.gov/guide/construction/*)	67 FR 42644 (June 24, 2002)	03/31/04
Aquatic Animal Production (*http://epa.gov/guide/aquaculture/*)	67 FR 57872 (Sept. 12, 2002)	06/30/04

[1] **Note:** EPA has proposed to add parts 450 and 451 to title 40 of the Code of Federal Regulations. EPA has proposed to change the title of 40 CFR 432 from ''Meat Products'' to ''Meat and Poultry Products.''

The preliminary Effluent Guidelines Program Plan for 2004/2005 (''304(m) Plan'' or ''Plan'') is a key step in developing the final plan. It represents a considerable effort by the Agency to implement a planning process that considers the hazards or risks to human health and the environment from industrial point source categories. It reflects a lengthy outreach effort to involve stakeholders in the planning process. It also reflects EPA's initial screening-level estimates of hazard or risk, which EPA examined for the purpose of identifying industrial point source categories. EPA will use these estimates to decide if new or revised guidelines are appropriate. In preparing this preliminary plan, EPA also considered the structure of specific industries and the availability of economically achievable technology that will reduce the identified hazard or risk. EPA will complete these analyses prior to publishing the final Effluent Guidelines Program Plan for 2004/2005.

V. What Is the Purpose of Today's Federal Register Notice?

Today's **Federal Register** notice has three purposes. First, it presents the results of EPA's annual review of the effluent guidelines that EPA has promulgated under CWA section 304(b). Second, it solicits public comment on the preliminary effluent guidelines plan as required by section 304(m)(2) of the CWA. Third, it describes and solicits comment on the analytical framework that EPA has employed to date in performing the annual review for 2003 and in developing today's preliminary Effluent Guidelines Program Plan. EPA articulated an early form of this evolving analytical framework in the draft Strategy for National Clean Water Industrial Regulations (''draft Strategy''), which EPA hopes to finalize concurrently with the Effluent Guidelines Program Plan in 2004.

VI. 2003 Annual Review of Effluent Guidelines That EPA Has Promulgated Under CWA Section 304(b)

As noted in section IV, the CWA requires EPA to publish a plan every two years that establishes a schedule for the annual review of the effluent guidelines that EPA has promulgated under CWA section 304(b). In today's **Federal Register** notice, EPA proposes a schedule whereby EPA would perform its annual review under CWA section 304(m)(1)(A) in concert with its efforts to identify industrial categories for new or revised effluent guidelines. In other words, in odd-numbered years, EPA would coordinate its annual review with the preliminary Effluent Guidelines Program Plan that EPA must publish for public review and comment under CWA section 304(m)(2). In even-numbered years, EPA would coordinate its annual review with its publication of the final plan.

EPA proposes this schedule for several reasons. First, the annual review is inextricably linked to the planning effort, because the results of each annual review inform the content of the proposed and final Effluent Guidelines Program Plans. Second, publishing the results of each annual review (including a description of the review process employed) at the same time EPA publishes proposed and final plans makes both processes more transparent. Third, by requiring EPA to review all existing effluent guidelines each year, we assume that Congress intended that each successive review would build upon the results of earlier reviews. Therefore, by publishing the results of the 2003 annual review here, EPA hopes to receive data and information that will inform its review for 2004 and the future. In addition, EPA hopes that publishing the 2003 annual review will prompt comments not only on the content of that review but also on the processes and factors we used in performing it. EPA may decide to change that process as a result of comments on today's notice.

As part of its 2003 annual review, EPA also reviewed the NSPS promulgated by EPA under CWA section 306 and pretreatment standards promulgated under CWA sections 307(b) and 307(c), although it was not required under CWA section 304(m)(1)(A) to do so.

A. What Process and Rationale Did EPA Use To Review Effluent Guidelines That EPA Has Promulgated Under CWA Section 304(b)?

1. What Is an Existing Set of Effluent Guidelines for Purposes of EPA's Annual Review Under Section 304(m)(1)(A)?

EPA's annual review obligation under section 304(m)(1)(A) applies to ''promulgated effluent guidelines.'' Because this subparagraph refers specifically to section 304(b), EPA interprets this to refer to Best Available Technology (BAT), Best Practicable Technology (BPT) and Best Conventional Pollutant Control Technology (BCT) effluent limitations guidelines codified at 40 CFR parts 405–471 (representing a total of 55 categories and over 450 subcategories). As discussed in more detail in section VI.A.2, EPA used pollutant loading, technological, economic, and other factors required by the CWA to consider whether it is appropriate to revise the specific limitations codified in each set of effluent guidelines.

EPA also examined the processes and operations forming the basis of each subcategory for which EPA had already promulgated effluent guidelines in order to decide whether it might be appropriate to address (through new subcategories) other industrial activities that are similar in terms of type of operations performed, wastewaters generated, and available pollution prevention and treatment options. Issues associated with new subcategories very often are interwoven with the structure and requirements of the existing regulation. A previous example where EPA addressed industrial operations not currently regulated by existing effluent guidelines by establishing new subcategories under an existing category is the agricultural refilling establishments subcategory (subpart E) that EPA added to the Pesticide Chemicals point source category (40 CFR part 455) (November 6, 1996; 61 FR 57518).

EPA's annual review of existing effluent guidelines also focused on identifying pollutants that are not regulated by existing effluent guidelines but that comprise a significant portion of the hazard or risk estimate for the industrial point source categories. EPA believes that it is reasonable to consider new pollutants for regulation in the course of reviewing existing effluent guidelines under CWA section 304(m)(1)(A). EPA has several reasons for this. First, a newly identified pollutant might be adequately addressed through the additional control of regulated pollutants in an existing set of effluent guidelines. In some cases, revising existing limitations for one set of pollutants will address hazards or risks associated with a newly identified pollutant. Second, EPA believes it is necessary to understand the effectiveness (or ineffectiveness) of existing effluent guidelines in controlling newly identified pollutants before EPA can identify potential technology-based control options for these pollutants. For example, EPA revised existing effluent guidelines for the Oil and Gas Extraction point source category (40 CFR part 435) to address new pollutants that resulted from a new pollution prevention technology (synthetic-based drilling fluids). See 66 FR 6850 (January 22, 2001). Similarly, EPA revised BAT limitations for the bleached papergrade kraft and soda and papergrade sulfite subcategories within the Pulp and Paper industrial point source category in 1998 to include for the first time effluent guidelines for dioxin. Third, the regulatory organization of subcategories in an existing guidelines also has a bearing on the identification of pollutants for regulation.

In short, EPA believes that the appropriateness of creating a new subcategory or addressing a newly identified pollutant is best considered in the context of revising an existing set of effluent guidelines as a whole. Accordingly, EPA is performing these analyses as part of the Agency's responsibilities under CWA section 304(m)(1)(A).

2. What Factors Did EPA Consider When Performing its 2003 Annual Review of Existing Guidelines?

The starting point of EPA's analysis is CWA section 301(b)(2)(A), which requires dischargers to achieve effluent limitations that reflect the ''best available technology economically achievable,'' as identified by the Administrator under the authority of CWA section 304(b)(2). Section 304(b), in turn, requires EPA to consider many factors in identifying BAT. These are discussed in section III.C. Because CWA section 304(m)(1)(A) requires EPA to review promulgated guidelines in accordance with CWA section 304(b), EPA interprets the statute to authorize EPA to employ the same factors for its annual review that it would consider in selecting BAT in a rulemaking context. EPA believes that this is a reasonable approach because the outcome of EPA's annual review is a decision—expressed in the final Effluent Guidelines Program Plan—identifying those effluent guidelines for possible revision.

By using the statutory factors in section 304(b) and section 301(b)(2)(A) as the framework for its annual review of existing guidelines, EPA can begin its investigation with a variety of technological, economic, and environmental issues associated with industrial categories that ultimately will help determine the need for, or scope of, a revised effluent guideline. In the draft Strategy for National Clean Water Industrial Regulations, EPA identified four major factors—based on section 304(b)—that the Agency would examine, in the course of its annual review, to determine whether it would be necessary and appropriate to revise an existing set of effluent guidelines, or whether to develop a new set of effluent guidelines for a newly identified industrial category.

The first factor (referred to in this notice as ''Factor 1'') is consideration of the extent to which the pollutants remaining in an industrial category's discharge pose a hazard or risk to human health or the environment. The second factor (referred to in this notice as ''Factor 2'') is identification of an applicable and demonstrated technology, process change, or pollution prevention alternative that can effectively reduce the pollutants remaining in the industrial category's wastewaters and thereby substantially reduce the hazard or risk to human health or the environment associated with these pollutant discharges.

The third factor (referred to in this notice as ''Factor 3'') encompasses the cost, performance, and affordability of the technology, process change, or pollution prevention measures identified using the second factor. If the financial condition of the industry indicates significant difficulties in achieving the reductions, EPA would be reluctant to select the effluent guidelines for revision because there is a significant probability that EPA might ultimately determine that standards based on the new technology, process change, or pollution prevention measures were not ''economically achievable,'' as required by the CWA. Agency resources would be more effectively spent developing more efficient, less costly approaches to reducing pollutant loadings that would better satisfy applicable statutory requirements.

The fourth factor (referred to in this notice as ''Factor 4'') incorporates implementation and efficiency considerations and recommendations from stakeholders. Here, EPA considers opportunities to eliminate inefficiencies or impediments to pollution prevention or technological innovation, or

opportunities to promote innovative approaches such as water quality trading, including within-plant trading. For example, industry requested in comments on the Offshore and Coastal effluent guidelines rulemakings that EPA specifically set standards for a new pollution prevention technology (synthetic-based drilling fluids). EPA promulgated these revision on January 22, 2001 (66 FR 6850). This factor might also prompt EPA to decide in a particular Plan against scheduling an existing effluent guideline for revision where the pollutant source is already efficiently addressed by another regulatory program or by non-regulatory programs.

EPA also considered stakeholder recommendations for guideline development or revision even when they did not raise issues associated with implementation or efficiency considerations. In evaluating those recommendations, EPA considered the extent to which the pollutants in an industrial category's discharge pose a hazard or risk to human health or the environment (see Factor 1). EPA also considered whether the industrial sectors recommended by stakeholders are potentially subject to the Effluent Guidelines Program.

In the course of performing its annual review for 2003, EPA evaluated where possible publicly available Agency databases and reports that contain nationwide information on an industry basis, but became aware of data quality and limitations in evaluating this information. EPA learned that it lacked sufficient data and information to consider the four factors for the industrial categories for which EPA has promulgated effluent guidelines under CWA section 304(b) in the exact manner and sequence described in the draft Strategy. For example, EPA found that it was much more difficult than anticipated to gather the data needed to perform a meaningful screening-level analysis of the availability of treatment or process technologies that might reduce hazard or risk beyond the performance of technologies in place at facilities in 55 industrial categories. Similarly, EPA could not identify a suitable screening-level tool for evaluating the economic affordability of treatment or process technologies because the universe of facilities is too broad and complex. Furthermore, EPA could not find a reasonable way to prioritize industries for the Effluent Guidelines Program Plan based on a broad economic profile. Consequently, for its 2003 review, EPA focused its efforts on collecting and analyzing screening-level data to identify industrial categories whose pollutant discharges potentially pose the greatest hazards or risks to human health and the environment because of their toxicity. EPA also considered efficiency and implementation issues. As described in section VII, EPA will conduct detailed studies, as part of its 2004 annual review, to evaluate economic and technology issues for industrial categories with discharges that EPA believes offer the most significant opportunities for reducing risks or hazards. EPA will also continue to collect and analyze data on other industries whose discharges potentially pose high risks or hazards. See sections VII.B and C.

In order to focus its inquiry during the 2003 annual review, EPA excluded categories for which EPA had promulgated effluent guidelines within the past seven years. EPA chose seven years because of the time it takes for effluent guidelines to be incorporated as enforceable effluent limitations into NPDES permits when they are renewed, which could be up to five years after the effluent guidelines are promulgated. This time period also allows for the pollutant reductions associated with recently-promulgated guidelines to be reflected in discharge monitoring data and Toxics Release Inventory (TRI) reports, so that the Agency can assess the potential for remaining risks or hazards. (In cases where EPA is aware of the growth of a new segment within a category for which EPA had recently revised effluent guidelines, or where new concerns are identified for pollutants discharged by facilities within the industrial category, EPA may decide not to exclude the category from review, but EPA identified no such instance during the 2003 review.) EPA also excluded categories with guideline revisions currently underway.

EPA also excluded industry categories addressed by other Clean Water Act provisions. For example, some stakeholders urged EPA to identify municipal storm water discharges for effluent limitation guidelines; however, these discharges are addressed under CWA section 402(p). Similarly, technology-based standards for publicly-owned treatment works (POTWs) are addressed under sections 301(b)(1)(B) and 304(d).

Commenters also identified discharges from ocean going vessels (cruise ships, ballast and bilge water) as a possible candidate for an effluent guidelines rulemaking. However, discharges of ballast water from vessels are not subject to CWA permitting requirements. *See* 68 FR 53165 (September 9, 2003). Under EPA's regulations at 40 CFR 122.3(a), discharges from properly functioning marine engines (*i.e.*, bilge water), laundry, shower, and galley sink wastes, and other discharges incidental to the normal operation of a vessel do not require NPDES permit authorization unless the vessel is operating in a capacity other than as a means of transportation. Finally, discharges of sewage from vessels, are regulated under CWA section 312. None of these discharges requires NPDES permits under section 402 and, therefore, none are subject to BAT limitations or NSPS. Although EPA is currently considering a citizen petition seeking detailed consideration of cruise ship discharges and, if necessary, rulemaking to regulate such discharges, EPA has not yet decided whether (and if so, which) cruise ship discharges should be regulated under NPDES permits. In addition, recently-enacted, free standing legislation—not the CWA—imposes discharges limitations on black water (*i.e.*, sewage) and gray water (*i.e.*, laundry, shower, and galley sink wastes) for cruise ships operating in certain Alaskan waters.

EPA also excluded from consideration in its 2003 review: (1) Industries composed entirely or almost exclusively of indirect dischargers (*e.g.*, dental facilities), because the facilities are not subject to effluent guidelines under CWA section 304(b)(2); and (2) industries where the estimated hazard or risk was unclear and more data were needed to determine its magnitude. For the latter group, EPA intends to collect additional information for the next biennial Plan. EPA also did not identify industries where the vast majority of the estimated hazard or risk was limited to only one or a few facilities, because EPA believes that in such cases permit writing support to the States might better address the environmental problem. In judging whether support to permit writers would more effectively address a hazard or risk than national rulemaking, EPA will consider the number of facilities, their geographic location and other relevant factors.) EPA would assist in identifying control technologies and the effluent limitations based on best professional judgment (BPJ) on a facility-specific basis. EPA will evaluate this decision criterion based on the information available at the time of each annual review. By using this multi-layered screening approach, the Agency concentrated its resources on those categories that posed the greatest hazard or risk (based on best available data), while deferring consideration of industrial point source

categories that the Agency believes are not good candidates for effluent guidelines establishment or revision during this planning cycle.

As part of this year's review, EPA considered excluding from additional review industrial categories that have demonstrated that they are making significant progress through voluntary efforts to reduce hazard or risk to human health and the environment associated with their discharges. EPA agrees with stakeholders who have stated that voluntary efforts should be encouraged and rewarded, especially where voluntary reductions have been widely adopted within an industry and have led to significant reductions in pollutant discharges. EPA could not complete a systematic review of voluntary pollutant loading reductions during this annual review. However, a successful voluntary program would produce significant reductions in pollutant discharges, which in turn would be reflected in discharge monitoring and TRI data that EPA used to assess the potential hazard or risk associated with pollutant discharges.

For a number of the industries that appeared to offer the greatest potential for reducing hazard or risk to human health or the environment, EPA attempted to gather and analyze additional data prior to commencing detailed and costly economic and technology studies. EPA examined: (1) The pollutants driving the hazard or risk estimates; (2) the geographic distribution of facilities in the industry; (3) any discharge trends within the industry; and (4) possible links between industrial point source discharges and impaired waterbodies identified by EPA, States, and Tribal governments under CWA section 303(d). EPA also performed limited quality assurance checks on the data used to develop hazard or risk estimates (*e.g.*, verifying data reported to TRI and the Permit Compliance System) to determine if any of the hazard or risk estimates relied on incorrect or suspect data. To the extent possible, EPA also considered the efficiency of existing treatment and any applicable and demonstrated technology, process change, or pollution prevention alternatives that could effectively reduce the pollutants remaining in the industry category's wastewaters.

Performance of this screening level analysis constitutes EPA's annual review for 2003.

3. What Was the Outcome of the Annual Review for 2003?

As a result of its 2003 annual review, EPA identified two industrial categories for detailed investigation in its 2004 annual review: Organic Chemicals, Plastics, and Synthetic Fibers (part 414); and Petroleum Refining (part 419). During detailed investigation of these categories, EPA hopes to perform a more in-depth analysis of technology innovation and process changes in these industrial categories, as well as an analysis of technology cost and affordability. EPA will also consider whether new subcategories are needed for either of these categories. The purpose of the detailed investigation is to determine whether, in the final Effluent Guidelines Program Plan for 2004/2005, EPA should identify one or both of these industrial categories for possible revision of their existing effluent guidelines. Based on the information available to EPA at this time, EPA is not proposing to make such an identification. However, EPA will examine the results of its 2004 annual review, which it intends to conclude prior to publishing the final Effluent Guidelines Program Plan for 2004/2005, and will make a final decision on this matter as part of its final Plan. EPA requests comment and supporting data on whether it should identify either or both of these industrial categories for possible effluent guidelines rulemakings in the final Effluent Guidelines Program Plan for 2004/2005.

At that time or shortly thereafter, EPA would make available for public comment the data and information underlying any decision to identify for possible revision the guidelines for one or both of these industrial categories. EPA would then consider the public comments as part of its 2005 annual review. EPA emphasizes that a decision in the Effluent Guidelines Program Plan for 2004/2005 to identify one or both guidelines for possible revision does not in any way constitute a final decision to revise the guideline or guidelines. EPA would make any such effluent guidelines revisions—supported by an administrative record following an opportunity for public comment—only in connection with a formal rulemaking process pursuant to a schedule announced in that or a future Effluent Guidelines Program Plan.

If EPA decides to identify one or both of the guidelines for these industrial categories for possible revision in its final Effluent Guidelines Program Plan for 2004/2005, EPA would expect to announce in that plan that EPA would start the rulemaking process in the Summer of 2004. The rulemaking schedule itself would depend on a number of factors including the complexity of the industry and the availability of the data needed to support the development of a proposal. In addition, if EPA were to select both of these industrial categories for effluent guidelines rulemakings, EPA would likely stagger the start dates of the rulemakings in order to ensure that Agency resources are used most effectively. In proposing the next Effluent Guidelines Program Plan, EPA would review these schedules and its progress to date. At that time, EPA could also determine, based on more in-depth data gathering and analyses, particularly with respect to Factors 2 and 3, that revisions to the effluent guidelines for one or both industrial categories were not warranted (*i.e.*, that the existing guidelines remain appropriate in light of applicable statutory factors). See section VII.A for additional information on the status of EPA's investigation of these industries.

EPA also identified potentially high risks or hazards associated with discharges from two other industrial categories: Inorganic Chemicals (part 415) and Nonferrous Metals Manufacturing (part 421). However, the Agency identified data gaps or issues that made these industries a lower priority than organic chemicals and petroleum refining. EPA does not have enough information at this time to determine whether there is a hazard or risk warranting a detailed review of these industries for potential guideline revision and does not anticipate identifying these effluent guidelines for revision in the final 2004/2005 Effluent Guidelines Program Plan. See section VII.B for additional information on the status of EPA's investigation of these industrial point source categories.

EPA identified seven other industrial point source categories with relatively high estimates of potential hazard or risk, but also identified significant data gaps or issues affecting the Agency's estimates of these hazards or risks. EPA will continue to collect and analyze information on these seven industrial categories but will assign a higher priority to investigating the organic chemicals, petroleum refining, inorganic chemicals and nonferrous metals manufacturing industrial categories. EPA does not anticipate identifying any of these seven industries for revision of an effluent guideline in the final Effluent Guidelines Program Plan for 2004/2005. See section VII.C.

EPA's Regional Offices and stakeholders identified nine other industrial point source categories as potential candidates for effluent guideline revision based on potential opportunities to improve efficient implementation of the national water quality program or because their

discharges may contribute to water quality problems. EPA evaluated these industrial point source categories and, based on available data, did not identify hazard or risks that appear to warrant effluent guideline revision. EPA does not anticipate identifying any of these nine industries for revision of an effluent guideline in the final Effluent Guidelines Program Plan for 2004/2005. See section VII.C.

The outcome of the 2003 annual review is presented in Table VI–1. The table identifies some of the information considered by EPA during this annual review, including whether the industry was mentioned at least once during stakeholder and EPA Regional outreach efforts, and where the industry ranks in terms of hazard in units of toxic-weighted pounds equivalent (TWPE) using TRI and PCS data. It also indicates whether EPA is identifying the particular industrial category for further investigation during the 2004 annual review (leading to a possible decision in the final Effluent Guidelines Program Plan for 2004/2005 to identify that category for rulemaking). A ''No'' in this column means that EPA does not plan to conduct a detailed study for this industry prior to publication of the final Effluent Guidelines Program Plan for 2004/2005. It also means that EPA does not plan to select this industry for effluent guidelines revisions for the final Effluent Guidelines Program Plan for 2004/2005. Finally, EPA used a set of rationales for making industry specific decisions for the preliminary Effluent Guidelines Program Plan for 2004/2005. Table VI–1 uses the following codes to describe the rationales for the Agency's industry specific decisions:

(1) Effluent guidelines for this industry were recently revised or rulemaking is underway.

(2) EPA will consider whether to provide region-, State-, or facility-specific permit support for this industry.

(3) Not identified as a hazard or risk priority.

(4) Incomplete data available for analysis: Need to collect more information for the next biennial plan.

(5) EPA will consider whether to develop guidance in order to clarify existing permitting requirements.

(6) All or nearly all sources engaged in this industrial activity are indirect dischargers.

TABLE VI–1.—INDUSTRIES COVERED BY EXISTING EFFLUENT GUIDELINES (PROMULGATED UNDER SECTION 304(B))

No.	Industry category (listed alphabetically)	40 CFR part [1]	Suggested in stakeholder outreach? (Yes/No)	TRI rank [2]	PCS rank [2]	Conduct detailed investigation of industry for 2004/2005 plan? (Yes/No)	Rationale
1	Aluminum Forming	467	No	25	18	No	(3)
2	Aquatic Animal Production Industry.	451	Yes	N/A	45	No	(1)
3	Asbestos Manufacturing	427	No	51	N/A	No	(3)
4	Battery Manufacturing	461	Yes	36	48	No	(3)
5	Canned and Preserved Fruits and Vegetable Processing.	407	Yes	29	38	No	(4)
6	Canned and Preserved Seafood Processing.	408	Yes	49	26	No	(4)
7	Carbon Black Manufacturing.	458	No	N/A	N/A	No	(3)
8	Cement Manufacturing	411	No	33	29	No	(3)
9	Centralized Waste Treatment.	437	No	N/A	N/A	No	(1)
10	Coal Mining	434	Yes	26	39	No	(1) and (4).
11	Coil Coating	465	Yes	32	N/A	No	(4)
12	Concentrated Animal Feeding Operations (CAFO).	412	No	N/A	N/A	No	(1)
13	Construction and Development.	450	Yes	N/A	N/A	No	(1)
14	Copper Forming	468	No	28	34	No	(3)
15	Dairy Products Processing.	405	Yes	37	47	No	(4)
16	Electrical and Electronic Components.	469	Yes	34	23	No	(4)
17	Electroplating	413	Yes	23	27	No	(1)
18	Explosives Manufacturing.	457	No	41	35	No	(3)
19	Ferroalloy Manufacturing.	424	No	27	31	No	(3)
20	Fertilizer Manufacturing	418	Yes	20	17	No	(4)
21	Glass Manufacturing	426	No	38	48	No	(3)
22	Grain Mills	406	No	35	42	No	(3)
23	Gum and Wood Chemicals.	454	No	46	21	No	(3)
24	Hospitals	460	Yes	40	46	No	(6)
25	Ink Formulating	447	No	45	N/A	No	(3)
26	Inorganic Chemicals Manufacturing.	415	Yes	12	7	No	See section VII.B.1.

TABLE VI–1.—INDUSTRIES COVERED BY EXISTING EFFLUENT GUIDELINES (PROMULGATED UNDER SECTION 304(B))—Continued

No.	Industry category (listed alphabetically)	40 CFR part [1]	Suggested in stakeholder outreach? (Yes/No)	TRI rank [2]	PCS rank [2]	Conduct detailed investigation of industry for 2004/2005 plan? (Yes/No)	Rationale
27	Iron and Steel Manufacturing.	420	No	6	5	No	(1)
28	Landfills	445	No	9	12	No	(1)
29	Leather Tanning and Finishing.	425	No	24	36	No	(3)
30	Meat Products	432	Yes	30	25	No	(1)
31	Metal Finishing	433	Yes	11	8	No	(1)
32	Metal Molding and Casting.	464	Yes	22	33	No	(4) and (5).
33	Metal Products and Machinery.	438	Yes	47	15	No	(1)
34	Mineral Mining and Processing.	436	Yes	52	22	No	(4)
35	Nonferrous Metals Forming and Metal Powders.	471	No	16	30	No	(3)
36	Nonferrous Metals Manufacturing.	421	No	8	9	No	See section VII.B.2.
37	Oil and Gas Extraction	435	No	50	43	No	(1) and (4).
38	Ore Mining and Dressing.	440	Yes	21	10	No	(4)
39	Organic Chemicals, Plastics and Synthetic Fibers.	414	Yes	1	4	Yes	See section VII.A.1.
40	Paint Formulating	446	No	N/A	N/A	No	(3)
41	Paving and Roofing Materials (Tars and Asphalt).	443	No	48	41	No	(3)
42	Pesticide Chemicals	455	No	31	16	No	(3)
43	Petroleum Refining	419	Yes	4	14	Yes	See section VII.A.2.
44	Pharmaceutical Manufacturing.	439	No	17	24	No	(1)
45	Phosphate Manufacturing.	422	No	44	6	No	(4)
46	Photographic	459	No	N/A	48	No	(3)
47	Plastic Molding and Forming.	463	No	15	37	No	(3)
48	Porcelain Enameling	466	No	18	20	No	(3)
49	Pulp and Paper Subparts B & E (Phase I).	430	Yes	3	3	No	(1)
50	Pulp and Paper Subparts C and F through L (Phase II).	430	Yes	7	19	No	(4)
51	Pulp and Paper Subparts A & D (Phase III).	430	Yes	30	25	No	(2)
52	Rubber Manufacturing	428	No	14	32	No	(3)
53	Soaps and Detergents Manufacturing.	417	No	42	44	No	(3)
54	Steam Electric Power Generation.	423	Yes	5	1	No	(4)
55	Sugar Processing	409	No	43	28	No	(3)
56	Textile Mills	410	Yes	19	11	No	(4)
57	Timber Products Processing.	429	Yes	2	40	No	(4)
58	Transportation Equipment Cleaning.	442	Yes	N/A	N/A	No	(1) and (6).
59	Waste Combustors	444	No	9	12	No	(1)

[1] **Note:** EPA has proposed to add parts 450 and 451 to title 40 of the Code of Federal Regulations. EPA has proposed to change the title of 40 CFR 432 from ''Meat Products'' to ''Meat and Poultry Products.''

[2] **Note:** These rankings are based on the toxic-weighted pounds equivalent (TWPE) associated with their toxic or non-conventional pollutant discharges reported to TRI or PCS. An NA in this column means that data and information were not available for this category.

B. How Did EPA Estimate Potential Hazards or Risks to Human Health or the Environment As Part of Its 2003 Annual Review?

The screening-level review of potential hazards or risks to human health or the environment (EPA's ''Factor 1'' review) focused on using readily available information to assess the potential hazard or risk associated with pollutants discharged from industrial point sources. EPA reviewed such data sources as Agency databases, models, existing scientific literature, the Gulf Hypoxia Action Plan, and analyses currently underway on chemical contaminants in the environment. This included data on pollutant point source discharges, water quality, environmental impacts (*e.g.*, sediment and fish contamination), and pathogen impacts. The two major data sources/analyses that formed the basis of ranking industries for the current Factor 1 analysis are the Toxics Release Inventory (TRI) and Permit Compliance System (PCS). The Factor 1 analysis also describes the available data linking water quality impairments with point sources discharges. EPA focused this impaired waters analysis on those point source dischargers discharging the most pounds of toxic and non-conventional pollutants (as estimated by the initial screening TRI and PCS analyses). Section 2.1 of the docket contains the complete analysis including descriptions of additional data sources that may be useful in future planning cycles.

EPA primarily relied on PCS and TRI for estimating pollutant discharges. EPA believes that the TRI database is a reasonable starting point for identifying possible hazard or risk concerns as it is a national database on reported toxic discharges. EPA's Permit Compliance System (PCS) contains information required by the NPDES Permit Program for major dischargers across the country.[1] EPA does not require States to include data for other dischargers (*e.g.*, minor and indirect dischargers) in PCS, so little information is available about industries dominated by minor and indirect dischargers. However, EPA is primarily concerned with facilities that may discharge high volumes of polluted wastewaters because these are more likely to pose the greatest hazard or risk to human health or the environment. PCS is the primary repository of data used to determine reductions in pollutant loads to the waters of the United States. Because of its national scope, PCS is also a reasonable starting point for identifying hazard or risk concerns, especially when combined with other sources of information. Finally, the Agency also analyzed the spatial correlation between the discharge outfalls of regulated facilities that report to PCS and impaired water bodies listed under section 303(d) of the Clean Water Act.

We used the TRI and PCS databases as the focus in this round of analysis because of their nationwide coverage, relative accessability, ability to link the source with the pollutant discharge, and the important types of toxic releases that they cover. However, as detailed in the complete Factor 1 report, the Agency is exploring other avenues of information that may be added in future planning cycles. These include, for example, regional resources such as the Gulf Hypoxia Action Plan (nutrients), various sources related to pathogens, information that becomes available as the Agency implements its Endocrine Disruptor Screening Program, and information being developed in the U.S. Geological Survey's National Water-Quality Assessment Program.

C. How Did EPA Evaluate Stakeholder Input As Part of Its 2003 Annual Review?

EPA's planning process for the Effluent Guidelines Program has historically considered information provided by stakeholders regarding the need for new or revised effluent guidelines or regarding issues associated with effluent guidelines implementation and efficiency. For the 2003 annual review, EPA obtained information from informal discussions with stakeholder groups with an interest in the Effluent Guidelines Program and with EPA and state staff charged with implementing effluent guidelines in NPDES permits, as well as from public comments submitted to EPA on the draft strategy.

Stakeholders' suggestions played a prominent role in the screening analyses conducted for the preliminary Effluent Guidelines Program Plan for 2004/2005. Examples of such sectors include food processing/preparation industries (nutrients and/or oil and grease); and drinking water supply and treatment (total suspended solids); and coalbed methane (total dissolved solids, sodium adsorption ratio).

Results of the formal comment process are presented in this notice and in the following document: Factor 4 Analysis: Implementation and Efficiency Considerations—Status of Screening Level Review Phase (DCN 00547, section 2.3). Results of the informal process are described in today's notice and in the public record, section 2.3. EPA will follow up with stakeholders, as necessary, for more information on their recommendations as the planning process continues. EPA hopes that public review of this and future proposed and final Effluent Guidelines Program Plans will elicit additional information and suggestions. Tables VI–2 and VI–3 describe which industry sectors were identified during the Agency's outreach activities. Table VI–2 uses the same codes as Table VI–1 to describe the rationales for the Agency's industry specific decisions. Table VI–3 uses the same codes as Table VIII–1 to describe the rationales for the Agency's industry specific decisions.

TABLE VI–2.—INDUSTRIAL POINT SOURCE CATEGORIES CURRENTLY REGULATED BY EFFLUENT GUIDELINES IDENTIFIED DURING OUTREACH

Industry	Formal comment process		Previous outreach	Draft stratey outreach		Rationale
	Comments on draft strategy	Comments on 2002/2003 plan		Permitting authorities	AMSA and/or ASWIPCA [1]	
Canned and Preserved Fruits and Vegetable Processing.	.....	.....	✔	.....	.....	(3)
Canned and Preserved Seafood Processing.	.....	.....	✔	✔	✔	(4)
Coal Mining	.....	✔	✔	.....	✔	(1) and (4).

[1] A major discharger is any NPDES facility or activity classified as such by the Regional Administrator, or, in the case of approved State Programs, the Regional Administrator in conjunction with the State Director. Major industrial facilities are determined based on specific ratings criteria developed by EPA and approved State Programs.

TABLE VI–2.—INDUSTRIAL POINT SOURCE CATEGORIES CURRENTLY REGULATED BY EFFLUENT GUIDELINES IDENTIFIED DURING OUTREACH—Continued

Industry	Formal comment process		Previous outreach	Draft stratey outreach		Rationale
	Comments on draft strategy	Comments on 2002/2003 plan		Permitting authorities	AMSA and/or ASWIPCA [1]	
Coil Coating				✔		(3)
Dairy Products Processing			✔			(4)
Electrical and Electronic Components.				✔		(4)
Electroplating	✔					(1)
Fertilizer Manufacturing			✔	✔		(4)
Hospitals	✔	✔		✔		(6)
Inorganic Chemical Manufacturing.				✔		See section VII.B.1.
Meat Products			✔	✔	✔	(1)
Metal Finishing	✔		✔	✔	✔	(1)
Metal Molding and Casting	✔		✔	✔	✔	(4) and (5).
Metal Products and Machinery				✔		(1)
Mineral Mining and Processing			✔			(4)
Oil and Gas Extraction (including coal bed methane as new potential subcategory).		✔	✔	✔		(1) and (4).
Ore Mining and Dressing (hard rock mining).		✔	✔	✔		(4)
Organic Chemicals, Plastics, & Synthetic Fibers (including chemical formulating, packaging, and repackaging (including adhesives and sealants) operations as a new potential subcategory).	✔					See section VII.A.1.
Petroleum Refining (including petroleum bulk stations and terminals as a new potential subcategory).			✔	✔	✔	See section VII.A.2.
Pulp and Paper, Subparts B & E (Phase I).			✔	✔		(1)
Pulp and Paper, Subparts C and F through L (Phase II).			✔	✔		(4)
Pulp and Paper, Subparts A & D (Phase III).			✔	✔		(2)
Steam Electric			✔	✔		(4)
Textile Mills			✔	✔		(4)
Timber Products Processing				✔		(4)
Transportation Equipment Cleaning (including industrial container & drum cleaning as a new potential subcategory).	✔					(1) and (6).

[1] **Note:** Association of Metropolitan Sewerage Agencies (AMSA), Association of State and Interstate Water Pollution Control Administrators (ASWIPCA).
[2] **Note:** This column uses the same codes as Table VI–1 to describe the rationales for the Agency's industry-specific decisions.

TABLE VI–3.—INDUSTRY SECTORS CURRENTLY NOT REGULATED BY EFFLUENT GUIDELINES IDENTIFIED DURING OUTREACH

Industry	Formal comment process		Previous outreach	Draft strategy outreach		Rationale [2]
	Comments on draft strategy	Comments on 2002/2003 plan		Permitting authorities	AMSA and/or ASWIPCA [1]	
Airport Industrial Discharges			√			(3)
Aquatic Animal Production			√	√		(1)
Storm Water Discharges from Construction and Development.					√	(1)
Dental Facilities	√	√		√		(4)
Drinking Water Supply & Treatment			√			(2)
Food Service Establishments (SIC 581)	√					(4)
Discharges from Groundwater Remediation				√		(5)
Independent and Stand-Alone Laboratories	√					(4)
Ocean Going Vessels (cruise ships, ballast and bilge water).		√	√			(6)

TABLE VI–3.—INDUSTRY SECTORS CURRENTLY NOT REGULATED BY EFFLUENT GUIDELINES IDENTIFIED DURING OUTREACH—Continued

Industry	Formal comment process		Previous outreach	Draft strategy outreach		Rationale [2]
	Comments on draft strategy	Comments on 2002/2003 plan		Permitting authorities	AMSA and/or ASWIPCA [1]	
Printing and Publishing	√					(4)
Prisons				√		(4)
Municipal Storm Water Runoff			√	√	√	(5)
Wastewater Treatment and Sewerage Systems.			√			(5)

[1] **Note:** Association of Metropolitan Sewerage Agencies (AMSA), Association of State and Interstate Water Pollution Control Administrators (ASWIPCA).
[2] **Note:** This column uses the same codes as Table VIII–1 to describe the rationales for the Agency's industry-specific decisions.

VII. What Will Be the Focus of EPA's 2004 Annual Review?

A. Industrial Point Source Categories EPA Has Identified for Detailed Investigation

As noted in section VI, EPA has identified two industrial categories for detailed investigation in the 2004 annual review: Organic Chemicals, Plastics, and Synthetic Fibers (including Chemical Formulating, Packaging, and Repackaging and Adhesives and Sealants operations) (part 414); and Petroleum Refining (including Petroleum Bulk Stations & Terminals) (part 419). The purpose of the 2004 detailed investigation is to determine whether, in the final Effluent Guidelines Program Plan for 2004/2005, EPA should identify Organic Chemicals, Plastics, and Synthetic Fibers or Petroleum Refining (or both) as the subject of possible rulemaking to revise their existing effluent guidelines. During the 2004 annual review, which will conclude with EPA's publication of the final Effluent Guidelines Program Plan for 2004/2005, EPA intends to collect additional information from NPDES permits, permitting authorities, and specific industry facilities, as well as review data and comments submitted in response to today's notice.

1. Organic Chemicals, Plastics, and Synthetic Fibers (OCPSF)

This industry ranked high in terms of toxic and non-conventional pollutant discharges among all industrial point source categories investigated in the screening level analyses. Of 1,581 facilities classified as OCPSF manufacturing facilities, PCS location data are sufficient to index 578 facilities to their receiving waterbodies. Of these facilities, 205 (35%) are discharging pollutants (*e.g.*, priority organics, nutrients, metals) identified as causing water quality impairments to their receiving streams. EPA has information that suggests there may be demonstrated pollution prevention opportunities and advanced technologies for better treating toxic pollutants and nutrients, and reducing wastewater flow. As part of its review of this industry, EPA will consider whether any subcategories should be added. For example, EPA has identified chemical formulating, packaging, and repackaging (including adhesives and sealants) operations, which is not currently regulated by technology-based effluent guidelines as a possible new subcategory.

Some stakeholders have encouraged EPA to consider revising these effluent guidelines. During outreach efforts, some stakeholders asserted that the structure and scope of part 414 presents a number of permitting and enforcement challenges: (1) Difficulties encountered in correctly calculating and establishing mass-based limits; (2) problems in obtaining the data necessary to determine compliance with mass-based limits; (3) deficiencies in permits and control mechanisms that have hindered enforcement actions against non-compliant facilities; and (4) challenges encountered in determining the correct Standard Industrial Classification (SIC) codes to apply to facilities, which in turn makes it difficult for permit writers to identify the applicable effluent guidelines requirements. Therefore, these stakeholders recommend reevaluating these guidelines to consider more general coverage that is not tied to SIC codes. They also recommend switching from mass-based limits to concentration-based limits because of difficulties in implementing and enforcing mass-based limits.

In comments on the draft Strategy a commenter identified chemical formulating, packaging, and repackaging (including adhesives and sealants) operations as an unregulated subcategory for which effluent guidelines should potentially be developed. EPA intends to review chemical formulating, packaging, and repackaging (including adhesives and sealants) operations for possible inclusion in the OCPSF point source category because of the potential similarities in operations performed, wastewaters generated, and available pollution prevention and treatment options.

2. Petroleum Refining

This industry ranked high in terms of toxic and non-conventional pollutant discharges among all industrial point source categories investigated in the screening level analyses. A large number of petroleum refineries report discharges of toxic pollutants (*e.g.*, priority organics, metals). EPA has information suggesting that there may pollution prevention alternatives opportunities for this industry (*e.g.*, via product substitution), and that treatment technologies (*e.g.*, membrane separation, novel adsorption) may exist to better prevent stormwater contamination and to control effluent discharges from this industrial category.

During outreach, some stakeholders encouraged EPA to consider revising these effluent guidelines. Their suggestions included expanding the list of regulated pollutants to include: (1) Priority pollutants; (2) metals, especially selenium; (3) nutrients (ammonia); (4) biochemical oxygen demand (BOD); and (5) chemical oxygen demand (COD). Stakeholders suggested a review of Best Practicable Technology (BPT), Best Available Technology (BAT), and Best Conventional Pollutant Control Technology (BCT) for accuracy and relevance because the current effluent guidelines were promulgated in 1982.

Some EPA Regional Offices and stakeholders also asserted that the effluent guidelines for this category are outdated relative to the current state of the industry, and should be a priority for revision. These stakeholders argue that not only have the technologies

changed significantly since the guidelines were first issued in 1982, but many refineries have two to four times the throughput than was used when the effluents guidelines were first issued and can probably achieve greater pollutant reductions than they are presently required to achieve. For industries with production based limitations and standards, such as this one, a significant change in production may suggest a need to review the effluent guidelines.

As part of its review of this industry, EPA will consider whether any new subcategories should be added. For example, EPA has identified petroleum bulk stations and terminals, which are not currently regulated by technology-based effluent guidelines, as a possible new subcategory. Some stakeholders identified concerns for discharges from petroleum bulk stations and terminals facilities. EPA intends to consider petroleum bulk stations and terminals (not currently regulated by effluent guidelines) as it reviews the Petroleum Refining point source category (part 419) because of potential similarities in operations performed, wastewaters generated, and available pollution prevention and treatment options.

B. Industrial Point Source Categories EPA Has Identified as the Highest Priority for Further Investigation

EPA intends to address data gaps and uncertainties affecting EPA's estimates of the potential risks and hazards posed by two industrial categories: Inorganic Chemicals (part 414) and Nonferrous Metals Manufacturing (part 421). However, EPA does not anticipate completing its review of these industrial categories in this planning cycle. EPA expects to complete its review of Group II industries for the Effluent Guidelines Program Plan for 2006/2007. Consequently, EPA does not anticipate selecting either of these industrial categories for revision of their effluent guidelines in the final Effluent Guidelines Program Plan for 2004/2005.

1. Inorganic Chemicals

This industry ranked high in terms of toxic and non-conventional pollutant discharges among all industrial point source categories investigated in the screening level analyses. EPA identified this industry as a lower priority than the Organic Chemicals, Plastics and Synthetic Fibers and Petroleum Refining industries based on the following:

- Only a few facilities account for the reported toxic releases. For the Inorganic Chemicals Manufacturing Point Source Category, 12 facilities in the 2000 TRI database account for approximately 90 percent of the reported releases of toxic-weighted pound equivalents (TWPE) to waters of the United States.
- The reported toxic releases are dominated by dioxin. Dioxin and dioxin-like compounds represent approximately 70 percent of the TWPE reported releases to surface waters and three facilities discharge approximately 80 percent of those TWPE. The majority of reported dioxin discharges are from chlor-alkali facilities (SIC 2812).
- Use of industry-specific dioxin toxic weighting factors. Using the best available information, EPA is using different toxic weighting factors for the different dioxin congeners. Further information and data may also affect EPA's estimate of the toxicity associated with these dioxin discharges.
- Low-level mercury discharges reported in PCS account for a substantial part of the TWPE for this industry. Excluding one facility, the average mercury discharge is at a very low concentration, raising issues about the treatability of these discharges.

During outreach efforts, some stakeholders suggested that the Inorganic Chemical effluent guidelines (part 415) should be reevaluated to determine whether the ''no discharge'' requirement is reasonable. Stakeholders stated that there have been substantial changes to this industrial point source category since the effluent guidelines were promulgated in 1982. In particular, stakeholders suggested revising the effluent guidelines with respect to chlor-alkali and nitrous oxide manufacturing. The majority of reported dioxin discharges are from chlor-alkali facilities (SIC 2812). Stakeholders also suggested revising the potassium manufacturing subcategory to address interpretation issues for new sources as to what constitutes process wastewater.

2. Nonferrous Metals Manufacturing

This industry ranked high in terms of toxic and non-conventional pollutant discharges among all industrial point source categories investigated in the screening level analyses. The existing effluent guidelines use SIC codes to determine applicability but in some cases a single SIC code covers facilities not only in this industrial point source category, but also in other categories. Consequently, EPA has begun to conduct further review of the discharges reported in TRI and PCS for this category to ensure that EPA is not double-counting pollutants among two or more categories. This review has already lowered the estimated toxic and non-conventional pollutant discharges attributed to this category and may do so further. EPA also notes that nonferrous metals manufacturing facilities tend to have efficient metals removal from existing treatment-in-place (most metals removals are approximately 99% efficient based on 2000 TRI data).

C. Other Industry Categories

EPA identified seven other industrial point source categories with relatively high estimates of potential hazard or risk based on the screening tools used to evaluate hazard or risk and the information gathered from EPA Regional Offices and stakeholders: fertilizer manufacturing; ore mining and dressing; phosphate manufacturing; pulp and paper (phase II); steam electric power generating; textile mills; and timber products processing. EPA also identified numerous data gaps and issues that may affect the Agency's estimate of the risk or hazard posed by discharges from these industrial point source categories. EPA will continue investigating pollutant discharges from these industrial point source categories, but will assign a higher priority to the industrial categories described in sections VII A. and B. At the present time, the Agency does not have enough information to determine whether the hazard or risk that appears to be posed by these categories warrants revision of the applicable effluent guidelines. Therefore, EPA does not anticipate identifying any of these categories for revision of an effluent guideline in the final Effluent Guidelines Program Plan for 2004/2005.

EPA Regional Offices and outreach efforts identified nine other industrial point source categories as potential candidates for effluent guideline revision: canned and preserved fruits and vegetable processing; canned and preserved seafood processing; coal mining; coil coating; dairy products processing; electrical and electronic components; metal molding and casting; mineral mining and processing; and oil and gas extraction (including coalbed methane extraction). These industries were identified because of potential opportunities to improve efficient implementation of the national water quality program or because their discharges may contribute to water quality problems. EPA evaluated these categories and, based on available data, did not identify hazard or risks that appear to warrant effluent guideline revision. Therefore, EPA does not anticipate identifying any of these categories for revision of an effluent guideline in the final Effluent Guidelines Program Plan for 2004/2005.

VIII. Identification of and Schedule for Possible Categories for Potential New Effluent Guidelines

In its Effluent Guidelines Program Plan, EPA must identify categories of sources discharging toxic or non-conventional pollutants for which EPA has not published effluent limitations guidelines under section 304(b)(2) or new source performance standards (NSPS) under section 306. See CWA section 304(m)(1)(B). For the categories EPA identifies under this provision, EPA must establish a schedule for the promulgation of effluent guidelines not later than three years after such identification. See CWA section 304(m)(1)(C). Today's **Federal Register** notice presents EPA's preliminary decisions under section 304(m)(1)(B).

A. Review Process and Decision Criteria for Industrial Categories for Which EPA Has Not Promulgated Effluent Guidelines

The universe of potential industrial categories subject to section 304(m)(1)(B) is limited. First, and most important, this analysis applies only to industrial categories for which EPA has not promulgated effluent guidelines, not to unregulated subcategories or pollutants within a currently regulated industrial category. Thus, the first decision criterion asks whether the industrial operation or activity in question is properly characterized as an industry ''category.'' The list of ''categories of sources'' set forth at section 306(b)(1)(A) (*e.g.*, pulp and paper mills, organic chemicals manufacturing, steam electric powerplants) suggests that Congress intended that this term should be broadly construed. EPA considers the need to address new subcategories and new pollutants as part of its annual review of existing effluent guidelines. See section VI. EPA believes that the decision whether to revise a guideline to address additional related industrial activities or pollutants should be made in the context of evaluating the promulgated effluent guideline as a whole. For example, as part of its annual review under CWA section 304(m)(1)(A), EPA is reviewing the following industrial operations as potential new subcategories of existing effluent guidelines: (1) Petroleum Bulk Stations and Terminals (SIC 5171) will be reviewed as a potential new subcategory under Petroleum Refining (part 419); and (2) Chemical Formulating, Packaging, and Repackaging (including Adhesives and Sealants) operations will be reviewed as a potential new subcategory under Organic Chemicals, Plastics, and Synthetic Fibers (part 414).

Second, the analysis under CWA section 304(m)(1)(B) applies only to industrial categories to which effluent guidelines under section 304(b)(2) or section 306 would apply, if promulgated. Therefore, for purposes of section 304(m)(1)(B), EPA would not identify industrial categories composed exclusively or almost exclusively of indirect discharging facilities regulated under section 307 or categories like wastewater treatment plants regulated under section 301(b)(1)(B). EPA also believes this criterion should be used to exclude categories where the vast majority of toxic and non-conventional pollutant discharges are accounted for by one or a few facilities. EPA believes that more effective environmental protection can be accomplished sooner for such categories, and with less use of limited Agency resources, by providing site-specific guidance to permit authorities on appropriate limitations and standards based on best professional judgment. This decision criterion acknowledges that other tools created by the Clean Water Act better pollutant discharges from some categories of facilities.

Third, the analysis under CWA section 304(m)(1)(B) applies only to industrial categories of sources that the record shows are making non-trivial discharges of toxic or non-conventional pollutants to waters of the United States. EPA does not believe that it is necessary, nor was it Congress's intent, to develop national effluent guidelines regulations for categories of sources that are likely to pose an insignificant risk to human health or the environment. See S. Rep. No. 50, 99th Cong., 1st Sess. (1985); WQA87 Leg. Hist. 31. This decision criterion leads EPA to focus on those remaining industrial categories where new effluent guidelines have the potential to address an identifiable hazard or risk to human health or the environment. In other words, using this decision criterion, EPA will identify those industrial categories of polluters for which effluent guidelines may be appropriate, based on information available during the development of a particular Effluent Guidelines Program Plan. Thus, EPA might judge in 2004, based on information available at that time, that the toxic and non-conventional pollutant discharges from sources within an industrial category are trivial, and then, based on changes in the industry or new information, reach a different conclusion in 2006 or later. Priority-setting is intrinsic to any planning exercise, and this decision criterion is an important priority-setting tool. Because section 304(m)(1)(C) requires that EPA complete an effluent guidelines rulemaking within three years of identifying an industrial category in a 304(m) plan, it is important that EPA have the discretion to identify only those industrial categories where the risks or hazards are indeed non-trivial. Otherwise, EPA might find itself commencing an effluent guidelines rulemaking when none is actually needed for the protection of human health or the environment. In assessing hazard or risk for purposes of CWA section 304(m)(1)(B), EPA used the same methodology discussed in section VI for reviewing industrial categories with existing effluent guidelines.

B. Outcome of EPA's Analysis Under CWA Section 304(m)(1)(B)

Applying these decision criteria, EPA identified no new candidates for effluent guidelines rulemaking for this preliminary Plan. Consequently, EPA is not proposing to schedule an effluent guidelines rulemaking for any industrial category not already regulated by existing effluent guidelines. EPA's application of these decision criteria to industrial activities without effluent guidelines under sections 304(b) or 306 is presented in Table VIII–1 and in the record (DCN 00548, section 3.0). The ''Rationale'' column in Table VIII–1 uses a numeric coding system to explain why EPA did not identify the industrial activity in this preliminary Plan as a candidate for an effluent guidelines rulemaking:

(1) An effluent guidelines rulemaking for this industry is underway or was recently concluded.

(2) The vast majority of the estimated hazards are limited to only one or a few facilities.

(3) Inadequate data to determine if there are non-trivial discharges; additional data collection on-going.

(4) All or nearly all sources engaged in this industrial activity are indirect dischargers and are not subject to CWA section 304(b) or section 306.

(5) Other CWA controls apply (*e.g.* Uniform National Discharge Standards for armed forces vessels, municipal storm water regulations).

(6) Industrial activity is not subject to CWA permitting requirements.

TABLE VIII–1.—INDUSTRIAL ACTIVITIES FOR WHICH EPA HAS NOT PROMULGATED EFFLUENT GUIDELINES

Industrial activity	Suggested in stakeholder outreach? (Yes/No)	TRI rank	PCS rank	Continue investigation for possible identification for final Effluent Guidelines Program Plan for 2004/2005? (Yes/No)	Rationale
Airport Industrial Discharges	Yes	Not Avail	2	No	(3)
Aquatic Animal Production	Yes	Not Avail	Not Avail	No	(1)
Storm Water Discharges from Construction and Development.	Yes	Not Avail	Not Avail	No	(1)
Dental Facilities	Yes	Not App	Not App	No	(4)
Drinking Water Supply & Treatment.	Yes	1	1	No	(2)
Food Service Establishments (SIC 581).	Yes	Not App	Not App	No	(4)
Discharges from Groundwater Remediation.	Yes	Not App	Not App	No	(5)
Independent & Stand-Alone Laboratories.	Yes	Not App	Not App	No	(4)
Industrial Laundries	No	Not App	Not App	No	(4)
Ocean Going Vessels (cruise ships, ballast and bilge water).	Yes	Not App	Not App	No	(6)
Printing & Publishing	Yes	Not App	Not App	No	(4)
Prisons	Yes	Not App	Not App	No	(4)
Municipal Storm Water Runoff	Yes	Not App	Not App	No	(5)
Wastewater Treatment and Sewerage Systems.	Yes	Not App	Not App	No	(5)

Note: ''Not Avail.'' means that the information was not available using data from TRI or PCS. ''Not App.'' means that this 304(m) ranking was not applicable for this industry, in as much as this industry is not subject to 304(m) effluent guidelines planning.

IX. Request for Comment and Information

EPA invites and encourages public participation in the development of the Effluent Guidelines Program Plan for 2004/2005. The Agency asks that comments address deficiencies in the record of this preliminary Plan and that commenters provide supporting data for suggested revisions or corrections where possible.

EPA particularly requests comments and information on these issues:

A. EPA requests information on the industries recommended for detailed investigation: Organic Chemicals, Plastics, and Synthetic Fibers (40 CFR part 414) and Petroleum Refining (40 CFR part 419). Specifically, EPA hopes to gather the following information:

OCPSF (SIC codes 2821, 2823, 2824, 2865, 2869)

- What is the source (raw material, process, product) of the TRI-reported releases of toxic chemicals, particularly dioxin and dioxin-like compounds, PACs, aniline, and sodium nitrite?
- What control technologies or techniques can be used to reduce the wastewater contamination with these pollutants?
- What toxic chemicals are released from OCPSF facilities, but not reported to TRI or PCS?
- Manufacturers of azo dyes and certain facilities in the rubber industry reported wastewater releases of aniline and sodium nitrite. What is the source (raw material, process, product) of these releases? What control technologies or techniques can be used to reduce wastewater contamination with these pollutants?
- Manufacturers of ethylene dichloride and vinyl chloride monomer reported wastewater releases of dioxin and dioxin-like compounds. What is the source (raw material, process, product) of these releases? What control technologies or techniques can be used to reduce wastewater contamination with these pollutants?

Chemical Formulating, Packaging, and Repackaging (SIC codes 2841, 2842, 2844, 2851, 2891, 2893, 2899)

- What are the sources of wastewaters discharged from these facilities?
- What pollutants (toxic, conventional, and nonconventional) are contained in these wastewaters and at what quantity?
- What control technologies or techniques can be used to reduce the wastewater contamination with these pollutants?
- What is the basis for the discharge limits in NPDES permits issued to facilities in these SIC codes?

Petroleum Refining (SIC code 2911)

- In 2000, why did 19 refineries report surface water and POTW releases of PACs to TRI, while 164 refineries did not report releases?
- What control technologies or techniques can be used to reduce the PACs in refinery wastewaters?
- What is the source of dioxin and dioxin-like compounds in refinery wastewaters?
- What process modifications have been implemented at refineries to reduce the generation of dioxins?
- What is the source of vanadium and other toxic metals in refinery wastewaters?
- What process modifications have been implemented at refineries to reduce the vanadium in refinery wastewaters? Of other toxic metals?
- What toxic chemicals are released from refineries, but not reported to TRI or PCS?

Petroleum Bulk Stations and Terminals (SIC code 5171)

- What is the discharge status (number of facilities with direct, indirect, and zero discharge) of facilities in this SIC code?
- Why or how do certain facilities discharge no wastewater, while other facilities discharge substantial volumes? (off-site disposal, lack of rainfall, 100% recycle/reuse, etc.)
- What is the discharge of toxic pollutants (pollutant concentrations and mass)?
- Is ammonia a typical contaminant in wastewater from facilities in SIC code 5171? What is the source of ammonia at these facilities?

• What are wastewater sources and discharge volumes?

• Are wastewater discharges continuous or intermittent (depending on facility operations, rainfall, or other event)?

• What is the current level of treatment in place?

• One source of contaminated wastewater at PBST facilities is water that accumulates at the bottom of product tanks, known as tank bottom water. How are PBSTs currently managing this wastewater (hauled off-site for contract disposal, mixed with accumulated stormwater and treated on-site, or other means)? What determines how a PBST will dispose of its tank bottom waters? How do PBST facilities manage and treat contact stormwater?

• What is the extent of pollution prevention/recovery practices in place?

• How have EPA's stormwater regulations impacted PBST discharges?

B. EPA requests information on the industries for which the Agency states that there is incomplete data available for analysis (*i.e.*, industrial point source categories with existing effluent guidelines identified with ''(4)'' in the column titled ''Rationale'' in Tables VI–1 and industrial point source categories with no existing effluent guidelines identified with ''(3)'' in the column titled ''Rationale'' in Tables VIII–1). EPA will need to collect more information for the next biennial plan. Specifically, EPA hopes to gather the following information:

• What toxic pollutants are discharged from these industries in non-trivial amounts on an industry and per-facility basis?

• What raw material(s) or process(es) are the sources of these pollutants?

• What technologies are available (technically and economically) to control or prevent the generation and/or release of these pollutants.

C. EPA solicits comments on whether EPA used the correct evaluation factors, criteria and data sources to develop this proposed plan. Please see the record for a more detailed discussion of EPA's analysis supporting this proposal (DCN 00548, section 3.0). Also see the record for more information on how EPA's analysis differed from the analytical framework described in the draft Strategy for National Clean Water Industrial Regulations (DCN 00553, section 3.0). EPA invites comment on the appropriateness of and to suggest improvements to its approach, its identification of relevant data sources and its uses of these data.

D. EPA solicits comments on whether, and if so how, should the Agency provide EPA Regions and States with permit-based support instead of revising effluent guidelines (*e.g.*, when the vast majority of the hazard or risk is associated with one or a few facilities).

E. EPA solicits comment on how to improve its impairment analysis to better characterize and quantify relationships between industrial point sources and impaired waters.

F. EPA solicits comment on the sources of data EPA might use to document industry efforts to voluntarily reduce pollutant discharges. EPA invites commenters to provide any information they have documenting voluntary pollution reductions by any of the industry categories regulated (or potentially regulated) by effluent limitation guidelines.

G. EPA solicits comment on the methodology for grouping industries for review and prioritization and the factors and measures EPA should consider for determining if discharges are trivial.

H. Process additives in use in the steam electric power generation point source category have changed over time. Starting in the early 1990s, some power plants began converting from the use of chlorinated compounds to brominated compounds. However, many of these plants report only total residual oxidant (TRO) as part of their NPDES permit requirements. What additional data sources are available to quantify the amount and type of brominated compounds discharged from this industry?

I. EPA solicits comment on implementation issues related to existing effluent guidelines.

Dated: December 23, 2003.

G. Tracy Mehan III,

Assistant Administrator for Water.

[FR Doc. 03–32214 Filed 12–30–03; 8:45 am]

BILLING CODE 6560–50–P

ENVIRONMENTAL PROTECTION AGENCY

[FRL–7605–8]

Standards for the Use or Disposal of Sewage Sludge; Final Agency Response to the National Research Council Report on Biosolids Applied to Land and the Results of EPA's Review of Existing Sewage Sludge Regulations

AGENCY: Environmental Protection Agency.

ACTION: Notice.

SUMMARY: The U.S. Environmental Protection Agency (EPA) is publishing the results of its review of regulations under the Clean Water Act (CWA) governing the use and disposal of sewage sludge. The Clean Water Act requires that EPA review the sewage sludge regulations for the purpose of identifying additional toxic pollutants and promulgating regulations for such pollutants consistent with the requirements. As part of this review, EPA commissioned the National Research Council (NRC) of the National Academy of Sciences to independently review the technical basis of the chemical and microbial regulations applicable to sewage sludge that is applied to land. In July 2002, the NRC published a report entitled ''Biosolids Applied to Land: Advancing Standards and Practices'' in response to the EPA's request.

In April 2003 EPA announced and requested public comments on a preliminary strategy explaining how EPA planned to respond to the NRC report recommendations. Today, the Agency is announcing its final response, also known as the final action plan, to the NRC report. EPA is also presenting the results of its review of existing sewage sludge regulations to identify additional toxic pollutants in sewage sludge for potential future regulations. Based on a screening assessment of chemical pollutants for which EPA had adequate data (*e.g.*, human health benchmark values, and information on fate and transport in the environment), as well as concentration data in sewage sludge for those pollutants, EPA has identified 15 pollutants for possible regulation. This list constitutes the final results of EPA's current review of existing sewage sludge regulations as required by the CWA. These pollutants will undergo a more refined risk assessment and risk characterization which may lead to a notice of proposed rulemaking under the Clean Water Act. In this notice, the term ''biosolids'' is used interchangeably with ''sewage sludge,'' which is defined in the regulations and used in the statute.

ADDRESSES: The public record for this action has been established under Docket ID No. OW–2003–0006. Materials are available for public viewing at the Water Docket in the EPA Docket Center, EPA West, Room B102, 1301 Constitution Ave., NW., Washington, DC. The EPA Docket Center Public Reading Room is open from 8:30 a.m. to 4:30 p.m., Monday through Friday, excluding legal holidays. The telephone number for the Public Reading Room is (202) 566–1744, and the telephone number for the Water Docket is (202) 566–2426.

FOR FURTHER INFORMATION CONTACT: Rick Stevens, U.S. Environmental Protection

Agency, Office of Water, Health and Ecological Criteria Division (4304T), 1200 Pennsylvania Avenue, NW., Washington, DC 20460. (202) 566–1135. *stevens.rick@epa.gov*.

SUPPLEMENTARY INFORMATION:

General Information

A. Interested Entities

Entities potentially interested in this notice are those who prepare sewage sludge, apply sewage sludge to land, dispose of sewage sludge in a surface disposal unit, or incinerate sewage sludge in a sewage sludge incinerator. Categories and entities include:

Category	Examples of interested entities
State/Local/Tribal Government	Publicly owned treatment works and other treatment works that treat domestic sewage, prepare sewage sludge and/or apply sewage sludge to the land, place sewage sludge in a surface disposal unit, or incinerate sewage sludge.
Federal Government	Federal Agencies with treatment works that treat domestic sewage, prepare sewage sludge and/or apply sewage sludge to the land, place sewage sludge in a surface disposal unit, or incinerate sewage sludge.
Farmers, Ranchers and Home Gardeners	Individuals who apply sewage sludge to land.
Industry	Privately-owned treatment works that treat domestic sewage, as well as persons who receive sewage sludge and change the quality of the sewage sludge before it is applied to the land, place sewage sludge in a surface disposal unit, or incinerate sewage sludge.

This table is not intended to be exhaustive, but rather provides a guide for readers regarding entities likely to be interested in this action. This table lists the types of entities that EPA is now aware could potentially be interested in this action. Other types of entities not listed in the table could also be interested. To determine whether your facility is affected by this action, you should carefully examine today's notice. If you have questions regarding the applicability of this action to a particular entity, consult the person listed in the preceding **FOR FURTHER INFORMATION CONTACT** section.

B. How Can I Get Copies of This Document and Other Related Information?

1. *Docket*. EPA has established an official public docket for this action under Docket ID No. OW–2003–0006. The official public docket consists of the documents specifically referenced in this action, any public comments received, and other information related to this action. Although a part of the official docket, the public docket does not include Confidential Business Information (CBI) or other information whose disclosure is restricted by statute. The official public docket is the collection of materials that is available for public viewing at the Water Docket in the EPA Docket Center, EPA West, Room B102, 1301 Constitution Ave., NW., Washington, DC. The EPA Docket Center Public Reading Room is open from 8:30 a.m. to 4:30 p.m., Monday through Friday, excluding legal holidays. The telephone number for the Public Reading Room is (202) 566–1744, and the telephone number for the Water Docket is (202) 566–2426.

2. *Electronic Access*. You may access this **Federal Register** document electronically through the EPA Internet under the **Federal Register** listings at *http://www.epa.gov/fedrgstr/*.

An electronic version of the public docket is available through EPA's electronic public docket and comment system, EPA Dockets. You may use EPA Dockets at *http://www.epa.gov/edocket/* to view public comments, access the index listing of the contents of the official public docket, and to access those documents in the public docket that are available electronically. Although not all docket materials may be available electronically, you may still access any of the publicly available docket materials through the docket facility identified in section B.1. Once in the system, select ''search,'' then key in the appropriate docket identification number.

C. Abbreviations and Acronyms Used

AMSA—Association of Metropolitan Sewerage Agencies
ASTM—American Society for Testing and Materials
CDC—Centers for Disease Control and Prevention
CFR—Code of Federal Regulations
CPE—Cytopathic Effects
CWA—Clean Water Act
EMS—Environmental Management System
EPA—U.S. Environmental Protection Agency
FQPA—Food Quality Protection Act
HQ—Hazard Quotient
ICC–PCR—Integrated cell culture—polymerase chain reaction
ICMA—International City/County Management Association
IRED—Interim Reregistration Eligibility Decision
IRIS—Integrated Risk Information System
ISG—Information Sharing Group
LGEAN—Local Government Environmental Assistance Network
NBP—National Biosolids Partnership
NPDES—National Pollutant Discharge Elimination System
NODA—Notice of Data Availability
NRC—National Research Council
NSSS—National Sewage Sludge Survey
OPP—Office of Pesticide Programs
OW—Office of Water
PCBs—Polychlorinated biphenyls
PCDDs/Fs—Polychlorinated dibenzo-p-dioxins/dibenzofurans
PCR—polymerase chain reaction
PCS—Permit Compliance System
PEC—Pathogen Equivalency Committee
PFRP—Process to Further Reduce Pathogens
POTW—Publicly Owned Treatment Works
PPCPs—Pharmaceutical and Personal Care Products
PSRP—Processes to Significantly Reduce Pathogens
QA/QC—Quality Assurance/Quality Control
QMRA—Quantitative Microbial Risk Assessment
RED—Reregistration Eligibility Decision
RME—Reasonable Maximum Exposure
SOP—Standard Operating Procedure
SSI—Sewage Sludge Incinerator
TBD—Technical Background Document
UA—University of Arizona
USDA—United States Department of Agriculture
VOC—volatile organic compounds
WEF—Water Environment Federation
WERF—Water Environment Research Foundation

Table of Contents

I. What is the Legal History of the Standards for the Use or Disposal of Sewage Sludge?
II. What Requirements are Included in the Standards for the Use or Disposal of Sewage Sludge (40 CFR Part 503)?
III. What Is the Purpose of Today's Notice?
IV. What Was EPA's Charge to the National Research Council?

V. What Were the National Research Council's Major Findings and Recommendations Concerning Land Application of Sewage Sludge?
VI. What Process did EPA Use to Address the NRC Recommendations?
VII. EPA's Final Action Plan to Address NRC Recommendations
VIII.Process to Review Part 503 Regulations under the CWA Section 405(d)(2)(C)
IX. Hazard-Based Screening Assessment
X. Results of the Review of the Part 503 Regulations under CWA Section 405(d)(2)(C)
XI. References

I. What Is the Legal History of the Standards for the Use or Disposal of Sewage Sludge?

In section 405 of the CWA, Congress, for the first time, set forth a comprehensive program designed to reduce potential health and environmental risks and maximize the beneficial use of sewage sludge. As amended, section 405(d) of the CWA requires EPA to establish numerical limits and management practices that protect public health and the environment from the reasonably anticipated adverse effects of chemical and microbial pollutants in sewage sludge. Section 405(e) prohibits any person from disposing of sewage sludge from publicly owned treatment works (POTWs) or other treatment works treating domestic sewage except in compliance with regulations promulgated under section 405.

Section 405(d) calls for two rounds of sewage sludge regulations and sets deadlines for promulgation. In the first round, EPA was required to establish numerical limits and management practices for those toxic pollutants that, based on ''available information on their toxicity, persistence, concentration, mobility, or potential for exposure, may be present in sewage sludge in concentrations that may adversely affect public health or the environment.'' *See* CWA section 405(d)(2)(A). EPA was then required to undertake a second round of rulemaking, to address toxic pollutants not regulated in the first round ''which may adversely affect public health or the environment.'' *See* CWA section 405(d)(2)(B).

EPA did not meet the section 405(d) timetable for promulgating the first round of regulations, and a citizen's suit was filed to require EPA to fulfill this mandate. *See Gearhart* v. *Reilly*, Civ. No. 89–6266–HO (D. Ore.). A consent decree was entered by the court in this case, establishing schedules for both rounds of sewage sludge rules. EPA promulgated the first rule (''Round One'') on February 19, 1993 (40 CFR part 503, 58 FR 9248). The consent decree required the Administrator to sign a notice proposing Round Two regulations no later than December 15, 1999, and to sign a notice taking final action on the proposal no later than December 15, 2001.

For the second round (''Round Two''), EPA identified 31 pollutants and pollutant categories not regulated in Round One that EPA was considering for regulation. In November 1995, EPA narrowed the original list of 31 pollutants to two pollutant groups for the second round rulemaking: polychlorinated dibenzo-p-dioxins/dibenzofurans (PCDDs/Fs) and dioxin-like coplanar polychlorinated biphenyls (PCBs) (USEPA, 1996).

On December 15, 1999, the Administrator signed a proposal to establish numerical limits for chlorinated dibenzo-p-dioxin, chlorinated dibenzofurans, and co-planar PCBs (''dioxins'') in sewage sludge that is applied to the land and proposed not to regulate dioxins in sewage sludge that is disposed of in a surface disposal unit or fired in a sewage sludge incinerator. 64 FR 72045 (December 23, 1999). On December 21, 2001, the Administrator gave final notice of EPA's determination that numerical standards or management practices are not warranted for dioxins in sewage sludge that is disposed of at a surface disposal unit or a sewage sludge incinerator. 66 FR 66228 (December 21, 2001). The consent decree in *Gearhart* v. *Whitman* was amended to extend the deadline for final action on the land application Round Two rulemaking from the original date of December 15, 2001, to a new date of October 17, 2003.

On June 12, 2002, EPA published a Notice of Data Availability (NODA) containing new information relating to dioxins in land-applied sewage sludge and requested public comments. 67 FR 40554. On October 17, 2003, the Administrator signed a notice for publication in the **Federal Register** announcing EPA's decision that regulation of ''dioxins'' in land-applied sewage sludge was not needed to adequately protect human health and the environment. 68 FR 61084 (October 24, 2003).

Section 405(d)(2)(C) requires EPA to biennially review existing sewage sludge regulations for the purpose of identifying and regulating additional toxic pollutants in sewage sludge to adequately protect human health and the environment from the reasonably anticipated effects of such pollutants. The Agency commissioned the NRC to independently review the technical basis of the chemical and microbial regulations governing land application to help address the human health concerns raised by the public and to fulfill the requirement for periodic reassessment of the Standards for Use or Disposal of Sewage Sludge. The NRC study took place between January 2001 and June 2002. In July 2002, the NRC published a report entitled, ''Biosolids Applied to Land: Advancing Standards and Practices'' in response to EPA's request. The NRC identified a need to update the scientific basis of part 503 and provided approximately 60 recommendations.

EPA entered into an agreement with the parties in *Gearhart* v. *Whitman*, to publish a notice in the **Federal Register** describing how the Agency intends to respond to the NRC report recommendations and to seek public comment on its planned response. EPA also agreed to review publicly available information to identify additional toxic pollutants in sewage sludge and to publish a notice and seek public comment on the results of the review. Fulfilling these commitments, EPA published a notice in the **Federal Register** on April 9, 2003 (68 FR 17379). EPA also agreed to publish its final response to the NRC recommendations and the final results of its review under section 405(d)(2)(C). Today's Notice fulfills this agreement.

II. What Requirements Are Included in the Standards for the Use or Disposal of Sewage Sludge (40 CFR Part 503)?

CWA section 405(d)(2)(A) required the first round of regulation to be based on ''available information on [the] toxicity, persistence, concentration, mobility, or potential for exposure'' of toxic pollutants in sewage sludge. EPA published the Round One standards (40 CFR part 503) on February 19, 1993, establishing requirements for the final use or disposal of sewage sludge when it is: (1) Applied to the land for a beneficial purpose, including in home gardens, (2) placed in a surface disposal site, including sewage sludge-only landfills, or (3) incinerated.

For land application, EPA set numerical limits for nine metals in sewage sludge, established operational standards (described later in this notice) to reduce or eliminate pathogens in sewage sludge and to reduce vector attraction, and required management practices to restrict the application rate and placement of sewage sludge on the land. For surface disposal in sewage sludge-only units, part 503 includes numerical limits for three metals in sewage sludge, requirements for the placement and management of a surface disposal site, and operational standards

to reduce or eliminate pathogens in sewage sludge and to reduce vector attraction. For incineration in a sewage sludge incinerator (SSI), EPA establishes limits for five metal pollutants in sewage sludge fired in a SSI and adopted standards under the Clean Air Act for two additional metal pollutants. The Agency has also established performance standards for SSIs through an operational standard for total hydrocarbons or carbon monoxide emissions that controls numerous organic compounds found in the emissions of sewage sludge incinerators. Part 503 also allows disposal of sewage sludge in a municipal solid waste landfill that meets the requirements of 40 CFR part 258. In addition, the final rule requires monitoring, record keeping, and reporting. Standards apply to publicly and privately-owned treatment works that generate or treat domestic sewage sludge and to anyone who uses or disposes of sewage sludge.

The Part 503 Standards consist of seven elements designed to work together to protect human health and the environment. These elements are:

(1) General requirements,
(2) Numerical limits for certain pollutants,
(3) Management practices,
(4) Operational standards,
(5) Monitoring,
(6) Recordkeeping, and
(7) Reporting.

An example of a general requirement in the standards is the provision, applicable to all land-applied sewage sludge, for sewage sludge preparers to obtain information on the nutrient content of the sewage sludge and pass this information to land appliers so that the land appliers can comply with the requirement to apply the sewage sludge at a suitable agronomic rate. Numerical pollutant limitations for certain pollutants in land-applied sewage sludge are expressed as pollutant concentrations in sewage sludge or as cumulative or annual loading rates of pollutants applied on receiving soils. Management practices prescribe how the sewage sludge is to be placed on the land or otherwise managed in the environment. For example, one management practice prohibits the application of sewage sludge to land closer than 10 meters from waters of the United States. Operational standards are technology requirements such as process descriptions and performance requirements to reduce or eliminate pathogens from sewage sludge and to reduce vector attraction. These technology-based requirements, together with required crop harvesting restrictions and site controls, constitute the approach for the control of pathogens in sewage sludge.

Under part 503, monitoring of chemical and microbial pollutants in sewage sludge and certification of certain actions by the preparer or land applier must be performed at a frequency commensurate with the annual amount of land-applied sewage sludge. Sewage sludge preparers and land appliers must keep records of these monitoring and certification activities. Finally, sewage sludge preparers and land appliers must report this information to the permitting authority (EPA or States authorized to administer the program) at least annually.

EPA has amended part 503 several times since its initial publication in February 1993. Following promulgation of the Round One rule, several petitions were filed that challenged various aspects of the rule. In one petition, mining and chemical concerns successfully challenged the land application molybdenum limits. EPA amended the numerical standards for molybdenum to delete the cumulative loading rate, annual loading rate, and the pollutant concentration in sewage sludge to be land-applied. 59 FR 9095 (February 25, 1994). The Agency retained the ceiling concentration value for molybdenum. Also, in the same **Federal Register** notice, EPA added to the sewage sludge incinerator requirements continuous monitoring of carbon monoxide as an alternative to continuous monitoring of total hydrocarbons. In addition, the court remanded several of the land application requirements as a result of petitions for review challenging various other land application standards (*Leather Industries of America* v. *EPA*, 40 F.3d 392 (D.C. Cir. 1994)). EPA deleted all numerical standards for chromium in sewage sludge to be land-applied and adjusted the limit for selenium as a result of that decision. 60 FR 54764 (October 25, 1995). In August 1999, EPA amended part 503 to make a number of technical amendments, provide regulatory flexibility, and make the sewage sludge incinerator standards self-implementing. 64 FR 42552 (August 4, 1999).

For a detailed discussion of the part 503 rule, see *A Plain English Guide to the EPA Part 503 Biosolids Rule (1994)*. A copy of the Plain English Guide is available at the EPA Web site at *http://www.epa.gov/owm/mtb/biosolids/503pe/index.htm*.

III. What Is the Purpose of Today's Notice?

In today's **Federal Register** notice, the Agency describes its final action plan to address the NRC recommendations. In addition, EPA is stating the final results of its review under section 405(d)(2)(C) of the CWA and is identifying 15 additional toxic pollutants in sewage sludge that will be further evaluated for potential regulation. As described later, EPA has considered public comments and other factors in developing its action plan and in identifying additional toxic pollutants in its review of existing regulations under section 405(d)(2)(C).

IV. What Was EPA's Charge to the National Research Council?

EPA asked the NRC to evaluate the scientific basis of EPA's current regulations and standards for chemical pollutants and microbial pollutants (pathogens) in sewage sludge that is land-applied. Specifically, EPA asked the NRC to focus on the adequacy and appropriateness of the risk assessment methods and data that the Agency used in setting regulatory requirements to protect human health. The NRC convened the Committee on Toxicants and Pathogens in Biosolids Applied to Land (''the Committee''), which conducted the evaluation and prepared a final report. The Statement of Tasks included the following:

1. Review the risk assessment methods and data used to establish concentration limits for chemical pollutants in biosolids to determine whether they are the most appropriate approaches.
2. Review the current standards for pathogen reduction or elimination in biosolids and their adequacy for protecting public health.
3. Explore whether approaches for conducting pathogen risk assessment can be integrated with those for chemical risk assessment.

The April 9, 2003, notice (68 FR 17379) contains additional details regarding EPA's charge to the NRC.

V. What Were the National Research Council's Major Findings and Recommendations Concerning Land Application of Sewage Sludge?

The NRC Committee concluded that ''There is no documented scientific evidence that the part 503 rule has failed to protect human health. However, additional scientific work is needed to reduce persistent uncertainty about the potential for adverse human health effects from exposure to [sewage sludge].'' The Committee recognized that land application of sewage sludge is a widely used, practical option for managing the large volume of sewage sludge generated at waste water treatment plants that otherwise would

be disposed of at landfills or by incineration. The Committee also identified a need to update the scientific basis of part 503 to ensure that the current chemical and microbial standards are supported by current scientific data and risk assessment methods. They also recommended that the EPA demonstrate effective enforcement of part 503 and validate the effectiveness of sewage sludge management practices.

The NRC report contains four overarching recommendations: (1) Use improved risk assessment methods to better establish standards for chemicals and pathogens, (2) conduct a new national survey of chemicals and pathogens in biosolids, (3) establish an approach to human health investigations, and (4) increase the resources devoted to EPA's biosolids program. These four overarching recommendations are discussed in detail and supplemented by around 56 individual recommendations contained in Chapters 2–6 of the NRC report. The April 9, 2003 notice (68 FR 17379) contains additional details regarding these findings.

VI. What Process Did EPA Use To Address the NRC Recommendations?

The April 9, 2003, **Federal Register** notice (68 FR 17379) contains details concerning this process. To summarize, upon release of the NRC report, EPA established a committee to respond to the recommendations in the report. The committee includes EPA representatives from a cross-section of offices that are involved or interested in the sewage sludge program. The committee identified and prioritized each NRC recommendation, and developed a preliminary strategy to carry out the activities identified in response to the NRC recommendations. In section VII of the April 9, 2003, **Federal Register** notice (68 FR 17384), EPA presented its preliminary strategy for responding to the NRC recommendations. The section presented three main objectives for attaining a better understanding of sewage sludge and reducing the potential for, or reducing the uncertainty related to, human health impact: (1) Update the scientific basis of part 503 by conducting research in priority areas, (2) strengthen the biosolids program by evaluating results of completed, ongoing, or planned studies both within and outside EPA, and (3) continue ongoing activities for enhancing communications with outside associations and with the public.

EPA then presented responses to the NRC recommendations and a planned strategy by specific categories: (1) Survey; (2) exposure; (3) risk assessment; (4) methods development; (5) pathogens; (6) human health studies; (7) regulatory activities; and (8) biosolids management *See* section VIII of the April 9 notice, 68 FR 17384–17393.

The format of today's notice differs from the April 9, 2003, notice. In today's notice, EPA is presenting a final action plan that includes specific projects that are an outgrowth of the categories presented in the April 9, 2003, notice, in response to many comments that the Agency was too vague in its presentation of preliminary strategies. EPA weighed several factors in determining its final action plan: (1) Major concerns presented in public comments received on the April 9, 2003, notice; (2) the findings of the Water Environment Research Foundation (WERF) Research Summit in July 2003; (3) EPA's existing research commitments in response to areas in the NRC report; and (4) feasibility of responding to specific areas given available resources.

VII. EPA's Final Action Plan To Address NRC Recommendations

A. Background

On April 9, 2003, EPA published a preliminary strategy in the **Federal Register** (68 FR 17379) to prioritize projects to respond to the NRC recommendations and to add value to the Agency's sewage sludge program. The notice summarized the NRC recommendations by category and presented EPA's evaluation of the recommendations and planned responses, and requested public comments. EPA received nearly 100 comments from States, citizens, the sewage treatment and land application industries, environmental groups, and academia. Comments ranged from support for Agency commitments and its preliminary response strategy to seeking a complete overhaul of EPA's sewage sludge program as well as for EPA to implement all of the NRC's recommendations. All comments and the Agency responses are included in the docket in a separate *Response to Public Comments Document* (USEPA, 2003d).

In the time since the NRC issued its report in 2002, EPA has taken steps to enhance its research program to improve the sewage sludge program and to begin implementing recommendations by the NRC. Much of EPA's research complements work being done by others outside the Agency, such as the research projects and the research issues identified at the July 2003 Biosolids Research Summit sponsored by the Water Environment Research Foundation (WERF). EPA plans to participate in and/or use, as appropriate, outside research, in conjunction with EPA-specific research, in order to make the most of the Agency's limited resources and to enhance the part 503 program. EPA's research program includes projects that will be initiated or completed in the near term (*i.e.*, through 2005).

The Agency does not have sufficient resources to implement all of the NRC recommendations, but we do agree that certain projects can help reduce the persistent uncertainty related to exposure to sewage sludge. EPA plans to review and evaluate completed research projects, both inside and outside EPA, as well as complete or begin other projects, to improve the basis for conducting risk assessments and upgrading the basis for the part 503 regulations or improving management practices. Therefore, EPA has developed this final action plan in response to the NRC recommendations with consideration of public comments on the April 9, 2003, preliminary strategy, information gathered from broad stakeholder input received through the WERF Research Summit, and Agency priorities and resource availability. This final action plan is based on fiscal year (FY) 2004 estimated resources. For planning purposes, the Agency has assumed the same level of funding (*i.e.*, at the estimated FY 2004 level) for future years; however, EPA recognizes that funding for FY 2005 and thereafter is subject to final appropriations.

There are two projects in the Agency's preliminary strategy (68 FR 17379), re-evaluation of the risk assessment used for pollutants regulated or evaluated in Round One and a molecular pathogen tracking exposure study, that EPA has decided not to do given all ongoing studies presented in this action plan, changing priorities, and limited resources. In addition, the latter project was intended to focus on individuals who have received medical attention and who suspect that they have been affected by sewage sludge application practices to potentially isolate causative agents. The Agency believes that such a study may still have merit, but in order to respond to reported incidences of human illnesses and adverse health effects alleged to have been caused by land application of sewage sludge, EPA believes that it should include various stakeholders who have had experiences with incidences related to sewage sludge, stakeholders who may be interested in participating, and those

who have the expertise and should take part in helping to develop such a program. For this reason, EPA will participate in an incident tracking workshop to bring these stakeholders together and determine the next steps. See Project 6 later in this notice.

B. Near-Term Projects (FY 2004 through FY 2005)

The Agency expects to complete or begin the following activities, presented in this notice as ''projects,'' within the next two to three years, with the goal of strengthening the sewage sludge use and disposal program. The sewage sludge program encompasses regulatory and non-regulatory components, as described in these projects.

Project 1: Biennial Review Under CWA Section 405(d)(2)(C)

As described above, the CWA requires EPA to review existing sewage sludge regulations at least every two years for the purpose of identifying additional pollutants for possible regulation under the CWA section 405(d)(2)(C).

This project relates to Category G, Regulatory Activities, in the April 9, 2003, notice. See 68 FR 17390. It also relates to major short-term and major long-term goals of continuing program implementation outlined in that notice. For the current biennial review, EPA has assessed available data on chemical pollutants that have been detected in sewage sludge and that have not been regulated or previously assessed in Rounds One and Two. EPA collected and conducted a preliminary review of publicly available information on chemical toxicity, environmental properties (*e.g.*, mobility and persistence), and concentration; identified chemical pollutants for which appropriate analytical methods and human health benchmarks are available; made preliminary determinations regarding sufficiency of information; and conducted an exposure and hazard-based screening assessment. Details are presented in Sections VIII through X of this notice.

In addition to any regulatory amendments that EPA may propose as a result of the current review, EPA is planning to assess the need and appropriate levels for new numerical limitations for molybdenum in land-applied sewage sludge. See Project 13 later in this notice.

Subsequent reviews will be conducted every two years as required by the CWA. EPA will review any new peer-reviewed research and other relevant information to determine whether to identify any additional toxic pollutants for regulatory consideration. This biennial review process may also be useful for identifying toxic pollutants that may warrant further research.

Project 2: Compliance Assistance and Enforcement Actions

As indicated in the Agency's preliminary strategy of April 9, 2003 (*see* 69 FR 17391), and this final action plan, EPA will continue to provide compliance assistance to individuals, municipalities, or other entities on matters pertaining to sewage sludge use and disposal and will take enforcement actions, as appropriate. This project relates to Category H, Biosolids Management Activities, in the April 9, 2003, notice. *See* 68 FR 17391.

EPA has maintained an active presence in biosolids compliance and enforcement activities. EPA's enforcement and compliance activities are tracked in the Integrated Compliance Information System (ICIS) and Permit Compliance System (PCS) databases. Specifically, the ICIS database documents the following Federal enforcement actions taken to address biosolids: 391 administrative orders for FY 1995–2002, 119 administrative penalty orders for FY 1995–2002, and one civil judicial action in FY 1997. The PCS database documents 382 regional and state biosolids inspections for FY 2000–2002.

Furthermore, EPA Regions and States have the responsibility to address situations where compliance assistance and enforcement actions to address biosolids are appropriate and necessary. Regional responsibilities for the biosolids program include actively following up on phone calls and complaints received from the public, and, where appropriate as demonstrated by the data, initiating Agency enforcement actions. EPA has taken enforcement actions and/or appropriate administrative remedies to address biosolids violations of 40 CFR part 503 and will continue to take such actions, including instances where biosolids pose an imminent and substantial endangerment to human health or the environment.

To assist the States and Regions in their oversight of the biosolids program, EPA has, either in place or in development, tools to assist and promote compliance with biosolids regulatory requirements. The National Pollutant Discharge Elimination System (NPDES) Compliance Inspection Manual, which is used by EPA and State inspectors to perform inspections in the field, includes a ''Sludge (Biosolids)'' chapter. EPA is currently revising and updating the manual, which is expected to be complete in 2004. The Clean Water Act/NPDES Computer Based Inspector Training CD-ROM, including a module specific to biosolids inspections, was finalized in August 2003. EPA plans to make both of these tools available on the EPA Web site.

Additionally, there are two compliance assistance Web sites, which are available for biosolids compliance studies, information and tools, and for links to other sites with pertinent biosolids compliance information. One is the National Environmental Compliance Assistance Clearinghouse at: *http://cfpub.epa.gov/clearinghouse/*. This site is a searchable clearinghouse of compliance assistance materials. The second Web site is the Local Government Environmental Assistance Network (LGEAN) at *http://www.lgean.net.* This online compliance assistance center, which focuses on local government environmental requirements, is operated by the International City/County Management Association (ICMA), and has six other partners representing local government.

EPA is also working to improve its data reporting and management system that supports compliance oversight. EPA is continuing to work with States as it modernizes the Permit Compliance System (PCS) to allow for more effective program oversight. As part of the PCS modernization, a separate workgroup (including States and EPA) was devoted to the data needed to manage the biosolids program. Based upon the recommendations of this workgroup, the PCS Executive Council decided to add data elements to PCS to improve tracking and oversight of the biosolids program, and the draft detailed design was distributed for review. The detailed design document was finalized in September 2003, which served as the basis for the software development. The anticipated implementation date for the modernized PCS is December 2005, provided adequate funding is committed to this project.

The land application of sewage sludge in compliance with EPA's regulations is an appropriate choice for communities. The NRC concluded that ''There is no documented scientific evidence that the part 503 rule has failed to protect human health. However, additional scientific work is needed to reduce persistent uncertainty about the potential for adverse human health effects from exposure to biosolids.'' Thus, EPA has directed its water enforcement and compliance resources to focus on risks posed by wet weather issues and untreated pollutants, including raw sewage and wastes associated with storm water, sanitary sewer overflows, combined sewer

overflows, and concentrated animal feeding operations. Both agriculture and urban runoff/storm sewers are listed in the top four sources of impaired river miles in the 2000 National Water Quality Inventory Report to Congress (section 305(b) report). Given the complexity and magnitude of addressing potential human exposures to pathogens and chemicals from untreated human and animal wastes from wet weather and the present scientific knowledge of the relative risks associated with biosolids, there is an appropriate level of resources allocated to biosolids compliance and enforcement activities.

Project 3: Methods Development, Optimization, and Validation for Microbial Pollutants in Sewage Sludge

EPA's sewage sludge regulations are designed to protect human health and the environment by requiring treatment of sewage sludge to reduce or eliminate pathogens (also referred to as microbial pollutants) when land-applied (40 CFR part 503, subpart D). The regulations require that land-applied sewage sludge meet either Class A or Class B requirements to treat sewage sludge using one of various treatment processes. There are six alternative methods, one of which must be met to be classified as Class A sewage sludge. In addition, in order to be classified as Class A sewage sludge, the pathogen reduction treatment must occur prior to or in conjunction with vector attraction reduction measures, except for vector attraction reduction by alkali addition or drying. To be classified as Class B sewage sludge, one of three alternative treatment methods must be met. Because these three Class B treatment methods do not reduce pathogens to the same extent as the Class A methods, Class B sewage sludge is also subject to site restrictions, such as restrictions on crop harvesting, animal grazing and public access.

EPA recently published a document entitled *Environmental Regulations and Technology: Control of Pathogens and Vector Attraction in Sewage Sludge* (USEPA, 2003e). This document provides information concerning federal requirements under subpart D of part 503, a description of different treatment processes, vector attraction reduction issues, sampling and analysis protocols for pathogens, the process for applying for equivalency, and the kind of support EPA's Pathogen Equivalency Committee (PEC) can provide to permitting authorities. This publication not only serves to assist the user community and to link researchers with their clients, but also has been produced as part of the Agency's strategic long-term research plan for preventing and reducing risks from pollution that threaten human health and the environment.

The NRC recommended that EPA undertake a new national sewage sludge survey to look for pathogens in sewage sludge. In addition, the NRC report identified standardization and validation of methods for detection and enumeration of indicator organisms and specific pathogens as essential for oversight and compliance testing. Raw sewage, anaerobically and aerobically digested sewage sludge, and wastewater are known to contain numerous residual microorganisms that can cause disease in humans and animals. These include viruses, bacteria, protozoans and helminth ova. As described in the April 9, 2003, notice, EPA agrees that pathogens deserve further attention, and the Agency had sponsored a workshop in 2001 and initiated a number of studies (*see* Project 11). Pathogen projects relate back to Category D, Methods Development, and Category E, Pathogens, in the April 9, 2003, FR notice. See 68 FR 17388.

Several commenters stated that there is an urgent need for EPA to develop and validate methods for detection and enumeration of bacteria and viruses in sewage sludge, soil, water and air. EPA agrees and recognizes that reliable analytical methods are critical to measuring pathogens in sewage sludge, whether ''raw'' or ''finished.'' Therefore, one of the Agency's priority microbial agent research areas is the development or improvement of analytical methodology. The following sections describe the available methods for helminth ova, viruses, and bacteria, each of which are in need of improvement to increase analytical specificity, sensitivity, and accuracy.

It was also suggested that EPA propose a vigorous study program to determine whether or not Class B sludge site restrictions are protective against infectious diseases. The greatest number of pathogen-related comments were directed to the issue of EPA's response regarding risk assessment, treatment efficacy, and site-specific restrictions for both Class A and B Sewage sludge. Some recommended the sewage sludge industry be involved in study efforts because of their experience in the area, while others recommended against industry involvement because of their potential bias. EPA plans to improve the methods and procedures for determining the effectiveness of these pathogen reduction or elimination treatment processes.

In addition to developing and improving the microbial analytical methods described below, WERF and EPA are funding research termed quantitative microbial risk assessment (QMRA), as described in ''A Dynamic Model to Assess Microbial Health Risks Associated with Beneficial Uses of Biosolids' (WERF, 2003). *See* Project 8 later in this notice for a description of the QMRA project.

Project 3a: Optimization of the Method for Detecting, Enumerating, and Determining the Viability of Ascaris Ova in Sewage Sludge

The goal of this project is to optimize the helminth ova method for the detection in the various sewage sludge matrices in order to assess the effectiveness of treatment practices meant to inactivate ova. The helminth (*Ascaris*) ova assay described in *Environmental Regulations and Technology: Control of Pathogens and Vector Attraction in Sewage Sludge* (USEPA, 2003e) has been used a number of times, it is time consuming, and it has never been fully optimized and validated for the various sewage sludge matrices.

The first stage will optimize the assay for various sewage sludge matrices. The next stage will be a single laboratory validation followed by multi-laboratory validation of the assay. We anticipate that this research will be conducted over the next three years. Products include publication of one or more scientific papers characterizing the *Ascaris* ova assay for the various sewage sludge matrices and a standard operating procedure (SOP) detailing the optimal method for laboratory validation studies by 2007.

Project 3b: Improved Methods for Detecting Viruses in Sewage Sludge

EPA will develop improved virus detection methods for evaluating treatment technology efficacy. Some members of EPA's PEC, an ongoing committee charged with making recommendations on the adequacy of new sewage sludge treatment processes, and the NRC have questioned the reliability of existing virus methods for analysis of sewage sludge matrices. The PEC has recommended research that would improve the reliability of available analytical methods.

40 CFR 503.8(b) specifies methods that must be used when analyzing for various pathogens. The publication *Environmental Regulations and Technology: Control of Pathogens and Vector Attraction in Sewage Sludge* (USEPA, 2003e) lists the required pathogen methods, along with complete references for these methods. The appropriate method to test for enteric

viruses when monitoring is required, according to this publication, is the American Society of Testing and Materials (ASTM) Method D4994–89. Although Method D4994–89 was validated in a multi-laboratory study, the Method achieves only partial recovery of virus from sewage sludge and laboratories are sometimes allowed to use their own standard virus plaque assays. This results in wide variations in virus levels and types recovered from various sewage sludge samples, calling into question the utility of the method. Furthermore, Method D4994–89 is labor intensive, making it difficult for many laboratories to undertake.

Several groups have proposed simpler methods which may yield higher virus recoveries than Method D4994–89. However, limited data are available to evaluate these methods. EPA supports the concept of performance-based methods, and the PEC would accept data from simpler methods, if shown to be at least as effective as Method D4994–89. Therefore, the Agency has developed a research plan to improve analytical methods for viruses and anticipates this work to be completed in 2005. The goal is to have improved methods with higher sensitivity, specificity, and accuracy for detecting viruses in sewage sludge. One objective in this plan is to demonstrate whether other methods are comparable to Method D4994–89. Methods will be compared for their ability to recover viruses that are naturally present in sewage sludge in addition to their ability to recover seeded viruses.

The plaque assay was used for virus detection in the initial round-robin testing of Method D4994–89. This quantitative assay relies upon the development of virus-induced plaques within cell culture monolayers. A most probable number (MPN)-based method for measuring cytopathic effect (CPE) in cell cultures may prove a more useful assay as this is reported capable of detecting viruses at 2-to 100-fold lower concentrations than plaque assays, with the higher sensitivities observed for environmental water samples.

The plaque assay and the MPN-based CPE assays are limited because it fails to detect many of the most important human enteric viral pathogens. Thus, they may provide limited data on whether viral pathogens are inactivated by sewage sludge treatment processes. A new assay has been developed that combines the advantages of cell culture (*e.g.*, detection of infectious particles only) and polymerase chain reaction (PCR) techniques for rapid detection of important human viral pathogens. The Agency will evaluate this integrated cell culture—PCR (ICC–PCR) assay to determine whether previously undetectable human enteric viral pathogens are present in sewage sludge.

Method validation will be accomplished by comparing Method D4994–89 using plaque, MPN, and ICC–PCR assays for seeded and unseeded sewage sludge types. EPA will develop standard operating procedures (SOP) to be further tested on a wide variety of sewage sludge types.

The final objective will be to determine the appropriate virus type to use in seeding viruses in sewage sludge. Utilizing the method described in the SOP, virus recoveries will be compared using a range of virus types, including poliovirus, coxsackievirus, echovirus, and others to be determined. If possible, the Agency will determine recoveries before and after a sewage sludge treatment process. It is estimated that this project will take two years. Products include publication of scientific papers describing the method comparisons and a SOP detailing the optimal method for validation studies.

Project 3c: Development and Validation of Analytical Methods for Fecal Coliform in Sewage Sludge

Fecal coliform bacteria are used as indicators of treatment process effectiveness in the production of Class A and Class B sewage sludge. This ongoing project identifies available methods for enumerating fecal coliforms in sewage sludge, selects the most appropriate methods, determines minimum performance characteristics that must be met, and evaluates these methods in quantifying such organisms using multiple laboratories.

EPA will use multiple laboratories to update and evaluate protocols for assaying fecal coliforms in sewage sludge using multiple tube fermentation techniques and test the method on treated sewage sludge samples using independent laboratories. Samples of Class A and B sewage sludge from full-scale wastewater treatment facilities will be assayed with and without known amounts of *Escherichia coli,* a species of fecal coliform. The Agency will compare the relative performance of individual laboratories performing such tests and develop acceptable standards. The final product, anticipated to be completed in 2005, will be a draft EPA Method 1680 entitled ''Fecal Coliforms in Treated Sewage Sludge by Multiple-Tube Fermentation Procedures.''

Project 3d: Development and Validation of Analytical Methods for *Salmonella* in Sewage Sludge

Many serovars of *Salmonellae* can cause gastroenteritis and typhoid fever. *S. enterica* serovar Typhi is the causative agent for typhoid fever. These bacteria may be used to demonstrate treatment effectiveness of Class A sewage sludge. This project will identify available methods for enumerating *Salmonella* in treated sewage sludge, select the most appropriate methods, evaluate minimal performance characteristics that must be met, and evaluate these methods in quantifying such organisms using multiple laboratories. EPA will develop and test the method on treated sewage sludge samples.

The Agency will update and evaluate protocols for assaying *Salmonella* in sewage sludge using multiple tube fermentation techniques among multiple laboratories. Samples of Class A sewage sludge from full-scale wastewater treatment facilities will be assayed with and without known amounts of *Salmonella.* EPA will compare the relative performance of individual laboratories performing such tests and develop acceptable standards. The final product, to be completed in late FY 2004, will be a draft EPA Method 1682 titled ''*Salmonella* in Sewage Sludge by Modified Semisolid Rappaport-Vassiliadis (MSRV) Medium.''

Project 4: Field Studies of Application of Treated Sewage Sludge

EPA will initiate field studies to evaluate management techniques for treated sewage sludge in order to determine whether the pathogen and chemical requirements of part 503 are being met. These studies, that relate to certain categories discussed in the Agency's preliminary strategy of April 9, 2003, notice (68 FR 17385–17386, 17388–17390), will measure selected indicators of microbial, chemical, and particulate emissions from sewage sludge land application sites and will study the fate of contaminants in the soil to which biosolids are applied. Data resulting from these studies may also be appropriate for inclusion in future risk assessments of biosolids application scenarios.

EPA plans to work with State, Regional, USDA, and other partners to conduct field studies of land application practices at up to five sewage sludge land application sites. Field sampling at actual application sites will involve a variety of media and methods to characterize airborne and soil-bound

contaminants resulting from land application of sewage sludge. Depending on resources, items that will be investigated include, but are not limited to: (1) Quantification of aerosol components such as pathogens, endotoxins, particulate matter, odor compounds, and volatile organic compounds (VOCs); (2) quantification of sewage sludge components such as pathogens and metals, and (3) effects of these components on the soil to which the sewage sludge is applied. Quality Assurance (QA) and specific research plans are being developed. EPA plans to initiate peer review on this research plan in 2004 and field work will not begin until the plan has been peer reviewed. The Agency plans to complete the study and draft a report two years after the QA plan has been approved.

Project 5: Targeted National Survey of Pollutants in Sewage Sludge

As EPA described in the April 9, 2003, **Federal Register** notice, EPA has concluded that undertaking a targeted survey is at present more useful than conducting a comprehensive survey modeled on the 1988–89 National Sewage Sludge Survey (NSSS) (68 FR 17385). Some commenters liked the targeted survey approach, but most commenters requested that EPA consider another national full-scale survey and made suggestions as to which pollutants should be included, or excluded, from such a survey.

Pending results of ongoing research projects and regulatory review, EPA will design and conduct a targeted survey of select chemical pollutants. Microbial pollutants (pathogens) in sewage sludge may also be included, depending on availability of resources and adequacy of methods. A survey may provide feedback for updating the science and technology of sewage sludge applied to land, disposed of in a surface disposal unit, or incinerated. The new concentration data would be used to assess human and ecological risk of identified, unregulated pollutants found in sewage sludge and identify pollutants for potential regulation.

EPA is committed in FY 2005 to starting a limited analytical survey of chemical pollutants found in sewage sludge. EPA expects this survey to address the pollutants identified by the exposure and hazard screening assessment as presenting a potential hazard, as identified in the current section 405(d)(2)(C) biennial review. The Agency will evaluate the extent to which methodology will allow expansion of the survey scope within available resources to include additional pollutants (*e.g.*, the survey may also include metals regulated in Round One using improved methods while surveying for new metals identified as presenting a potential hazard in the current review). *See* section X of this notice for a list of these pollutants.

Furthermore, the results of current research projects may help determine the scope of a survey. The survey design and pollutants to be included in the survey may be influenced based on factors that include:

- Whether to survey pollutants that were not previously detected in sewage sludge, but where new or improved methods are available and other data may indicate a potential for hazard,
- Whether to survey pollutants with reported occurrences in sewage sludge from other countries only (*i.e.*, not studied in U.S. sewage sludge),
- Whether to include pathogens, and
- Whether to include pollutants with a high indication of potential hazard when the scientific basis of the human health benchmarks in IRIS or OPP databases for these pollutants is in the process of reassessment.

EPA will design the survey starting in FY 2005. The Agency will seek stakeholder involvement in the design and implementation of the survey.

Project 6: Participate in an Incident Tracking Workshop

One of the highest research priorities identified by the NRC and participants at the July 2003 WERF Biosolids Research Summit is the need for rapid response investigations of reported health effects potentially resulting from land application practices. EPA also received many public comments urging development of an incident tracking and response process. The Agency agrees that developing an incident tracking program is important. However, the Agency believes that it should not develop an incident monitoring program on its own, but should include various stakeholders who have had experiences with incidents related to sewage sludge, stakeholders who may be interested in participating, and those who have the expertise and should take part in helping to develop such a program.

As stated above, stakeholders who have had experiences with reported incidents related to land application of sewage sludge should be consulted. A program of incident monitoring and investigation could be modeled after an existing program. Once such organization that has experience with such incidents is the State of North Carolina (NC). The North Carolina Department of Environment and Natural Resources is responsible for environmental programs in the state, including biosolids and residuals management. One purpose of the program is to assure timely and meaningful response to perceived and actual environmental incidents. The experiences of NC and others could be helpful in developing such a program and determining the next steps.

In order to respond to reported incidents of human illnesses and adverse health effects alleged to have been caused by land application of sewage sludge, and to determine the appropriate next steps in the process, EPA believes that local and State health agencies, in addition to other Federal health agencies, such as the Center for Disease Control and Prevention (CDC), are positioned best and have the necessary expertise to respond to allegations of adverse health effects following use or disposal of sewage sludge. However, EPA is committed to participating in activities related to this issue and plans to participate in the incident tracking workshop with WERF and other stakeholders in developing the research concepts and methods, and in interpreting and summarizing results.

The first step in the process will take place when WERF assembles stakeholders in a workshop to be held in 2004. EPA will participate in the workshop, which will begin evaluating the next steps for investigating adverse human health allegations following land application of sewage sludge. Ultimately, the objective is to determine whether such reported symptoms of illness can be attributed to the land application of sewage sludge.

The Cornell Waste Management Institute (CWMI) has collected over 300 incidents over the past several years in which residents living near sites where sewage sludge has been applied have reported illness (Cornell Waste Management Institute, 2003; Harrison and Oakes, 2002). However, the CWMI states that it has not been confirmed by scientific investigation that illnesses have resulted from land application of sewage sludge. The information provided by the CWMI may be useful as stakeholders begin to plan for a workshop to address such incidents.

This process, starting with the multi-stakeholder workshop, will take place at least through FY 2005. Additional activities beyond that time frame will depend on the outcome of the workshop, work with local, State and Federal agencies, as well as other stakeholders and availability of resources. Additional activities may include participating in subsequent stakeholder meetings or workshops and

deciding on additional activities and next steps.

Project 7: Conduct Exposure Measurement Workshop

The purpose of this workshop is to identify exposure-related research priorities. This workshop is meant to compliment the objectives of the WERF workshop (*see* Project 6) or be a related follow-up activity that is structured around issues and ideas identified in the WERF workshop. Workshop discussions will focus on exposure measurement tools that researchers or health agencies can use to investigate reports of adverse human health effects from land application of sewage sludge. The discussions and tools will focus on scientific uncertainties related to: (1) Which particular sewage sludge contaminants or combinations of contaminants may be potentially responsible for disease outbreaks; (2) how affected individuals are exposed to these contaminants; (3) how sewage sludge treatment and management practices can reduce potential risks; and (4) how good analytical methods and monitoring have to be to obtain satisfactory answers. The workshop will explore such topic areas for identifying research priorities as methods development, ambient measurements (including spatial and temporal monitoring requirements), fate and transport modeling, and exposure measurements, including identifying the specific exposure routes (*e.g.*, oral and inhalation), exposure pathways (*e.g.*, eating food, drinking water), and contaminants.

Workshop participants would include representatives from EPA; other Federal, State and local agencies; academia; wastewater utilities; environmental groups; industry; and citizen groups. Participants would identify and possibly prioritize what, when, and where measurements should be taken, and how they should be taken during rapid response investigations. EPA will develop a report to summarize discussions and identify the exposure research tools needed to investigate reported incidents of exposure. Pending the results from a similar effort being sponsored by WERF and in which EPA will participate (Project 6), we expect to hold this workshop in 2004.

Project 8: Assess the Quality and Utility of Data, Tools and Methodologies to Conduct Microbial Risk Assessments on Pathogens

The NRC recommended that EPA develop risk assessment methods to apply to pathogenic risks from land application of sewage sludge. While numerical limits for chemical pollutants in sewage sludge are based on assessment of risk, EPA currently regulates pathogens in sewage sludge through technology-based operational standards. In issuing part 503 in 1993, the Agency acknowledged that it lacked essential tools and data to conduct microbial risk assessments on sewage sludge. As the NRC noted, while methods for assessing risks from pathogens have advanced since 1993, there are still obstacles with respect to available data, analytical methods, and exposure and risk assessment modeling.

EPA is working on a number of areas related to risk assessments of pathogens. There are two examples of projects that are ongoing and that will be assessed as part of this broader effort. One is a conceptual framework for assessing the risks of human disease following exposure to waterborne pathogens, as described in ''Revised Framework for Microbial Risk Assessment'' (International Life Sciences Institute, 2000). The second is a quantitative microbial risk assessment (QMRA), as described in ''A Dynamic Model to Assess Microbial Health Risks Associated with Beneficial Uses of Biosolids'' (WERF, 2003).

In the first example, the International Life Sciences Institute (ILSI), in cooperation with EPA, developed a framework that provides a useful and proven tool for conducting microbial risk assessments. The framework emphasizes the dynamic and iterative nature of the risk assessment process, and that future efforts need to be directed toward the examination of methods for estimating risk and ways to improve the estimates. Areas for further evaluating the assumptions in the framework model, described in the ILSI framework, include understanding the relationship between infection and subsequent illness, impact of critical susceptibility factors such as age and immune status, secondary transmission of diseases, and heterogeneous distributions of microorganisms and the potential changes in concentration of microorganisms in the environment.

In the second example, WERF and EPA are funding Quantitative Microbial Risk Assessment (QMRA) research. In addition to WERF and EPA, other organizations involved in this research include the University of California at Berkeley and Eisenberg, Olevieri and Associates. The document describing this research also presents a methodology for assessing exposure and risks to human health from pathogens in biosolids. The present methodology provides initial screening for a given scenario, identifies broad conditions for high and low risk situations, and estimates where more data are needed. Future work (beyond 2004) may focus on applying this methodology to more refined scenarios. Such validation activities will assist EPA in ultimately developing microbial risk assessment guidelines.

EPA will inventory and assess data, methods, and tools for risk assessment on pathogens in sewage sludge (such as the two examples discussed above as well as others) to better inform research activities in sewage sludge and microbial risk assessment. In conducting this assessment, EPA will review information gathered from others doing research on this issue, some of which was described in the April 2003 draft response (68 FR 17379). This project will start with a problem formulation step to identify the key elements in assessing pathogen risks in land-applied sewage sludge. During the second phase, EPA will develop a plan to identify the available and appropriate methods and data to perform the risk assessment defined in problem formulation. An expert panel will review the material and EPA will address panel comments in the final document. This project will serve as a vehicle to better define the deficiencies in microbial risk assessment and better identify research needs for microbial risk assessment in sewage sludge matrices. The final product in FY 2005 will be a peer-reviewed plan for future analysis.

Project 9: Support Pathogen Equivalency Committee

In its April 9, 2003, notice, EPA described the work of the Pathogen Equivalency Committee (PEC), which has been operating since 1985. Public comments mentioned the PEC Committee a number of times, and there was a generally favorable opinion of the Committee. Most commenters recommended that the PEC be fully recognized and authorized by EPA to approve new part 503 processes. Supporting comments by some agreed with both the Haas report (Haas, 2001) and the NRC conclusions that the PEC has an important mission. A few comments indicated that, if the PEC were further legitimized, it should be expanded to include industry and academic experts outside of the EPA.

EPA plans additional support for the PEC, including resources to help address the increasing number and complexity of requests for guidance regarding the regulatory requirements for reducing pathogens, as well as development of alternative treatment technologies. The NRC report affirmed

the importance of the Committee's mission to regulators and the regulated community. The states and the Office of the Inspector General have also identified the Committee's work as a high priority. Public comments also reflected a desire to see the PEC adequately supported by EPA. All stressed the need for the PEC to have the resources it needs to fulfill its mission.

EPA created the PEC in 1985 to make recommendations to EPA management on applications for Processes to Significantly Reduce Pathogens (PSRP) and Processes to Further Reduce Pathogens (PFRP) equivalency under part 257 and later part 503. The PEC also provides guidance to applicants on the data necessary to determine equivalency, and to permitting authorities and members of the regulated community on issues (*e.g.*, sampling and analysis) related to meeting subpart D (pathogen and vector attraction reduction) requirements of part 503. If the PEC recommends that a process is equivalent to PSRP or PFRP, the operating parameters and any other conditions critical to adequate pathogen reduction are specified. The PEC consists of members with expertise in bacteriology, virology, parasitology, environmental engineering, medical and veterinary sciences, statistics, and sewage sludge regulations. It includes representatives from EPA's Offices of Research and Development, Office of Water, and Regional Offices, and the Centers for Disease Control and Prevention.

Project 10: Development and Application of Analytical Methods for Detecting Pharmaceutical and Personal Care Products in Sewage Sludge

The purpose of this project is to develop and apply analytical methodologies for detecting pharmaceutical and personal care products (PPCPs) in sewage sludge. The NRC Report specifically identified PPCPs as one category of diverse compounds that has not been studied in sewage sludge and that is especially likely to be present in domestic sewage sludge. The NRC report indicated that there is a need for a new hazard assessment of sewage sludge to expand the suite of chemicals evaluated.

EPA's preliminary strategy in the April 9, 2003, notice indicated that while study emphasis is being placed on pathogens to address areas of uncertainty and public interest, selected chemicals are also being addressed to help determine significant issues and identify information gaps that remain to be addressed in these areas. *See* 68 FR 17385. Chemical pollutants in pharmaceutical and personal care products are among those that EPA intends to study.

In FY 2004 through FY 2005, chemical analysis methods developed in-house previously for PPCPs (*e.g.*, antibiotics and musks) would be adapted for sewage sludge. In FY 2006, EPA may finish methods development, convert them to 40 CFR part 136 methodology, and publish methodologies. Subsequently, the methods may be applied to a limited number of real-world samples for a pilot-scale survey of PPCPs in sewage sludge.

Project 11: Publish the Proceedings of USEPA-USDA Workshop on Emerging Infectious Disease Agents and Issues Associated with Animal Manures, Biosolids, and Other Similar By-Products

As mentioned in connection with Project 3 (Methods for Microbial Pollutants), the NRC Report called for more information on the risks of disease associated with pathogens and how to analyze for them. It also called for more information on how to better disinfect sewage sludge.

In June 2001, EPA and USDA sponsored a workshop on ''Emerging Pathogen Issues in Biosolids, Animal Manures, and Other Similar By-Products'' (USEPA in press). The workshop brought together experts in sewage sludge management and animal wastes to review the state of the science, exchange ideas on how to deal with unresolved issues and suggest areas where the scientific community should focus its efforts. Participants discussed:

- Viruses, bacteria, protozoa, prions, fungi, and helminth ova;
- Migration of pathogens to groundwater and air from recycling and treatment operations;
- Qualitative identification and detection methods for pathogens; the fate of antibiotics in animal and human wastes;
- Pathogen resistance to antibiotics; and
- Susceptibility of people with immuno-suppressed conditions to pathogens.

As stated in Category E (Pathogens) of the preliminary strategy dated April 9, 2003 (68 FR 17389), EPA will make available the information produced at this workshop on pathogens in sewage sludge and animal wastes by publishing the proceedings of the workshop. The proceedings from the workshop have been peer reviewed by national and international experts, and the report will be published in early 2004.

Project 12: Support ''Sustainable Land Application Conference''

The purpose of this conference will be to address soil reactions of constituents in treated sewage sludge, manures, and other non-hazardous wastes, and to further environmentally friendly management of wastes in a sustainable manner. This January 2004 conference in Lake Buena Vista, Florida will address soil constituents (chemicals and microorganisms) reactions with constituents in treated sewage sludge, wastewater treatment plant effluents, manures, and other non-hazardous wastes. Further, this international conference is expected to have about 300 participants discussing metals, pathogens, organics, nutrients, and the interface between science and real-world applications by:

- Reviewing fundamental and specific soil reactions of non-hazardous waste constituents (nutrients, organics, metals and pathogens);
- Improving our understanding of contaminant reactions in soils, emphasizing the commonalities of soil reactions among wastes;
- Synthesizing multi-disciplinary information and characterizing the state-of-the-science for land application (''what do we know?'');
- Identifying high-priority and critical research needs (''what do we need to know?''); and
- Promoting intra- and inter-disciplinary approaches to solving problems of sustainable waste disposal and utilization.

Papers and presentations will be both invited and volunteered. All papers will be refereed and EPA will use conference findings, as appropriate, in future refinements of part 503.

Project 13: Review Criteria for Molybdenum in Land-applied Treated Sewage Sludge

One of the NRC's recommendations was that EPA should propose molybdenum standards to replace those that EPA rescinded following a legal challenge to numerical limitations promulgated in the Round One rule. Also, some commenters believe that EPA should reassess the molybdenum standard. The preliminary strategy in the April 9, 2003, notice indicated that EPA would determine the applicability of new information as the basis for re-proposing molybdenum standards for land-applied sewage sludge. *See* 68 FR 17391. This activity is included in the Agency's final action plan, as stated below.

In 2000, EPA held a workshop to update toxicity and environmental

properties for molybdenum in sewage sludge. Based on that workshop, EPA intends to assess the need and appropriate level for a numerical standard for molybdenum in sewage sludge using a summary of workshop results and conclusions (O'Connor *et al.*, 2001), supplemented with additional data developed since 2000. EPA expects to complete this assessment in 2005.

Project 14: Improve Stakeholder Involvement and Risk Communication

The NRC recommended that stakeholders should be involved in the risk assessment process and to examine biosolids management practices to ensure that the underlying risk assessment principles are effectively translated into practice. As stated in its preliminary strategy in the April 9, 2003, notice, the Agency's policy is to involve stakeholders at various stages of policy development. The Agency intends to consider how consultation with stakeholders should be included in developing future sewage sludge risk assessments. See 68 FR 17386. EPA received many comments on its preliminary strategy of April 9, 2003, urging the Agency to involve stakeholders more widely in the many aspects of the sewage sludge program.

EPA is committed to working with stakeholders who are concerned with the application or disposal of sewage sludge (the general public, State and local agencies, and private groups). In addition, the Agency will consider how it can implement the NRC's recommendations to involve stakeholders in updating and strengthening the scientific credibility of the sewage sludge regulations.

The Agency's risk communication programs are aimed at improving public awareness of the issues and achieving pollutant exposure reductions. Embodied in all of the projects is not only a need to foster public awareness of the issues surrounding sewage sludge use and exposure, but also a recognition of the advances in problem-solving that can be achieved through collaboration and cooperation.

Through the activities and organizations described in this project, EPA will participate in improving the effectiveness of risk communication methods at national, regional, and local levels. States have their own oversight programs, some of which are quite comprehensive. There is a total of about 150 full time equivalent State employees assigned to their respective biosolids programs. Five States have been authorized by EPA to administer the part 503 program, and 15 additional States are at various stages in the authorization process. National coordination of State, regional and Headquarters biosolids programs are achieved via an annual State and Regional biosolids coordinators meeting. EPA plans to continue to work closely with State and Regional biosolids coordinators and plans to support the annual workshop for sharing the latest information about biosolids management and oversight. Other organizations and activities that are designed to promote stakeholder involvement include the following:

An *Information-Sharing Group* (ISG) has been established based upon the concepts developed in WERF studies concerning joint fact-finding research. The ISG includes concerned citizens, health scientists, municipal operators, farmer representation, biosolids managers, and input from State and Federal regulatory agencies. The ISG has been established to work jointly with about 25 scientific experts in a large cooperative study of odor, particulates, pathogens, and endotoxins in the air around biosolids and animal manure land application sites. WERF has efforts underway to expand the use of such information-sharing in various research projects.

The *National Biosolids Partnership* (NBP) is an alliance formed in 1997 with the Association of Metropolitan Sewerage Agencies (AMSA), the Water Environment Federation (WEF), and EPA. The goal of the NBP is to advance environmentally sound and accepted sewage sludge management practices through partnerships with producers, service contractors, users, regulatory agencies, universities, the farming community, and environmental organizations.

The NBP is developing a voluntary *Environmental Management System* (EMS) for sewage sludge to help wastewater agencies improve their sewage sludge management programs beyond the regulatory minimums. The EMS involves environmental improvement, public involvement, and independent third party review of the facility applying for EMS status. Fifty-three wastewater agencies in the U.S. are participating in this voluntary program. Several of these municipalities are ready or will be ready for third-party audit of their EMS programs in 2004. Participating municipalities report benefits, such as more efficient operation, reduced odors in sewage sludge, less intrusive transport of the sewage sludge to land application sites, better communication, and meaningful involvement by the public.

In order for a wastewater facility to be admitted and certified to the Partnership EMS program, it must meet five requirements established by the NBP:

1. Document responsibility for the Biosolids Value Chain-pretreatment, treatment, and all biosolids management practices;
2. Commit to 10 principles in the NBP's Code of Good Practice;
3. Meet all NBP requirements;
4. Complete a fully independent third-party audit of its EMS that has been verified by a NBP's accredited audit company; and
5. Demonstrate their commitment to continual improvements in their EMS for environmental performance, regulatory compliance, public participation, and quality biosolids management practices.

Recently, the NBP recognized the Orange County Sanitation District (OCSD) in Fountain Valley, California, as the first wastewater agency in the Nation to be admitted to the Partnership EMS for biosolids programs. The EMS certification signifies that OCSD meets the NBP's requirements for the EMS program and that it supports excellence in sewage sludge management practices, exceeds regulatory compliance obligations, and provides meaningful opportunities for public participation.

The NBP recognized the City of Los Angeles Department of Public Works as the second wastewater agency in the Nation to be admitted to the Partnership EMS for sewage sludge program. A third-party audit of the City's Biosolids EMS program led to certification on September 4, 2003. EPA continues to support the development of EMS programs for wastewater agencies and the goals of improved communication and addressing public concerns in a more timely manner.

The NBP also announced release of its 2003 *Environmental Management System for Biosolids "Self Help" Training Program* intended to help wastewater agencies that are interested in starting their own EMS. The Agency plans to continue supporting NBP activities and to work with municipalities to expand their use of EMS and other programs in biosolids management. Two NBP Web sites present relevant sewage sludge information: *http://www.biosolids.org* and *http://biosolids.policy.net/emsguide/manual/goodpractmanual.vtml.*

In conclusion, EPA believes these 14 projects and associated activities will strengthen the biosolids program by improving our ability to:

- Measure pollutants of interest;

• Determine the risks posed by contaminants identified as potentially hazardous;
• Bring various stakeholder groups together via a workshop to begin development of a national incidence tracking system to ultimately determine health effects following land application of sewage sludge;
• Better understand and characterize the odors, volatile chemicals, and bioaerosols that may be emitted from land application sites;
• Better understand the effectiveness of sewage sludge processes and management practices to control pathogens;
• Improve the Agency's inspection and compliance initiatives; and
• Improve stakeholders' involvement in EPA's sewage sludge program.

C. Other Projects

Projects that are longer term in nature are those that EPA anticipates will be initiated after 2005. Initiation of longer-term projects will depend on the outcome of the research projects listed in section B, results of research being conducted by others outside the Agency, and availability of sufficient resources.

In addition to EPA directed research and activities, there is also considerable relevant work being conducted by others outside the Agency in academia, other State and Federal agencies, and trade groups, among others, that will address issues raised by the NRC recommendations. For example, WERF's sewage sludge research projects include identifying emergent trends in pathogen detection, assessing microbial health risks, identifying and controlling odors, and better understanding the fate, effects, and bioavailability of metals and certain chemicals in sewage sludge after land application. Two WERF Web sites that address relevant sewage sludge information and research are *http://www.werf.org/Collection/biosolids_chart.cfm#table1* and *http://www.werf.org/press/winter03/default.cfm.*

One WERF project involves ''Biosolids Public Perception & Participation'' (WERF, In Press). The project team included members from the New England Biosolids and Residuals Association, the Northwest Biosolids Management Association, the Center for Environmental Communication, and BioCycle, as well as two review panels consisting of biosolids stakeholders and academics. The study concludes that positive public relationships with stakeholders starts by developing public participation and thus earning public trust. Building success with stakeholders involves two way communication with the public, not only through the use of brochures, fact sheets, television spots and radio talk shows, but also by having a complaint hotline, tours, open houses, door-to-door contact, and community advisory groups. The final report from this study should be available by the end of winter 2004.

The University of Arizona (UA), Department of Soil, Water and Environmental Science, investigates physical, chemical, and microbial processes that affect the quality of surface and subsurface waters. Some of the UA's research projects deal with sewage sludge land application and utilization (*e.g.*, agricultural land application and mine tailing stabilization), sewage sludge management (*e.g.*, pathogen reduction in solar drying beds), health protection (*e.g.*, fate and transport of pathogens within sewage sludge, fate of *Staphylococcus aureus* in sewage sludge and evaluation of odors from land-applied sewage sludge), and rapid response to emerging issues (*e.g.*, antibiotic-resistant bacteria and endotoxins in land-applied sewage sludge, endocrine-related effects, and fate and transport of SARS virus). In one recent study at the UA, scientists are studying *Staphylococcus aureus* in sewage sludge after it had been processed at full-scale treatment plants (Rusin *et al.*, 2003).

Much of the work being done outside of EPA, including the research described above, that relates directly to NRC recommendations is being used to improve the Agency's sewage sludge program. EPA plans to review and evaluate studies external to EPA to determine if they are useful for conducting risk assessments and improving the basis for the part 503 regulations or improving management practices. The Agency will review these studies in accordance with the Information Quality Guidelines (see ''Guidelines for Ensuring and Maximizing the Quality, Objectivity, Utility, and Integrity of Information Disseminated by the Environmental Protection Agency'' USEPA, 2002). These guidelines stress that information disseminated by EPA should adhere to a basic standard of quality, including objectivity, utility, and integrity.

VIII. Process To Review Part 503 Regulations Under the CWA Section 405(d)(2)(C)

As previously described, section 405(d)(2)(C) of the CWA requires that EPA review the sewage sludge regulations for the purpose of identifying additional toxic pollutants and promulgating regulations for such pollutants consistent with the requirements of section 405(d). In 1993, EPA promulgated regulations in 40 CFR part 503 setting numerical standards for certain toxic pollutants in sludge, requirements for pathogen and vector attraction reduction, and operational standards for emissions from sewage sludge incinerators.

As explained in section IV, EPA commissioned the NRC study of existing sewage sludge land application regulations to strengthen its scientific review under section 405(d)(2)(C). EPA agreed with the parties in *Gearhart* v. *Whitman* to publish a preliminary notice seeking public comment and a final notice, stating the results of its section 405(d)(2)(C) review.

In fulfilling this commitment, EPA first collected and conducted a preliminary review of publicly available information on the occurrence of chemicals in sewage sludge. This information consists of concentration data found in national and international literature sources published between 1990 and 2002 and the 1989 National Sewage Sludge Survey (NSSS); data on environmental properties such as mobility and persistence; and available human health benchmarks (HHBs). EPA compiled a list of 799 chemical pollutants for which such information was found and described this list of candidate pollutants for ongoing sewage sludge evaluation in the April 2003 **Federal Register** notice. EPA placed the full list of candidate pollutants in the docket for public review and comment (USEPA, 2003a). EPA made minor corrections to the list, which resulted in slightly revising the list from 799 candidate pollutants to 803 candidate pollutants. See Table 1 in Appendix O of the Technical Background Document (TBD) (USEPA, 2003b).

EPA then used a human health-based data evaluation and pollutant selection process to determine whether the existing data were sufficient for each of these 803 pollutants to proceed with an exposure and hazard screening assessment. This process involved identifying the pollutants for which EPA peer-reviewed final HHBs are available, and for which there are data on concentrations in U.S. sewage sludge for those pollutants with HHBs, either in the NSSS or reported in the literature.

In summary, a pollutant was selected from the list of 803 pollutants for an exposure and hazard screening assessment if it met two criteria: (1) It has measured concentrations in U.S. sewage sludge based on the literature, or it had been measured in the 1989 NSSS;

and (2) it has a HHB from one of two sources that was not undergoing reevaluation as of October 1, 2003. The sources for HHBs were EPA's Integrated Risk Information System (IRIS) health assessments and EPA's Office of Pesticide Programs (OPP) Reregistration Eligibility Decisions (REDs) or Interim Reregistration Eligibility Decisions (IREDs). Figure 1 depicts the steps involved in this process.

BILLING CODE 6560–50–P

Figure 1. Human Health-Based Pollutant Selection Process

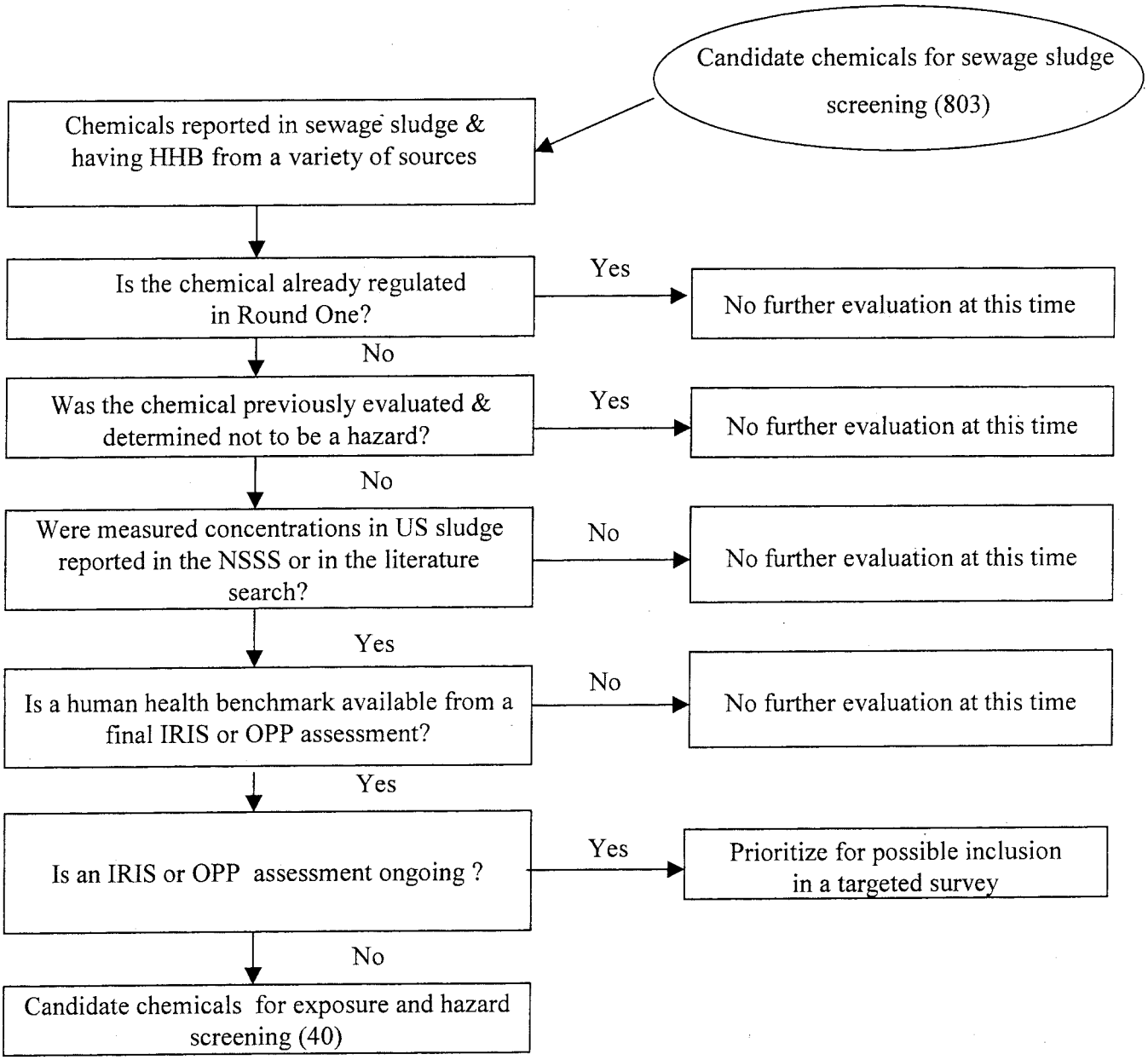

BILLING CODE 6560–50–C

Applying this process resulted in a list of 40 pollutants that merited exposure and hazard screening. These 40 pollutants are listed in Table 1.

TABLE 1.—CANDIDATE POLLUTANTS FOR EXPOSURE AND HAZARD SCREENING

Chemical	CASRN
Acetone	67–64–1
Acetophenone	98–86–2
Anthracene	120–12–7
Azinphos methyl	86–50–0
Barium	7440–39–3
Benzoic acid	65–85–0

TABLE 1.—CANDIDATE POLLUTANTS FOR EXPOSURE AND HAZARD SCREENING—Continued

Chemical	CASRN
Beryllium	7440–41–7
Biphenyl, 1,1-	92–52–4
Butyl benzyl phthalate	85–68–7
Carbon disulfide	75–15–0
Chloroaniline, 4-	106–47–8
Chlorobenzene; Phenyl chloride	108–90–7

TABLE 1.—CANDIDATE POLLUTANTS FOR EXPOSURE AND HAZARD SCREENING—Continued

Chemical	CASRN
Chlorobenzilate	510–15–6
Chlorpyrifos	2921–88–2
Cresol, o-; 2-Methylphenol	95–48–7
Diazinon	333–41–5
Dichloroethene, 1,2-trans-	156–60–5
Dichloromethane; Methylene chloride	75–09–2
Dioxane, 1,4-	123–91–1
Endrin	72–20–8
Ethyl p-nitrophenyl phenylphosphorothioate; EPN; Santox	2104–64–5
Fluoranthene	206–44–0
Hexachlorocyclohexane, alpha-	319–84–6
Hexachlorocyclohexane, beta-	319–85–7
Isobutyl alcohol	78–83–1
Manganese	7439–96–5
Methyl ethyl ketone	78–93–3
Methyl isobutyl ketone (MIBK); Methyl-2-pentanone, 4-	108–10–1
Naled	300–76–5
Nitrate	14797–55–8
Nitrite	14797–65–0
N-Nitrosodiphenylamine	86–30–6
Phenol	108–95–2
Pyrene	129–00–0
Silver	7440–22–4
Trichlorofluoromethane	75–69–4
Trichlorophenoxy propionic acid, 2-2,4,5-; Silvex	93–72–1
Trichlorophenoxyacetic acid, 2,4,5-; 2,4,5-T	93–76–5
Trifluralin	1582–09–8
Xylenes (mixture)	1330–20–7

Data collection and evaluation, along with the results for determining sufficiency of data to proceed with an exposure and hazard screening assessment for a pollutant, are available in detail in appendix O of the TBD (USEPA, 2003b).

As described by Figure 1, EPA did not include pollutants for which the scientific basis for the HHBs is currently being reassessed. This applied to certain chemicals with HHBs in IRIS or OPP's IREDs and REDs. EPA has not included these chemicals in the list of chemicals to consider for exposure and hazard screening assessment at this time because these HHBs are critical to determining whether, and at what level, pollutants might be of potential hazard in sewage sludge. Because, under section 405(d)(2)(C), EPA is required to review the sewage sludge regulations for identification of additional toxic pollutants every two years, EPA has deferred chemicals with ongoing health assessments for a future review when the assessment is complete. EPA believes that the HHB reassessments will provide valuable information relevant to possible further regulation of sewage sludge once they are complete and that it would be premature to include these pollutants in a hazard screening process at this time.

At the same time, EPA recognizes that some of the chemical pollutants which are undergoing HHB reevaluation may be of concern in sewage sludge, and that it may be prudent to include such pollutants in the planned targeted survey (*i.e.*, section VII.B, Project 5) so that concentration values in sewage sludge may be obtained and used in future section 405(d)(2)(C) reviews. Therefore, EPA used a simple estimate of potential hazard to prioritize chemicals with ongoing health assessments for possible inclusion in the targeted survey.

The simple estimate involved calculating a theoretical hazard quotient (THQ) for each of the 20 chemicals with ongoing IRIS or OPP health assessments using existing oral human health benchmarks. The THQ is the ratio of the theoretical average daily intake (TADI), for a 1–3 year old child, one of the most highly exposed population groups on a kg body weight basis, to the oral critical dose (OCD), where the OCD (in milligrams/kilograms/day, or mg/kg/day) is the lowest of the reference dose, population adjusted dose, or dose for 10^{-5} cancer risk.[1] On this basis, a prioritization scale was established for the 20 chemicals with ongoing IRIS or OPP health assessments, which have existing oral human health benchmarks. Using this priority scale and results of the exposure screening assessment, EPA decided which chemicals to consider high priority for potential health concern and, subject to the availability of adequate budgetary resources, to include in the targeted survey to be initiated in FY 2005. These are benzo[a]pyrene, PCB congeners and Aroclors (excluding coplanar PCB congeners already included in the 2001 dioxins survey), di(2-ethylhexyl) phthalate, thallium, antimony, carbon tetrachloride and fluoride. This prioritization strategy is further described in appendix O of the Technical Background Document (USEPA, 2003b). These pollutants are not being identified at this time for purposes of further regulatory consideration as part of EPA's current review under section 405(d)(2)(C).

As mentioned above, the 40 pollutants listed as a result of the selection process depicted in Figure 1 were next analyzed through an exposure and hazard screening process. The principal objective was to evaluate whether the Agency should consider any of these as additional toxic pollutants for regulation in sewage sludge under section 405(d) of the CWA. As discussed in section X, the screening assessment identified 15 pollutants with hazard quotient (HQ) values equal to or greater than one.

IX. Hazard-Based Screening Assessment

EPA used a probabilistic hazard assessment model with appropriately conservative assumptions to analyze the 40 pollutants identified as a result of the data evaluation and pollutant selection process. This section describes the data and analyses EPA used in this screen for the 40 pollutants listed in Table 1. The two major questions addressed in this assessment were:

- Which environmental pathways are of concern?
- What is the potential hazard associated with each pollutant?

The Technical Background Document (TBD) (USEPA, 2003b) contains the rationale behind the relationships addressed and the methods, data gaps, and uncertainties associated with the data and models. The TBD also contains details about properties of sewage sludge, regional climate, soil characteristics, farm size, exposure routes and pathways, toxicity values, source models and other modeling parameters and assumptions related to the screening assessment.

A. Sewage Sludge Management Practices Modeled

The exposure and hazard screening assessment evaluated the 40 chemicals for three sewage sludge management practices:

- Disposal in sewage sludge lagoons (surface disposal units),
- Application of sewage sludge to pastureland and cropland, and
- Sewage sludge fired in a sewage sludge incinerator.

Below is a summary description of the screening scenarios and key assumptions for the three sewage sludge management practices.

1. Sewage Sludge Lagoon Scenario

The lagoon scenario was the surface disposal unit chosen for the model

[1] The NRC recommended that EPA evaluate risks based on ''reasonable maximum exposure'' (RME). Therefore, in the hazard screening assessment, EPA uses a risk level of 1E–5 to calculate the RME to a subpopulation of highly exposed individuals, rather than a 1E–6 risk level to calculate risk to the general population. A risk level of 1E–5 is consistent with setting such a risk level for, and being protective of, the RME in the sewage sludge regulations. Members of the subpopulation defined as subject to RME are farm families assumed to live on a farm and consume farm-raised foods where land-applied sewage sludge is used as fertilizer or a soil amendment and, therefore, are more highly exposed to sewage sludge than the general population.

because sewage sludge disposed in such an impoundment is likely to have the greatest potential to cause groundwater contamination of the various surface disposal configurations. For the sewage sludge lagoon scenario, EPA assumed that sewage sludge is managed in a lagoon or surface impoundment that holds the sludge for disposal. For this hazard assessment, the lagoon modeled was a non-aerated surface impoundment. Exposure to pollutants via sewage sludge in lagoons occurs through the drinking water and ambient air. We assumed that no food chain exposures occur from sewage sludge in this surface lagoon scenario because EPA has no data indicating that food is grown or raised in close proximity to surface disposal units. The surface impoundment was assumed to operate for 50 years (*i.e.*, sewage sludge is surface-disposed in the lagoon over that time period) after which it was closed. Surface impoundments were modeled based on a nationally representative sample of non-aerated, non-hazardous waste surface impoundments. See appendix A of the TBD (USEPA, 2003b).

It was assumed that these impoundments are located in a rural industrial setting where residents live within a distribution of distances relatively close to the lagoon, where they might be exposed to ambient air contaminated by sludge pollutants and where they might ingest drinking water from residential groundwater wells. These modeled residents also use their residential wells as a source of drinking water and for other household uses, such as showering. More details of the sewage sludge lagoon screening assessment are available in the TBD (USEPA 2003b).

2. Land Application Scenario

For the agricultural land application scenario, EPA assumed that sewage sludge is applied to both pastureland and cropland that are used to raise food for human consumption. The farmer was assumed to apply sewage sludge to pastureland and cropland at the appropriate agronomic rates. For this exposure and hazard screening assessment, the following assumptions were used to reflect a distribution of typical agricultural practices common throughout the United States:

- Sewage sludge is applied at a rate of 5 to 10 metric tons per hectare per application (uniform distribution).
- Applications occur once every 2 years.
- Applications are limited to a maximum of 40 years (20 applications).
- Cropland is tilled to a depth of 20 cm at application and at two additional times during the year.
- Pastureland is not tilled, but the sludge is assumed incorporated to a depth of 2 cm by bioturbidation.

Application to both row crops and pasture includes runoff into two water-bodies types. The first is an ''index reservoir'' using the Shipman City Lake in Shipman, Indiana as a model for drinking water exposures. This reservoir covers 13 acres, is 9 ft deep, and has a watershed area of 427 acres. The ratio of drainage area to capacity (volume of water in the lake) is approximately 12 for the index reservoir in this assessment. These areas remain constant in this assessment, and the same index reservoir was assumed to occur in each of the 41 climate regions. Also, in the screening assessment, it was assumed that the 427-acre watershed area contains other farms that also apply sewage sludge occupying 10 to 80 percent of the watershed in aggregate (in addition to the modeled farm).

The second water-body type is a farm pond and was used to evaluate ecological exposure, and human exposure from fish consumption. It was assumed that the pond had the farm area as its total drainage basin and to have a drainage area to capacity ratio of five. The farm pond depth is assumed to be constant at 9 feet. The area of the pond is proportional to the area of the farm. EPA also assumed that there is no buffer between the amended agricultural land and the farm pond; thus, EPA assumes that the erosion and runoff from the agricultural land go directly to the farm pond. Additional details of the screening assessment for the land application scenario are available in the TBD (USEPA 2003b).

3. Sewage Sludge Incinerator Scenario

For the sewage sludge incinerator scenario, EPA assumed that the modeled receptor resides and inhales ambient air in the shadow of a sewage sludge incinerator's emissions plume. To estimate maximum exposure to ground-level concentrations of pollutants to which the modeled individual would be exposed, we used the following parameters in exposure modeling:

- Sewage sludge feed rate (SF) in the units of dry metric tons of sewage sludge fed into the incinerator per second.
- An emission factor (EF) in the units of grams of pollutant emitted at the incinerator stack per dry metric ton of sewage sludge fed into the incinerator.
- A dispersion factor (DF) obtained by air modeling in the units of micrograms of pollutant per cubic meter of ambient air at ground level per grams of pollutant emitted at the incinerator stack per second.

Multiplication of these three factors together yields an estimated maximum ground level concentration of a pollutant in units of micrograms of pollutant per cubic meter of ambient air. Additional details of the screening assessment for the incinerator scenario are available in the incineration pathway analysis (USEPA 2003c).

B. Receptors

The exposure pathways by which humans and ecological species (*i.e.*, those humans and wildlife that are exposed to components in sewage sludge) for the three sewage sludge management practices are described in the TBD, section 1.7. In summary, families living near sewage sludge incinerators and sewage sludge lagoons, as well as farm families consuming food produced on sewage sludge-amended soil, were considered the affected populations in this exposure screening assessment. Ecological receptors were assessed for exposure to contaminated habitat, food and feed following agricultural land application of sewage sludge.

For the agricultural land application scenario, human members of the subpopulation defined as subject to reasonable maximum exposure (RME) are members of a farm family assumed to live on a farm and consume farm-raised foods where land-applied sewage sludge is used as fertilizer or a soil amendment. These individuals are more highly exposed to sewage sludge than the general population. Much of the information for the RME for the agricultural land application scenario comes from the EPA Exposure Factors Handbook, a peer-reviewed source of data for use in risk assessments (USEPA, 1997). A higher percentage of the farm family's diet consists of food grown on sewage sludge-amended soil. EPA assumed that adults and children on the farm consume fish caught from a nearby waterbody (a pond) and that the farm family also raised a significant portion of its fruit and vegetable diet on sewage sludge amended soils. In addition, the farm family is exposed through drinking water or showering in either untreated surface water from an index reservoir or groundwater from a residential well.

For the incineration scenario, EPA defined RME as exposure to a rural family living in proximity to a sewage sludge incinerator. These individuals were assumed to be exposed by direct inhalation of emissions from a sewage sludge incinerator.

For the surface disposal scenario, EPA defined RME as exposure to a rural family living near a sewage sludge lagoon. EPA assumed these individuals are exposed to constituents of sewage sludge through ingestion of groundwater from a nearby residential well and by inhalation from showering.

Affected wildlife included invertebrate and vertebrate animals that may be exposed to contaminants through land application of sewage sludge. It was assumed that the ecological receptors, both aquatic and terrestrial, are exposed in the crop and pasture and in and around a farm pond. The representative terrestrial and aquatic wildlife species were selected based on their living, feeding, and foraging habitat. We included animals that derive a significant portion of their diet from a farm, as well as those that live in or feed in and around farm ponds.

The Agency did not assess exposure pathways for wildlife in the sewage sludge lagoon scenario (as a surface disposal unit) or the incineration scenario, only the land application scenario. EPA estimates that less than one percent of the sewage sludge produced annually in the United States is disposed of in surface disposal units and approximately 17 percent is disposed of by combustion in sewage sludge incinerators. Thus, these disposal methods involve a relatively small proportion of total sewage sludge produced compared to land application of sewage sludge. In addition, surface disposal sites generally are areas with poor ecological habitat. Most of the sewage sludge produced in the U.S. goes to land application to fertilize crop or as a soil amendment. Therefore, the Agency did not assess aquatic and terrestrial wildlife exposure associated with surface disposal or incineration for this screen. We deem the land application scenario, which includes the treated agricultural crop and pasture land and farm pond, to be more representative of wildlife habitat, and thus, where ecological exposures are most likely to happen. Therefore, EPA believes that the agricultural land application scenario is a good indicator of ecological hazard.

C. Exposure Assessment Modeling

Human exposures may occur as a result of sewage sludge disposal in a lagoon or incinerator, or as the result of application of sewage sludge to agricultural land. The human exposure pathways modeled for the sewage sludge lagoon scenario are presented in Table 2. It was assumed that a resident family lives near a facility with a sewage sludge lagoon and breathes the ambient air at that location. It was also assumed that the family has a residential well that supplies tap water to the household for drinking water and showering. Ambient air exposures and the inhalation of contaminants during showering were estimated by the average daily air concentrations of vapors to which an individual might be exposed. Exposure via drinking water was estimated by multiplying the modeled concentrations of the pollutants in groundwater by the drinking water consumption rate of the individual.

TABLE 2.—HUMAN EXPOSURE PATHWAYS FOR THE SEWAGE SLUDGE LAGOON SCENARIO

Receptor	Inhalation of ambient air	Inhalation of shower air (groundwater source)	Ingestion of drinking water (groundwater source)
Adult Resident	x	x	x
Child Resident	x	x	x

In the agricultural land application scenario, more exposure routes are considered in the assessment. The exposure pathways considered for the farm family are presented in the Table 3.

TABLE 3.—HUMAN EXPOSURE PATHWAYS FOR THE AGRICULTURAL LAND APPLICATION SCENARIO

Receptor	Inhalation of ambient air	Inhalation of shower indoor air (groundwater or surface water)	Ingestion of drinking water (groundwater or index reservoir)	Ingestion of soil	Ingestion of produce	Ingestion of beef and dairy products	Ingestion of fish (farm pond)
Adult Farmer	x	x	x	x	x	x	x
Child Farm Resident	x	x	x	x	x	x	x

Although all of the ingestion pathways (ingestion of food and water) were aggregated in the exposure model to estimate total ingestion hazards to humans in this screening assessment, EPA did not aggregate the ingestion and inhalation pathways. The Agency aggregates oral and inhalation pathways under certain circumstances (*e.g.*, as required by the Food Quality Protection Act, OPP adds together the ingestion and inhalation pathways for pesticides that have similar toxicological endpoints for both pathways). For purposes of this screening assessment, a pathway providing exposure approximately three orders of magnitude lower than the predominating pathway (*i.e.*, ingestion, and in particular ingestion of drinking water) need not be aggregated. In this screening assessment for sewage sludge, exposure to humans via inhalation for the pollutants that have reference concentration (RfC) values is negligible, as shown by the results of the TBD. The inhalation HQs are several orders of magnitude lower than ingestion HQs; thus, aggregating these two pathways would not add meaningful results.[2]

For the ecological screening assessment, exposure concentrations were calculated for both direct contact and ingestion pathways. The exposure pathways assessed include direct contact with treated sewage sludge applied to agricultural land and indirect exposure through ingestion of contaminated food and soil or ingestion of, or contact with, surface water that

[2] There were no ingestion pathways considered for the sewage sludge incineration scenario.

receives runoff from a sewage sludge-amended field. Table 4 shows the affected wildlife and exposure pathways in the ecological screening assessment. It was assumed that exposure concentrations in sediment and soil were the maximum annual average modeled concentrations. For exposure through surface water contact, exposure concentrations were calculated to match benchmark exposure durations. For example, if the benchmark for aquatic organisms was derived from a toxicological study in which fish were exposed to the contaminant for 96 hours, then the 4-day (96-hour) maximum modeled concentration was selected as the exposure concentration. For chronic benchmarks intended to reflect long-term or lifetime exposure, the maximum annual concentration was used in the assessment.

TABLE 4.—EXPOSURE PATHWAYS FOR WILDLIFE SPECIES

Receptor	Direct contact	Direct contact medium	Ingestion
Fish	x	Surface water (farm pond)	
Aquatic Invertebrates	x	Surface water (farm pond)	
Aquatic Plants	x	Surface water (farm pond)	
Amphibians	x	Surface water (farm pond)	
Aquatic Community	x	Surface water (farm pond)	
Sediment Biota	x	Sediment (farm pond)	
Soil Invertebrates	x	Soil (agricultural field)	
Mammals			x
Birds			x

The exposure dose of the ingestion pathway for terrestrial and aquatic species was calculated as a function of the combination of concentrations in each receptor's diet items and receptor-specific ingestion rates, body weight, and bioconcentration factors. The dietary compositions were based on species-specific data on foraging and feeding behavior and reflected a year-round adult diet. Diet items were grouped by category, including different types of vegetation (*e.g.*, fruits, forage, grain, roots) and several types of prey (*e.g.*, small birds, small mammals, invertebrates, fish).

Each species' diet was modeled using the midpoint of dietary percentages for each diet item, beginning with the item with highest midpoint value and proceeding through the diet items until a full diet (100 percent) was accumulated. In this example, a robin's diet would consist of 50.5 percent soil invertebrates and 49.5 percent fruits.

The species-specific exposure factors (ingestion rates and body weights) were taken from EPA's Wildlife Exposure Factors Handbook (USEPA, 1993) and are presented in the Technical Background Document (USEPA, 2003b).

D. Screening Criteria Development

1. Human Health Benchmarks

As indicated in the data collection and evaluation steps, we used in the screening assessment human toxicity values (or HHBs) that are available in EPA's IRIS, RED, or IRED. These toxicity values include chronic reference doses (RfDs), chronic population adjusted doses, inhalation reference concentrations (RfCs), oral cancer slope factors, air unit risk factors, and oral doses and air concentrations at specified cancer risk levels. The HHBs used in this assessment are critical doses for ingestion pathways or critical concentrations used as an air pathway criterion. For air exposures to pollutants, the critical concentration is the lower value of the RfC or concentrations in air associated with an excess cancer risk of E–5 (1 in 100,000), based on the air unit risk factor. For ingestion, the critical dose is the lower of the RfD, population adjusted dose, or dose for an excess cancer risk of E–5, based on oral cancer slope factor over a lifetime.

2. Ecological Benchmarks

The benchmarks used for ecological hazard assessment are effects or toxicity values expressed in terms of media concentration (*e.g.*, mg/l for surface water or mg/kg for soil) for the direct contact pathway and in terms of dose (mg/kg-d) for the ingestion pathway. Because there is no single repository for EPA-approved ecological benchmarks analogous to EPA's IRIS or OPP RED and IRED documents, ecological benchmarks from EPA, other government reports, and from toxicological studies in the published literature were considered for the ecological screening assessment. General criteria for selecting ecological benchmarks, as well as a hierarchy of data sources, used in the screening assessment are included in Appendix P of the TBD (USEPA 2003b).

The ecological hazard screening assessment addresses the potential for adverse effects to terrestrial and aquatic wildlife, which EPA believes are the receptors which are anticipated to experience the highest exposure to pollutants in sewage sludge. The potential for pollutants to bioaccumulate in wildlife receptors is specifically addressed through the assessment of the ingestion pathway. The assessment includes receptors exposed through ingestion of both aquatic and terrestrial food items and thus addresses the potential for bioaccumulation of pollutants from soil, surface water, and sediment.

3. Hazard Characterization

The potential hazard to human and ecological receptors is expressed in terms of hazard quotients (HQs). An HQ equal to or greater than one indicates a potential for adverse effects to occur and the need to conduct a more detailed or refined risk assessment and risk characterization. For chemicals with a human health benchmark (HHB) for ingestion, the results of the screening assessment are a ratio of the estimated average daily dose or lifetime average daily dose to a critical dose for each pollutant. For chemicals with an HHB for inhalation, the average daily air concentration is compared with the critical concentration for these pollutants. If either of these ratios exceeds one at the 95th exposure percentile, the pollutant fails the screen.

A similar comparison is performed for ecological benchmarks. If the HQs equal or exceed one for any pollutant, that pollutant also fails the screen. For the direct exposure pathway, HQs are calculated as the ratio of the exposure concentration to the relevant toxicity value. For example, we calculate the HQ for fish as the ratio of the surface water concentration to the fish 96-hour toxicity value. For the ingestion pathway, HQs are the ratio of the exposure dose to the relevant

benchmark. The screening assessment was neither designed nor intended to provide definitive risk estimates. The assessments simply indicate the potential for adverse ecological effects to a variety of wildlife and provide information on the ongoing assessment of ecological risks associated with the agricultural application of sewage sludge. Additional details concerning the screening assessment are presented in sections 2 and 3 of the TBD.

X. Results of the Review of the Part 503 Regulations Under CWA Section 405(d)(2)(C)

Of the 40 pollutants for which EPA conducted its exposure and hazard screening assessment, 15 have hazard quotients (HQs) [3] that either exceed one for human receptors, or equal or exceed one for ecological receptors. We considered these 15 pollutants to have failed the screen, and, therefore, constitute the final results of EPA's current review under section 405(d)(2)(C) of the CWA. The details of screening results for all pollutants in this screening analysis are found in the TBD (USEPA, 2003b).

The results of the human and ecological exposure and hazard assessments contained in this section are intended to identify those pollutants that warrant further consideration for rulemaking. These results also indicate which exposure pathway or pathways should be the focus of further consideration with respect to these pollutants.

EPA expects to complete a more refined risk assessment and characterization for these 15 pollutants for purposes of determining whether, and if so for which, of these 15 pollutants EPA will propose rule amendments under section 405(d). Upon completion of additional assessments, if indicated, EPA will initiate a proposed rulemaking under section 405(d). Any proposed regulations may take the form of numerical limits, best management practices, or other controls and limitations needed to protect the environment and human health. The results of EPA's review described in today's notice (*i.e.*, the identified 15 pollutants) do not mean that EPA has concluded that these pollutants in sewage sludge adversely affect human health or the environment. Some, or perhaps even all, of these pollutants may not be present in concentrations that warrant regulation; or a refined risk assessment may indicate that there is insufficient risk to human health or the environment to warrant regulation. The results of EPA's review mean that EPA will obtain updated concentration data for these pollutants and will conduct a refined risk assessment using the new concentration data to determine whether to propose amendments to part 503 in order to regulate any of these pollutants under section 405(d) of the CWA.

A. Results of Human Health Screening Assessment

EPA performed a human health exposure and hazard screening assessment using both cancer and non-cancer endpoints. None of the chemicals with cancer end-points had HQs equal to or greater than one, or were considered to have failed the screen, for either the land application, surface disposal, or incineration scenarios. Also, no pollutant with a non-cancer endpoint failed the screen on the basis of inhalation exposure, either from incineration or indirectly from land application or surface disposal. Thus, EPA has identified no additional pollutants to consider for rulemaking for sewage sludge that is disposed of by incineration in a sewage sludge incinerator. However, as explained below, some pollutants failed the screen for non-cancer risks when screened for the land application and surface disposal scenarios. Table 5 presents the results for the pollutants that had HQs greater than one for the agricultural land application scenario, and Table 6 presents the results for the pollutants that had HQs greater than one for the sewage sludge lagoon scenario. Values are presented for pollutants at the 95th percentile exposure scenario of the HQ distribution.

TABLE 5.—HUMAN HAZARD QUOTIENT VALUES GREATER THAN ONE BY PATHWAY FOR THE AGRICULTURAL LAND APPLICATION SCENARIO AT THE 95TH PERCENTILE OF THE HQ DISTRIBUTION

CASRN	Chemical	Pathway receptor	HQ
14797–65–0	Nitrite	Ingestion of Surface Water: Child	1.1
		Total Ingestion: Child	1.3
7440–22–4	Silver	Ingestion of Milk:	
		Adult	3.8
		Child	12.0
		Total Ingestion:	
		Adult	4.0
		Child	12.3

TABLE 6.—HUMAN HAZARD QUOTIENT VALUES GREATER THAN ONE BY PATHWAY FOR THE SEWAGE SLUDGE LAGOON SCENARIO AT THE 95TH PERCENTILE OF THE HQ DISTRIBUTION

CASRN	Chemical	Pathway receptor	HQ
7440–39–3	Barium	Drinking Water from Groundwater:	
		Adult	1.5
		Child	3.5
106–47–8	4-Chloroaniline	Drinking Water from Groundwater:	
		Adult	2.7
		Child	6.4
7439–96–5	Manganese	Drinking Water from Groundwater:	
		Adult	32
		Child	76

[3] Exposure at or below the HHB values are considered protective of human health. Hence, the HQ values greater than one are considered to have failed the human health screen. Exposure at or above the ecological benchmarks or values are considered to exceed a level considered to be protective of wildlife species and the environment. Hence, the HQ values equal to or greater than one are considered to have failed the ecological screen.

TABLE 6.—HUMAN HAZARD QUOTIENT VALUES GREATER THAN ONE BY PATHWAY FOR THE SEWAGE SLUDGE LAGOON SCENARIO AT THE 95TH PERCENTILE OF THE HQ DISTRIBUTION—Continued

CASRN	Chemical	Pathway receptor	HQ
14797–55–8	Nitrate	Drinking Water from Groundwater:	
		.	
		Adult	9.2
		Child	23
14797–65–0	Nitrite	Drinking Water from Groundwater:	
		Adult	14
		Child	34

Nitrite had HQs greater than one in both the agricultural land application and sewage sludge lagoon scenarios. Silver had HQs greater than one for the agricultural land application only. Barium, manganese, and nitrate had HQs greater than one for the sewage sludge lagoon scenario only. The only organic chemical that had an HQ greater than one was 4-chloroaniline, also in the sewage sludge lagoon scenario. Complete human health screening assessment results are available in appendix Q of the TBD (USEPA, 2003b).

B. Results of Ecological Screening Assessment

The ecological screen was performed by either comparing environmental concentrations to which the ecological species are exposed to comparable ambient media benchmarks for direct contact (surface water, sediment, or soil) or by comparing exposure via ingestion (food, forage, water, and incidental ingestion of soil or sediment) to comparable ingestion benchmarks. The ecological screening was performed only for the agricultural scenario, since this was considered the higher exposure scenario. Table 7 shows the pollutants that had HQs equal to or greater than one for terrestrial wildlife via the direct contact pathways. There are no ingestion hazards for any aquatic or terrestrial wildlife species from any of the chemicals, based on the results presented in the TBD. Because there are many wildlife receptors, EPA grouped the receptors and listed only the highest HQ for each receptor group in Table 7. See appendix R of the TBD for a complete listing of HQs for each receptor group.

TABLE 7.—HAZARD QUOTIENT VALUES EQUAL TO OR GREATER THAN ONE FOR AQUATIC AND TERRESTRIAL WILDLIFE VIA DIRECT CONTACT PATHWAYS FOR THE 95TH PERCENTILE OF THE HQ DISTRIBUTION

CASRN	Chemical	Receptor [1]	HQ
67–64–1	Acetone	Sediment Biota	356.2
120–12–7	Anthracene	Sediment Biota	2.9
7440–39–3	Barium	Aquatic Community	235.7
7440–41–7	Beryllium	Aquatic Community	7.8
75–15–0	Carbon disulfide	Sediment Biota	1.9
106–47–8	4-Chloroaniline	Aquatic Invertebrates	1.3
333–41–5	Diazinon	Sediment Biota	1.1
206–44–0	Fluoranthene	Aquatic Community	10.7
		Sediment Biota	4.2
7439–96–5	Manganese	Aquatic Community	13.9
78–93–3	Methyl Ethyl Ketone	Sediment Biota	5.8
108–95–2	Phenol	Sediment Biota	102.4
129–00–0	Pyrene	Aquatic Community	41.9
		Sediment Biota	21.1
		Soil Biota	4.5
7440–22–4	Silver	Aquatic Community	246.6
		Aquatic Invertebrates	28.2
		Fish	4.8

[1] Sediment biota organisms include sediment invertebrates; aquatic community organisms include fish, aquatic invertebrates, aquatic plants, and amphibians; soil biota organisms include soil invertebrates.

Values presented in Table 7 are at the 95th exposure percentile of the HQ distribution for direct contact. The screening showed that thirteen pollutants had HQs greater than one via direct contact with surface water, sediment, or soil. These consisted of four metals and nine organic pollutants. These results indicate that a more refined risk assessment and risk characterization are warranted. Full results for all pollutants and receptors assessed are presented in appendix R of the TBD (EPA, 2003b).

C. Summary

The results of the hazard screening assessment contained in this section identify those pollutants which EPA is considering for rulemaking under section 405(d). These results also indicate which exposure pathway or pathways should be the focus of further consideration with respect to these pollutants. EPA has identified 15 pollutants in its review under section 405(d)(2)(C). The results of EPA's review do not mean that EPA has concluded that these pollutants in sewage sludge adversely affect human health or the environment. The magnitude of the hazard indices discussed previously do not indicate the absolute risk for a pollutant/pathway. The results of EPA's review mean that EPA will obtain updated concentration data and conduct a refined risk assessment using the data to determine whether to propose amendments to part

503 in order to regulate any of these pollutants under section 405(d) of the CWA.

In summary, of the 40 pollutants evaluated in the screen, 15 pollutants have HQs that either exceed one for human health or are equal to or greater than one for wildlife species (*see* Tables 5 through 8), as summarized in Table 8:

TABLE 8.—SUMMARY TABLE OF THE 15 POLLUTANTS WITH HQS THAT EITHER EXCEED ONE FOR HUMAN HEALTH OR ARE EQUAL TO OR GREATER THAN ONE FOR ECOLOGICAL RECEPTORS

Chemical	Receptor	Sewage sludge scenario		
		Agricultural land application	Surface disposal	Incinerator [1]
Acetone	Sediment biota	x		
Anthracene	Sediment biota	x		
Barium	Aquatic community	x		
	Adult		x	
	Child		x	
Beryllium	Aquatic community	x		
Carbon disulfide	Sediment biota	x		
4-Chloroaniline	Aquatic invertebrates	x		
	Adult		x	
	Child		x	
Diazinon	Sediment biota	x		
Fluoranthene	Aquatic community	x		
	Sediment biota	x		
Manganese	Aquatic community	x		
	Adult		x	
	Child		x	
Methyl ethyl ketone	Sediment biota	x		
Nitrate	Adult		x	
	Child		x	
Nitrite	Adult		x	
	Child	x	x	
Phenol	Sediment biota	x		
Pyrene	Aquatic community	x		
	Sediment biota	x		
	Soil biota	x		
Silver	Aquatic community	x		
	Aquatic invertebrates	x		
	Fish	x		
	Adult	x		
	Child	x		

[1] No chemical with cancer or non-cancer end-points failed the screening assessment from incineration. In addition, no chemical with cancer end-points failed the screening assessment by either the land application or the surface disposal scenarios.

EPA will design and conduct a targeted national survey of pollutants in sewage sludge in 2005 through 2007. The results of the survey will provide pollutant concentration values that EPA will then use in a more refined risk assessment and risk characterization. Based on the results of these refined analyses, EPA will propose as soon as practicable new regulations under section 405(d) for any pollutants which it determines may be present in sewage sludge in concentrations which may adversely affect public health or the environment.

XI. References

Cornell Waste Management Institute. 2003. *Clustering of Biosolid Land-Application Reported Health Incidents by Locality. http://cwmi.css.cornell.edu/sludge/incidents.htm* (Revised November 8, 2003).

Haas, C.N. 2001. *Assessment of the PEC Process.* Drexel University. January 2, 2001.

Harrison, E.Z. and S.R. Oakes. 2002. *Investigation of Alleged Health Incidents Associated with Land Application of Sewage Sludges.* New Solutions, Vol. 12 (4): 387–408 (2002).

International Life Sciences Institute. 2000. *Revised Framework for Microbial Risk Assessment.* An ILSI Risk Science Institute Workshop Report. Washington, DC.

NRC, 2002. *Biosolids Applied to Land; Advancing Standards and Practices*, National Research Council of the National Academies. The National Academies Press. Available online at *http://search.nap.edu/books/0309084865/html.*

O'Connor, G.A., R.B. Brobst, R.L. Chaney, et al. 2001. *A modified risk assessment to establish molybdenum standards for land application of biosolids.* J. Environ. Qual. 30:1490–1507.

Rusin, P.A., S.L. Maxwell, J.P. Brooks, et al. 2003. *Evidence for the Absence of Staphylococcus aureus in Land Applied Biosolids,* Environ. Sci. Technol. 2003, Vol. 37, No. 18, 4027–4030.

USEPA, 1994. *A Plain English Guide to the EPA Part 503 Biosolids Rule.* 190 pages. Office of Water, Office of Wastewater Management. Available online at: *http://www.epa.gov/owm/mtb/biosolids/503pe/index.htm.*

USEPA, 1996. *Technical Support Document for the Round Two Sewage Sludge Pollutants.* EPA–822–R–96–003. Office of Water. Washington, DC.

USEPA, 2000. *National Water Quality Inventory Report to Congress* (section 305(b) report).

USEPA, 2002. *Guidelines for Ensuring and Maximizing the Quality, Objectivity, Utility, and Integrity of Information Disseminated by the Environmental Protection Agency.* EPA

260R–02–008. Office of Environmental Information. Washington, DC. October 2002. Available online at *http://www.epa.gov/oei/qualityguidelines.*

USEPA, 2003a. *Candidate Pollutants for Ongoing Sewage Sludge Evaluation.* 15 pages. Office of Water, Office of Science and Technology. Washington, DC. (EPA Docket for 68 FR 17379).

USEPA, 2003b. *Technical Background Document for the Sewage Sludge Exposure and Hazard Screening Assessment.* Office of Water. RTI Project No. 08317.001.024.005.

USEPA, 2003c. *Methodology and Results of the Screening Analysis for Pollutants Managed by Incineration.* Office of Air. Washington, DC.

USEPA, 2003d. *Responses to Public Comments Document.* Office of Water. Office of Science and Technology. Washington, DC.

USEPA, 2003e. *Environmental Regulations and Technology: Control of Pathogens and Vector Attraction in Sewage Sludge.* EPA/625/R–92/013–2003.

WERF, 2003. *Dynamic Model to Assess Microbial Health Risks Associated with Beneficial Uses of Biosolids.* Cooperative Agreement No. CR–825237. Alexandria, VA.

WERF, In Press. *Biosolids Public Perception & Participation.* Ned Beecher, New England Biosolids & Residuals Association, Principal Investigator. Alexandria, VA.

Dated: December 23, 2003.

G. Tracy Mehan III,

Assistant Administrator, Office of Water.

[FR Doc. 03–32217 Filed 12–30–03; 8:45 am]

BILLING CODE 6560–50–P

ENVIRONMENTAL PROTECTION AGENCY

[FRL–OW–FRL–7605–4]

Notice of Availability of Draft Aquatic Life Criteria Document for Copper and Request for Scientific Views

AGENCY: Environmental Protection Agency (EPA).

ACTION: Notice of availability and request for scientific views.

SUMMARY: This notice informs the public about the availability of a draft document containing updated aquatic life criteria for copper and requests scientific views. The Clean Water Act (CWA) requires EPA to develop and publish, and, from time to time, revise criteria for water quality that accurately reflect the latest scientific knowledge. EPA's recommended water quality criteria provide guidance for States and authorized Tribes to establish water quality standards under the CWA to protect human health and aquatic life.

DATES: EPA will accept scientific views on the draft *2003 Draft Updated of Ambient Water Quality Criteria for Copper* document on or before March 1, 2004.

ADDRESSES: Scientific views may be submitted electronically, by mail or through hand-delivery/courier. Follow the detailed instructions as provided in section I.C. of the **SUPPLEMENTARY INFORMATION** section. Electronic files may be e-mailed to: *OW-Docket@epa.gov.* Scientific views may be mailed to the Water Docket, Environmental Protection Agency, Mailecode: 4101T, 1200 Pennsylvania Avenue, NW., Washington, DC 20460, Attention Docket ID No. OW–2003–0079. Instructions for couriers and other hand delivery are provided in section I.C.3. The Agency will not accept facsimiles (faxes).

FOR FURTHER INFORMATION CONTACT: Cindy Roberts, Health and Ecological Criteria Division (4304T), U.S. EPA, Ariel Rios Building, 1200 Pennsylvania Ave., NW., Washington, DC 20460; (202) 566–1124; *roberts.cindy@epa.gov.*

SUPPLEMENTARY INFORMATION:

I. General Information

A. Interested Entities

Entities potentially interested in today's notice are those that produce, use, or regulate copper. Categories and entities interested in today's notice include.

Category	Examples of interested entities
State/Local/Tribal Government.	States, Tribes and municipalities.
Industry	Mining, fabricated metal products, electric equipment.

This table is not intended to be exhaustive, but rather provides a guide for readers regarding entities likely to be interested in this notice. This table lists the types of entities that EPA is now aware could potentially be interested in this notice. Other types of entities not listed in the table could also be interested.

B. How Can I Get Copies of This Document and Other Related Information?

1. *Docket.* EPA has established an official public docket for this notice under Docket ID No. OW–2003–0079. The official public docket consists of the documents specifically referenced in this notice, any scientific views received, and other information related to this notice. Although a part of the official docket, the public docket does not include Confidential Business Information (CBI) or other information whose disclosure is restricted by statute. The official public docket is the collection of materials that is available for public viewing at the Water Docket in the EPA Docket Center, (EPA/DC) EPA West, Room B102, 1301 Constitution Ave., NW., Washington, DC. The EPA Docket Center Public Reading Room is open from 8:30 a.m. to 4:30 p.m., Monday through Friday, excluding legal holidays. The telephone number for the Public Reading Room is (202) 566–1744, and the telephone number for the Water Docket is (202) 566–2426. To view these materials, we encourage you to call ahead to schedule an appointment. Every user is entitled to copy 266 pages per day before incurring a charge. The docket may charge 15 cents a page for each page over the 266-page limit plus an administrative fee of $25.00.

2. *Electronic Access.* You may access this **Federal Register** document electronically through the EPA Internet under the ''**Federal Register**'' listings at *http://www.epa.gov/fedrgstr/.*

An electronic version of the public docket is available through EPA's electronic public docket and comment system, EPA Dockets. You may use EPA Dockets at *http://www.epa.gov/edocket/* to submit or view the scientific views, access the index listing of the contents of the official public docket, and to access those documents in the public docket that are available electronically. Once in the system, select ''search,'' then key in the appropriate docket identification number.

Certain types of information will not be placed in the EPA Dockets. Information claimed as CBI and other information whose disclosure is restricted by statute, which is not included in the official public docket will not be available for public viewing in EPA's electronic public docket. EPA's policy is that copyrighted material will not be placed in EPA's electronic public docket, but will be available only in printed, paper form in the official public docket. To the extent feasible, publicly available docket materials will be made available in EPA's electronic public docket. When a document is selected from the index list in EPA Dockets, the system will identify whether the document is available for viewing in EPA's electronic public docket. Although not all docket materials may be available electronically, you may still access any of the publicly available

docket materials through the docket facility identified in section I.B.1.

For public commenters, it is important to note that EPA's policy is that scientific views, whether submitted electronically or in paper, will be made available for public viewing in EPA's electronic public docket as EPA receives them and without change, unless the views contain copyrighted material, CBI, or other information whose disclosure is restricted by statute. When EPA identifies a scientific view containing copyrighted material, EPA will provide a reference to that material in the version of the view that is placed in EPA's electronic public docket. The entire printed scientific view, including the copyrighted material, will be available in the public docket.

Scientific views submitted on computer disks that are mailed or delivered to the docket will be transferred to EPA's electronic public docket. Scientific views that are mailed or delivered to the Docket will be scanned and placed in EPA's electronic public docket. Where practical, physical objects will be photographed, and the photograph will be placed in EPA's electronic public docket along with a brief description written by the docket staff.

C. How and To Whom Do I Submit My Scientific Views?

You may submit scientific views electronically, by mail, or through hand delivery/courier. To ensure proper receipt by EPA, identify the appropriate docket identification number in the subject line on the first page of your views. Please ensure that your views are submitted within the specified time period. Scientific views received after the close of the stated time period will be marked ''late.'' EPA is not required to consider these late submittals. If you wish to submit CBI or information that is otherwise protected by statute, please follow the instructions in section I.B.2. Do not use EPA Dockets or e-mail to submit CBI or information protected by statute.

1. *Electronically.* If you submit electronic scientific views as prescribed below, EPA recommends that you include your name, mailing address, and an e-mail address or other contact information in the body of your scientific views. Also include this contact information on the outside of any disk or CD–ROM you submit, and in any cover letter accompanying the disk or CD–ROM. This ensures that you can be identified as the submitter of the scientific views and allows EPA to contact you in case EPA cannot read your views due to technical difficulties or needs further information on the substance of your views. EPA's policy is that EPA will not edit your scientific views, and any identifying or contact information provided in the body of a view will be included as part of the scientific views that are placed in the official public docket, and made available in EPA's electronic public docket. If EPA cannot read your views due to technical difficulties and cannot contact you for clarification, EPA may not be able to consider your views.

i. *EPA Dockets.* Your use of EPA's electronic public docket to submit scientific views to EPA electronically is EPA's preferred method for receiving scientific views. Go directly to EPA Dockets at *http://www.epa.gov/edocket* and follow the online instructions for submitting scientific views. To access EPA's electronic public docket from the EPA Internet Home Page, select ''Information Sources,'' ''Dockets,'' and ''EPA Dockets.'' Once in the system, select ''search,'' and then key in Docket ID No. OW–2003–0079. The system is an ''anonymous access'' system, which means EPA will not know your identity, e-mail address, or other contact information unless you provide it in the body of your input.

ii. *E-mail.* Scientific views may be sent by electronic mail (e-mail) to: *OW-Docket@epa.gov,* Attention Docket ID No. OW–2003–0079. In contrast to EPA's electronic public docket, EPA's e-mail system is not an ''anonymous access'' system. If you send an e-mail scientific view directly to the Docket without going through EPA's electronic public docket, EPA's e-mail system automatically captures your e-mail address. E-mail addresses that are automatically captured by EPA's e-mail system are included as part of the scientific views that are placed in the official public docket, and made available in EPA's electronic public docket.

iii. *Disk or CD–ROM.* You may submit scientific views on a disk or CD–ROM that you mail to the mailing address identified in section I.C.2. These electronic submissions will be accepted in WordPerfect, or ASCII file format. Avoid the use of special characters and any form of encryption.

2. *By Mail.* Send an original and three copies of all scientific views, enclosures, or references, to the Water Docket, Environmental Protection Agency, Mailcode MC–4101T, 1200 Pennsylvania Avenue, NW., Washington, DC 20460, Attention Docket ID No. OW–2003–0079.

3. *By Hand Delivery or Courier.* Deliver your scientific views to: EPA Docket Center, (EPA/DC) EPA West, Room B102, 1301 Constitution Ave., NW., Washington, DC, Attention Docket ID No. OW–2003–0079. Such deliveries are only accepted during the Docket's normal hours of operation as identified in section I.B.1.

D. What Should I Consider as I Prepare My Scientific Views for EPA?

You may find these suggestions helpful for preparing your scientific views:

1. Explain your scientific views as clearly as possible.
2. Describe any assumptions that you used.
3. Provide any technical information and/or data you used that support your scientific views.
4. Provide specific examples to illustrate your concerns.
5. Offer alternatives.
6. Make sure to submit your scientific views by the time period deadline identified.
7. To ensure proper receipt by EPA, identify the appropriate docket identification number in the subject line on the first page of your response. It would also be helpful if you provided the name, date, and **Federal Register** citation related to your views.

II. What Are Water Quality Criteria?

Water quality criteria are scientifically-derived concentrations of a pollutant that protect aquatic life or human health from the harmful effects of pollutants in ambient water. Section 304(a)(1) of the Clean Water Act requires EPA to develop and publish and, from time to time, revise criteria for water quality to accurately reflect the latest scientific knowledge. Water quality criteria developed under section 304(a) are based solely on data and scientific judgments on the relationship between pollutant concentrations and environmental and human health effects. Section 304(a) criteria do not consider economic impacts or the technological feasibility of meeting the chemical concentrations in ambient water. Section 304(a) criteria help States and authorized Tribes adopt water quality standards that ultimately provide a basis for controlling discharges or releases of pollutants. The criteria also help EPA promulgate federal regulations under section 303(c) when such action is necessary.

Once established, an EPA water quality criterion does not substitute for the CWA or EPA regulations; nor is it a regulation. It cannot impose legally binding requirements on the EPA, States, authorized Tribes or the regulated community. State and Tribal decision-makers have the discretion to

adopt approaches that differ from EPA's guidance on a case-by-case basis.

III. How Did EPA Involve the Public in the Criteria Update Process?

EPA solicited the public for data and information that would be useful in updating its copper criteria in the1999 **Federal Register** notice titled, *Notice of Intent To Revise Aquatic Life Criteria for Copper, Silver, Lead, Cadmium, Iron and Selenium; Notice of Intent To Develop Aquatic Life Criteria for Atrazine, Diazinon, Nonylphenol, Methyl Tertiary-Butyl Ether (MtBE), Manganese and Saltwater Dissolved Oxygen (Cape Cod to Cape Hatteras); Notice of Data Availability; Request for Data and Information* (64 FR 58409, October 29, 1999). In this notice, EPA also notified the public that it was assessing the use of the biotic ligand model for updating its copper criteria.

IV. What's New About the Updated Criteria?

The draft aquatic life criteria document, titled *2003 Draft Update of Ambient Water Quality Criteria for Copper* (EPA–822-R–03–026), contains updated freshwater and saltwater aquatic life criteria for copper. These criteria revisions are based in part on new data that have become available since EPA's last comprehensive criteria updates for copper: (*Ambient Water Quality Criteria for Copper—1985* (EPA 440/5–84–031) and *Ambient Water Quality Criteria Saltwater Copper Addendum* (April 14, 1995)). We derived both the freshwater and saltwater criteria recommendations presented in this draft document based on the principles set forth in EPA's *1985 Guidelines for Deriving Numerical National Aquatic Life Criteria for Protection of Aquatic Organisms and Their Uses.* In addition to incorporating new data, the freshwater criterion maximum concentration (CMC or ''acute criterion'') also uses the biotic ligand model (BLM) in the criteria derivation procedures. The freshwater criterion continuous concentration (CCC or ''chronic criterion'') is based on a BLM-derived acute value divided by a final acute-chronic ratio.

V. How Do BLM-Derived Criteria Differ From Hardness-Dependent Criteria?

The biotic ligand model is a metal bioavailability model based on the latest information about chemical and physiological effects of metals in aquatic environments. Earlier freshwater aquatic life criteria for copper published by the Agency were based on empirical relationships of toxicity to water hardness. That is, a relationship was established linking the criteria concentrations with water hardness. These hardness-dependent criteria, however, represented combined effects of different water quality variables (such as pH and alkalinity) correlated with hardness. Unlike the empirically derived hardness-dependent criteria, the BLM explicitly accounts for individual water quality variables and addresses variables that were not factored into the hardness relationship. Where the previous freshwater aquatic life criteria were hardness-dependent, these updated criteria are dependent on a number of water quality parameters (*e.g.*, calcium, magnesium, dissolved organic carbon) described in the document.

You can find more detailed information on the development and application of the biotic ligand model in the criteria document as well as in *Draft Biotic Ligand Model: Technical Support Document for Its Application to the Evaluation of Water Quality Criteria for Copper* (EPA 822–R–03–027) and *Integrated Approach to Assessing the Bioavailability and Toxicity of Metals* in *Surface Waters and Sediments* (EPA–822–E–99–001).

VI. What Are the Updated Criteria?

The procedures described in the *Guidelines for Deriving Numerical National Water Quality Criteria for the Protection of Aquatic Organisms and Their Uses* indicate that, except where a locally important species is very sensitive, freshwater aquatic organisms and their uses should not be affected unacceptably if:

- The 4-day average concentration of dissolved copper does not exceed the BLM-derived site-water LC50 (*i.e.*, Final Acute Value (FAV)) divided by the final acute-chronic ratio more than once every 3 years on the average (*i.e.*, the CCC) and if:
- The 24-hour average dissolved copper concentration does not exceed the BLM-derived site-LC50 (or FAV) divided by two, more than once every 3 years on the average (*i.e.*, the CMC).

The procedures described in the *Guidelines for Deriving Numerical National Water Quality Criteria for the Protection of Aquatic Organisms and Their Uses* indicate that, except where a locally important species is very sensitive, saltwater aquatic organisms and their uses should not be affected unacceptably if:

- The 4-day average concentration of dissolved copper does not exceed 1.9 ug/L more than once every 3 years on the average (*i.e.*, the CCC) and if:
- The 24-hour average dissolved copper concentration does not exceed 3.1 ug/L more than once every 3 years on the average (*i.e.*, the CMC).

VII. What Specific Questions of Science Does EPA Want Views on?

Though the public is welcome to submit scientific views on any component of the copper aquatic life criteria document, EPA is specifically interested in scientific views on the following issues of science:

- The freshwater criteria presented in this document were developed utilizing the biotic ligand model (BLM). Are the procedures used to incorporate the model apt? Is the establishment of the chronic criterion through the BLM-calculated FAV and the assigned acute-chronic-ratio (ACR) appropriate?
- Measurements were not available for all input parameters, for all studies used to derive the criteria. In some cases therefore, input parameters were estimated. A detailed description of the methods used to estimate these missing parameters is included in the updated draft copper criteria document's Appendix, *Estimation of Water Chemistry Parameters for Acute Copper Toxicity Tests.* Are the estimation procedures for the parameters appropriate or could other methods be used to improve the estimations?
- To calculate the saltwater final chronic value (FCV) the *Mytilus spp.* species mean acute value (SMAV) was divided by a final acute-chronic ratio (FACR) derived from both freshwater and saltwater species, implying that a ''5th percentile'' ACR was applicable for use in conjunction with the *M. spp.*-FAV. Submit scientific views on the appropriateness of this calculation procedure.

VIII. What Is the Relationship Between the Water Quality Criteria and Your State or Tribal Water Quality Standards?

Section 303(c)(1) requires States and authorized Tribes to review and modify, if appropriate, their water quality standards at least once every three years. Water quality standards consist of designated uses, water quality criteria to protect those uses, a policy for antidegradation, and general policies for application and implementation.

States and authorized Tribes must adopt water quality criteria that protect designated uses. Protective criteria, based on a sound scientific rationale, contain appropriate factors to protect the designated uses. Criteria may be either narrative or numeric. States and authorized Tribes have four options when adopting water quality criteria for which EPA has published section 304(a) criteria. They can:

(1) Establish numerical values based on recommended section 304(a) criteria;

(2) Adopt section 304(a) criteria, modified to reflect site-specific conditions;

(3) Adopt criteria derived using other scientifically defensible methods; or

(4) Establish narrative criteria where numeric criteria cannot be determined (40 CFR 131.11).

Consistent with 40 CFR 131.21 (*see: EPA Review and Approval of State and Tribal Water Quality Standards* (65 FR 24641, April 27, 2000)), water quality criteria that States and authorized Tribes adopted before May 30, 2000, are in effect for CWA purposes unless Federal regulations superseded them (see, for example, the *National Toxics Rule,* 40 CFR 131.36; *Water Quality Standards for Idaho,* 40 CFR 131.33). New or revised water quality criteria that States and authorized Tribes adopted into law or regulation on or after May 30, 2000, are in effect for CWA purposes only after EPA approves them.

IX. What Is the Status of Existing Recommended Criteria While They Are Being Revised?

Water quality criteria published by EPA are the Agency's recommended water quality criteria until EPA revises or withdraws the criteria. EPA supports using the current section 304(a) criteria for those chemicals for which criteria are being updated and considers them to be scientifically sound until the Agency publishes revised 304(a) criteria.

Dated: December 22, 2003.

G. Tracy Mehan III,

Assistant Administrator, Office of Water.

[FR Doc. 03–32209 Filed 12–30–03; 8:45 am]

BILLING CODE 6560–50–P

ENVIRONMENTAL PROTECTION AGENCY

[FRL–OW–FRL–7605–3]

Notice of Availability of Draft Aquatic Life Criteria Document for Diazinon and Request for Scientific Views

AGENCY: Environmental Protection Agency (EPA).

ACTION: Notice of availability and request for scientific views.

SUMMARY: This action notifies the public about the availability of a draft aquatic life criteria document for diazinon and requests scientific views. The Clean Water Act (CWA) requires the Environmental Protection Agency (EPA) to develop and publish, and from time to time revise, criteria for water accurately reflecting the latest scientific knowledge. When final, these criteria will provide EPA's recommendations to States and authorized Tribes as they establish their water quality standards as State or Tribal law or regulation. At this time the Agency is not making a final recommendation, rather the Agency is requesting scientific views on the draft document.

DATES: All significant scientific information must be submitted to the Agency on or before March 30, 2004.

ADDRESSES: Scientific views must be submitted electronically, by mail, or through hand-delivery/courier. Follow detailed instructions as provided in section C of the **SUPPLEMENTARY INFORMATION** section. Copies of the criteria document entitled, *Draft Ambient Aquatic Life Water Quality Criteria for Diazinon* (EPA–822–R–03–017) may be obtained from EPA's Water Resource Center by phone at (202) 566–2426, or by e-mail to *center.water.resource@epa.gov* or by conventional mail to: EPA Water Resource Center, 4101T, 1200 Pennsylvania Avenue NW., Washington, DC 20460. You can also download the document from EPA's Web site at *http://www.epa.gov/waterscience/criteria/diazinon/*.

FOR FURTHER INFORMATION CONTACT: Heidi Bell, Health and Ecological Criteria Division (4304), U.S. EPA, 1200 Pennsylvania Avenue NW., Washington, DC 20460; (202) 566–1089; *bell.heidi@epa.gov*.

SUPPLEMENTARY INFORMATION:

I. General Information

A. Interested Entities

Entities potentially interested in today's notice are those that produce, use, or regulate diazinon. Categories and entities interested in today's notice include:

Category	Examples of interested entities
State/Local/Tribal Government.	Texas, California, Florida.
Pesticide Producers ..	Syngenta, Makhteshim Agan.
Pesticide Users	Growers of fruit, vegetable, nut and ornamental crops.

This table is not intended to be exhaustive, but rather provides a guide for readers regarding entities likely to be interested by this notice. This table lists the types of entities that EPA is now aware could potentially be interested by this notice. Other types of entities not listed in the table could also be interested.

B. How Can I Get Copies of This Document and Other Related Information?

1. *Docket*. EPA has established an official public docket for this notice under Docket ID No. OW–2003–0062. The official public docket consists of the documents specifically referenced in this action, any scientific views received, and other information related to this notice. Although a part of the official docket, the public docket does not include Confidential Business Information (CBI) or other information whose disclosure is restricted by statute. The official public docket is the collection of materials that is available for public viewing at Water Docket in the EPA Docket Center, (EPA/DC) EPA West, Room B102, 1301 Constitution Ave., NW., Washington, DC. The EPA Docket Center Public Reading Room is open from 8:30 a.m. to 4:30 p.m., Monday through Friday, excluding legal holidays. The telephone number for the Public Reading Room is (202) 566–1744, and the telephone number for the Water Docket is (202) 566–2426. To view these documents materials, please call ahead to schedule an appointment. Every user is entitled to copy 266 pages per day before incurring a charge. The Docket may charge 15 cents a page for each page over the 266-page limit plus an administrative fee of $25.00.

2. *Electronic Access*. You may access this **Federal Register** document electronically through the EPA Internet under the ''**Federal Register**'' listings at *http://www.epa.gov/fedrgstr/*.

An electronic version of the public docket is available through EPA's electronic public docket and comment system, EPA Dockets. You may use EPA Dockets at *http://www.epa.gov/edocket/* to submit or view scientific views, access the index listing of the contents of the official public docket, and to access those documents in the public docket that are available electronically. Once in the system, select ''search,'' then key in the appropriate docket identification number.

Certain types of information will not be placed in the EPA Dockets. Information claimed as CBI and other information whose disclosure is restricted by statute, which is not included in the official public docket, will not be available for public viewing in EPA's electronic public docket. EPA's policy is that copyrighted material will not be placed in EPA's electronic public docket but will be available only in printed, paper form in the official public docket. To the extent feasible, publicly available docket materials will be made available in EPA's electronic public

docket. When a document is selected from the index list in EPA Dockets, the system will identify whether the document is available for viewing in EPA's electronic public docket. Although not all docket materials may be available electronically, you may still access any of the publicly available docket materials through the docket facility identified in section I.B.

It is important to note that EPA's policy is that scientific views, whether submitted electronically or in paper, will be made available for public viewing in EPA's electronic public docket as EPA receives them and without change, unless your views and information contain copyrighted material, CBI, or other information whose disclosure is restricted by statute. When EPA identifies a scientific view containing copyrighted material, EPA will provide a reference to that material in the version of the scientific view that is placed in EPA's electronic public docket. The entire printed scientific view, including the copyrighted material, will be available in the public docket.

Scientific views submitted on computer disks that are mailed or delivered to the docket will be transferred to EPA's electronic public docket. Scientific views that are mailed or delivered to the Docket will be scanned and placed in EPA's electronic public docket. Where practical, physical objects will be photographed, and the photograph will be placed in EPA's electronic public docket along with a brief description written by the docket staff.

C. How and to Whom Do I Submit Scientific Views?

You may submit scientific views electronically, by mail, or through hand delivery/courier. To ensure proper receipt by EPA, identify the appropriate docket identification number in the subject line on the first page of your scientific views. Please ensure that your scientific views are submitted within the specified period. Scientific views received after the close of the review period will be marked ''late.'' EPA is not required to consider these late scientific views.

1. *Electronically*. If you submit electronic information as prescribed below, EPA recommends that you include your name, mailing address, and an e-mail address or other contact information in the body of your scientific views. Also include this contact information on the outside of any disk or CD ROM you submit, and in any cover letter accompanying the disk or CD ROM. This ensures that you can be identified as the submitter of the scientific information and allows EPA to contact you in case EPA cannot read your scientific views due to technical difficulties or needs further information on the substance of your scientific views. EPA's policy is that EPA will not edit your scientific views, and any identifying or contact information provided in the body of the scientific views will be included as part of the scientific views that are placed in the official public docket, and made available in EPA's electronic public docket. If EPA cannot read your scientific views due to technical difficulties and cannot contact you for clarification, EPA may not be able to consider your scientific views.

i. *EPA Dockets*. Your use of EPA's electronic public docket to submit scientific views to EPA electronically is EPA's preferred method for receiving scientific views. Go directly to EPA Dockets at *http://www.epa.gov/edocket*, and follow the online instructions for submitting scientific views. To access EPA's electronic public docket from the EPA Internet Home Page, select ''Information Sources,'' ''Dockets,'' and ''EPA Dockets.'' Once in the system, select ''search,'' and then key in Docket ID No. OW–2003–0062. The system is an ''anonymous access'' system, which means EPA will not know your identity, e-mail address, or other contact information unless you provide it in the body of your information.

ii. *E-mail*. Scientific views may be sent by electronic mail (e-mail) to *OW-Docket@epa.gov*, Attention Docket No. OW–2003–0062. In contrast to EPA's electronic public docket, EPA's e-mail system is not an ''anonymous access'' system. If you send an e-mail scientific views directly to the Docket without going through EPA's electronic public docket, EPA's e-mail system automatically captures your e-mail address. E-mail addresses that are automatically captured by EPA's e-mail system are included as part of the information that is placed in the official public docket, and made available in EPA's electronic public docket.

iii. *Disk or CD ROM*. You may submit scientific views on a disk or CD ROM that you mail to the mailing address identified in section I.C.2. These electronic submissions will be accepted in WordPerfect or ASCII file format. Avoid the use of special characters and any form of encryption.

2. *By Mail*. Send your scientific views to: Water Docket in the EPA Docket Center, Environmental Protection Agency, Mailcode 4101T, 1200 Pennsylvania Ave., NW., Washington, DC 20460, Attention Docket ID No. OW–2003–0062.

3. *By Hand Delivery or Courier*. Deliver your scientific views to: Water Docket, EPA Docket Center, EPA West, Room B102, 1301 Constitution Ave., NW., Washington, DC, Attention Docket ID No. OW–2003–0062. Such deliveries are only accepted during the Docket's normal hours of operation as identified in section I.B.1.

D. What Should I Consider as I Prepare My Scientific views for EPA?

You may find the following suggestions helpful for preparing your scientific views:

1. Explain your scientific views as clearly as possible.
2. Describe any assumptions that you used.
3. Provide any technical information and/or data you used that support your scientific views.
4. Provide specific examples to illustrate your concerns.
5. Offer alternatives.
6. Make sure to submit your scientific views by the deadline identified.
7. To ensure proper receipt by EPA, identify the appropriate docket identification number in the subject line on the first page of your response. It would also be helpful if you provided the name, date, and **Federal Register** citation related to your scientific views.

II. Background and Today's Action

A. What Are Recommended Water Quality Criteria?

Recommended water quality criteria are the concentrations of a chemical in water at or below which aquatic life are protected from acute and chronic adverse effects of the chemical. Section 304(a)(1) of the Clean Water Act requires EPA to develop and publish, and from time to time revise, criteria for water accurately reflecting the latest scientific knowledge. Water quality criteria developed under section 304(a) are based solely on data and scientific judgments. They do not consider economic impacts or the technological feasibility of meeting the criteria in ambient water. Section 304(a) criteria provide guidance to States and Tribes in adopting water quality standards. The criteria also provide a scientific basis for EPA to develop Federally promulgated water quality standards under section 303(c).

B. What Is Diazinon and Why Are We Concerned About It?

Diazinon is an organophosphorus pesticide used throughout the U.S. to control insects in agricultural areas,

households and urban settings. It is mobile and moderately persistent in the environment. Due to its chemical properties and widespread use, diazinon is frequently found in effluents from wastewater treatment plants and in storm water runoff in both urban and agricultural areas. Diazinon is known to be extremely toxic to birds and aquatic life, particularly invertebrates. For these reasons, EPA has developed the following water quality criteria:

C. What Are the Draft National Recommended Water Quality Criteria?

Freshwater:

Aquatic life should not be affected unacceptably if the:

One hour average concentration of diazinon does not exceed 0.10 ug/L more than once every three years on the average (Acute Criterion) and if the four-day average concentration of diazinon does not exceed 0.10 ug/L more than once every three years on the average (chronic criterion).

Saltwater:

Aquatic life should not be affected unacceptably if the:

One-hour average concentration of diazinon does not exceed 0.82 ug/L more than once every three years on the average (acute criterion) and if the four-day average concentration of diazinon does not exceed 0.40 ug/L more than once every three years on the average (chronic criterion).

D. What Specific Questions of Science Does EPA Want Views On?

Though the public is welcome to submit scientific views on any component of the diazinon aquatic life criteria document, EPA is specifically interested in scientific views on the following issues of science:

- The derivation of final chronic values (FCVs) as protective of chronic effects to freshwater and saltwater aquatic life using the available acute and chronic data;
- Scientific information or data made available since the literature search was completed in 1997. For example, information regarding the sub-lethal effects of diazinon (*e.g.*, olfactory or predator-prey response).

E. Where Can I Find More Information on EPA's Revised Process for Developing New or Revised Draft Criteria?

The Agency published detailed information about its revised process for developing and revising criteria in the **Federal Register** on December 10, 1998 (63 FR 68354) and in the EPA document entitled, *National Recommended Water Quality—Correction* (EPA 822–Z–99–001, April 1999). The purpose of the revised process is to provide expanded opportunities for public input, and to make the criteria development process more efficient. Also, EPA notified the public of its intent to develop aquatic life criteria for diazinon in the **Federal Register** on October 29, 1999 (64 FR 58409). At that time, EPA solicited any pertinent data or scientific views that would be useful in developing the draft aquatic life criteria for diazinon.

Dated: December 23, 2003.

Geoffrey H. Grubbs,

Director, Office of Science and Technology.

[FR Doc. 03–32210 Filed 12–30–03; 8:45 am]

BILLING CODE 6560–50–P

FARM CREDIT ADMINISTRATION

Strategic Plan for Fiscal Years 2004–2009

AGENCY: Farm Credit Administration.

ACTION: Notice of approval and availability.

SUMMARY: This notice announces the approval and availability of the Farm Credit Administration's (FCA or agency) Strategic Plan for Fiscal Years 2004–2009 (revised Strategic Plan). The Government Performance and Results Act of 1993 requires that Federal agencies update their strategic plans at least every 3 years and, in doing so, solicit the views and suggestions of those entities potentially affected by or interested in the plan. In formulating the revised Strategic Plan, the agency solicited input from various constituent groups. Additionally, a draft of the Strategic Plan was made available for comment in October 2003.

DATES: December 11, 2003.

ADDRESSES: The revised Strategic Plan is available on the agency's Web site at *http://www.fca.gov.*

FOR FURTHER INFORMATION CONTACT: Jeff Walker, Executive Assistant, Office of the Chief Operating Officer, Farm Credit Administration, McLean, VA 22102–5090, (703) 883–4271; TTY (703) 883–4056.

SUPPLEMENTARY INFORMATION: The Farm Credit Administration (FCA or agency) is charged by Congress, as established in Title V of the Farm Credit Act of 1971, as amended, with the mandate of overseeing the agricultural Government-sponsored enterprises (GSEs) serving rural America. These include the Farm Credit System (System) and the Federal Agricultural Mortgage Corporation. FCA also has statutory responsibility to examine the National Consumer Cooperative Bank, a non-System entity operating as a federally chartered, privately owned banking corporation.

The Government Performance and Results Act of 1993 (GPRA) requires that each Federal agency establish a strategic plan that covers a period of not less than 5 years. It also mandates that these plans be updated and revised at least every 3 years. In accordance with GPRA, FCA issued its first strategic plan in 1997. A revised plan was approved in 2000. Thus, the Strategic Plan for Fiscal Years 2004–2009 represents the second update to the agency's original Strategic Plan completed under GPRA. The revised Strategic Plan describes our mission, our strategic goals, and strategies to achieve those goals over the next 5 years.

The Strategic Plan for Fiscal Years 2004–2009 is the culmination of an extensive outreach effort. The FCA Board began its work on this plan in April 2003 by initiating a series of strategic planning sessions to seek input from farmers, the Farm Credit Council and other Farm Credit System representatives, academics and economists, the American Bankers Association, the Independent Community Bankers of America, former FCA Board chairmen and FCA senior management. Subsequent planning sessions held by the Board and the Office of the Chief Operating Officer over the next several months were used to establish specific direction for formulation of a draft Strategic Plan for Fiscal Years 2004–2009, which the agency released for comment in October 2003 for a 30-day period.

The agency received 24 comment letters on the draft Strategic Plan for Fiscal Years 2004–2009. Most of the comment letters (22 of 24) came from the agency's staff. To the extent practicable, applicable comments recommending revisions to specific sections of the draft Strategic Plan were incorporated in the revised Strategic Plan. Most of the revisions made were in the interest of providing clarification and did not represent material changes to the draft Strategic Plan. The most substantive revision was the decision to identify Goal 3 in the Plan, Implementation of the President's Management Agenda, as the third strategic goal rather than an operational goal, as it was defined in the draft Strategic Plan. One commenter felt this goal was also strategic in nature, just as Goals 1 and 2, and the FCA Board ultimately agreed.

Dated: December 23, 2003.

James M. Morris,

Acting Secretary, Farm Credit Administration Board.

[FR Doc. 03–32128 Filed 12–30–03; 8:45 am]

BILLING CODE 6705–01–P

FEDERAL COMMUNICATIONS COMMISSION

Notice of Public Information Collection(s) Being Reviewed by the Federal Communications Commission, Comments Requested

December 18, 2003.

SUMMARY: The Federal Communications Commission, as part of its continuing effort to reduce paperwork burden invites the general public and other Federal agencies to take this opportunity to comment on the following information collection(s), as required by the Paperwork Reduction Act (PRA) of 1995, Public Law 104–13. An agency may not conduct or sponsor a collection of information unless it displays a currently valid control number. No person shall be subject to any penalty for failing to comply with a collection of information subject to the Paperwork Reduction Act that does not display a valid control number. Comments are requested concerning (a) whether the proposed collection of information is necessary for the proper performance of the functions of the Commission, including whether the information shall have practical utility; (b) the accuracy of the Commission's burden estimate; (c) ways to enhance the quality, utility, and clarity of the information collected; and (d) ways to minimize the burden of the collection of information on the respondents, including the use of automated collection techniques or other forms of information technology.

DATES: Written Paperwork Reduction Act (PRA) comments should be submitted on or before March 1, 2004. If you anticipate that you will be submitting comments, but find it difficult to do so within the period of time allowed by this notice, you should advise the contact listed below as soon as possible.

ADDRESSES: Direct all Paperwork Reduction Act (PRA) comments to Les Smith, Federal Communications Commission, Room 1–A804, 445 12th Street, SW., Washington, DC 20554 or via the Internet to *Leslie.Smith@fcc.gov.*

FOR FURTHER INFORMATION CONTACT: For additional information or copies of the information collection(s), contact Les Smith at (202) 418–0217 or via the Internet at *Leslie.Smith@fcc.gov.*

SUPPLEMENTARY INFORMATION:

OMB Control Number: 3060–0761.

Title: Closed Captioning of Video Programming.

Form Number: N/A.

Type of Review: Extension of a currently approved collection.

Respondents: Business and other for-profit entities; and individuals or households.

Number of Respondents: 1,425.

Estimate Time per Response: 30 mins. to 5 hrs.

Frequency of Response: On occasion reporting requirement; third party disclosure.

Total Annual Burden: 2,013 hours.

Total Annual Costs: $19,000.

Needs and Uses: The FCC's Report and Order, MM Docket No. 95–176, FCC 97–279, adopted rules and implementation schedules for the closed captioning of video programming, pursuant to section 305 of the Telecommunications Act of 1996, which added Section 713, Video Programming Accessibility, to the Communications Act of 1934, as amended. The requirements set forth in section 713 are intended to ensure that video programming is accessible to individuals with hearing disabilities through close captioning, regardless of the delivery mechanism used to reach consumers. Pursuant to section 713, the FCC established phase-in schedules to increase the amount of closed captioned programming. The rules also provided procedures for entities to use to request exemptions of the closed captioning requirements based on an undue burden standard. Furthermore, they detailed a complaint process for viewers to use for the enforcement of closed captioning requirements.

Federal Communications Commission.

Marlene H. Dortch,

Secretary.

[FR Doc. 03–32111 Filed 12–30–03; 8:45 am]

BILLING CODE 6712–10–P

FEDERAL COMMUNICATIONS COMMISSION

Notice of Public Information Collection(s) Being Reviewed by the Federal Communications Commission

December 18, 2003.

SUMMARY: The Federal Communications Commission, as part of its continuing effort to reduce paperwork burden invites the general public and other Federal agencies to take this opportunity to comment on the following information collection(s), as required by the Paperwork Reduction Act of 1995, Public Law 104–13. An agency may not conduct or sponsor a collection of information unless it displays a currently valid control number. No person shall be subject to any penalty for failing to comply with a collection of information subject to the Paperwork Reduction Act (PRA) that does not display a valid control number. Comments are requested concerning (a) whether the proposed collection of information is necessary for the proper performance of the functions of the Commission, including whether the information shall have practical utility; (b) the accuracy of the Commission's burden estimate; (c) ways to enhance the quality, utility, and clarity of the information collected; and (d) ways to minimize the burden of the collection of information on the respondents, including the use of automated collection techniques or other forms of information technology.

DATES: Written Paperwork Reduction Act (PRA) comments should be submitted on or before January 30, 2004. If you anticipate that you will be submitting comments, but find it difficult to do so within the period of time allowed by this notice, you should advise the contact listed below as soon as possible.

ADDRESSES: Direct all comments regarding this Paperwork Reduction Act submission to Judith B. Herman, Federal Communications Commission, Room 1–C804, 445 12th Street, SW., DC 20554 or via the Internet to *Judith-B.Herman@fcc.gov*.

FOR FURTHER INFORMATION CONTACT: For additional information or copies of the information collection(s), contact Judith B. Herman at 202–418–0214 or via the Internet at *Judith-B.Herman@fcc.gov*.

SUPPLEMENTARY INFORMATION:

OMB Control No.: 3060–XXXX.

Title: Application for Authority to Construct or Make Changes in an International Broadcast Station.

Form No.: FCC Form 420–IB.

Type of Review: New collection.

Respondents: Business or other for-profit.

Number of Respondents: 10 respondents; 160 responses.

Estimated Time Per Response: 16 hours.

Frequency of Response: On occasion, annual and other reporting requirements.

Total Annual Burden: 160 hours.

Total Annual Cost: $44,000.

Needs and Uses: The Federal Communications Commission has developed a new FCC Form 420–IB to

facilitate the Commission's goal to implement electronic filing of the form and to accommodate any changes to the form in the future. International broadcasters will file the FCC Form 420–IB in lieu of FCC Form 309. If the Commission did not collect this information, it would not be in a position to effectively coordinate spectrum for international broadcasters or to act for entities in times of frequency interference or adverse propagation conditions. The orderly nature of the provision of international broadcast service would be in jeopardy without the Commission's involvement.

OMB Control No.: 3060–XXXX.

Title: Application for an International Broadcast Station License.

Form No.: FCC Form 421–IB.

Type of Review: New collection.

Respondents: Business or other for-profit.

Number of Respondents: 10 respondents; 120 responses.

Estimated Time Per Response: 12 hours.

Frequency of Response: On occasion, annual and other reporting requirements.

Total Annual Burden: 120 hours.

Total Annual Cost: $36,000.

Needs and Uses: The Federal Communications Commission has developed FCC Form 421–IB to facilitate the Commission's goal to implement electronic filing of the form and to accommodate any changes to the form in the future. International broadcasters will file the FCC Form 421–IB in lieu of FCC Form 310.

OMB Control No.: 3060–XXXX.

Title: Application for Renewal of an International Broadcast Station License.

Form No: FCC Form 422–IB.

Type of Review: New collection.

Respondents: Business or other for-profit.

Number of Respondents: 10 respondents; 60 responses.

Estimated Time Per Response: 6 hours.

Frequency of Response: On occasion, annual and other reporting requirements.

Total Annual Burden: 60 hours.

Total Annual Cost: $32,000.

Needs and Uses: The Federal Communications Commission has developed FCC Form 422–IB to facilitate the Commission's goal to implement electronic filing of the form and to accommodate any changes to the form in the future. International broadcasters will file the FCC Form 422–IB in lieu of FCC Form 311.

OMB Control No.: 3060–XXXX.

Title: Application for Permit to Deliver Programs to Foreign Broadcast Stations.

Form No.: FCC Form 423–IB.

Type of Review: New collection.

Respondents: Business or other for-profit.

Number of Respondents: 30 respondents; 240 responses.

Estimated Time Per Response: 8 hours (average).

Frequency of Response: On occasion, annual and other reporting requirements.

Total Annual Burden: 240 hours.

Total Annual Cost: $62,000.

Needs and Uses: The Federal Communications Commission has developed a new FCC Form 423–IB to facilitate the Commission's goal to implement electronic filing of the form and to accommodate any changes to the form in the future. International broadcasters will file the FCC Form 423–IB in lieu of FCC Form 308.

OMB Control No.: 3060–1039.

Title: Nationwide Programmatic Agreement Regarding the Section 106 National Historic Preservation Act—Review Process, WT Docket No. 03–128.

Form No.: To be determined.

Type of Review: Extension of a currently approved collection.

Respondents: Individuals or households, business or other for-profit, not-for-profit institutions, and State, local or tribal government.

Number of Respondents: 12,000 respondents; 7,800 responses.

Estimated Time Per Response: 1–3 hours.

Frequency of Response: On occasion reporting requirement, third party disclosure requirement and recordkeeping requirement.

Total Annual Burden: 73,800 hours.

Total Annual Cost: $10,017,000.

Needs and Uses: The data is used by FCC staff, State Historic Preservation Officers (SHPO) Tribal Historic Preservation Officers (THPO) and the Advisory Council of Historic Preservation (ACHP) to take such actions as may be necessary to ascertain whether a proposed action may affect historic properties that are listed or eligible for listing in the National Register as directed by Section 106 of the National Historic Preservation Act (NHPA) and the Commission's rules.

Federal Communications Commission.

Marlene H. Dortch,

Secretary.

[FR Doc. 03–32112 Filed 12–30–03; 8:45 am]

BILLING CODE 6712–01–P

FEDERAL COMMUNICATIONS COMMISSION

Notice of Public Information Collection(s) Being Submitted to OMB for Review and Approval

December 16, 2003.

SUMMARY: The Federal Communications Commission, as part of its continuing effort to reduce paperwork burden invites the general public and other Federal agencies to take this opportunity to comment on the following information collection, as required by the Paperwork Reduction Act of 1995, Public Law 104–13. An agency may not conduct or sponsor a collection of information unless it displays a currently valid control number. No person shall be subject to any penalty for failing to comply with a collection of information subject to the Paperwork Reduction Act (PRA) that does not display a valid control number. Comments are requested concerning (a) whether the proposed collection of information is necessary for the proper performance of the functions of the Commission, including whether the information shall have practical utility; (b) the accuracy of the Commission's burden estimate; (c) ways to enhance the quality, utility, and clarity of the information collected; and (d) ways to minimize the burden of the collection of information on the respondents, including the use of automated collection techniques or other forms of information technology.

DATES: Written comments should be submitted on or before January 30, 2004. If you anticipate that you will be submitting comments, but find it difficult to do so within the period of time allowed by this notice, you should advise the contact listed below as soon as possible.

ADDRESSES: Direct all comments to Les Smith, Federal Communications Commission, Room 1–A804, 445 12th Street, SW., Washington, DC 20554 or via the Internet to *Leslie.Smith@fcc.gov* or Kim A. Johnson, Office of Management and Budget (OMB), Room 10236 NEOB, Washington, DC 20503, (202) 395–3562 or via the Internet at *Kim_A._Johnson@omb.eop.gov.*

FOR FURTHER INFORMATION CONTACT: For additional information or copy of the information collection(s) contact Les Smith at (202) 418–0217 or via the Internet at *Leslie.Smith@fcc.gov.*

SUPPLEMENTARY INFORMATION:

OMB Control Number: 3060–1038.

Type of Review: Revision of a currently approved collection.

Title: Digital Television Transition Information Questionnaires.

Form Number: N/A.

Respondents: Business or other for-profit entities.

Number of Respondents: 844.

Estimated Time per Response: 4 to 24 hours.

Frequency of Response: On occasion reporting requirement.

Total Annual Burden: 4,823 hours.

Total Annual Cost: $251,400.

Needs and Uses: In the Telecommunications Act of 1996, Congress directed that every broadcaster be given a second channel for digital operations. At the end of the transition, broadcasters' analog channels will be returned to the government. Congress set a target date of December 31, 2006, for the end of the transition, although that date can be extended if 85% of viewers in a particular market do not have access to the digital signals. In addition, at the end of the transition the broadcast spectrum will contract from channels 2–69 to channels 2–51. This 108 MHz of spectrum (channels 52–69) can then be used by advanced wireless services and public safety authorities. There are several key building blocks to a successful transition. First, content—consumers must perceive something significantly different than what they have in analog. Second, distribution—the content must be delivered to consumers in a simple and convenient way. Third, equipment—must be capable, affordable and consumer-friendly. And fourth, education—consumers must be educated about what digital television is, and what it can do for them. These information requests are designed to gather data in these key areas.

OMB Control Number: 3060–XXXX.

Title: Telecommunication Relay Services and Speech-to-Speech Services for Individual with Hearing and Speech Disabilities, CC Docket No. 98–67 (Declaratory Ruling), FCC 03–190.

Form Number: N/A.

Type of Review: New collection.

Respondents: Business or other for-profit entities.

Number of Respondents: 1.

Estimated Time per Response: 8 hours.

Frequency of Response: Annual reporting requirement.

Total Annual Burden: 8 hours.

Total Annual Cost: None.

Needs and Uses: On August 1, 2003, the Commission released the Declaratory Ruling, *In the Matter of Telecommunication Relay Services and Speech-to-Speech Services for Individuals with Hearing and Speech Disabilities, CC 98–67, FCC 03–190.* In the *Declaratory Ruling,* the Commission clarifies that captioned telephone voice carry over (VCO) service is a type of telecommunications relay service (TRS) and that eligible providers of such services are eligible to recover their costs in accordance with section 225 of the Communications Act. The Commission also clarifies that certain TRS mandatory minimum standards do not apply to captioned VCO service, and waives §§ 64.604(a)(1) and (a)(3) of the Commission's rules for all current and future captioned telephone VCO service providers, for the same period of time indicated herein, beginning on the date of release of this *Declaratory Ruling.* These waivers are contingent on the filing of annual reports, for a period of three years, with the Commission. Sections 64.604 (a)(1) and (a)(3) of the Commission's rules, which contain information collection requirements under the Paperwork Reduction Act, are not effective until approved by the Office of Management and Budget.

Federal Communications Commission.

Marlene H. Dortch,

Secretary.

[FR Doc. 03–32113 Filed 12–30–03; 8:45 am]

BILLING CODE 6712–01–P

FEDERAL COMMUNICATIONS COMMISSION

Notice of Public Information Collection(s) Being Reviewed by the Federal Communications Commission

December 19, 2003.

SUMMARY: The Federal Communications Commission, as part of its continuing effort to reduce paperwork burden invites the general public and other Federal agencies to take this opportunity to comment on the following information collection(s), as required by the Paperwork Reduction Act (PRA) of 1995, Public Law No. 104–13. An agency may not conduct or sponsor a collection of information unless it displays a currently valid control number. No person shall be subject to any penalty for failing to comply with a collection of information subject to the Paperwork Reduction Act (PRA) that does not display a valid control number. Comments are requested concerning (a) whether the proposed collection of information is necessary for the proper performance of the functions of the Commission, including whether the information shall have practical utility; (b) the accuracy of the Commission's burden estimate; (c) ways to enhance the quality, utility, and clarity of the information collected; and (d) ways to minimize the burden of the collection of information on the respondents, including the use of automated collection techniques or other forms of information technology.

DATES: Written Paperwork Reduction Act (PRA) comments should be submitted on or before January 30, 2004. If you anticipate that you will be submitting PRA comments, but find it difficult to do so within the period of time allowed by this notice, you should advise the contact listed below as soon as possible.

ADDRESSES: Direct all Paperwork Reduction Act (PRA) comments to Judith B. Herman, Federal Communications Commission, Room 1–C804, 445 12th Street SW., DC 20554 or via the Internet to *Judith-B.Herman@fcc.gov.*

FOR FURTHER INFORMATION CONTACT: For additional information or copies of the information collection(s), contact Judith B. Herman at (202) 418–0214 or via the Internet at *Judith-B.Herman@fcc.gov.*

SUPPLEMENTARY INFORMATION:

OMB Control No.: 3060–0893.

Title: Universal Licensing Service (ULS) Database Corrections.

Form No.: N/A.

Type of Review: Extension of a currently approved collection.

Respondents: Individuals or households, business or other for-profit, not-for-profit institutions, state, local or tribal government.

Number of Respondents: 4,442 respondents; 21,000 responses.

Estimated Time Per Response: .50 hours.

Frequency of Response: On occasion reporting requirement.

Total Annual Burden: 10,500 hours.

Total Annual Cost: N/A.

Needs and Uses: This collection is necessary to ensure that the ULS database is as accurate as possible. It involves the correction of licensing data errors detected through integrity reports obtained by searching the ULS database. The data must be correct to prepare for specific auctions of certain radio services that have been placed in the ULS but have not yet been auctioned. The Commission will issue a series of Public Notices to conduct database corrections for services that are migrating to ULS. We have included Broadband Licensing System (BLS) licensees in this collection. This data aids in spectrum management and provides for an efficient graphical user interface for each potential auction participant.

OMB Control No.: 3060–0947.

Title: Section 101.1327, Renewal Expectancy for EA Licensees.

Form No.: N/A.

Type of Review: Extension of a currently approved collection.

Respondents: Business or other for-profit.

Number of Respondents: 18,820.

Estimated Time Per Response: .50 '' 20 hours.

Frequency of Response: Every 10 year reporting requirement.

Total Annual Burden: 284,653 hours.

Total Annual Cost: $18,820.

Needs and Uses: The information required by Section 101.1327 is used to determine whether a renewal applicant of a Multiple Address System has complied with the requirement to provide substantial service by the end of the ten-year initial license term. The FCC uses the information to determine whether an applicant's license will be renewed at the end of the license period.

Federal Communications Commission.

Marlene H. Dortch,

Secretary.

[FR Doc. 03–32114 Filed 12–30–03; 8:45 am]

BILLING CODE 6712–01–P

FEDERAL COMMUNICATIONS COMMISSION

Notice of Public Information Collection(s) Being Reviewed by the Federal Communications Commission for Extension Under Delegated Authority

December 19, 2003.

SUMMARY: The Federal Communications Commission, as part of its continuing effort to reduce paperwork burden invites the general public and other Federal agencies to take this opportunity to comment on the following information collection(s), as required by the Paperwork Reduction Act (PRA) of 1995, Public Law 104–13. An agency may not conduct or sponsor a collection of information unless it displays a currently valid control number. No person shall be subject to any penalty for failing to comply with a collection of information subject to the Paperwork Reduction Act (PRA) that does not display a valid control number. Comments are requested concerning (a) whether the proposed collection of information is necessary for the proper performance of the functions of the Commission, including whether the information shall have practical utility; (b) the accuracy of the Commission's burden estimate; (c) ways to enhance the quality, utility and clarity of the information collected; and (d) ways to minimize the burden of the collection of information on the respondents, including the use of automated collection techniques or other forms of information technology.

DATES: Written Paperwork Reduction (PRA) comments should be submitted on or before March 1, 2004. If you anticipate that you will be submitting comments, but find it difficult to do so within the period of time allowed by this notice, you should advise the contact listed below as soon as possible.

ADDRESSES: Direct all Paperwork Reduction Act (PRA) comments to Les Smith, Federal Communications Commission, Room 1–A804, 445 12th Street SW., Washington, DC 20554 or via the Internet to *Leslie.Smith@fcc.gov*.

FOR FURTHER INFORMATION CONTACT: For additional information or copies of the information collection(s), contact Les Smith at (202) 418–0217 or via the Internet at *Leslie.Smith@fcc.gov*.

SUPPLEMENTARY INFORMATION:

OMB Control Number: 3060–0489

Title: Section 73.37, Applications for Broadcast Facilities, Showing Required

Form Number: N/A

Type of Review: Extension of currently approved collection

Respondents: Business or other for-profit entities

Number of Respondents: 365

Estimated Hours per Response: 1

Frequency of Response: On occasion reporting requirement

Total Annual Burden: 365 hours

Total Annual Cost: $798,750

Needs and Uses: 47 CFR 73.37(d) requires an applicant for a new AM broadcast station, or for a major change in an authorized AM broadcast station, to make a satisfactory showing that objectionable interference will not result to an authorized AM station as a condition for its acceptance if new or modified nighttime operation by a Class B station is proposed. 47 CFR 73.37(f) requires applicants seeking facilities modification that would result in spacings that fail to meet any of the separation requirements to include a showing that an adjustment has been made to the radiated signal which effectively results in a site-to-site radiation that is equivalent to the radiation of a station with standard Model I facilities. FCC staff use the data to ensure that objectionable interference will not be caused to other authorized AM stations.

OMB Control Number: 3060–0320

Title: Section 73.1350, Transmission System Operation

Form Number: N/A

Type of Review: Extension of currently approved collection

Respondents: Businesses or other for-profit entities; Not-for-profit institutions

Number of Respondents: 411

Estimated Hours per Response: 0.5 hours

Frequency of Response: On occasion reporting requirements

Total Annual Costs: $0.00

Total Annual Burden: 206 hours

Needs and Uses: 47 CFR 73.1350(g) requires licensees to submit a notification to the FCC in Washington, DC whenever a transmission system control point is established at a location other than at the main studio or transmitter within 3 days of the initial use of that point. This notification is not required if responsible station personnel can be contacted at the transmitter or studio site during hours of operation. FCC staff use the data to maintain complete operating information regarding licensees to be used in the event that FCC field staff needs to contact the station about interference.

OMB Control Number: 3060–0182

Title: Section 73.1620, Program Tests

Form Number: N/A

Type of Review: Extension of currently approved collection

Respondents: Business or other for-profit entities; Not-for-profit institutions

Number of Respondents: 1,501

Estimated Hours per Response: 1—5 hours

Frequency of Response: On occasion reporting requirement; Third party disclosure

Total Annual Burden: 1,505 hours

Total Annual Costs: $0.00

Needs and Uses: 47 CFR 73.1620(a)(1) requires permittees of a nondirectional AM or FM station, or a nondirectional or directional TV station to notify the FCC upon beginning of program tests. An application for license must be filed within 10 days of this notification. 47 CFR 73.1620(a)(2) requires a permittee of an AM or FM station with a directional antenna to file a request for program test authority 10 days prior to date on which it desires to begin program tests. This is filed in conjunction with an application for license. Section 73.1620(f) requires licensees of UHF TV stations, assigned to the same allocated channel which a 1000 watt UHF translator station is authorized to use, to notify the licensee of the translator station at least 10 days prior to commencing or resuming operation and certify to the FCC that such advance notice has been given. 47 CFR 73.1620(g) requires permittees to report any deviations from their promises, if any, in their application for license to cover their construction permit (FCC Form 302) and on the first anniversary of their commencement of program tests. The notification in 47 CFR 73.1620(a) alerts the Commission

that construction of a station has been completed and that the station is broadcasting program material. The notification in 47 CFR 73.1620(f) alerts the UHF translator station that the potential of interference exists. The report in 47 CFR 73.1620(g) stating deviations are necessary to eliminate possible abuses of the FCC's processes and to ensure that comparative promises relating to service to the public are not inflated.

OMB Control Number: 3060–0346

Title: Section 78.27, License Conditions

Form Number: N/A

Type of Review: Extension of a currently approved collection

Respondents: Individuals or households; Business and other for-profit entities; and Not-for-profit institutions

Number of Respondents: 50

Estimated Time per Response: 10 mins. (0.167 hrs.)

Frequency of Response: One time and on occasion reporting requirements

Total Annual Burden: 8 hours

Total Annual Costs: None

Needs and Uses: 47 CFR 78.27 requires licensees of Cable Television Relay Service (CARS) stations to notify the FCC in writing when the station commences operation. A CARS licensee, which needs additional time to complete construction of the station, must request an extension of time from the FCC 30 days prior to the expiration of the one-year construction period. The Commission uses these filings to provide accurate CARS channel usage for frequency coordination, to prevent warehousing of spectrum, and to prevent frequency interference.

Federal Communications Commission.

Marlene H. Dortch,

Secretary.

[FR Doc. 03–32115 Filed 12–30–03; 8:45 am]

BILLING CODE 6712–01–P

FEDERAL COMMUNICATIONS COMMISSION

[CC Docket No. 96–45; DA 03–3824]

ALLTEL Communications, Inc. for Designation as an Eligible Telecommunications Carrier and Rural Service Area Redefinition in North Carolina

AGENCY: Federal Communications Commission.

ACTION: Notice; solicitation of comments.

SUMMARY: In this document, the Wireline Competition Bureau sought comment on the ALLTEL Communications, Inc. (ALLTEL) petition. ALLTEL is seeking designation as an eligible telecommunications carrier (ETC) to receive federal universal service support for service offered throughout its licensed service area in the state of North Carolina. ALLTEL also requests that the Commission redefine certain rural service areas.

DATES: Comments are due on or before January 12, 2004. Reply comments are due on or before January 26, 2004.

ADDRESSES: Federal Communications Commission, 445 12th Street SW., Washington, DC 20554. See Supplementary Information for further filing instructions.

FOR FURTHER INFORMATION CONTACT: Karen Franklin, Attorney, Wireline Competition Bureau, Telecommunications Access Policy Division, (202) 418–7400, TTY (202) 418–0484.

SUPPLEMENTARY INFORMATION: This is a summary of the Commission's Public Notice, CC Docket No. 96–45, released November 26, 2003. On August 26, 2003, ALLTEL filed with the Commission a petition pursuant to section 214(e)(6) of the Communications Act of 1934, as amended, so that it can receive Federal universal service support in the state of North Carolina. ALLTEL also requests that the Commission redefine certain rural service areas pursuant to section 54.207 of the Commission's rules. ALLTEL provides commercial mobile radio services and seeks federal universal service support for its service offered in non-rural wire centers currently served by BellSouth Telecomm Inc., Verizon South, Inc.-NC, Verizon South, Inc. (CONTEL), and North State Telephone Co., and for service offered in rural wire centers currently served by ALLTEL Carolina, Inc., Atlantic Telephone Membership, Central Telephone Co., Concord Telephone Company, Ellerbe Telephone Co. Inc., Lexcom Telephone Company, Mebtel Inc., Piedmont Telephone Membership, Pineville Telephone Co., Randolph Telephone Co., Randolph Telephone Membership, Service Telephone Co., Sprint Mid-Atlantic, Star Telephone Membership, Surry Telephone Membership, Tri-County Telephone Membership, and Yadkin Valley Telephone Membership. ALLTEL has requested that the Commission consider ALLTEL's request to become an ETC in non-rural service areas separately from its rural area ETC designation requests, if such bifurcation would expedite Commission action on ALLTEL's ETC petitions as they relate to the non-rural service areas.

ALLTEL asserts that the North Carolina Utilities Commission (North Carolina Commission) does not regulate commercial mobile radio service providers for purposes of ETC designations and presents an order from the North Carolina Commission asserting its lack of jurisdiction. Hence, according to ALLTEL, the Commission has jurisdiction under section 214(e)(6) to consider and grant its petition. ALLTEL also maintains that it satisfies all the statutory and regulatory prerequisites for ETC designation and that designating ALLTEL as an ETC in areas served by rural LECs will serve the public interest.

In accordance with section 54.207 of the Commission's rules, ALLTEL requests that the Commission designate ALLTEL as an ETC in a service area defined along boundaries that differ from the incumbent rural local exchange carriers' study area boundaries. The service area requested by ALLTEL for ETC designation partially covers the study areas of ALLTEL Carolina, Inc., Central Telephone Company and Surry Telephone Membership Corporation. ALLTEL requests a redefinition of these rural service areas so each wire center in each of the respective study areas is designated as a separate service area. ALLTEL limits its redefinition request to those wire centers that ALLTEL serves in its entirety and notes that where ALLTEL serves only a portion of a wire center, it does not request ETC status for that wire center. ALLTEL maintains that the proposed redefinition of service areas for ETC purposes is consistent with the factors to be considered when redefining a rural telephone company service area, as enumerated by the Federal-State Joint Board on Universal Service.

The petitioner must provide copies of its petition to the North Carolina Commission. The Commission sent a copy of this Public Notice to the North Carolina Commission by overnight express mail to ensure that the North Carolina Commission is notified of the notice and comment period.

Pursuant to §§ 1.415 and 1.419 of the Commission's rules, 47 CFR 1.415, 1.419, interested parties may file comments as follows: comments are due on or before January 12, 2004, and reply comments are due on or before January 26, 2004. Comments may be filed using the Commission's Electronic Comment Filing System (ECFS) or by filing paper copies. *See Electronic filing of Documents in Rulemaking Proceedings,* 63 FR 24121, May 1, 1998.

Comments filed through the ECFS can be sent as an electronic file via the Internet to *http://www.fcc.gov/e-file/*

ecfs.html. Generally, only one copy of an electronic submission must be filed. If multiple docket or rulemaking numbers appear in the caption of this proceeding, however, commenters must transmit one electronic copy of the comments to each docket or rulemaking number referenced in the caption. In completing the transmittal screen, commenters should include their full name, U.S. Postal Service mailing address, and the applicable docket or rulemaking number. Parties may also submit an electronic comment by Internet e-mail. To get filing instructions for e-mail comments, commenters should send an e-mail to *ecfs@fcc.gov,* and should include the following words in the body of the message, ''get form <your e-mail address>.'' A sample form and directions will be sent in reply.

Parties who choose to file by paper must file an original and four copies of each filing. If more than one docket or rulemaking number appears in the caption of this proceeding, commenters must submit two additional copies for each additional docket or rulemaking number. Filings can be sent by hand or messenger delivery, by commercial overnight courier, or by first-class or overnight U.S. Postal Service mail (although we continue to experience delays in receiving U.S. Postal Service mail). The Commission's contractor, Natek, Inc., will receive hand-delivered or messenger-delivered paper filings for the Commission's Secretary at 236 Massachusetts Avenue NE., Suite 110, Washington, DC 20002. The filing hours at this location are 8 a.m. to 7 p.m. All hand deliveries must be held together with rubber bands or fasteners. Any envelopes must be disposed of before entering the building. Commercial overnight mail (other than U.S. Postal Service Express Mail and Priority Mail) must be sent to 9300 East Hampton Drive, Capitol Heights, MD 20743. U.S. Postal Service first-class mail, Express Mail, and Priority Mail should be addressed to 445 12th Street SW., Washington, DC 20554. All filings must be sent to the Commission's Secretary, Marlene H. Dortch, Office of the Secretary, Federal Communications Commission, 445 12th Street SW., Washington, DC 20554.

Parties also must send three paper copies of their filing to Sheryl Todd, Telecommunications Access Policy Division, Wireline Competition Bureau, Federal Communications Commission, 445 12th Street SW., Room 5–B540, Washington, DC 20554. In addition, commenters must send diskette copies to the Commission's copy contractor, Qualex International, Portals II, 445 12th Street SW., Room CY–B402, Washington, DC 20054.

Pursuant to § 1.1206 of the Commission's rules, 47 CFR 1.1206, this proceeding will be conducted as a permit-but-disclose proceeding in which ex parte communications are permitted subject to disclosure.

Federal Communications Commission.

Sharon Webber,

Deputy Chief, Wireline Competition Bureau, Telecommunications Access Policy Division.

[FR Doc. 03–32116 Filed 12–30–03; 8:45 am]

BILLING CODE 6712–01–P

FEDERAL COMMUNICATIONS COMMISSION

[CC Docket No. 96–45; DA 03–3825]

ALLTEL Communications, Inc. Petition for Designation as an Eligible Telecommunications Carrier and Rural Service Area Redefinition in Georgia

AGENCY: Federal Communications Commission.

ACTION: Notice; solicitation of comments.

SUMMARY: In this document, the Wireline Competition Bureau sought comment on the ALLTEL Communications, Inc. (ALLTEL) petition. ALLTEL is seeking designation as an eligible telecommunications carrier (ETC) to receive federal universal service support for service offered throughout its licensed service area in the state of Georgia. ALLTEL also requests that the Commission redefine certain rural service areas.

DATES: Comments are due on or before January 12, 2004. Reply comments are due on or before January 26, 2004.

ADDRESSES: Federal Communications Commission, 445 12th Street, SW., Washington, DC 20554. *See* **SUPPLEMENTARY INFORMATION** for further filing instructions.

FOR FURTHER INFORMATION CONTACT: Karen Franklin, Attorney, Wireline Competition Bureau, Telecommunications Access Policy Division, (202) 418–7400, TTY (202) 418–0484.

SUPPLEMENTARY INFORMATION: This is a summary of the Commission's Public Notice, CC Docket No. 96–45, released November 26, 2003. On August 26, 2003, ALLTEL filed with the Commission a petition pursuant to section 214(e)(6) of the Communications Act of 1934, as amended, so that it can receive federal universal service support in the state of Georgia. ALLTEL also requests that the Commission redefine certain rural service areas pursuant to section 54.207 of the Commission's rules. ALLTEL provides commercial mobile radio services and seeks federal universal service support for its service offered in non-rural wire centers currently served by BellSouth Telecomm Inc., and for service offered in rural wire centers currently served by Quincy Telephone Co., Progressive Rural Telephone Cooperative, Planters Rural Telephone Cooperative, Plant Telephone Co., Pineland Telephone Cooperative, Pembroke Telephone Co., Inc., Hawkinsville Telephone Co., Glenwood Telephone Co., Georgia Telephone Corp., Frontier Communications of Georgia, Darien Telephone Co. Inc., Coastal Utilities, Inc., Camden Telephone & Telegraph Co., Bulloch County Rural Telephone Co., Brantley Telephone Co. Inc., Alma Telephone Co., Inc., ALLTEL Georgia Communication Corporation, ALLTEL Georgia, Inc., Georgia ALLTEL Telecomm Inc., and Accucomm Telecommunications, Inc. ALLTEL has requested that the Commission consider ALLTEL's request to become an ETC in non-rural service areas separately from its rural area ETC designation requests, if such bifurcation would expedite Commission action on ALLTEL's ETC petitions as they relate to the non-rural service areas.

ALLTEL asserts that the Georgia Public Service Commission (Georgia Commission) does not regulate commercial mobile radio service providers for purposes of making determinations concerning eligibility for ETC designations and presents a letter from the Georgia Commission acknowledging its lack of such jurisdiction. Hence, according to ALLTEL, the Commission has jurisdiction under section 214(e)(6) to consider and grant its petition. ALLTEL also maintains that it satisfies all the statutory and regulatory prerequisites for ETC designation and that designating ALLTEL as an ETC in areas served by rural LECs will serve the public interest.

In accordance with section 54.207 of the Commission's rules, ALLTEL requests that the Commission designate ALLTEL as an ETC in a service area defined along boundaries that differ from the incumbent rural local exchange carriers' study area boundaries. The service area requested by ALLTEL for ETC designation partially covers the study areas of ALLTEL Georgia, Inc., ALLTEL Georgia Communications Corporation, Frontier Communications of Fairmont, Georgia ALLTEL Telcomm Inc., and Plant Telephone Company. ALLTEL requests a redefinition of these

rural service areas so each wire center in each of the respective study areas is designated as a separate service area. ALLTEL limits its redefinition request to those wire centers that ALLTEL serves in its entirety and notes that where ALLTEL serves only a portion of a wire center, it does not request ETC status for that wire center. ALLTEL maintains that the proposed redefinition of service areas for ETC purposes is consistent with the factors to be considered when redefining a rural telephone company service area, as enumerated by the Federal-State Joint Board on Universal Service. The Wireline Competition Bureau seeks comment on the ALLTEL Petition.

The petitioner must provide copies of its petition to the Georgia Commission. The Commission sent a copy of this Public Notice to the Georgia Commission by overnight express mail to ensure that the Georgia Commission is notified of the notice and comment period.

Pursuant to §§ 1.415 and 1.419 of the Commission's rules, 47 CFR 1.415, 1.419, interested parties may file comments as follows: comments are due on or before January 12, 2004, and reply comments are due on or before January 26, 2004. Comments may be filed using the Commission's Electronic Comment Filing System (ECFS) or by filing paper copies. *See Electronic filing of Documents in Rulemaking Proceedings,* 63 FR 24121, May 1, 1998.

Comments filed through the ECFS can be sent as an electronic file via the Internet to <*http://www.fcc.gov/e-file/ecfs.html*>. Generally, only one copy of an electronic submission must be filed. If multiple docket or rulemaking numbers appear in the caption of this proceeding, however, commenters must transmit one electronic copy of the comments to each docket or rulemaking number referenced in the caption. In completing the transmittal screen, commenters should include their full name, U.S. Postal Service mailing address, and the applicable docket or rulemaking number. Parties may also submit an electronic comment by Internet e-mail. To get filing instructions for e-mail comments, commenters should send an e-mail to *ecfs@fcc.gov,* and should include the following words in the body of the message, ''get form <your e-mail address>.'' A sample form and directions will be sent in reply.

Parties who choose to file by paper must file an original and four copies of each filing. If more than one docket or rulemaking number appears in the caption of this proceeding, commenters must submit two additional copies for each additional docket or rulemaking number. Filings can be sent by hand or messenger delivery, by commercial overnight courier, or by first-class or overnight U.S. Postal Service mail (although we continue to experience delays in receiving U.S. Postal Service mail). The Commission's contractor, Natek, Inc., will receive hand-delivered or messenger-delivered paper filings for the Commission's Secretary at 236 Massachusetts Avenue NE., Suite 110, Washington, DC 20002. The filing hours at this location are 8 a.m. to 7 p.m. All hand deliveries must be held together with rubber bands or fasteners. Any envelopes must be disposed of before entering the building. Commercial overnight mail (other than U.S. Postal Service Express Mail and Priority Mail) must be sent to 9300 East Hampton Drive, Capitol Heights, MD 20743. U.S. Postal Service first-class mail, Express Mail, and Priority Mail should be addressed to 445 12th Street SW., Washington, DC 20554. All filings must be sent to the Commission's Secretary, Marlene H. Dortch, Office of the Secretary, Federal Communications Commission, 445 12th Street SW., Washington, DC 20554.

Parties also must send three paper copies of their filing to Sheryl Todd, Telecommunications Access Policy Division, Wireline Competition Bureau, Federal Communications Commission, 445 12th Street SW., Room 5–B540, Washington, DC 20554. In addition, commenters must send diskette copies to the Commission's copy contractor, Qualex International, Portals II, 445 12th Street SW., Room CY–B402, Washington, DC 20054.

Pursuant to § 1.1206 of the Commission's rules, 47 CFR 1.1206, this proceeding will be conducted as a permit-but-disclose proceeding in which *ex parte* communications are permitted subject to disclosure.

Federal Communications Commission.

Sharon Webber,

Deputy Chief, Wireline Competition Bureau, Telecommunications Access Policy Division.

[FR Doc. 03–32117 Filed 12–30–03; 8:45 am]

BILLING CODE 6712–01–P

FEDERAL MARITIME COMMISSION

Notice of Agreements Filed

The Commission hereby gives notice of the filing of the following agreements under the Shipping Act of 1984. Interested parties can review or obtain copies of agreements at the Washington, DC offices of the Commission, 800 North Capitol Street, NW, Room 940. Interested parties may submit comments on an agreement to the Secretary, Federal Maritime Commission, Washington, DC 20573, within 10 days of the date this notice appears in the **Federal Register**.

Agreement No.: 011383–038.

Title: Venezuelan Discussion Agreement.

Parties: A.P. Moller-Maersk A/S, Hamburg-Süd KG, Seaboard Marine Ltd., King Ocean Service de Venezuela, and Seafreight Line.

Synopsis: The amendment updates Maersk's corporate name and deletes Hamburg-Süd's trade names.

Agreement No.: 011421–031.

Title: East Coast of South America Discussion Agreement.

Parties: Alianca Navegacao e Logistica Ltda.; A.P. Moller-Maersk A/S; Compania Sud Americana de Vapores, S.A.; Hamburg-Süd KG; APL Co. Pte Ltd.; Lykes Lines Limited, LLC; Mediterranean Shipping Company, S.A.; Evergreen Marine Corporation (Taiwan) Limited; Companhia Libra de Navegacao; Montemar Maritima, S.A.; CMA CGM, S.A.; P&O Nedlloyd B.V.; P&O Nedlloyd Limited; and Safmarine Container Lines, N.V.

Synopsis: The amendment updates Maersk's corporate name and deletes Hamburg-Süd's trade names.

Agreement No.: 011426–033.

Title: West Coast of South America Discussion Agreement.

Parties: A.P. Moller-Maersk A/S; Compania Chilena de Navigacion Interoceanica, S.A.; Compania Sud Americana de Vapores, S.A.; Hamburg-Süd KG; APL Co. Pte Ltd.; Seaboard Marine Ltd.; Trinity Shipping Line; Mediterranean Shipping Company, S.A.; P&O Nedlloyd B.V.; South Pacific Shipping Company, Ltd. (d/b/a Ecuadorian Line); and CMA CGM, S.A.

Synopsis: The amendment updates Maersk's corporate name and deletes Hamburg-Süd's trade names.

Agreement No.: 011550–009.

Title: ABC Discussion Agreement.

Parties: A.P. Moller-Maersk A/S, Hamburg-Süd KG, King Ocean Services Limited, and Seafreight Line.

Synopsis: The amendment updates Maersk's corporate name and deletes Hamburg-Süd's trade name.

Agreement No.: 011814–002.

Title: CAT/King Ocean Space Charter Agreement.

Parties: A.P. Moller-Maersk A/S; Hamburg-Süd KG; King Ocean Services Limited; and King Ocean Service de Venezuela, S.A.

Synopsis: The amendment updates Maersk's corporate name, deletes Hamburg-Süd's trade name, and changes internal references accordingly. It also corrects the address of King

Ocean, changes the name of the agreement, and restates the agreement.

Agreement No.: 201151.

Title: New Orleans/UMS France Road Terminal Lease Agreement.

Parties: Board of Commissioners of the Port of New Orleans Universal Maritime Service Corporation.

Synopsis: The agreement provides for the lease of certain facilities at the France Road Terminal and remains in effect through September 30, 2008.

By Order of the Federal Maritime Commission.

Dated: December 24, 2003.

Bryant L. VanBrakle,

Secretary.

[FR Doc. 03–32188 Filed 12–30–03; 8:45 am]

BILLING CODE 6730–01–P

FEDERAL RESERVE SYSTEM

Change in Bank Control Notices; Acquisition of Shares of Bank or Bank Holding Companies

The notificants listed below have applied under the Change in Bank Control Act (12 U.S.C. 1817(j)) and § 225.41 of the Board's Regulation Y (12 CFR 225.41) to acquire a bank or bank holding company. The factors that are considered in acting on the notices are set forth in paragraph 7 of the Act (12 U.S.C. 1817(j)(7)).

The notices are available for immediate inspection at the Federal Reserve Bank indicated. The notices also will be available for inspection at the office of the Board of Governors. Interested persons may express their views in writing to the Reserve Bank indicated for that notice or to the offices of the Board of Governors. Comments must be received not later than January 12, 2004.

A. Federal Reserve Bank of Minneapolis (Richard M. Todd, Vice President and Community Affairs Officer) 90 Hennepin Avenue, Minneapolis, Minnesota 55480-0291:

1. Ronald G. Chamberlin, Eitzen, Minnesota; to acquire voting shares of Eitzen Independents, Inc., Eitzen, Minnesota, and thereby indirectly acquire voting shares of Eitzen State Bank, Eitzen, Minnesota.

Board of Governors of the Federal Reserve System, December 23, 2003.

Jennifer J. Johnson,

Secretary of the Board.

[FR Doc. 03–32139 Filed 12–30–03; 8:45 am]

BILLING CODE 6210–01–S

FEDERAL RESERVE SYSTEM

Formations of, Acquisitions by, and Mergers of Bank Holding Companies

The companies listed in this notice have applied to the Board for approval, pursuant to the Bank Holding Company Act of 1956 (12 U.S.C. 1841 *et seq.*) (BHC Act), Regulation Y (12 CFR Part 225), and all other applicable statutes and regulations to become a bank holding company and/or to acquire the assets or the ownership of, control of, or the power to vote shares of a bank or bank holding company and all of the banks and nonbanking companies owned by the bank holding company, including the companies listed below.

The applications listed below, as well as other related filings required by the Board, are available for immediate inspection at the Federal Reserve Bank indicated. The application also will be available for inspection at the offices of the Board of Governors. Interested persons may express their views in writing on the standards enumerated in the BHC Act (12 U.S.C. 1842(c)). If the proposal also involves the acquisition of a nonbanking company, the review also includes whether the acquisition of the nonbanking company complies with the standards in section 4 of the BHC Act (12 U.S.C. 1843). Unless otherwise noted, nonbanking activities will be conducted throughout the United States. Additional information on all bank holding companies may be obtained from the National Information Center website at *www.ffiec.gov/nic/*.

Unless otherwise noted, comments regarding each of these applications must be received at the Reserve Bank indicated or the offices of the Board of Governors not later than January 19, 2003.

A. Federal Reserve Bank of Philadelphia (Michael E. Collins, Senior Vice President) 100 North 6th Street, Philadelphia, Pennsylvania 19105-1521:

1. Fulton Financial Corporation, Lancaster, Pennsylvania; to merge with Resource Bankshares Corporation, Virginia Beach, Virginia, and thereby indirectly acquire Resource Bank, Virginia Beach, Virginia.

Board of Governors of the Federal Reserve System, December 22, 2003.

Jennifer J. Johnson,

Secretary of the Board.

[FR Doc. 03–31995 Filed 12–30–03; 8:45 am]

BILLING CODE 6210–01–S

FEDERAL RESERVE SYSTEM

Formations of, Acquisitions by, and Mergers of Bank Holding Companies; Correction

This notice corrects a notice (FR Doc. 03-28720) published on page 65932 of the issue for Monday, November 24, 2003.

Under the Federal Reserve Bank of Richmond heading, the entry for Bank of America Corporation, Charlotte, North Carolina, is revised to read as follows:

A. Federal Reserve Bank of Richmond (A. Linwood Gill, III, Vice President) 701 East Byrd Street, Richmond, Virginia 23261-4528:

1. Bank of America Corporation, Charlotte, North Carolina; to merge with FleetBoston Financial Corporation, Boston, Massachusetts, and thereby indirectly acquire Fleet National Bank, Providence, Rhode Island, and Fleet Maine, National Association, South Portland, Maine.

In connection with this proposal, Bank of America has applied to acquire up to 19.9 percent of FleetBoston Financial Corporation, and FleetBoston Financial Corporation has an option to acquire 19.9 percent of the voting shares of Bank of America Corporation.

Comments on this application must be received by January 16, 2004.

Board of Governors of the Federal Reserve System, December 22, 2003.

Jennifer J. Johnson,

Secretary Secretary of the Board.

[FR Doc. 03–31997 Filed 12–30–03; 8:45 am]

BILLING CODE 6210–01–S

FEDERAL RESERVE SYSTEM

Formations of, Acquisitions by, and Mergers of Bank Holding Companies

The companies listed in this notice have applied to the Board for approval, pursuant to the Bank Holding Company Act of 1956 (12 U.S.C. 1841 *et seq.*) (BHC Act), Regulation Y (12 CFR Part 225), and all other applicable statutes and regulations to become a bank holding company and/or to acquire the assets or the ownership of, control of, or the power to vote shares of a bank or bank holding company and all of the banks and nonbanking companies owned by the bank holding company, including the companies listed below.

The applications listed below, as well as other related filings required by the Board, are available for immediate inspection at the Federal Reserve Bank indicated. The application also will be available for inspection at the offices of

the Board of Governors. Interested persons may express their views in writing on the standards enumerated in the BHC Act (12 U.S.C. 1842(c)). If the proposal also involves the acquisition of a nonbanking company, the review also includes whether the acquisition of the nonbanking company complies with the standards in section 4 of the BHC Act (12 U.S.C. 1843). Unless otherwise noted, nonbanking activities will be conducted throughout the United States. Additional information on all bank holding companies may be obtained from the National Information Center website at *www.ffiec.gov/nic/*.

Unless otherwise noted, comments regarding each of these applications must be received at the Reserve Bank indicated or the offices of the Board of Governors not later than January 5, 2004.

A. Federal Reserve Bank of Dallas (W. Arthur Tribble, Vice President) 2200 North Pearl Street, Dallas, Texas 75201-2272:

1. America Bank Holding Corporation, Corpus Chisti, Texas; to acquire 100 percent of the voting shares of First National Bank of Goliad, Golaid, Texas.

Board of Governors of the Federal Reserve System, December 22, 2003.

Jennifer J. Johnson,

Secretary of the Board.

[FR Doc. 03–31998 Filed 12–30–03; 8:45 am]

BILLING CODE 6210–01–S

FEDERAL RESERVE SYSTEM

Formations of, Acquisitions by, and Mergers of Bank Holding Companies

The companies listed in this notice have applied to the Board for approval, pursuant to the Bank Holding Company Act of 1956 (12 U.S.C. 1841 *et seq.*) (BHC Act), Regulation Y (12 CFR part 225), and all other applicable statutes and regulations to become a bank holding company and/or to acquire the assets or the ownership of, control of, or the power to vote shares of a bank or bank holding company and all of the banks and nonbanking companies owned by the bank holding company, including the companies listed below.

The applications listed below, as well as other related filings required by the Board, are available for immediate inspection at the Federal Reserve Bank indicated. The application also will be available for inspection at the offices of the Board of Governors. Interested persons may express their views in writing on the standards enumerated in the BHC Act (12 U.S.C. 1842(c)). If the proposal also involves the acquisition of a nonbanking company, the review also includes whether the acquisition of the nonbanking company complies with the standards in section 4 of the BHC Act (12 U.S.C. 1843). Unless otherwise noted, nonbanking activities will be conducted throughout the United States. Additional information on all bank holding companies may be obtained from the National Information Center website at *http://www.ffiec.gov/nic/*.

Unless otherwise noted, comments regarding each of these applications must be received at the Reserve Bank indicated or the offices of the Board of Governors not later than January 22, 2004.

A. Federal Reserve Bank of Dallas (W. Arthur Tribble, Vice President) 2200 North Pearl Street, Dallas, Texas 75201-2272:

1. Sulphur Springs Bancshares, Inc., Sulphur Springs, Texas, and Sulphur Springs Delaware Financial Corporation, Dover, Delaware; to acquire 100 percent of the voting shares of Hawkins Financial Corporation, Hawkins, Texas, and thereby indirectly acquire Hawkins Delaware Financial Corporation, Wilmington, Delaware, and First State Bank, Hawkins, Texas.

Board of Governors of the Federal Reserve System, December 23, 2003.

Jennifer J. Johnson,

Secretary of the Board.

[FR Doc. 03–32140 Filed 12–30–03; 8:45 am]

BILLING CODE 6210–01–S

FEDERAL RESERVE SYSTEM

Notice of Proposals to Engage in Permissible Nonbanking Activities or to Acquire Companies that are Engaged in Permissible Nonbanking Activities

The companies listed in this notice have given notice under section 4 of the Bank Holding Company Act (12 U.S.C. 1843) (BHC Act) and Regulation Y (12 CFR Part 225) to engage *de novo*, or to acquire or control voting securities or assets of a company, including the companies listed below, that engages either directly or through a subsidiary or other company, in a nonbanking activity that is listed in § 225.28 of Regulation Y (12 CFR 225.28) or that the Board has determined by Order to be closely related to banking and permissible for bank holding companies. Unless otherwise noted, these activities will be conducted throughout the United States.

Each notice is available for inspection at the Federal Reserve Bank indicated. The notice also will be available for inspection at the offices of the Board of Governors. Interested persons may express their views in writing on the question whether the proposal complies with the standards of section 4 of the BHC Act. Additional information on all bank holding companies may be obtained from the National Information Center website at *www.ffiec.gov/nic/*.

Unless otherwise noted, comments regarding the applications must be received at the Reserve Bank indicated or the offices of the Board of Governors not later than January 19, 2004.

A. Federal Reserve Bank of New York (Jay Bernstein, Bank Supervision Officer) 33 Liberty Street, New York, New York 10045-0001:

1. Bayerische Hypo-und Vereinsbank AG and Munchener Ruckversicherungs–Gesellschaft AG, both of Munich, Germany; to engage *de novo* through HVB Global Assets Company, L.P., in extending and servicing loans or other extensions of credit, pursuant to section 225.28(b)(1) of Regulation Y.

B. Federal Reserve Bank of Chicago (Patrick Wilder, Managing Examiner) 230 South LaSalle Street, Chicago, Illinois 60690-1414:

1. ICNB Financial Corporation, Ionia, Michigan; to engage *de novo* though Legacy Trust, Grand Rapids, Michigan, in trust company functions, pursuant to section 225.28(b)(5) of Regulation Y.

C. Federal Reserve Bank of Minneapolis (Richard M. Todd, Vice President and Community Affairs Officer) 90 Hennepin Avenue, Minneapolis, Minnesota 55480-0291:

1. Mountain West Financial Corp., Helena, Montana; to retain authority to engage in extending credit and servicing loans, pursuant to section 225.28(b)(1) of Regulation Y.

Board of Governors of the Federal Reserve System, December 22, 2003.

Jennifer J. Johnson,

Secretary of the Board.

[FR Doc.03–31994 Filed 12–30–03; 8:45 am]

BILLING CODE 6210–01–S

FEDERAL RESERVE SYSTEM

Notices of Proposals to Engage in Permissible Nonbanking Activities or to Acquire Companies that are Engaged in Permissible Nonbanking Activities; Correction

This notice corrects a notice (FR Doc. 03-30951) published on page 70015 of the issue for Tuesday, December 16, 2003.

Under the Federal Reserve Bank of Richmond heading, the entry for Southern Financial Bancorp, Inc., Warrenton, Virginia, is revised to read as follows:

A. Federal Reserve Bank of Richmond (A. Linwood Gill, III, Vice President) 701 East Byrd Street, Richmond, Virginia 23261-4528:

1. Southern Financial Bancorp., Inc., Warrenton, Virginia; to acquire 100 percent of the voting shares of Essex Bancorp, Inc., Norfolk, Virginia, and thereby indirectly acquire Essex Savings Bank, F.S.B., Norfolk, Virginia, and thereby engage in operating a savings association, pursuant to section 225.28(b)(4)(ii) of Regulation Y.

In connection with this application, Applicant also has applied to acquire 24.9 percent of the voting shares of LoanCare Servicing Center, Inc., Norfolk, Virginia, and thereby engage in extending credit and servicing loans, pursuant to section 225.28(b)(1) of Regulation Y, and in collection agency services, pursuant to section 225.28(b)(2)(iv) of Regulation Y.

Comments on this application must be received by January 9, 2004.

Board of Governors of the Federal Reserve System, December 22, 2003.

Jennifer J. Johnson,

Secretary of the Board.

[FR Doc. 03–31996 Filed 12–30–03; 8:45 am]

BILLING CODE 6210–01–S

FEDERAL RESERVE SYSTEM

Public Meeting: Application by Bank of America Corporation, Charlotte, North Carolina, To Merge with FleetBoston Financial Corporation, Boston, Massachusetts

AGENCY: Federal Reserve System

ACTION: Notice of Meeting.

SUMMARY: Two public meetings will be held regarding the notice submitted by Bank of America Corporation, Charlotte, North Carolina, to acquire FleetBoston Financial Corporation, Boston, Massachusetts (''FleetBoston''), and its banking and nonbanking subsidiaries pursuant to the Bank Holding Company Act (''BHC Act'') and related statutes. The purpose of the public meetings is to collect information relating to factors the Board is required to consider under the BHC Act.

DATES: The Boston meeting will be held on Wednesday, January 14, 2004, at 9:00 a.m. EST. The San Francisco meeting will be held on Friday, January 16, 2004, at 8:30 a.m. PST.

ADDRESSES: The public meeting in Boston, Massachusetts, will be held at the Federal Reserve Bank of Boston, 600 Atlantic Avenue, Boston, Massachusetts, and will begin at 9:00 a.m. EST. The public meeting in San Francisco, California, will be held at the Federal Reserve Bank of San Francisco, 101 Market Street, San Francisco, California, and will begin at 8:30 a.m. PST.

FOR FURTHER INFORMATION CONTACT: For the Boston meeting, contact Jonathan S. Fine, Assistant Vice President, Federal Reserve Bank of Boston, 600 Atlantic Avenue, Boston, Massachusetts. Facsimile: 617/973–3219. For the San Francisco meeting, contact Joy Hoffmann, Community Affairs Officer, Federal Reserve Bank of San Francisco, 101 Market Street, San Francisco, California 94120. Facsimile: 415/393–1920.

SUPPLEMENTARY INFORMATION: On November 14, 2003, Bank of America Corporation, Charlotte, North Carolina (''Bank of America''), requested the Board's approval under the Bank Holding Company Act (12 U.S.C. 1841 et seq.) (''BHC Act'') and related statutes to merge with FleetBoston. The General Counsel, acting pursuant to delegated authority, hereby orders that public meetings on the Bank of America/FleetBoston proposal be held in Boston, Massachusetts, and San Francisco, California.

Purpose and Procedures

The purpose of the public meetings is to collect information relating to factors the Board is required to consider under the BHC Act. These factors are (i) the effects of the proposal on the financial and managerial resources and future prospects of the companies and banks involved in the proposal, (2) competition in the relevant markets, and (3) the convenience and needs of the communities to be served. Convenience and needs considerations include a review of the records of performance of Bank of America and FleetBoston under the Community Reinvestment Act, which requires the Board to take into account in its review of a bank acquisition or merger proposal each institution's record of meeting the credit needs of its entire community, including low– and moderate–income neighborhoods, consistent with the safe and sound operation of the institution. 12 U.S.C. 2903.

Procedures for Hearing

Testimony at the public meeting will be presented to a panel consisting of a Presiding Officer and other panel members appointed by the Presiding Officer. In conducting the public meeting, the Presiding Officer will have the authority and discretion to ensure that the meeting proceeds in a fair and orderly manner. In contrast to a formal administrative hearing, the rules for taking evidence in an administrative proceeding will not apply to this public meeting. Panel members may question witnesses, but no cross–examination of witnesses will be permitted. The public meeting will be transcribed and information regarding procedures for obtaining a copy of the transcript will be announced at the public meeting.

On the basis of the requests received, the Presiding Officer will prepare a schedule for persons wishing to testify and establish the order of presentation. To ensure an opportunity for all interested commenters to present their views, the Presiding Officer may limit the time for presentation. Persons not listed on the schedule may be permitted to speak at the public meeting if time permits at the conclusion of the schedule of witnesses at the discretion of the Presiding Officer. Copies of testimony may, but need not, be filed with the Presiding Officer before a person's presentation.

Request to Testify

All persons wishing to testify at the public meeting to be held in Boston must submit a written request to Jonathan Fine, Assistant Vice President, Federal Reserve Bank of Boston, 600 Atlantic Avenue, Boston, Massachusetts 02106 (facsimile: 617/973–3219) not later than 8:00 p.m. EST, Wednesday, January 7, 2004. All persons wishing to testify at the public meeting to be held in San Francisco must submit a written request to Joy Hoffmann, Community Affairs Officer, Federal Reserve Bank of San Francisco, 101 Market Street, San Francisco, California 94120 (facsimile: 415/393–1920), not later than 5:00 p.m. PST, Wednesday, January 7, 2004. In the alternative, persons wishing to testify at either public meeting may submit a written request to Jennifer J. Johnson, Secretary of the Board of Governors of the Federal Reserve System 20th and C Streets, NW, Washington, DC 20551 (facsimile 202/452–3556) not later than 8:00 p.m. EST, Wednesday, January 7, 2004. The request must include the following information: (i) identification of which meeting the participant wishes to attend, (ii) a brief statement of the nature of the expected testimony (including whether the testimony will support or oppose the proposed transaction, or provide other comment on the proposal) and the estimated time required for the presentation; (iii) address and telephone number (e–mail address and facsimile number, if available) of the person testifying; and (iv) identification of any special needs, such as from persons desiring translation services, persons with a physical disability who may need

assistance, or persons requiring visual aids for their presentation. To the extent available, translators will be provided to persons wishing to present their views in a language other than English if this information is included in the request to testify. Persons interested only in attending the meeting, but not testifying, need not submit a written request to attend.

By order of the General Counsel, acting pursuant to delegated authority, effective December 22, 2003.

Jennifer J. Johnson,

Secretary of the Board.

[FR Doc. 03–31993 Filed 12–30–03; 8:45 am]

BILLING CODE 6210–01–S

DEPARTMENT OF HEALTH AND HUMAN SERVICES

Office of the Secretary

Secretary's Council on Public Health Preparedness; Notice of Meeting

Pursuant to Section 10(a) of the Federal Advisory Committee Act, as amended (5 U.S.C. Appendix 2), notice is given of a meeting of the Secretary's Council on Public Health Preparedness.

The purpose of this public meeting is to convene the Council to discuss issues related to preparing the nation to respond to public health emergencies in general and bioterrorism in particular. The Council may consider the following major issues: BioShield; Modeling Initiatives: Transport of Possibly Infected Exotic Animals; Global IT Monitoring; Public Health Preparedness Effort; State and Local Programs; R&D Initiatives.

Name of Committee: Secretary's Council on Public Health Preparedness.

Date: January 22–23, 2004.

Time: January 22—9 a.m.–6 p.m.; January 23—9 a.m.–3 p.m.

Place: Holiday Inn Capitol, 550 C Street, SW., Washington, DC 20024, Telephone: (202) 479–4006.

Contact Person: Dr. Judy Blumenthal, Executive Director, Secretary's Council on Public Health Preparedness, Office of the Assistant Secretary for Public Health Emergency Preparedness, 200 Independence Avenue, SW., Room 638G, Washington, DC 20201, 202–401–4848.

Supplementary Information: The Secretary's Council on Public Health Preparedness was established on October 22, 2001, by the Secretary of Health and Human Services under the authorization of Section 319 of the Public Health Service Act (42 U.S.C. § 247d); Section 222 of the Public Health Service Act (42 U.S.C. § 217a). The purpose of the Secretary's Council on Public Health Preparedness will be to advise the Secretary on appropriate actions to prepare for and respond to public health emergencies including acts of bioterrorism. The function of the Council is to advise the Secretary regarding steps that the U.S. Department of Health and Human Services can take to (1) Improve the public health and health care infrastructure to better enable Federal, State, and local governments to respond to a public health emergency and, specifically, a bio-terrorism event; (2) ensure that there are comprehensive contingency plans in place at the Federal, State, and local levels to respond to a public health emergency and, specifically, a bio-terrorism event; and (3) improve public health preparedness at the Federal, State, and local levels.

Public Participation

The meeting is open to the public with attendance limited by the availability of space on a first come, first served basis. Members of the public who wish to attend the meeting may register by e-mailing *sacphp@esi-dc.com <mailto:sacphp@esi-dc.com>* no later than close of business, January 15, 2004. All requests should include the name, address, telephone number, and business or professional affiliation of those registering.

Opportunities for oral statements by the public will be provided on Friday, January 23, 2004 at approximately 11:30 a.m. Oral comments will be limited to 5 minutes, 3 minutes to make a statement and 2 minutes to respond to questions from Council members. Due to time constraints, only one representative from each organization will be allotted time for oral testimony. The number of speakers and the time allotment may also be limited by the number of registrants. Members of the public who wish to present oral comments at the meeting may register by e-mailing [E T='03']sacphp@esi-dc.com[/E] <[E T='03']mailto:sacphp@esi-dc.com[/E]> no later than close of business, January 15, 2004. All requests to present oral comments should include the name, address, telephone number, and business or professional affiliation of the interested party, and should indicate the areas of interest or issue to be addressed.

Any person attending the meeting who has not registered to speak in advance of the meeting will be allowed to make a brief oral statement during the time set aside for public comment if time permits and at the Chairperson's discretion. Individuals unable to attend the meeting, or any interested parties, may send written comments by stamp mail or electronic mail to: ESI Attention: Janee Pelletier/SACPHP Meeting Comments; 7735 Old Georgetown Road, Suite 400; Bethesda, MD 20814; *sacphp@esi-dc.com <mailto:sacphp@esi-dc.com>*, phone 240–744–7026, for inclusion in the public record no later than close of business, January 15, 2004.

When mailing written comments, please provide your comments, if possible, as an electronic version or on a diskette. Persons needing special assistance, such as sign language interpretation or other special accommodations, should contact staff at the address and telephone number listed above no later than close of business, January 15, 2004.

Dated: December 23, 2003.

LaVerne Y. Stringfield,

Director, Office of Federal Advisory Committee Policy.

[FR Doc. 03–32122 Filed 12–30–03; 8:45 am]

BILLING CODE 4140–01–M

DEPARTMENT OF HEALTH AND HUMAN SERVICES

Centers for Disease Control and Prevention

[60 Day–04–18]

Proposed Data Collections Submitted for Public Comment and Recommendations

In compliance with the requirement of Section 3506(c)(2)(A) of the Paperwork Reduction Act of 1995 for opportunity for public comment on proposed data collection projects, the Centers for Disease Control and Prevention (CDC) will publish periodic summaries of proposed projects. To request more information on the proposed projects or to obtain a copy of the data collection plans and instruments, call the CDC Reports Clearance Officer on (404) 498–1210.

Comments are invited on: (a) Whether the proposed collection of information is necessary for the proper performance of the functions of the agency, including whether the information shall have practical utility; (b) the accuracy of the agency's estimate of the burden of the proposed collection of information; (c) ways to enhance the quality, utility, and clarity of the information to be collected; and (d) ways to minimize the burden of the collection of information on respondents, including through the use of automated collection techniques or other forms of information technology. Send comments to Anne O'Connor, CDC Assistant Reports Clearance Officer, 1600 Clifton Road, MS–E11, Atlanta, GA 30333. Written comments should be received within 60 days of this notice.

Proposed Project: National Ambulatory Medical Care Survey (NAMCS) 2005–2006 (OMB No. 0920–0234)—Extension—National Center for Health Statistics (NCHS), Centers for Disease Control and Prevention (CDC).

The National Ambulatory Medical Care Survey (NAMCS) was conducted annually from 1973 to 1981, again in 1985, and resumed as an annual survey in 1989. The survey is directed by CDC, National Center for Health Statistics, Division of Health Care Statistics. The purpose of NAMCS is to meet the needs and demands for statistical information about the provision of ambulatory

medical care services in the United States. Ambulatory services are rendered in a wide variety of settings, including physicians' offices and hospital outpatient and emergency departments. The NAMCS target population consists of all office visits made by ambulatory patients to non-Federal office-based physicians (excluding those in the specialties of anesthesiology, radiology, and pathology) who are engaged in direct patient care. To complement these data, NCHS initiated the National Hospital Ambulatory Medical Care Survey (NHAMCS, OMB No. 0920–0278) to provide data concerning patient visits to hospital outpatient and emergency departments.

The NAMCS provides a range of baseline data on the characteristics of the users and providers of ambulatory medical care. Data collected include the patients' demographic characteristics, reason(s) for visit, physicians' diagnosis, diagnostic services, medications and visit disposition. In addition to the annual statistics normally collected, a key focus of the 2005–2006 survey will be on the prevention and treatment of selected chronic conditions. These data, together with trend data, may be used to monitor the effects of change in the health care system, provide new insights into ambulatory medical care, and stimulate further research on the use, organization, and delivery of ambulatory care.

Users of NAMCS data include, but are not limited to, congressional and other federal government agencies, state and local governments, medical schools, schools of public health, researchers, administrators, and health planners. NAMCS plans to extend its data collection into 2005 and 2006. To calculate the burden hours the number of respondents for NAMCS is based on a sample of 3,000 physicians with a 50 percent participation rate (this includes physicians who are out-of-scope as well as those who refuse). There is no cost to respondents.

Respondents	Number of respondents	Number of responses/respondent	Average burden/response (in hrs)	Total burden hours
Office-based physicians:				
Induction Form	1,500	1	25/60	625
Patient Record Form	1,500	30	5/60	3,750
Total				4,375

Dated: December 19, 2003.

Ron Ergle,

Acting Director, Management Analysis and Services Office, Centers for Disease Control and Prevention.

[FR Doc. 03–32164 Filed 12–30–03; 8:45 am]

BILLING CODE 4163–18–P

DEPARTMENT OF HEALTH AND HUMAN SERVICES

Centers for Disease Control and Prevention

[30 Day–13–04]

Proposed Data Collections Submitted for Public Comment and Recommendations

The Centers for Disease Control and Prevention (CDC) publishes a list of information collection requests under review by the Office of Management and Budget (OMB) in compliance with the Paperwork Reduction Act (44 U.S.C. Chapter 35). To request a copy of these requests, call the CDC Reports Clearance Officer at (404) 498–1210. Send written comments to CDC, Desk Officer, Human Resources and Housing Branch, New Executive Office Building, Room 10235, Washington, DC 20503 or by fax to (202) 395–6974. Written comments should be received within 30 days of this notice.

Proposed Project: Housing and Health Study—New—National Center for HIV, STD, and TB Prevention (NCHSTP), Centers for Disease Control and Prevention (CDC). CDC is requesting OMB approval to conduct a study to examine the impact of providing housing for homeless or unstably housed people (people who are in temporary housing programs or doubled up with others) while living with HIV.

This project includes a unique collaboration with the Department of Housing and Urban Development (HUD). HUD is providing funding for housing vouchers for study participants. CDC will use the results of the data collection to inform policy makers about the types of housing and other affiliated services most likely to reduce HIV transmission and disease progression in the homeless population.

The population to be studied will be drawn from persons living with HIV/AIDS who are seeking housing services from three communities with unmet housing needs. These needs are evidenced by a waiting list for services, or other evidence of unmet housing need through the Housing Opportunities for Persons with AIDS (HOPWA) program. The project will be a longitudinal cohort study, following participants for 18 months. Participants will be randomized into two groups. One group will receive vouchers for housing subsidies plus a 2-session behavioral intervention; the other group will receive referral to housing resources through participating agencies and other agencies plus the 2-session behavioral intervention. No study participants will be denied access to other housing services that are available through participating agencies or other community resources.

Since, all participants receive the behavioral intervention, the study technically assesses the effects of housing over and above the behavioral intervention. A cost study will also be conducted to determine the resources needed for this approach and the cost benefits of providing housing for homeless and unstably housed people living with HIV. The purpose of the cost study is to evaluate the effects of housing affordability and the cost-effectiveness (*i.e.* cost-utility ratio) of this strategy relative to other interventions in other public health and other HIV prevention interventions.

Study participants will be surveyed at the beginning of the project (baseline) and at 6, 12, and 18 months after baseline. HUD site service providers will also be surveyed. Blood samples for CD4 and viral load counts will also be collected for all participants. The annualized burden for this data collection is 6,030 hours.

Respondents	Number of respondents	Responses per respondent	Average burden per response (in hours)
HOPWA Program Participants	1,000	4	1.5
HUD Site Service Providers	15	1	2

Dated: December 22, 2003.

Ron Ergle,

Director, Management Analysis and Services Office, Centers for Disease Control and Prevention.

[FR Doc. 03–32165 Filed 12–30–03; 8:45 am]

BILLING CODE 4163–18–P

DEPARTMENT OF HEALTH AND HUMAN SERVICES

Centers for Disease Control and Prevention

[60Day–04–19]

Proposed Data Collections Submitted for Public Comment and Recommendations

In compliance with the requirement of Section 3506(c)(2)(A) of the Paperwork Reduction Act of 1995 for opportunity for public comment on proposed data collection projects, the Centers for Disease Control and Prevention (CDC) will publish periodic summaries of proposed projects. To request more information on the proposed projects or to obtain a copy of the data collection plans and instruments, call the CDC Reports Clearance Officer on (404) 498–1210.

Comments are invited on: (a) Whether the proposed collection of information is necessary for the proper performance of the functions of the agency, including whether the information shall have practical utility; (b) the accuracy of the agency's estimate of the burden of the proposed collection of information; (c) ways to enhance the quality, utility, and clarity of the information to be collected; and (d) ways to minimize the burden of the collection of information on respondents, including through the use of automated collection techniques or other forms of information technology. Send comments to Anne O'Connor, CDC Assistant Reports Clearance Officer, 1600 Clifton Road, MS–E11, Atlanta, GA 30333. Written comments should be received within 60 days of this notice.

Proposed Project: HIV/AIDS Prevention and Surveillance Project Reports, OMB No. 0920–0208—Extension—National Center for HIV, STD and TB Prevention (NCHSTP), Centers for Disease Control and Prevention (CDC).

CDC is requesting to extend the use of the currently approved form, OMB No. 0920–0208, for collecting HIV counseling, testing, and referral (CTR) program data. This current form expires March 30, 2004. This request is for an 18-month clearance past this date. Extension of the current form will allow grantees to continue to collect CTR data as they transition to the new set of CTR variables and the new program evaluation and monitoring system (PEMS). Over the next year, grantees will either transition to the new variables once they have reprogrammed their existing computer systems, or as the CDC-provided PEMS is made available. CDC funds cooperative agreements for 65 HIV prevention projects (50 states, 6 cities, 7 territories, Washington, DC, and Puerto Rico) and approximately 50 community based organizations to support HIV counseling, testing, and referral programs.

HIV counseling, testing, and referral services in STD clinics, women's health centers, drug treatment centers, and other health facilities have been described as a primary prevention strategy of the national HIV prevention program. The funded public health departments and community based organizations have increased the provision of HIV counseling, testing, and referral activities to those at increased risk for acquiring or transmitting HIV, as well as minority communities and women of child bearing age.

CDC is responsible for monitoring and evaluating HIV prevention programs conducted under HIV prevention cooperative agreements. HIV counseling, testing, and referral services are a vital component of HIV prevention programs. Without data to monitor and evaluate the impact of HIV counseling, testing, and referral programs, HIV prevention program priorities cannot be assessed and improved to prevent further spread of the epidemic. CDC needs minimal core data from all grantees describing CTR services provided for at-risk persons. Until grantees are prepared for collecting the new CTR variables and reporting data electronically through PEMS, it is essential that they be allowed to continue to collect the current CTR data using the existing forms.

Completing the initial data submission will take approximately 5 minutes per form. Approximately two (2) million records annually are expected from over 11,000 directly and indirectly funded grantee facilities. The total estimated burden is 167,000 hours annually. This is the estimated burden if no one transitions to the new system during the year, but it is expected that many of the grantees will transition to PEMS in phases throughout the year. Following this notice, a separate data collection for PEMS will be submitted for public comment and will include the revised CTR data variables and associated burden estimate. There is no cost to respondents.

Respondents	Number of respondents	Number of responses/respondent	Average burden/response (in hours)	Total burden (in hours)
Directly or Indirectly Funded Facilities	11,000	182	5/60	167,000
Total				167,000

Dated: December 22, 2003.

Ron Ergle,

Acting Director, Management Analysis and Services Office, Centers for Disease Control and Prevention.

[FR Doc. 03–32166 Filed 12–30–03; 8:45 am]

BILLING CODE 4163–18–P

DEPARTMENT OF HEALTH AND HUMAN SERVICES

Administration for Children and Families

[ACYF/HS–2003–01]

Request for Public Comments on the Proposed Merger of Two Head Start Grantees in Rhode Island

AGENCY: Administration on Children, Youth, and Families, ACF, DHHS.

ACTION: Request for public comments.

SUMMARY: This notice is to solicit public comments and statements of interest from interested parties on the merger of two Rhode Island Head Start Programs.

EFFECTIVE DATE: January 30, 2004.

FOR FURTHER INFORMATION CONTACT: Michelle Hastings; Pal-Tech, Inc.; 1000 Wilson Blvd., Suite 1000; Arlington, VA 22209; 1–800–458–7699; 703–243–0496 (fax)

SUPPLEMENTARY INFORMATION: Self Help, Inc., and New Visions for Newport County, Inc. are proposing to merge their federally funded Head Start programs. This proposed merger is expected to bring about a more cost effective and efficient service delivery to children and their families. The Head Start Bureau of the Administration for Children and Families (ACF), within the United States Department of Health And Human Services has this proposal under consideration and is currently evaluating its effect on Head Start Services for children and families in the community. Under the proposed merger, Self Help, Inc., would be absorbed by New Visions for Newport County, Inc., and New Visions for Newport County, Inc. would provide Head Start services for the community it now serves as well as the community new served by Self Help, Ins.

Mergers of local Head Start grantees usually require the ACF to offer an open competition in the specified service area whose grantee is being absorbed. While this request for a merger, without a competitive review process, is under consideration, public comments are being solicited. Additionally, this notice also serves to encourage and welcome statements of interest from any local public agency, local public school system, local non-profit agency or local for-profit organization, or local faith-based organization that would want to compete for funding to provide Head Start services in the area now served by Self Help, Inc.

Self Help, Inc., also receives funding to conduct an Early Head Start program. As part of a proposed merger, Self Help, Inc., is proposing that the Early Head Start grant it conducts be transferred to New Visions for Newport County, Inc. after the merger. When an Early Head Start grantee merges with another organization, the grant must usually be recompeted, but consideration is being given to transferring the Early Head Start grant to New Visions for Newport County, Inc. While this request for a transfer, without a recompetition, is under consideration, public comments are being solicited. Additionally, this notice also serves to encourage and welcome statements of interest from any public agency, public school system, non-profit agency, for-profit organization, or faith-based organization that would want to compete for funding to provide Early Head Start services in the area now served by Self Help, Inc.

Please mail or fax statements of support or objection to this proposed merger and grant transfer as well as any request for consideration by January 30, 2004 to: Michelle Hastings; Pal-Tech, Inc.; 1000 Wilson Blvd., Suite 1000; Arlington, VA 22209; 1–800–458–7699; 703–243–0496 (fax).

Dated: December 22, 2003.

Joan E. Ohl,

Commissioner, Administration on Children, Youth and Families.

[FR Doc. 03–32151 Filed 12–30–03; 8:45 am]

BILLING CODE 4184–01–M

DEPARTMENT OF HEALTH AND HUMAN SERVICES

Administration for Children and Families

Statement of Organization, Functions, and Delegations of Authority

This notice amends Part K of the Statement of Organization, Functions, and Delegations of Authority of the Department of Health and Human Services (DHHS), Administration for Children and Families (ACF) as follows: Chapter KB, the Children's Bureau, Administration on Children, Youth and Families (ACYF) (66 FR 30215–18), as last amended June 5, 2001. This notice moves the Data Team from the Division of Data, Research and Innovation, Children's Bureau to the Office of the Associate Commissioner, Children's Bureau and renames the Division.

This Chapter is amended as follows:

1. Chapter KB, Administration on Children, Youth and Families.

A. Delete KB.10 Organization in its entirety and replace with the following:

KB.10 Organization. The Administration on Children, Youth and Families is headed by a Commissioner, who reports directly to the Assistant Secretary for Children and Families and consists of:

- Office of the Commissioner (KBA)
- Office of Management Services (KBA1)
- Head Start Bureau (KBC)
- Program Operations Division (KBC1)
- Program Support Division (KBC2)
- Program Management Division (KBC3)
- Children's Bureau (KBD)
- Office of Child Abuse and Neglect (KBD1)
- Division of Policy (KBD2)
- Division of Program Implementation (KBD3)
- Division of Research and Innovation (KBD4)
- Division of Child Welfare Capacity Building (KBD5)
- Division of State Systems (KBD6)
- Family and Youth Services Bureau (KBE)
- Child Care Bureau (KBG)
- Immediate Office/Administration (KBG1)
- Program Operations Division (KBG2)
- Policy Division (KBG3)
- Technical Assistance Division (KBG4)

B. Delete KB.20 Functions, Paragraph D introductory material, in its entirety and replace with the following:

D. The Children's Bureau is headed by an Associate Commissioner who advises the Commissioner, Administration on Children, Youth and Families, on matters related to child welfare, including child abuse and neglect, child protective services, family preservation and support, adoption, foster care and independent living. It recommends legislative and budgetary proposals, operational planning system objectives and initiatives, and projects and issue areas for evaluation, research and demonstration activities. It represents ACYF in initiating and implementing interagency activities and projects affecting children and families, and provides leadership and coordination for the programs, activities, and subordinate components of the Bureau. It is responsible for the Data and Technology Team which

analyzes and disseminates program data from the Adoption and Foster Care Analysis and Reporting System (AFCARS), and the National Child Abuse and Neglect Data System (NCANDS); develops systematic methods of measuring the impact and effectiveness of various child welfare programs; performs statistical sampling functions; provides comprehensive guidance to States, local agencies and others on data collection issues, and performance outcome measures; and is the focal point for technology development within the Bureau.

C. Delete KB.20 Functions, Paragraph D.4, in its entirety and replace with the following:

4. The Division of Research and Innovation provides leadership and direction in program development, innovation, research and in the management of the Bureau's information systems under titles IV–B and IV–E of the Social Security Act, and under the Child Abuse Prevention and Treatment Act. It defines critical issues for investigation and makes recommendations regarding subject areas for research, demonstration and evaluation. It administers the Bureau's discretionary grant programs, and awards project grants to State and local agencies and organizations nationwide. It provides direction to the Crisis Nurseries and Abandoned Infants Resource Centers.

Dated: December 9, 2003.

Wade F. Horn,

Assistant Secretary for Children and Families.

[FR Doc. 03–31374 Filed 12–30–03; 8:45 am]

BILLING CODE 4184–01–P

DEPARTMENT OF HEALTH AND HUMAN SERVICES

Food and Drug Administration

[Docket No. 2003N–0268]

Agency Information Collection Activities; Submission for Office of Management and Budget Review; Comment Request; Biological Products: Reporting of Biological Product Deviations in Manufacturing

AGENCY: Food and Drug Administration, HHS.

ACTION: Notice.

SUMMARY: The Food and Drug Administration (FDA) is announcing that a proposed collection of information has been submitted to the Office of Management and Budget (OMB) for review and clearance under the Paperwork Reduction Act of 1995.

DATES: Fax written comments on the collection of information by January 30, 2004.

ADDRESSES: OMB is still experiencing significant delays in the regular mail, including first class and express mail, and messenger deliveries are not being accepted. To ensure that comments on the information collection are received, OMB recommends that written comments be faxed to the Office of Information and Regulatory Affairs, OMB, Attn: Fumie Yokota, Desk Officer for FDA, FAX: 202–395–6974.

FOR FURTHER INFORMATION CONTACT: JonnaLynn P. Capezzuto, Office of Management Programs (HFA–250), Food and Drug Administration, 5600 Fishers Lane, Rockville, MD 20857, 301–827–4659.

SUPPLEMENTARY INFORMATION: In compliance with 44 U.S.C. 3507, FDA has submitted the following proposed collection of information to OMB for review and clearance.

Biological Products: Reporting of Biological Product Deviations in Manufacturing—(OMB Control Number 0910–0458)—Extension

Under section 351 of the Public Health Service Act (42 U.S.C. 262), all biological products, including human blood and blood components, offered for sale in interstate commerce must be licensed and meet standards designed to ensure the continued safety, purity, and potency of such products. In addition, section 501 of the Federal Food, Drug, and Cosmetic Act (the act) (21 U.S.C. 351) provides that drugs and devices (including human blood and blood components) are adulterated if they do not conform with current good manufacturing practice (CGMP) assuring that they meet the requirements of the act. All establishments manufacturing human blood and blood components are required to register with FDA, and comply with the CGMP regulations for human blood and blood components (parts 211 and 606 (21 CFR parts 211 and 606)). Transfusion services are required under 42 CFR 493.1273(a) to comply with part 606 and 21 CFR part 640 as they pertain to the performance of manufacturing activities. FDA regards biological product deviation reporting to be an essential tool in its directive to protect public health by establishing and maintaining surveillance programs that provide timely and useful information. Section 600.14 (21 CFR 600.14) requires the licensed manufacturer who holds the biological product license, for other than human blood and blood components, and who had control over the product when the deviation occurred, to report to the Center for Biologics Evaluation and Research (CBER) as soon as possible but not to exceed 45 calendar days after acquiring information reasonably suggesting that a reportable event has occurred. Section 606.171 requires a licensed manufacturer of human blood and blood components, including Source Plasma; an unlicensed registered blood establishment; or a transfusion service who had control over the product when the deviation occurred, to report to CBER as soon as possible but not to exceed 45 calendar days after acquiring information reasonably suggesting that a reportable event has occurred. Respondents to this collection of information are the licensed manufacturers of biological products other than human blood and blood components, unlicensed registered blood establishments, and transfusion services. Based on information from CBER's databases for fiscal year (FY) 2002, there were 115 licensed manufacturers of biological products other than human blood and blood components, 207 licensed manufacturers of human blood and blood components, including Source Plasma, and 2,800 unlicensed registered blood establishments and 3,221 transfusion services. However, not all manufacturers or establishments may have any submissions in a given year and some may have multiple submissions. In the same FY, CBER's database also showed that the licensed manufacturers of biological products other than human blood and blood components submitted 476 biological product deviation reports (BPDRs) under § 600.14, the licensed manufacturers of human blood and blood components, including Source Plasma submitted 27,000 BPDRs under § 606.171, and the unlicensed registered blood establishments and transfusion services submitted a total of 6,446 BPDRs. The number of total annual responses is based on the number of BPDRs CBER received in FY 2002. The rate of submission is not expected to change significantly in the next few years. Based on information from industry, the estimated average time to complete a deviation report is 2 hours. The availability of the standardized report FDA Form 3486, and the ability to submit this report electronically further streamlines the report submission process. Activities such as investigating, changing standard operating procedures (SOPs) or processes, and followup are currently required under parts 211 (approved under OMB control numbers 0910–0139

and 0910–0353), 606 (approved under OMB control number 0910–0116), and 820 (21 CFR part 820) (approved under OMB control number 0910–0073) and, therefore, are not included in the burden calculation for the separate requirement of submitting a deviation report to FDA.

In the **Federal Register** of June 30, 2003 (68 FR 38712), FDA published a 60-day notice requesting public comment on the information collection provisions. We received two comments.

In response to whether the proposed collection of information is necessary, comment one stated that we should harmonize the biological product deviation reporting requirements (§ 600.14) with the NDA field alert reports under 21 CFR 314.81(b)(1) and, therefore, revoke § 600.14. The comment stated the adoption of the new drug application (NDA) field alert regulations for all biologics would streamline compliance activities, and facilitate and align the recent transfer of biotechnology products from CBER to the Center for Drug Evaluation and Research (CDER). The comment also stated that revocation of § 600.14 would reduce the reporting burden while continuing to support the industry in making good, risk based quality decisions.

The NDA field alert regulations (approved under OMB control number 0910–0001) are applicable only to those products that are approved for marketing under the provisions of part 314 (21 CFR part 314) (including those few products that CBER regulates even though they were approved under the NDA provisions of part 314). The NDA field alert regulations do not apply to biological drug products subject to licensing under the Public Health Service (PHS) Act, including licensed products that CDER now regulates. FDA has harmonized a number of regulations for certain biotechnology products where products regulated as biological products subject to licensure are similar to products subject to regulation as new drugs (see 65 FR 66621 at 66625, November 7, 2000). The products recently transferred from CBER to CDER are still regulated as biological products under the PHS Act. However, we recently stated in our CBER Web site that the biological product deviation reports for those transferred products are now to be sent to CDER. CBER will continue to monitor and assess its biological product deviation reporting program. If the level of reporting or the needs of the agency change, FDA will consider whether to harmonize its reporting requirements. The comment's suggestion that FDA adopt the NDA field alert regulations in § 314.81(b)(1) and revoke § 600.14 seeks a regulatory change that is outside the scope of FDA's current request for OMB renewal of the information collection in the existing regulations. Consequently, we decline to adopt the comment's recommendations.

Comment two, in response to the necessity of the proposed regulation, recommended revisions to the regulation regarding the submission of reports regarding post-donation information, and argued that only a small percentage of those reports were forwarded to District Offices for further investigation and that the reporting burden has resulted in little tangible outcome. FDA uses those reports for reasons other than initiating further investigation or product recalls. For example, some reports of post-donation information revealed to FDA that the manufacturers had flaws in their donor screening procedures, which FDA communicated to the companies. In addition, information from biological product deviation reports has been valuable to FDA in crafting guidances for industry that improve product quality and reduce manufacturing problems generally. However, we will continue to monitor and assess our biological product deviation reporting program, including the review of these type of reports. Consequently, we decline to adopt the comment's recommendations at this time.

In response to FDA's burden estimate, comment one questioned the estimated hours per response to submit a report to FDA and stated that FDA's estimate did not factor in the time to completely process the report. The comment provided an estimation of burden hours to submit a report 10 times FDA's estimate. In addition, the comment stated that additional time is required to update SOPs associated with the regulation and to perform ongoing training.

Based on comments received in response to the burden hours published in the proposed rule of September 23, 1997 (62 FR 49642), FDA revised the burden hours (hours per response) in the final rule (65 FR 66621 at 66632, November 7, 2000) to the current estimate. In response to the comments on the proposed rule, we stated the revised estimate was based in part on information from industry representatives about typical procedures, and the availability of a standardized report form. Activities such as investigating, changing SOPs or processes, and followup are required under parts 211, 606, and 820, and therefore, are not included in the burden estimate for the separate requirement of submitting to FDA a biological product deviation report. In the final rule, we estimated the hours as a one-time burden, in part, for establishing and making adjustments to SOPs and staff training. Continuance of these activities would be considered as part of normal business practice or covered by other regulations. We, therefore, decline to revise the burden hours.

Comment two questioned FDA's estimate that the rate of submissions was not expected to change significantly in the next few years. The comment stated that there was a large increase in the number of reports from the previous year.

We realize that the number of reports increased in the first couple of years after issuance of the final rule as industry adjusted to the new reporting requirements. However, we expect the numbers of reports to level off after this adjustment period, and therefore, we estimate that the rate of submission will not significantly increase in the next few years. If the number of reports significantly increases unexpectedly in the next few years, we will adjust the estimates at the next interval for approval of the information collection. Consequently, we decline to revise the estimates at this time.

In response to ways of minimizing the collection burden, comment one stated that we should notify manufacturers when a report is submitted that is not deemed to meet the threshold for reporting. The comment also stated that firms are not comfortable with filing submissions electronically because there are inadequate safeguards to ensure against false reports.

For reports submitted electronically, we notify the manufacturer of those reports that do not meet the threshold for reporting. For those submitted in hard copy, we notify the manufacturer if a trend of a particular type of unnecessary report is detected. We currently have an approximate rate of 45 percent of reports submitted electronically with the majority being submitted by the blood industry. Because the system is designed with a user name and password that is associated with the establishment, we believe there are adequate safeguards for submitting the information electronically.

Comment two responded to ways of minimizing the collection burden by recommending that post-donation information be reported in summary format not to exceed annually. Although, as mentioned previously, FDA has made valuable use of

promptly-reported post-donation information, we will continue to monitor and assess our biological product deviation reporting program and make adjustments accordingly.

FDA estimates the burden of this collection of information as follows:

TABLE 1.—ESTIMATED ANNUAL REPORTING BURDEN[1]

21 CFR Section	Form No.	No. of Respondents	Annual Frequency per Response	Total Annual Responses	Hours per Response	Total Hours
600.14	3,486	115	4.1	476	2	952
606.171[2]	3,486	207	130.4	27,000	2	54,000
606.171[3]	3,486	6,021	1.1	6,446	2	12,892
Total						67,844

[1] There are no capital costs or operating and maintenance costs associated with this collection of information.
[2] Licensed manufacturers of human blood and blood components, including Source Plasma.
[3] Unlicensed registered blood establishments and transfusion services (2,800 + 3,221 = 6,021).

Dated: December 16, 2003.

Jeffrey Shuren,

Assistant Commissioner for Policy.

[FR Doc. 03–32160 Filed 12–30–03; 8:45 am]

BILLING CODE 4160–01–S

DEPARTMENT OF HEALTH AND HUMAN SERVICES

Food and Drug Administration

Advisory Committees; Tentative Schedule of Meetings for 2004

AGENCY: Food and Drug Administration, HHS.

ACTION: Notice.

SUMMARY: The Food and Drug Administration (FDA) is announcing a tentative schedule of forthcoming meetings of its public advisory committees for 2004. During 1991, at the request of the Commissioner of Food and Drugs (the Commissioner), the Institute of Medicine (IOM) conducted a study of the use of FDA's advisory committees. In its final report, one of IOM's recommendations was for the agency to publish an annual tentative schedule of its meetings in the **Federal Register**. This publication implements IOM's recommendation.

FOR FURTHER INFORMATION CONTACT: Theresa L. Green, Advisory Committee Oversight and Management Staff (HF–4), Food and Drug Administration, 5600 Fishers Lane, Rockville, MD 20857, 301–827–1220.

SUPPLEMENTARY INFORMATION: IOM, at the request of the Commissioner, undertook a study of the use of FDA's advisory committees. In its final report in 1992, one of IOM's recommendations was for FDA to adopt a policy of publishing an advance yearly schedule of its upcoming public advisory committee meetings in the **Federal Register**. FDA has implemented this recommendation. The annual publication of tentatively scheduled advisory committee meetings will provide both advisory committee members and the public with the opportunity, in advance, to schedule attendance at FDA's upcoming advisory committee meetings. Because the schedule is tentative, amendments to this notice will not be published in the **Federal Register**. However, changes to the schedule will be posted on FDA's advisory committees' Internet site located at *http://www.fda.gov/oc/advisory/default.htm*. FDA will continue to publish a **Federal Register** notice 15 days in advance of each upcoming advisory committee meeting, to announce the meeting (21 CFR 14.20).

The following list announces FDA's tentatively scheduled advisory committee meetings for 2004. You may also obtain up-to-date meeting information by calling the Advisory Committee Information Line, 1–800–741–8138 (301–443–0572 in the Washington, DC area).

Committee Name	Date(s) of Meetings	Advisory Committee 10-Digit Information Line Code
OFFICE OF THE COMMISSIONER		
Science Board to the Food and Drug Administration	April 22, November 4	3014512603
CENTER FOR BIOLOGICS EVALUATION AND RESEARCH		
Allergenic Products Advisory Committee	April 2	3014512388
Biological Response Modifiers Advisory Committee	March 18–19, July 15–16, November 18–19	3014512389
Blood Products Advisory Committee	March 18–19, July 12–13, October 21–22	3014519516
Transmissible Spongiform Encephalopathies Advisory Committee	February 12–13, June 29–30, October 14–15	3014512392

Committee Name	Date(s) of Meetings	Advisory Committee 10-Digit Information Line Code
Vaccines and Related Biological Products Advisory Committee	February 18–19, May 6–7, September 22–23, November 17–18	3014512391
CENTER FOR DRUG EVALUATION AND RESEARCH		
Anesthetic and Life Support Drugs Advisory Committee	March 24–25, June 9–10, August 10–11, November 17–18	3014512529
Anti-Infective Drugs Advisory Committee	February 2—Joint Meeting with Pediatric Subcommittee and Psychopharmacologic Drugs Advisory Committee, February 3–4—Pediatric Subcommittee	3014512530
Antiviral Drugs Advisory Committee	April 27–28, October 27–28	3014512531
Arthritis Advisory Committee	May 12–13, July 14–15, October 21–22	3014512532
Cardiovascular and Drugs Health Advisory Committee	May 6–7, July 16, August 5–6	3014512533
Dermatologic and Ophthalmic Drugs Advisory Committee	February 26–27—Joint Meeting with Drug Safety and Risk Management Advisory Committee, April 1–2, May 6–7, June 24–25, August 26–27, September 9–10	3014512534
Drug Safety and Risk Management Advisory Committee	February 26–27—Joint Meeting with Dermatologic and Ophthalmic Drugs Advisory Committee, April 22–23, June 3–4, September 9–10, November 4–5	3014512535
Endocrinologic and Metabolic Drugs Advisory Committee	February 26–27, April 22–23, June 22–23, September 23	3014512536
Gastrointestinal Drugs Advisory Committee	To Be Announced	3014512538
Nonprescription Drugs Advisory Committee	March–Day To Be Announced June–Day To Be Announced December 16—Joint Meeting with Advisory Committee for Reproductive Health Drugs	3014512541
Oncologic Drugs Advisory Committee	March 16–17, June 15–16	3014512542
Peripheral and Central Nervous System Drugs	To Be Announced	3014512543
Pharmaceutical Science, Advisory Committee for	April 13–14	3014512539
Psychopharmacologic Drugs Advisory Committee	February 2—Joint Meeting with Anti-Infective Drugs Advisory Committee and Pediatric Subcommittee	3014512544
Pulmonary-Allergy Drugs Advisory Committee	June 29–30, November 4–5	3014512545
Reproductive Health Drugs, Advisory Committee for	October—Day To Be Announced, December—Day To Be Announced	3014512537
CENTER FOR DEVICES AND RADIOLOGICAL HEALTH		
Device Good Manufacturing Practice Advisory Committee	September 9–10	3014512398

Committee Name	Date(s) of Meetings	Advisory Committee 10-Digit Information Line Code
Medical Devices Advisory Committee (Comprised of 18 Panels)		
Anesthesiology and Respiratory Therapy Devices Panel	March 25–26, June 17–18, September 9–10, November 15–16	3014512624
Circulatory Systems Panel	March 17–18, May 19–20, July 21–22, September 22–23, November 17–18	3014512625
Clinical Chemistry and Clinical Toxicology Devices Panel	March 30–31, June 24–25, September 16–17, December 6–7	3014512514
Dental Products Panel	April 14–15	3014512518
Ear, Nose, and Throat Devices Panel	April 21–22, June 15–16, August 30–31, October 6–7, December 1–2	3014512522
Gastroenterology-Urology Devices Panel	April 30, July 16, October 22	3014512523
General and Plastic Surgery Devices Panel	March 11–12, May 26–27, August 9–10, October 18–19	3014512519
General Hospital and Personal Use Devices Panel	April 6–7, July 12–13, October 18–19	3014512520
Hematology and Pathology Devices Panel	April 23, October 22	3014512515
Immunology Devices Panel	February 26, April 23, October 22	3014512516
Medical Devices Dispute Resolution Panel	To Be Announced as Needed	3014510232
Microbiology Devices Panel	April 8–9, July 29–30, November 9–10	3014512517
Molecular and Clinical Genetics Panel	April 28–29, July 19–20, October 20–21	3014510231
Neurological Devices Panel	February 23, April 1–2, August 5–6, October 28–29	3014512513
Obstetrics and Gynecology Devices Panel	April 26–27, July 26–27, October 25–26	3014512524
Ophthalmic Devices Panel	February 5–6, March 4–5, May 13–14, July 8–9, September 22–23, November 4–5	3014512396
Orthopaedic and Rehabilitation Devices Panel	March 22–23, June 3–4, August 12–13, December 2–3	3014512521
Radiological Devices Panel	February 3, May 18, August 10, November 16	3014512526
National Mammography Quality Assurance Advisory Committee	April 5	3014512397
Technical Electronic Product Radiation Safety Standards Committee	None	3014512399
CENTER FOR FOOD SAFETY AND APPLIED NUTRITION		
Food Advisory Committee—Full Committee and Subcommittee	August 16–17	3014510564
Additives and Ingredients Subcommittee	May 26–27	3014510564
Biotechnology Subcommittee	July 21–22	3014510564
Contaminants and Natural Toxicants Subcommittee	November 16–17	3014510564

Committee Name	Date(s) of Meetings	Advisory Committee 10-Digit Information Line Code
Dietary Supplements Subcommittee	September 14–15	3014510564
Infant Formula	June 22–23	3014510564
Nutrition Subcommittee	March 30–31	3014510564
CENTER FOR VETERINARY MEDICINE		
Veterinary Medicine Advisory Committee	September 23–24	3014512548
NATIONAL CENTER FOR TOXICOLOGICAL RESEARCH		
Science Advisory Board to National Center for Toxicological Research	August 11	3014512559
Advisory Committee on Special Studies Relating to the Possible Long-Term Health Effects of Herbicides and Contaminants	January 21, April 12, August 3, October 26	3014512560

Dated: December 23, 2003.

Peter J. Pitts,

Associate Commissioner for External Relations.

[FR Doc. 03–32103 Filed 12–30–03; 8:45 am]

BILLING CODE 4160–01–S

DEPARTMENT OF HEALTH AND HUMAN SERVICES

Food and Drug Administration

Biological Response Modifiers Advisory Committee; Notice of Meeting

AGENCY: Food and Drug Administration, HHS.

ACTION: Notice.

This notice announces a forthcoming meeting of a public advisory committee of the Food and Drug Administration (FDA). The meeting will be open to the public.

Name of Committee: Biological Response Modifiers Advisory Committee.

General Function of the Committee: To provide advice and recommendations to the agency on FDA's regulatory issues.

Date and Time: The meeting will be held on March 18, 2004, from approximately 8:30 a.m. and 5 p.m.; and on March 19, 2004, from approximately 8:30 a.m. to 3 p.m.

Location: Hilton Hotel, 8727 Colesville Rd., Silver Spring, MD.

Contact Person: Gail Dapolito or Rosanna Harvey, Center for Biologics Evaluation and Research (HFM–71), Food and Drug Administration, 1401 Rockville Pike, Rockville, MD 20852, 301–827–3014, e-mail *dapolito@cber.fda.gov*, or FDA Advisory Committee Information Line, 1–800–741–8138 (301–443–0572 in the Washington, DC area), code 3014512389. Please call the Information Line for up-to-date information on this meeting.

Agenda: On March 18 and 19, 2004, the committee will discuss issues related to the design of early phase clinical trials of cellular therapies for the treatment of cardiac diseases.

Procedure: Interested persons may present data, information, or views, orally or in writing, on issues pending before the committee. Written submissions may be made to the contact person by March 11, 2004. Oral presentations from the public will be scheduled on March 18, 2004, between approximately 4:30 p.m. and 5 p.m.; and on March 19, 2004, between approximately 9:50 a.m. and 10:20 a.m. Time allotted for each presentation may be limited. Those desiring to make formal oral presentations should notify the contact person before March 11, 2004, and submit a brief statement of the general nature of the evidence or arguments they wish to present, the names and addresses of proposed participants, and an indication of the approximate time requested to make their presentation.

Persons attending FDA's advisory committee meetings are advised that the agency is not responsible for providing access to electrical outlets.

FDA welcomes the attendance of the public at its advisory committee meetings and will make every effort to accommodate persons with physical disabilities or special needs. If you require special accommodations due to a disability, please contact Gail Dapolito at least 7 days in advance of the meeting.

Notice of this meeting is given under the Federal Advisory Committee Act (5 U.S.C. app. 2).

Dated: December 22, 2003.

Peter J. Pitts,

Assoicate Commissioner for External Relations.

[FR Doc. 03–32242 Filed 12–30–03; 8:45 am]

BILLING CODE 4160–01–S

DEPARTMENT OF HEALTH AND HUMAN SERVICES

Food and Drug Administration

[FDA 225–04–8004]

Memorandum of Understanding Between the Food and Drug Administration, Department of Health and Human Services of the United States of America and Swissmedic of the Swiss Confederation Regarding Exchange of Information About Pharmaceutical Products for Human and Animal Use and Medical Devices

AGENCY: Food and Drug Administration, HHS.

ACTION: Notice.

SUMMARY: The Food and Drug Administration (FDA) is providing notice of a memorandum of understanding (MOU) between the Food and Drug Administration, Department of Health and Human Services of the United States of America and Swissmedic of the Swiss Confederation. The purpose of this MOU is to further enhance and strengthen communication and existing public health promotion and protection cooperative activities related to the regulation of human or animal pharmaceutical products and human medical devices in Switzerland and the United States of America.

DATES: The agreement became effective September 22, 2003.

FOR FURTHER INFORMATION CONTACT: Naomi Kawin, Office of International

Programs (HFG–1), Food and Drug Administration, 5600 Fishers Lane, Rockville, MD 20857, 301–827–0590.

SUPPLEMENTARY INFORMATION: In accordance with 21 CFR 20.108(c), which states that all written agreements and MOUs between FDA and others shall be published in the **Federal Register**, the agency is publishing notice of this MOU.

Dated: December 18, 2003.

Jeffrey Shuren,

Assistant Commissioner for Policy.

BILLING CODE 4160–01–S

MEMORANDUM OF UNDERSTANDING

BETWEEN THE
FOOD AND DRUG ADMINISTRATION
DEPARTMENT OF HEALTH AND HUMAN SERVICES
OF THE UNITED STATES OF AMERICA

AND

SWISSMEDIC
OF THE SWISS CONFEDERATION

REGARDING
EXCHANGE OF INFORMATION ABOUT PHARMACEUTICAL PRODUCTS FOR HUMAN AND ANIMAL USE, AND MEDICAL DEVICES

PREAMBLE

The Food and Drug Administration (FDA), of the United States Department of Health and Human Services (HHS) and Swissmedic (collectively "the Participants") recognize the importance of timely communication between U.S. and Swiss governmental authorities. These communications are especially important on matters relating to the safety, quality, and efficacy of: (a) pharmaceutical products for human use (including active pharmaceutical ingredients and finished dosage products and biological products, such as vaccines and blood products); (b) pharmaceutical products for animal use (not including biological products for animals because FDA/HHS and Swissmedic do not have oversight authority for such products in the United States of America or Switzerland respectively); and (c) medical devices for human use. The Participants share a mutual high regard for the critical role of one another's regulatory systems in the review and approval of these products for marketing. To that end, the Participants to this Memorandum of Understanding (MOU) intend to establish mechanisms by which the exchange of documents and/or information between staffs during the review and evaluation of investigational and marketing applications and the post-marketing surveillance of these products would be facilitated as agreed to by the Participants.

I. PURPOSE

This MOU is intended to further enhance and strengthen communication and existing public health promotion and protection cooperative activities related to the regulation of human or animal pharmaceutical products and human medical devices in Switzerland and the United States of America.

II. SCOPE

The products covered under this MOU include (as defined in the Preamble): pharmaceutical products for human use; pharmaceutical products for animal use; and, medical devices. The Participants intend to develop specific procedures for the exchange of regulatory (including enforcement) and public health information related to these products. The types of information that may be shared include, but are not limited to, the following:

A. Drafts of pending laws, regulations, guidance documents, procedures, and other technical documents available to the individual Participants that are related to such pharmaceutical and medical device products.

B. Post-marketing data and information that could have an impact on the public health, such as pharmacovigilance data or information about impending regulatory actions.

C. Information on quality defects or product recalls of human or animal pharmaceutical products or medical devices known by the FDA/HHS to have been manufactured or distributed in Switzerland, and products known by Swissmedic to have been manufactured or distributed in the United States of America.

D. Information contained in or related to marketing or investigational applications for human or animal pharmaceutical products or medical devices, including the various discipline reviews. This also includes information on maximum residue levels of animal drugs in tissues of animals intended for human consumption.

E. Inspection reports and product sample test results such as those describing the conformity of a human or animal pharmaceutical product or medical device, or a facility that manufactures these products, with applicable regulatory requirements.

F. Information on facilities registered or authorised in each Participant's country that then market product to the other Participant' s country.

G. Information related to import refusals for reasons related to the safety, quality, or integrity of the shipment.

Such information shall not be used for purposes other than those envisaged by this MOU.

III. CONFIDENTIALITY

Information exchanged under this MOU may include non-public information exempt from public disclosure under the laws and regulations of Switzerland or the United States of America. Information that is not appropriate for public dissemination will be shared according to the procedures and policies of the Participants as permitted by their respective laws. FDA/HHS and Swissmedic are not able to share trade secret information without the consent of the owner of the information. With regard to any other types of non-public information that may be provided to Swissmedic by FDA/HHS or to FDA/HHS by Swissmedic, such transmissions will be made in accordance with the specific signed confidentiality commitments and other requirements of the Participants.

The personnel of the agencies shall be required, even after their duties have ceased, not to disclose non-public information acquired under this MOU, including information which is of the kind covered by the obligation of professional secrecy in Switzerland and information and activities covered by 18 U.S.C. § 207 in the United States of America.

IV. SOURCE OF FUNDING

Each Participant to this MOU intends to fund its own activities subject to the availability of appropriated funds, personnel, and other resources. Any exchange of information or other activity under this MOU is to be performed in accordance with applicable laws and regulations.

V. DURATION

Cooperation under this MOU commences upon signature of the Participants and continues in effect for a period of ten (10) years unless modified by mutual consent of the Participants or terminated earlier by either Participant upon a 30 calendar-day written notification to the other Participant.

After the first year of operation, the Participants may jointly evaluate the MOU. Periodic reviews may be conducted as deemed necessary by the Participants. The MOU may be extended for additional 10-year periods, with periodic reviews as needed and agreed to by the Participants.

This MOU does not modify existing cooperative activities nor does it preclude entering into separate arrangements for special programs that can be handled more efficiently and expeditiously by special arrangements.

Nothing in this MOU is intended to diminish or otherwise affect the authority of either Participant to conduct its regulatory responsibilities and programs. In addition, no provision of this MOU restricts either Participant from conducting its own inspection of a pharmaceutical or medical device manufacturing facility within the jurisdictional boundaries of the other country when needed to meet the needs of its own pharmaceutical or medical device regulatory program.

Signed in New York, in duplicate, this twenty-second day of September 2003, in the English language.

FOR THE U.S. DEPARTMENT OF HEALTH AND HUMAN SERVICES

TITLE: The Secretary

FOR THE SWISS AGENCY FOR THERAPEUTIC PRODUCTS, SWISSMEDIC, OF THE SWISS CONFEDERATION

TITLE: President of the Swiss Confederation and
Chief Executive of the Department of Home Affairs (EDI)

[FR Doc. 03–32006 Filed 12–30–03; 8:45 am]
BILLING CODE 4160–01–C

DEPARTMENT OF HEALTH AND HUMAN SERVICES

Food and Drug Administration

[FDA 225–04–8003]

Memorandum of Understanding Between the Food and Drug Administration and the Health Products and Food Branch, Health Canada of Canada Regarding Sharing and Exchange of Information about Therapeutic Products

AGENCY: Food and Drug Administration, HHS.

ACTION: Notice.

SUMMARY: The Food and Drug Administration is providing notice of a memorandum of understanding (MOU) between the Food and Drug Administration (FDA), Department of Health and Human Services of the United States of America and the Health Products and Food Branch, Health Canada of Canada. The purpose of this MOU is to enhance and strengthen the exchange of information and existing public health protection cooperative activities related to the regulation of the specified therapeutic products.

DATES: The agreement became effective November 18, 2003.

FOR FURTHER INFORMATION CONTACT: Beverly Corey, Office of International Programs (HFG–1), Food and Drug Administration, 5600 Fishers Lane, Rockville, MD 20857, 301–827–0855.

SUPPLEMENTARY INFORMATION: In accordance with 21 CFR 20.108(c), which states that all written agreements and MOUs between FDA and others shall be published in the **Federal Register**, the agency is publishing notice of this MOU.

Dated: December 17, 2003.

Jeffrey Shuren,

Assistant Commissioner for Policy.

BILLING CODE 4160–01–S

MEMORANDUM OF UNDERSTANDING

BETWEEN THE
FOOD AND DRUG ADMINISTRATION
DEPARTMENT OF HEALTH AND HUMAN SERVICES
OF THE UNITED STATES OF AMERICA

AND THE
HEALTH PRODUCTS AND FOOD BRANCH
HEALTH CANADA
OF CANADA

REGARDING SHARING AND
EXCHANGE OF INFORMATION ABOUT THERAPEUTIC PRODUCTS

PREAMBLE

The Food and Drug Administration (USFDA), Department of Health and Human Services of the United States of America and the Health Products and Food Branch (HPFB), Health Canada of Canada (collectively "the Participants") recognize the importance of timely and effective communication and collaboration between U.S. and Canadian governmental authorities. These communications are especially important on matters relating to the safety, quality, and efficacy of therapeutic products. Therapeutic products are defined as: pharmaceutical products for human and animal use (including active pharmaceutical ingredients, finished dosages and radiopharmaceutical products); biological products for human use (including gene, cell, blood, tissue, and organ therapies and products intended for transplantation or transfusion; vaccines; xenografts); and medical devices for human and animal use. The Participants share a mutual high regard for the critical role of one another's regulatory systems in the review and approval of these products. To that end, the Participants to this Memorandum of Understanding (MOU) intend to establish mechanisms by which the sharing and exchange of documents and/or information between staffs relating to the review and evaluation of investigational and marketing applications, establishment compliance, and post-marketing surveillance of these products would be facilitated as decided to by the Participants.

I. PURPOSE

This MOU is intended to enhance and strengthen the exchange of information and existing public health protection cooperative activities related to the regulation of the specified therapeutic products.

II. SCOPE

As defined in the Preamble, this MOU covers therapeutic products. The Participants intend to develop specific procedures for the sharing and exchange of regulatory, emergency management, and public health information related to these products. The types of information that may be shared include, but are not limited to, the following:

A. Drafts of pending laws, regulations, guidance documents, policies, procedures, and other technical documents available to the individual Participants that are related to such therapeutic products for which the Participants have responsibility.

B. Post-marketing data and information that could have an impact on the public health, such as pharmacovigilance data or information about impending regulatory actions including proposed market withdrawals and product recalls.

C. Information on quality defects or product recalls of therapeutic products known by the USFDA to have been manufactured or distributed in Canada, and products known by Canada HPFB to have been manufactured or distributed in the United States.

D. Information contained in clinical trials or related to marketing or investigational applications for therapeutic products, including the various discipline reviews. This also includes information on maximum residue levels of animal drugs in tissues of animals intended for human consumption.

E. Information related to orphan drug designations.

F. Inspection reports and product sample test results such as those describing the conformity of therapeutic products, or of a facility that manufactures, distributes, wholesales, tests, or imports these products, with applicable regulatory requirements.

G. Information on facilities registered or authorized in each Participant's country that then market product to the other Participant's country, including facilities that only export their products.

H. Information related to import refusals for reasons related to the safety, quality, or integrity of the shipment.

I. Information on activities that feature major public involvement.

J. Information on technology (e.g. information systems, database systems, and other related computer applications) that support the evaluation/review of the safety, quality, and efficacy of therapeutic products.

K. Information related to enforcement activities and product investigations. An area to be looked at in this regard relates to cross-border issues, including internet pharmacies, finished pharmaceutical controlled substances and counterfeit drugs.

Such information should not be used for purposes other than those envisaged by this MOU.

III. CONFIDENTIALITY

Information exchanged under this MOU may include non-public information exempt from public disclosure under the laws and regulations of the United States and Canada. Information that is not appropriate for public dissemination is only to be shared according to the procedures and policies of the Participants as permitted by these respective laws. Neither the USFDA nor Canada HPFB may divulge trade secret information without the consent of the owner. With regard to any non-public information that may be provided to Canada HPFB by USFDA or to the USFDA by Canada HPFB, such transmissions are to be made in accordance with the specific signed confidentiality commitments and other requirements of the Participants.

IV. SOURCE OF FUNDING

Each Participant to this MOU recognizes the other's responsibility to fund and carry out its own activities subject to, and to the extent made possible, by the availability of appropriated funds, personnel, and other resources. Any sharing or exchange of information or other activity under this MOU is to be performed in accordance with applicable laws and regulations.

V. DURATION AND PROCESS

Cooperation under this MOU commences upon signature of the Participants and continues in effect for a period of ten (10) years. After an initial period of operation of one year, the Participants intend to jointly review the MOU and make adjustments as necessary.

The MOU may be modified by mutual consent of the Participants or terminated earlier by either Participant upon a 30-day written notification to the other Participant. The MOU may be extended for additional 10-year periods, with periodic reviews as needed and as decided by the Participants in the interim.

The Participants should establish a mechanism for regular bilateral meetings for the development of plans for joint work.

This MOU does not modify existing cooperative activities nor does it preclude entering into separate arrangements for special programs that can be handled more efficiently and expeditiously by special arrangements.

Nothing in this MOU is intended to diminish or otherwise affect the authority of either Participant to carry out its regulatory responsibilities and programs. In addition, no provision of this MOU restricts either Participant from conducting its own inspection of a therapeutic product manufacturing facility within the jurisdictional boundaries of the other country when needed to meet the needs of its own regulatory programs.

Signed at Ottawa, Canada on this eighteenth day of November 2003 in duplicate in the English language.

FOR THE FOOD AND DRUG ADMINISTRATION
DEPARTMENT OF HEALTH AND HUMAN SERVICES
OF THE UNITED STATES OF AMERICA

Mark B. McClellan, M.D., Ph.D.
Commissioner of Food and Drugs

FOR THE HEALTH PRODUCTS AND FOOD BRANCH
HEALTH CANADA
OF CANADA

Diane C. Gorman,
Assistant Deputy Minister

[FR Doc. 03–32104 Filed 12–30–03; 8:45 am]
BILLING CODE 4160–01–C

DEPARTMENT OF HEALTH AND HUMAN SERVICES

Food and Drug Administration

[Docket No. 2003N–0539]

Over-the-Counter Drug Products; Safety and Efficacy Review

AGENCY: Food and Drug Administration, HHS

ACTION: Request for data and information.

SUMMARY: The Food and Drug Administration (FDA) is announcing a call for data for certain categories of ingredients in over-the-counter (OTC) drug products that are eligible for the original OTC drug review but have not been reviewed by FDA to date. FDA will review the submitted data and information as part of its ongoing review of OTC drug products to determine whether these ingredients and products are generally recognized as safe and effective (GRAS/E) for their labeled uses. This document also requests the

identification of other categories of OTC drug products that were in the marketplace when the OTC drug review began on May 11, 1972, or that were marketed before December 4, 1975, and describes FDA's general regulatory policy governing the marketing of these OTC drug products during the pendency of this review.

DATES: Submit data, information, and general comments by June 28, 2004.

ADDRESSES: Submit data and information directly to the Division of OTC Drug Products (HFD–560), Center for Drug Evaluation and Research, Food and Drug Administration, 5600 Fishers Lane, Rockville, MD 20857. Submit general comments in writing to the Division of Dockets Management (HFA–305), 5630 Fishers Lane, rm. 1061, Rockville, MD 20852 or electronically to *http://www.fda.gov/dockets/ecomments*.

FOR FURTHER INFORMATION CONTACT: Michael T. Benson or Gerald M. Rachanow, Center for Drug Evaluation and Research (HFD–560), Food and Drug Administration, 5600 Fishers Lane, Rockville, MD 20857, 301–827–2222.

SUPPLEMENTARY INFORMATION:

I. Background

In 1972, FDA established the OTC drug review to evaluate currently marketed OTC drug products. The final regulations in part 330 (21 CFR part 330) providing for the OTC drug review under 21 CFR 130.301 (recodified as § 330.10) were published and made effective in the **Federal Register** of May 11, 1972 (37 FR 9464). Since that time, FDA has published various calls for data inviting interested parties to submit data and information for the advisory review panels to review.[1] During the course of the OTC drug review, advisory review panels reviewed many of the categories of OTC drug products included in prior call-for-data notices but did not review every category because of resource limitations.[2] Table 1 of this document lists the categories of OTC drug products reviewed by all 17 panels and FDA and several categories of products that were reviewed by FDA only.

TABLE 1.—CATEGORIES OF OTC DRUG PRODUCTS REVIEWED BY 17 PANELS AND/OR FDA

AcneAlcohol
Anorectal
Antacid
Anthelmintic
Anticaries
Antidiarrheal
Antiemetic
Antiflatulent
Antifungal:
  Diaper Rash
  Nails and Scalp
Antimicrobial:
  Alcohols (topical)
  Antiseptics (First aid)
  Antiseptics (Health Care)
  Diaper Rash
  Mercurials
Antiperspirant
Aphrodisiac
Benign Prostatic Hypertrophy
Boil Treatment
Camphorated Oil
Category II/III Ingredients (Phase I)
Category II/III Ingredients (Phase II)
Category II/III Ingredients (Additional)
Cholecystokinetic
Corn/Callus Remover
Cold/Cough:
  Anticholinergic
  Antihistamine
  Antitussive
  Bronchodilator
  Expectorant
  Nasal Decongestant
Dandruff/Seborrhea/Psoriasis
Daytime Sedative
Deodorant (Internal)
Digestive Aid
Exocrine Pancreatic Insufficiency
External Analgesic:
  Diaper Rash
  Fever Blister/Cold Sore
  Insect Bites/Stings
  Male Genital Desensitizer
  Poison Ivy/Oak/Sumac
Fever Blister/Cold Sore (Internal)
Hair Grower/Loss
Hexachlorophene
Hormone (topical)
Hypo/Hyperphosphatemia
Ingrown Toenail Relief
Insect Repellent (Internal)
Internal Analgesic:
  Leg Muscle Cramps
  Malaria
  Overindulgence
Laxative
Menstrual
Nailbiting/Thumbsucking Deterrent
Nighttime Sleep-aid
Ophthalmic
Oral Health Care:
  Antiseptic
  Non-Antimicrobial
  Oral Discomfort (Relief)
  Oral Mucosal Injury

TABLE 1.—CATEGORIES OF OTC DRUG PRODUCTS REVIEWED BY 17 PANELS AND/OR FDA—Continued

  Oral Wound Healing
  Plaque
Otic:
  Drying Water-Clogged Ears
  Earwax Removal
  Swimmer's Ear
Overindulgence Remedies:
  Prevent Inebriation
Pediculicide
Poison Treatment:
  Acute Toxic Ingestion Treatment
  Emetic
Salicylanilides (Tribromsalan)
Silver
Skin Bleaching
Skin Protectant:
  Astringent
  Diaper Rash
  Fever Blister/Cold Sore
  Insect Bites/Stings
  Poison Ivy/Oak/Sumac
Smoking Deterrent
Stimulant
Stomach Acidifier
Sunscreen
Sweet Spirits of Nitre
Vaginal Contraceptive
Vaginal Drug Products
Vitamin/Mineral
Wart Remover
Weight Control
Zirconium (Aerosol)

II. The Current Request for Data and Information

To complete the OTC drug review, FDA is publishing this call-for-data notice on the following categories of ingredients: (1) Nasal moisturizer drug products, (2) urinary analgesic/antiseptic drug products, (3) urinary acidifiers and alkalinizers, (4) aloe vera and urea, (5) wrinkle remover products, and (6) lubricants and vaginal moisturizers. The categories of OTC drugs in this notice include some of the categories from the 1973 and 1975 notices that were not reviewed and several other categories that the agency has identified that were never reviewed. These include urinary analgesics/antiseptics and saline nasal products. Interested parties who identify other categories of OTC drug products that were in the marketplace when the OTC drug review began on May 11, 1972, or that were marketed before December 4, 1975 (see § 330.13), should submit comments regarding this document to the agency about those categories of OTC drug products, including the active ingredients in the products and the uses for which the products were marketed. Product labels should be provided if available.

[1] See 38 FR 31696, November 16, 1973, and 40 FR 38179, August 27, 1975.

[2] FDA also identified several categories of marketed OTC drug products that were not reviewed by the advisory panels and publish subsequent call-for-data notices for those product categories. In the **Federal Register** of December 5, 1989 (54 FR 50240), FDA published a request for data and information on ingredients in eyewash drug products used for emergency first aid treatment of chemical burns of the eyes. FDA publshed a proposed rule for those products in the **Federal Register** of September 19, 1990 (55 FR 38560), FDA published a request for data and information on ingredients contained in products bearing antiplaque and antiplaque-related claims. The Dental Products Panel completed its review of the data and information that were submitted, and FDA published the panel's report in the **Federal Register** of May 29, 2003 (68 FR 32232).

A. Nasal Moisturizer Drug Products

The agency considers nasal moisturizer products[3] to be drugs when they contain the following or similar ingredients: Sodium chloride, normal saline, buffered isotonic saline solution, saline phosphate buffer solution, glycerin. A number of these nasal moisturizer products have been marketed for several years with various labeling claims. Such claims include the following statements:

•''provides soothing moisture to dry, inflamed nasal membranes due to colds, allergies, low humidity, and other minor nasal irritations''

•''restores vital moisture to provide prompt relief for dry, crusted, and inflamed nasal membranes due to chronic sinusitis, colds, low humidity, overuse of nasal decongestant drops and sprays, allergies, minor nose bleeds, and other minor nasal irritations''

•''use for dry nasal membranes caused by chronic sinusitis, allergy, asthma, dry air, oxygen therapy''

•''rhinitis medicamentosa, rhinitis sicca, and atrophic rhinitis for patients 'hooked on nose drops' and glaucoma patients on diuretics having dry nasal capillaries''

•''a nasal moisturizer formulated to be physiologically compatible with nasal membranes, providing soothing relief for clogged nasal passages without stinging or burning''

•''restores moisture to relieve dry, inflamed nasal membranes due to low humidity, colds, allergies, and overuse of nasal decongestants''.

FDA currently desires additional data on which to make a determination as to the safety, effectiveness, and labeling of these products. There may be other labeling statements or formulations of the products that are marketed as OTC nasal moisturizers. FDA considers many of these claims to be drug claims and believes these products should be regulated under the monograph for OTC cough-cold or miscellaneous internal drug products. Therefore, FDA requests that interested persons who have data and information on the safety and effectiveness of nasal moisturizer products submit them to FDA at this time.

[3]In its report on OTC cold, cough, allergy, bronchodilator, and antiasthmatic drug products (published in the **Federal Register** of September 9, 1976 (41 FR 38312)), the panel that reviewed these products classified saline phosphate buffer solution as an inactive ingredient or pharmaceutical necessity, and did not classify it as a nasal moisturizer. The panel did not review and evaluate products used as nasal moisturizers, and these products were not reviewed and evaluated in the various tentative final and final monographs under the rulemaking for OTC cold, cough, allergy, bronchodilator, and antiasthmatic drug products.

B. Urinary Analgesic/Antiseptic Drug Products

FDA is also aware that products marketed as urinary analgesics/antiseptics and products for too frequent, burning, and painful urination have been marketed for a number of years, but have not yet been evaluated as part of the OTC drug review.[4] Other products marketed for these uses for a number of years contain methylene blue and phenazopyridine hydrochloride (HCl).

Phenazopyridine HCl has had a dual prescription/OTC marketing status based on the ingredient's extensive marketing history in the United States that predates the 1951 Durham-Humphrey Amendments to the Federal Food, Drug, and Cosmetic Act (the act). FDA reviewed phenazopyridine HCl/sulfonamide combination products under the Drug Efficacy Study Implementation (DESI 12056) for the treatment of urinary tract infections caused by a sulfonamide-susceptible organism when relief of symptoms of pain, burning, or urgency is needed. None of the single-entity phenazopyridine HCl drugs marketed at that time or now have been the subject of an approved new drug application (NDA).

In the **Federal Register** of July 29, 1983 (48 FR 34516), FDA published a DESI notice containing conditions for approval and marketing of phenazopyridine-containing drug products (single entities or fixed combinations). The notice announced certain required labeling statements for phenazopyridine-containing drug products indicated for use in relieving symptoms associated with a urinary tract infection, and certain required labeling for all phenazopyridine-containing drug products. FDA recommended the following labeling requirements for phenazopyridine-containing drug products (single entities or fixed combinations) for use in the treatment of urinary tract infections:

1. The following information shall be disclosed in the INDICATION section (adapted to the labeling of particular drug products): Treatment of a urinary tract infection with phenazopyridine HCl or a combination drug product containing phenazopyridine HCl should not exceed 2 days because there is lack of evidence that the combined administration of phenazopyridine HCl and an antibacterial provides greater benefit than administration of the antibacterial alone after 2 days.

2. The part of the INDICATION section pertaining to the use of the product in urinary tract infections shall also refer to the DOSAGE and ADMINISTRATION section.

3. In its dosage and dosing interval recommendations pertaining to the use of the product in urinary tract infections, the DOSAGE and ADMINISTRATION section shall show that the product is only indicated for up to 2 days (the effect of phenazopyridine HCl should not be relied upon after 48 hours).

The DESI notice also contained the following labeling requirement for all drug products containing phenazopyridine:

The following statement shall be included in the CARCENOGENESIS subsection of the PRECAUTION section of the labeling:

Long-term administration of phenazopyridine hydrochloride has induced neoplasia in rats (large intestine) and mice (liver). Although no association between phenazopyridine hydrochloride and human neoplasia has been reported, adequate epidemiological studies along these lines have not been conducted.

This information came from a National Cancer Institute technical report (Ref. 1). FDA is not aware of any epidemiological studies that have been done since the report was published in 1978.

The 1983 DESI notice states that the product considered (Azo Gantanol) contained 500 milligrams (mg) of sulfamethoxazole (antibacterial component) and 100 mg of phenazopyridine HCl (analgesic component) per tablet, and this combination is effective only for the first 48-hour treatment period (four tablets initially followed by two tablets every 12 hours, with the last dose administered at 36 hours). There is no evidence that the phenazopyridine HCl component has a beneficial effect on symptoms beyond 48 hours. Therefore, after initial treatment with the combination product, further treatment should be continued only with the sulfonamide.

The way the labeling information appeared in the notice indicated that 200 mg of phenazopyridine was the prescription dose. Products containing lesser amounts (e.g., 190 or 195 mg) have been marketed OTC. The recommended dosage is three times a day after meals. OTC drug products containing phenazopyridine HCl as a urinary analgesic are usually labeled: ''Can be used up to 3 times daily for 2 days maximum.'' One product surveyed (Ref. 2) does not contain the required

[4]A product containing methenamine, sodium salicylate, salicylamide, and benzoic acid was submitted in response to the 1973 and 1975 call-for-data notices mentioned previously, but has not been reviewed to date. This submission is out-of-date and needs to be updated before the agency begins its review of these products.

carcinogenesis statement on the outer package labeling but does have the statement in a package insert included inside the package.

FDA issued a Compliance Policy Guide on October 1, 1980 (Ref. 3), revised on May 22, 1987 (Ref. 3), that addressed urinary tract preparations containing phenazopyridine HCl. FDA advised that it was not taking regulatory action against products containing this ingredient and lackingand lacking a prescription legend or full-disclosure labeling [based on their deferral to the OTC drug review].

FDA has a number of questions and issues that it plans to consider when it evaluates phenazopyridine HCl for urinary tract analgesic/antiseptic use as part of this review.

1. Is this condition appropriate for self medication?

2. If the answer to the first question is yes, should the product labeling mention the possible need for treatment with an antibacterial drug also?

3. Is there a valid basis for having single-ingredient prescription products with a 200 mg dosage and OTC products with a 190 to 195 mg dosage? What data support these dosages?

4. Have any epidemiological studies been done since 1978 that address the neoplasia findings in the National Cancer Institute technical report (Ref. 1)?

5. Are the neoplasia findings of sufficient concern to restrict this drug to prescription status?

6. Do consumers adequately understand the required carcinogenesis labeling statement? If the answer is no, how should this statement be revised?

7. Should the carcinogenesis labeling statement be required to appear on the outer package labeling, or is it adequate that it appear only in a package insert?

8. Provide updated safety data both from the literature and from adverse event reports for the last 20 years, especially those adverse events reported to companies that market these products.

FDA invites parties interested in the OTC status of this ingredient to submit their answers to these questions and any supporting data to the Division of Dockets Management as comments to this notice so that this information will be publicly available when FDA reviews this ingredient. Adverse event reports should not include names or telephone numbers.

C. Urinary Acidifiers and Alkalinizers

FDA is also aware of OTC drug products that have been marketed as urinary acidifiers and urinary alkalinizers. Ammonium chloride and ascorbic acid have been used as OTC urinary acidifiers, and sodium bicarbonate has been used as an OTC urinary alkalinizer. These products have not been included in any previous call-for-data notices as part of the OTC drug review. Therefore, at this time FDA invites interested persons to submit data or information on these and any other ingredients for use as OTC urinary acidifiers and alkalinizers.

D. Aloe Vera and Urea

Aloe vera has been present in a variety of OTC drug products. It has been listed as both an active and inactive ingredient. It has been marketed as a skin remedy for minor cuts, burns, abrasions, and for relief of minor irritations of the vagina. The Advisory Review Panel on OTC Contraceptives and Other Vaginal Drug Products (Vaginal Drug Products Panel) placed stabilized aloe vera in Category III (for effectiveness) for the relief of minor irritations of the vagina (advance notice of proposed rulemaking (ANPRM), 48 FR 46694 at 46711 to 46712, October 13, 1983). The panel mentioned that treatment of minor burns, insect bites, and other conditions in which a wet dressing of aloe vera is used has been widely reported and handed down from generation to generation. FDA withdrew this ANPRM in the **Federal Register** of February 3, 1994 (59 FR 5226), because recommended labeling indications and ingredients used for minor irritation, itching, or soreness are not unique to the vaginal area and are already being considered in other OTC drug rulemakings (e.g., antifungal, antimicrobial, and external analgesic). Therefore, FDA planned to consider the ingredients and indications from the vaginal drug products ANPRM in those other rulemakings, as appropriate. However, no submissions for aloe vera were made to the other rulemakings. Because there may not have been an adequate opportunity for interested parties to submit data and information on aloe vera to those rulemakings, FDA invites interested parties to submit any available data and information at this time before it finalizes the monographs for OTC topical antimicrobial and external analgesic drug products. The monograph for OTC topical antifungal drug products is finalized (21 CFR part 333, subpart C), so any interested parties should submit any data and information on aloe vera for this use as a petition to amend the final monograph.

Urea has been marketed as an antipruritic and keratolytic in a number of topical products, with claims that range from ''drug'' (relieves itching) to ''cosmetic'' (for total body dry skin care,soften dry rough skin). Several submissions on products containing urea were made to the Advisory Review Panel on OTC Miscellaneous External Drug Products, but that panel did not complete its review of those submissions before it was disbanded. The submissions need to be updated for FDA to consider them at this time. No data or information on urea have been submitted to the rulemaking for OTC external analgesic drug products. At this time, FDA invites any interested parties to submit data or information on the use of urea as an external analgesic drug product or for any other OTC drug use.

E. Wrinkle Remover Products

Whether a wrinkle remover product should be regulated as a drug or a cosmetic depends on the claims the manufacturer makes for the product. The regulation of cosmetics is covered in 21 CFR part 700. Manufacturers of these products should examine their labeling for these products and to determine if the products products should be submitted to the OTC drug review for evaluation. Manufacturers should determine if the ingredients in those products affect the structure of the skin in some physiological way and, thus, should be submitted for review as drug ingredients section (see section 201(g)(1)(C) of the act (21 U.S.C. 321(g)(1)(C)). For example, some products marketed since 1971 contain alpha hydroxy acids and beta hydroxy acids. These ingredients are included in this request for data and information.

F. Lubricants and Vaginal Moisturizers

The Vaginal Drug Products Panel reviewed OTC drug products for a number of vaginal uses (48 FR 46694). However, those uses did not include vaginal lubricant or moisturizer. A number of products are marketed as a lubricant, personal lubricant, or lubricating jelly. These products have uses that include: ''For personal lubrication when vaginal dryness causes discomfort,'' ''acts as a moisturizer for vaginal dryness,'' ''enhances the comfort and ease of intimate activity,'' and ''enhances sexual pleasure by adding to the body's natural lubrication.'' Other products are marketed as lubricating spermicides [lubricant plus nonoxynol-9] or as a lubricant with nonoxynol-9. These products have claims that state ''spermicide, nonoxynol-9, plus safe water-soluble personal lubrication, feels natural and helps enhance sexual pleasure, lubricating protection against unplanned pregnancy,'' and ''enhances sexual pleasure by adding to the body's natural lubrication, not a contraceptive;

however, because it may kill some sperm, it should not be used if pregnancy is desired.'' FDA considers claims related to relief of discomfort and claims related to the comfort and ease of sexual activity to be drug claims as they relate to the mitigation or treatment of disease (section 201(g)(1)(B) of the act) or use of a product to affect the structure or function of the body (section 201(g)(1)(C) of the act).

Some of these lubricant products also have claims such as: ''For [or eases] insertion of rectal thermometers, enemas, douches, and similar types of nozzles, [and tampons and condoms]'' and ''widely used in gynecological and hospital procedures.'' Such claims make these products medical devices, and FDA has regulated them as such since 1976. FDA regulations in 21 CFR part 880 subpart G list products that are general hospital and personal use miscellaneous devices. The regulation in 21 CFR 880.6375 entitled ''patient lubricant'' states: ''A patient lubricant is a device intended for medical purposes that is used to lubricate a body orifice to facilitate entry of a diagnostic or therapeutic device.'' Claims related to insertion of or facilitating use of rectal thermometers, enemas, douches, tampons, and condoms are considered device claims and are not included as part of this call for data. As these products with device claims can also have drug claims as discussed previously, FDA invites the submission of data to support the drug claims as part of this call for data.

Products marketed as a vaginal moisturizer have claims such as ''replenishes your natural moisture for days at a time,'' ''with regular use, provides continuous vaginal moisture for most women,'' and ''safe immediate relief of vaginal dryness.'' FDA also considers these to be drug claims because they discuss affecting the structure or function of the body and, in some cases, may relate to the mitigation of a disease. Thus, they are also part of this call for data. FDA does not consider these uses of lubricants or vaginal moisturizers to be cosmetic claims because they do not relate to ''cleansing, beautifying, promoting attractiveness, or altering the appearance'' (see section 201(i) of the act).

G. Categories of Unreviewed Drug Products and Ingredients

The categories of unreviewed drug products listed in the following paragraphs are included in this call for data. The ingredients listed under each category heading are those that FDA has identified as possibly being in these products. This list is not intended to be all-inclusive. Manufacturers of drug products in categories not previously reviewed or that contain ingredients not listed herein should submit appropriate information to FDA.

- Ammonia as a reflex stimulant
  - Ammonia inhalants, aromatic spirits of ammonia
- Bed-wetting deterrents
  - Belladonna
- Blemish remedies (excluding topical acne active ingredients in 21 CFR 310.545(a)(1) and 333.310)
  - Allantoin, aloe vera gel, calamine, ethyl alcohol, eugenol, menthol, oil of eucalyptus, oil of peppermint, propylene glycol, sodium alkylarylpolyether sulfonate, titanium dioxide, triclocarban, triclosan
- Breast creams (for use when nursing)
  - Cetyl alcohol, cocoa butter, cod liver oil, dimethicone, glycerin, glyceryl monostearate, hard fat, lanolin, mineral oil, petrolatum, white petrolatum
- Bunion remedies
- Drawing salves (excluding products labeled for the treatment of boils in 21 CFR 310.531) —includes products labeled for the drawing or removal of splinters, slivers, or similar items
  - Ergot fluid extract, ichthammol, juniper tar (oil of cade), magnesium sulfate, pine tar, rosin, rosin cerate, sulfur
- Foot balms, baths, and creams (excluding topical antifungal active ingredients in 21 CFR 310.545(a)(22) and 333.210) —including claims for relieving foot muscle strains and soreness from working out
  - Amyl salicylate, benzalkonium chloride, benzocaine, cajeput oil, carbolic acid, di-isobutyl phenoxy ethoxy ethyldimethyl benzyl ammonium chloride, essential oils, formalin, glyceryl monostearate, 8–hydroxyquinoline, iodized botanical oil, iron sulfate, isopropyl alcohol, lanolin, lithium chloride, magnesium sulfate, methyl salicylate, natural pine needle oil, o-benzyl-p-chlorophenol, oil of eucalyptus, oil of peppermint, oil of thyme, potassium iodide, propylene glycol, sodium bicarbonate, sodium chloride, sodium hypochloride, sodium lauryl sulfate, sodium sesquicarbonate, sodium sulfate, talc, tragacanth mucilage, trisodium phosphate, water soluble chlorophyllins, witch hazel, zinc oxide
- Impotency cures
  - Yohimbine, yohimbine hydrochloride
- Impregnated body wraps for weight reduction
  - Amino acids, collagen, magnesium sulfate
- Lubricants and vaginal moisturizers
  - Benzoic acid, carbomer 934P, carbopol 940, chlorhexidine gluconate, glucono delta lactone, glycerin, hydrogenated palm oil glyceride, hydroxyethylcellulose, mineral oil, natrosol 250H, nonoxynol-9, polycarbophil, polysorbate 60, polyethylene glycol 300, polyquaternium, propylene glycol, sodium hydroxide, sorbic acid, sorbitol
- Medicated bath preparations
  - Acetylated lanolin, alkyl aryl polyether alcohol, benzophenone-3, colloidal sulfur, cottonseed oil, di-isopropyl sebacate, drometrizole, iron sulfate, isopropyl myristate, isopropyl palmitate, isostearic acid, lanolin alcohols extract, lanolin oil, liquid petrolatum, lithium chloride, magnesium sulfate, mineral oil, natural and essential oils, nonoxynol-5, octoxynol-3, PEG–4 dilaurate, PEG–8 dioleate, PEG–40 sorbitan peroleate, PEG–200 dilaurate, Peru balsam, PPG–15, pine needle oil, potassium iodide, stearyl ether oleth-2, sodium bicarbonate, sodium carbonate, sodium chloride, sodium hyposulfate, sodium lauryl sulfate, sodium sesquicarbonate, sodium sulfate, tar distillate, vitamin E, water soluble chlorophyllins
- Nasal moisturizers
  - Glycerin, buffered isotonic saline solution, buffer solution, isotonic saline solution, normal saline, sodium chloride, saline phosphate
- Nonantimicrobial skin wound cleansers (previously listed as ''Detergents'')
  - Tincture of Green Soap, phenol sodium, poloxamer 188
- Prickly heat products
  - Aluminum hydroxide gel, zinc carbonate, zinc oxide
- Skin protectant blister guard
  - Beta-hydroxyquinolone, eugenol, pyroxylin solution
- Urethral creams for males
- Urinary acidifiers
  - Ammonium chloride, ascorbic acid
- Urinary alkalinizers
  - Sodium bicarbonate
- Urinary analgesics/antiseptics
  - Benzoic acid, methenamine, methylene blue, phenazopyridine, phenazopyridine HCl, salicylamide, sodium salicylate
- Wet dressings (excluding astringent active ingredients in 21 CFR 310.545(a)(18)(ii) and 347.10)
  - Aloe vera, calcium polysulfide, calcium thiosulfate, oxyquinoline sulfate, sodium propionate
- Wound wash saline
  - Sodium chloride solution, sterile sodium chloride solution
- Wrinkle removers
  - Alpha hydroxy acids

Alpha-hydroxycaprylic acid, alpha-hydroxyoctanoic acid, alpha-hydroxyethanoic acid and ammonium alpha-hydroxyetnanoate, alpha hydoxy and botanical complex, glycolic acid, glycolic acid and ammonium glycolate, glycomer in crosslinked fatty acids alpha nutrium, hydroxycaprylic acid, L-alpha hydroxy acid, lactic acid, mixed fruit acid, sugar cane extract, tri-alpha hydroxy fruit acids, triple fruit acid
Beta hydroxy acids
Beta hydroxybutanoic acid, salicylic acid[1], trethocanic acid, tropic acid
Alpha and beta hydroxy acids
Citric acid, malic acid
Other ingredients
Egg albumin, magnesium aluminum silicate, protein, sodium silicate

[1] From a chemist's perspective, based on its chemical structure, salicylic acid is not a true beta hydroxy acid. However, cosmetic companies often refer to this ingredient as a beta hydroxy acid. Consequently, many consumers think of it as one as well.

III. Categories That Will Not Be Reviewed

A. Categories Reclassified or Considered as Foods

The categories ''salt substitutes,'' ''salt tablets,'' and ''sweeteners'' were included in the 1975 call-for-data notice (40 FR 38179 at 38183). These types of products are currently regulated as foods and will not be further considered as part of the OTC drug review. During the course of the review, several parties inquired whether ''oral electrolyte replacement'' products and ''weight increasing'' products would be included in the review because these product categories were not mentioned in the 1973 and 1975 call-for-data notices. Oral electrolyte replacement products intended to treat diarrhea are regulated as medical foods under section 529(b)(3) of the act (21 U.S.C. 360ee(b)(3) and 21 CFR 101.9(j)(8)), and products for ''weight gain'' are considered foods (21 U.S.C. 301 *et seq.*).

B. Categories Reclassified or Considered as Medical Devices

In several instances, since 1975, FDA determined that certain types of products previously regulated as drugs should be regulated as medical devices and changed its regulatory approach accordingly (Ref. 4). These products include a spray-on dressing that does not contain a drug component and a ''device incorporating a drug component with the combination product having the primary intended purpose of fulfilling a device function.'' This latter group of products includes a skin closure or bandage with an antimicrobial agent and a wound dressing with an antimicrobial agent. These products are considered combination products regulated by the Center for Devices and Radiological Health (CDRH), using device authorities under the act.

A liquid bandage[5] is defined in 21 CFR 880.5090 as ''a sterile device that is a liquid, semiliquid, or powder and liquid combination used to cover an opening in the skin or as a dressing for burns. The device is also used as a topical skin protectant.'' A medical adhesive tape and adhesive bandage is defined in 21 CFR 880.5240 as:

> ''* * * a device intended for medical purposes that consists of a strip of fabric material or plastic, coated on one side with an adhesive, and may include a pad of surgical dressing without a disinfectant. The device is used to cover and protect wounds, to hold together the skin edges of a wound, to support an injured part of the body, or to secure objects to the skin.''

FDA is not including any of these device products in this current call for data.

IV. Request for Data and Information

FDA invites the submission of data, published and unpublished, and other information, pertinent to all active ingredients in these and other eligible unreviewed OTC drug categories (see section II of this document). Interested persons should include any consumer comprehension data relating to the OTC use of drug products containing these ingredients. These data and information will contribute to the following objectives:

- Facilitate FDA's review and aid in its determination of whether these OTC drugs for human use are generally recognized as safe and effective and not misbranded under their recommended conditions of use, and
- Provide all interested persons an opportunity to present for consideration the best data and information available to support the stated claims for these products. Any relevant data and information on these drug products that may have been submitted to earlier rulemakings or in response to earlier call-for-data notices should be updated and resubmitted to facilitate FDA's review of these products.

FDA also requests manufacturers to identify other OTC drug products that still need to be reviewed to determine if they are GRAS/E for OTC use. For OTC drug products that should have been submitted for review but for which data and information have not been received, FDA may not consider those products to be GRAS/E for OTC use. In accordance with section 201(p) of the act, such drug products would be considered new drugs and would need an NDA to be marketed.

In the **Federal Register** of January 23, 2002 (67 FR 3060), FDA published a final rule providing additional criteria and procedures for classifying OTC drugs as GRAS/E and not misbranded. The procedures identified in that rule apply to OTC drugs initially marketed in the United States after the OTC drug review began in 1972 and to OTC drugs without any U.S. marketing experience. This notice is not intended to apply to ingredients covered by the additional criteria and procedures identified in that rule.

This notice also does not apply to new chemical entities that have not previously been marketed for OTC use, regardless of the claims. These products should be submitted to FDA for evaluation in an NDA under 21 CFR part 314.

Manufacturers submitting data and information in response to this call for data should include any information (e.g., information showing when the product was first marketed in the United States) relating to the regulatory status of their product under the general regulatory policy described in the next section of this document. If such information does not exist or is found to be inadequate, such products may be at risk of regulatory action by FDA.

V. General Regulatory Policy

In order for a product to be eligible for the OTC drug review that began on May 11, 1972, the product or similarly formulated and labeled products had to be marketed as OTC drugs at the inception of the OTC drug review, which date was later extended to on or before December 4, 1975. Prescription drug products were also eligible for the review, as long as they continued to be marketed on a prescription basis while FDA evaluated data to ascertain whether the ingredient or combination of ingredients in the product could be proposed as GRAS/E for OTC use.

FDA may exercise its enforcement discretion to permit OTC drug products that do not have an approved NDA during the pendency of the OTC drug review to be marketed provided the following conditions are met:

1. The product or similarly formulated and labeled products were marketed as OTC drugs at the inception

[5] The categories ''liquid bandages (sprays)—protective skin preparations'' and ''medicated bandages'' were in the 1975 call-for-data notice (40 FR 38179 at 38181), which listed 23 active ingredients possibly used in these products. These ingredients in products for these specific uses would not be considered OTC drug active ingredients.

of the OTC drug review on May 11, 1972, a date that was later extended to on or before December 4, 1975 (see § 330.13).

2. Such product does not constitute a hazard to health.

3. The product formulation is not regarded regarded to be a prescription drug within the meaning of section 503(b) of the act (21 U.S.C. 353(b)).

4. The product is an OTC drug and does not bear claims for serious disease conditions that require the attention and supervision of a licensed practitioner.

To be considered in this review, eight copies of the data and information must be submitted, preferably bound, indexed, and on standard size paper (approximately 8½ by 11 inches). FDA suggests that all submissions be in the format described in § 330.10(a)(2).

In accordance with § 330.10(a)(2), FDA will handle all submitted data and information as confidential except the general comments submitted to the docket in response to this notice and the answers to the questions and specific information requested on phenazopyridine HCl in section II.B of this document. FDA wants the answers to the questions and the specific information on phenazopyridine HCl to be publicly available when it reviews this ingredient so that all interested parties will have access to this information and be able to participate fully in the deliberations. However, FDA will put all submitted data and information on public display in the Division of Dockets Management (see **ADDRESSES**) 30 days after publication of any proposed rules resulting from the review of the submitted material, except to the extent that the person submitting it demonstrates that it falls within the confidentiality provisions of 18 U.S.C. 1905, 5 U.S.C. 552(b), or section 301(j) of the act (21 U.S.C. 331(j)). At the time of publication, FDA will provide an address where requests for confidentiality should be submitted.

Data and information should be addressed to the Division of OTC Drug Products (see **ADDRESSES**). Data submitted after the closing of the comment period (see **DATES** section) will not be considered except by petition under 21 CFR 10.30. Interested persons may submit written or electronic comments to the Division of Dockets Management before the closing date. Three paper copies of all mailed comments are to be submitted. Individuals submitting written comments or anyone submitting electronic comments may submit one copy. Comments are to be identified with the docket number found in brackets in the heading of this document and may be accompanied by a supporting memorandum or brief. Received comments may be seen in the Division of Dockets Management between 9 a.m. and 4 p.m., Monday through Friday.

VI. References

The following references are on display in the Division of Dockets Management (see **ADDRESSES**) and may be seen by interested persons between 9 a.m. and 4 p.m., Monday through Friday.

1. "Bioassay of Phenazopyridine Hydrochloride for Possible Carcinogenicity," National Cancer Institute Carcinogenesis Technical Report Series No. 99, U.S. Department of Health, Education, and Welfare, Publication No. NIH 78–1349, 1978.

2. Labeling for Uristat (Urinary Pain Relief Tablets).

3. Food and Drug Administration, Compliance Policy Guides, No. 7132b.04, issued October 1, 1980, revised May 22, 1987.

4. Food and Drug Administration, Intercenter Agreement Between the Center for Drug Evaluation and Research and the Center for Devices and Radiological Health, October 31, 1991.

Dated: December 22, 2003.

Jeffrey Shuren,

Assistant Commissioner for Policy.

[FR Doc. 03–32102 Filed 12–30–03; 8:45 am]

BILLING CODE 4160–01–S

DEPARTMENT OF HEALTH AND HUMAN SERVICES

Food and Drug Administration

[FDA 225–04–8002]

Exchange of Letters Between the Food and Drug Administration and the European Commission and the European Agency for the Evaluation of Medicinal Products Concerning the Sharing of Documents and/or Information Related to Assuring the Safety, Quality, and Efficacy of Pharmaceutical Products Intended for Human or Animal Use

AGENCY: Food and Drug Administration, HHS.

ACTION: Notice.

SUMMARY: The Food and Drug Administration (FDA) is providing notice of an exchange of letters between FDA and the European Commission and the European Agency for the Evaluation of Medicinal Products (EMEA). The participants concluded this exchange of letters on September 12, 2003. These letters express the intentions of FDA, the European Commission, and EMEA to continue cooperative activities to further enhance and strengthen communication between the respective organizations and further enhance public health promotion and protection in the European Union and the United States of America.

DATES: The agreement became effective September 12, 2003.

FOR FURTHER INFORMATION CONTACT: Michelle Limoli, European Commission Office of International Programs (HFG–1), Food and Drug Administration, 5600 Fishers Lane, Rockville, MD 20857, 301–827–0908.

SUPPLEMENTARY INFORMATION: In accordance with 21 CFR 20.108(c), which states that all written agreements and memoranda of understanding between FDA and others shall be published in the **Federal Register**, the agency is publishing notice of this exchange of letters.

Dated: December 18, 2003.

Jeffrey Shuren,

Assistant Commissioner for Policy.

BILLING CODE 4160–01–S

DEPARTMENT OF HEALTH & HUMAN SERVICES

Public Health Service

Food and Drug Administration
Rockville MD 20857

September 12, 2003

Mr. Paul Weissenberg
Director, Directorate F
European Commission
rue de la Loi
B-1049 Brussels
BELGIUM

Mr. Thomas Lönngren
Executive Director
The European Agency for the
Evaluation of Medicinal Products
7 Westferry Circus
Canary Wharf
London, E14 4HB
UNITED KINGDOM

Dear Mr. Weissenberg and Mr. Lönngren:

The Food and Drug Administration (FDA) is pleased to cooperate with the European Commission (in its pharmaceutical regulation capacity) and The European Agency for the Evaluation of Medicinal Products (EMEA) (collectively "the Participants") to facilitate the sharing of documents and/or information related to assuring the safety, quality, and efficacy of pharmaceutical products intended for (a) human use (including biological products and orphan drugs) or (b) animal use. This information-sharing arrangement is intended, among other things, to provide for the exchange of information between our staffs during the review and evaluation of investigational and marketing applications and the post-marketing surveillance of these products. We expect this cooperative activity to further enhance and strengthen communication between our respective organizations and further enhance public health promotion and protection in the European Union (EU) and the United States of America (USA). This arrangement should further the types of public health-related cooperative activities envisioned under the Guidelines on Regulatory Cooperation and Transparency developed by the EU and the USA under the Transatlantic Economic Partnership.

The types of information that may be shared include, but are not limited to, the following:

1. Drafts of pending laws, regulations, guidance documents, procedures and other technical documents available to the individual Participants related to pharmaceutical products (as defined in the previous paragraph).

2. Post-marketing data and information that could have an impact on the public health, such as pharmacovigilance data or information about impending regulatory actions.

3. Information on quality defect or product recalls of pharmaceutical products, known by the FDA to have been manufactured or distributed in the EU, and vice versa.

4. Information contained in or related to marketing or investigational applications for human or animal pharmaceutical products, as well as information related to orphan drug designations. This also includes information on maximum residue levels in these applications.

5. Without prejudice to arrangements set out in the framework of the Pharmaceutical Good Manufacturing Practices Annex to the Agreement on Mutual Recognition between the USA and the European Community, inspection reports and product sample test results describing the compliance of a pharmaceutical product or manufacturing facility with regulatory requirements.

6. Good Clinical Practices (GCP) inspection reports of clinical trial sites.

7. Information technology information supporting the regulatory process.

There also may be occasions when scientific experts from the Participants will visit each other's agencies and will have access to non-public information. We have, therefore, enclosed an example of the Visitor Commitment Statement that visitors from the EMEA or the European Commission would be required to sign while visiting FDA if they are to have access to non-public information during the visit. We understand that FDA visitors to the EMEA or the European Commission would sign a similar commitment if, during their visit to the EMEA or the European Commission, they are to have access to non-public information.

Both Participants note that it is an essential element of this international arrangement on regulatory cooperation that confidential information emanating from the other Participant will be treated as such.

On each occasion where there is a request for disclosure to third parties of non-public information received from EMEA or the European Commission, FDA shall consult with the EMEA or the European Commission. Likewise, on each occasion where there is a request for disclosure of non-public information received from FDA, the EMEA or the European Commission shall consult with the FDA.

Some of the information identified above may contain non-public information, such as confidential commercial information; trade secret information; personal privacy information; law enforcement information; or internal, pre-decisional information. FDA may only share these types of information as permitted by USA laws and FDA regulations. Among other things, FDA regulations require that a foreign government agency provide written assurance to FDA that it has the authority to protect non-public information from public disclosure and that it will not disclose such information. The EMEA and the European Commission have provided a statement to FDA affirming their authority to maintain the confidentiality of non-public information provided by FDA to their officials or representatives under Article 4.1(a) of Regulation (EC) 1049/2001, which protects non-public information from further disclosure. The EMEA and the European Commission agree that "confidential commercial information" includes information referred to in the US Freedom of Information Act, 5 U.S.C. § 552(b)(4), and in Regulation (EC) No. 1049/2001.

Similarly, FDA affirms that it has the authority to protect the confidentiality of the non-public information identified above under the Freedom of Information Act (FOIA) (5 U.S.C. § 552); the Trade Secrets Act (18 U.S.C. § 1905); section 301(j) of the Federal Food, Drug, and Cosmetic Act (21 U.S.C.§ 331(j)); and other applicable laws. Under the FOIA, the above non-public information shared by the EMEA or the European Commission with FDA is the type of information that can be withheld from public disclosure. FDA, therefore, in accordance with these statutes, consents not to disclose such non-public information provided to FDA by the EMEA or the European Commission absent the written permission of the sponsor/owner of the non-public information or written confirmation by the EMEA or the European Commission that the non-public information no longer has confidential status. The FDA agrees that "confidential commercial information" includes information referred to in the US Freedom of Information Act, 5 U.S.C. § 552(b)(4), and in Regulation (EC) No. 1049/2001.

Sharing of non-public information under this arrangement is in the interest of the public health by reason of the EMEA's or the European Commission's possessing information concerning the safety, efficacy, or quality of a product or information concerning an investigation. Further, the exchange of non-public information under this arrangement is reasonably necessary to facilitate cooperative regulatory activities between FDA, on the one hand, and the EMEA and the European Commission, on the other hand. All non-public information will be shared with the EMEA and the European Commission under this agreement in accordance with Title 21 of the Code of Federal regulations § 20.89.

This cooperative arrangement is not intended to compromise any of the Participants' abilities to carry out their responsibilities and is not intended to create any kind of legal obligation under international or other law on the part of the USA, the FDA, the European Commission, the EMEA, or the European Union.

Page 4 – Mr. Paul Weissenberg
Mr. Thomas Lönngren

This arrangement will commence 12 September 2003 for an initial period of two years, and remain in effect until 12 September 2005, during which time we will together assess its effectiveness on at least an annual basis and make any needed revisions.

This letter, together with your letter on behalf of the EMEA and the European Commission, will constitute our mutual commitments to implement these procedures.

We look forward to implementing these procedures that will allow for the sharing of information and to continuing our many cooperative activities to enhance the public health of our regions and to foster further the already beneficial and productive relationship between the EMEA, the European Commission, and the FDA.

Sincerely,

Mark B. McClellan, M.D., PhD.
Commissioner of Food and Drugs

Enclosure

VISITOR COMMITMENT TO PROTECT NON-PUBLIC INFORMATION[1]

I, _____, a representative of_____ _____, am on an official visit at the United States Food and Drug Administration (FDA). During the course of my visit, I understand that I may have access to non-public information, including confidential commercial information, trade secret information, and internal non-public FDA information. I agree to protect all non-public information to which I have access in the following manner:

1. Store the non-public information in the secured offices of FDA, unless released to me by appropriate FDA officials; and

2. Grant access to this information only to known employees of FDA or to such other persons as may be designated in writing by FDA.

Further, I agree to:

1. Assist in reviewing the security measures I will employ in protecting non-public information;

2. Return all non-public information and any notes related to this information to FDA either upon request by FDA or, at the latest, upon completion of my visit;

3. Report to an FDA official all incidents in which unauthorized persons might have gained access to non-public information made available to me; and

4. Not disclose, publish, or share such non-public information without the express permission of FDA.

Furthermore, I have no financial interest in any manufacturer of a human or animal drug product.

I understand that I may be subject to criminal penalties if I disclose non-public information without auathorization.

_____

SIGNATURE DATE

TYPED OR PRINTED NAME OF VISITOR:_____

_____

WITNESSED (SIGNATURE) DATE

[1] This document satisfies the requirements of Title 21 of the Code of Federal Regulations § 20.89 (c)(1)(ii)(C) relating to a foreign scientist visiting the Food and Drug Administration on the agency's premises as part of a joint review or long-term cooperative training effort authorized under section 708 of the Federal Food, Drug, and Cosmetic Act.

European Commission

European Agency for the
Evaluation of Medicinal Products

September 12, 2003

Dear Dr McClellan,

The Food and Drug Administration (FDA) of the United States of America (US) on the one side and European Commission's Directorate General Enterprise and the European Agency for the Evaluation of Medicinal Products (EMEA) (collectively "the Participants") on the other side have recognised the need to further improve their relationship and in particular, in the Transatlantic Economic Partnership Action Plan, the need for increased co-operation as a means to address technical barriers to trade in goods. This view was later reflected in the Guidelines on regulatory co-operation and transparency between the US Government and the European Commission. In particular these Guidelines encourage the identification of areas where regulatory co-operation could be established.

One of the specific aims mentioned in the guidelines is to obtain from each other and interested parties the benefit of the expertise, perspectives and ideas for alternative approaches to regulation. In addition the idea of harmonisation of regulatory requirements *ex novo* is specifically highlighted.

There is already considerable experience in the field of regulatory co-operation between the FDA and European Commission administrations responsible for regulation in the pharmaceutical sector. To date, this has been in the context of regular bilateral meetings between representatives of DG Enterprise (since 1989) and representatives of the FDA.

The success of existing regulatory co-operative measures on harmonisation of technical requirements and an agreement on a common format for the submission of certain regulatory information to the respective pharmaceutical regulatory authorities has led to the desire from both sides to increase the range of information that can be shared in the interests of better regulatory co-operation.

Mark B. McClellan, M.D., Ph.D
Commissioner
Food and Drug Administration
5600 Fishers Lane, Rm 14-71
Rockville, MD 20857

In this context, and within the scope of the guidelines on regulatory co-operation, the European Commission together with the EMEA and the FDA see value in establishing an arrangement to exchange more regulatory information including advance drafts of legislation and/or regulatory guidance documents as well as information related to the authorisation and supervision of medicinal products. Because this type of information may include information of a non-public nature, both sides agree, to the extent permitted by their respective laws, to keep the information exchanged confidential.

The potential benefits of this exercise are expected to include accelerated access of patients to new and innovative medicines; resource savings due to reduced duplication of assessment and improved performance and safety as a result of the involvement of the best regulatory expertise from both sides. This co-operation shall not compromise each Participant's ability to carry out its responsibilities and shall not create any kind of legal obligation on the part of the FDA, the European Commission, or the EMEA.

Therefore the European Commission and the EMEA are pleased to cooperate with the FDA to facilitate the sharing of documents and/or information related to ensuring the safety, quality, and efficacy of medicinal products for human and veterinary use, including orphan medicinal products, authorised or under review both in the US and in the European Union (EU). This is also intended to include information on maximum residue limits.

In this context, the term 'medicinal products authorised in the European Union' refers to products subject to evaluation or authorised under the centralised procedure as well as medicinal products authorised at national level by the EU Member States that are subject to official European Community arbitration and referrals.

This cooperation activity will strengthen communication between public authorities involved in these activities and reinforce public health protection.

The type of information that may be shared includes, but is not limited to:

1. All legislation and guidance documents available under the rules and regulations governing medicinal products in the EU (http://dg3.eudra.org/F2/eudralex/index.htm). This also includes all position papers, notes for guidance and any other guidance documents either in draft, finalised or released for consultation.

2. Post-authorisation pharmacovigilance data, particularly those of urgent nature related to EU or non-EU originating adverse drug reactions as well as safety concerns arising from periodic safety update reports and post-authorisation obligations and commitments.

3. Information on quality defect or product recalls for medicinal products known to the EMEA or to the European Commission to have been manufactured or distributed in the US.

4. Information contained in applications for scientific advice, orphan medicine designation, marketing authorisation or post-authorisation activities of significant public health interest, and maximum residue limits.

5. Without prejudice to arrangements set out in the framework of the US-EC Mutual Recognition Agreement in particular its Sectorial Annex on Pharmaceutical

Good Manufacturing Practices (GMP), GMP Inspection reports and product sample results available to the EMEA or the European Commission.

6. Good Clinical Practices (GCP) inspections for specific products and GCP Inspection reports available to the EMEA or the European Commission.

7. Information Technology systems supporting regulatory processes.

At the EMEA, the information may be shared with national experts on secondment from the EU Member States, EEA countries, or EU candidate countries. These individuals will be required to sign a confidentiality undertaking with the EMEA (form to be annexed). This form will also be completed by each FDA staff member visiting the EMEA.

The Participants reserve the right to limit the scope of the above information should its dissemination or exchange undermine specific interests, including commercial, industrial or professional secrecy, the protection of the individual and of privacy, the public interests of the EU or the protection of the EMEA or the European Commission's interests in the confidentiality of its proceedings. In some cases, exchange of information under this arrangement may be subject to prior authorisation from the companies concerned.

Participants note that it is an essential element of this international arrangement on regulatory cooperation that confidential information emanating from the other Participant will be treated as such.

On each occasion where there is a request for disclosure to third parties of non-public information received from EMEA or the European Commission, FDA shall consult with the EMEA or the European Commission. Likewise, on each occasion where there is a request for disclosure of non-public information received from FDA, the EMEA or the European Commission shall consult with the FDA.

The EMEA and the European Commission affirm that they have the authority to protect non-public information, including confidential commercial information, provided to their officials or representatives by the FDA, and will protect such information as information not to be disclosed under Article 4.1(a) of Regulation (EC) No 1049/2001. The EMEA and the European Commission understand that the FDA considers it crucial that this non-public information be protected from disclosure; otherwise, it could endanger the international relations between the Participants. The EMEA and the European Commission agree that "confidential commercial information" includes information referred to in the US Freedom of Information Act, 5 U.S.C. § 552(b)(4), and in Regulation (EC) No. 1049/2001

Similarly, the FDA affirms that it has the authority to protect non-public information, including confidential commercial information, provided to its officials or representatives by the EMEA or the European Commission, and will protect such information as information not to be disclosed under the US Freedom of Information Act. The FDA understands that the EMEA and the European Commission consider it crucial that this non-public information be protected from disclosure; otherwise, it could endanger the international relations between the Participants. The FDA agrees that "confidential commercial information" includes information referred to in the US Freedom of Information Act, 5 U.S.C. § 552(b)(4), and in Regulation (EC) No. 1049/2001.

This arrangement is concluded for a period of two years after which we will assess at least annually its effectiveness.

The European Commission and the EMEA should be obliged if FDA would acknowledge receipt of this letter and confirm that this letter and your reply constitute the arrangement set out above between our services.

We look forward to implementing this arrangement allowing for the sharing of non-public information and to continuing cooperative activities to further enhance the relationship between the FDA, the EMEA, and the European Commission, in the best interests of public and animal health.

Paul Weissenberg

Director, DG Enterprise
European Commission

Thomas Lönngren

Executive Director
European Agency for the
Evaluation of Medicinal
Products

[FR Doc. 03–32005 Filed 12–30–03; 8:45 am]
BILLING CODE 4160–01–C

DEPARTMENT OF HEALTH AND HUMAN SERVICES

Health Resources And Services Administration

Agency Information Collection Activities: Proposed Collection: Comment Request

In compliance with the requirement for opportunity for public comment on proposed data collection projects (section 3506(c)(2)(A) of Title 44, United States Code, as amended by the Paperwork Reduction Act of 1995, Public Law 104–13), the Health Resources and Services Administration (HRSA) publishes periodic summaries of proposed projects being developed for submission to OMB under the Paperwork Reduction Act of 1995. To request more information on the proposed project or to obtain a copy of the data collection plans and draft instruments, call the HRSA Reports Clearance Officer on (301) 443–1129.

Comments are invited on: (a) Whether the proposed collection of information is necessary for the proper performance of the functions of the agency, including whether the information shall have practical utility; (b) the accuracy of the agency's estimate of the burden of the proposed collection of information; (c) ways to enhance the quality, utility, and clarity of the information to be collected; and (d) ways to minimize the burden of the collection of information on respondents, including through the use of automated collection techniques or other forms of information technology.

Proposed Project: The Single Grant Application Form for Consolidated Community Health Centers—In Use Without Approval

The Consolidated Health Center Program is administered by the Health Resources and Services Administration's (HRSA) Bureau of Primary Health Care (BPHC). Grant funding opportunities are provided for existing Health Centers for continuation funding. The single grant application form has been designed for existing grantees to apply for continuation funding from one or more of the following BPHC program funding sources authorized under section 330 and 301 of the Public Health Service (PHS) Act: Community Health Centers (CHC), Migrant Health Centers (MHC), Health Care for the Homeless(HCH), Public Housing Primary Care (PHPC), School Based Health (aka HSHC), and/or Pacfic Basin.

Estimates of annualized reporting burden are as follows:

Type of application form	Number of respondents	Hours per response	Total burden hours
Single Grant Application	225	100	22,500

Send comments to Susan G. Queen, Ph.D., HRSA Reports Clearance Officer, Room 14–45, Parklawn Building, 5600 Fishers Lane, Rockville, MD 20857. Written comments should be received within 60 days of this notice.

Dated: December 23, 2003.

Tina M. Cheatham,

Acting Director, Division of Policy Review and Coordination.

[FR Doc. 03–32162 Filed 12–30–03; 8:45 am]

BILLING CODE 4165–15–P

DEPARTMENT OF HEALTH AND HUMAN SERVICES

Health Resources and Services Administration

National Advisory Committee on Rural Health and Human Services; Notice of Meeting

In accordance with section 10(a)(2) of the Federal Advisory Committee Act (Public Law 92–463), notice is hereby given that the following committee will convene its forty-sixth meeting.

Name: National Advisory Committee on Rural Health and Human Services

Date and Time: February 22, 2004; 2 p.m.–5 p.m.; February 23, 2004; 8:30 a.m.–5 p.m.; February 24, 2004; 8:30 a.m.–10:30 a.m.

Place: Grand Hyatt Washington, 1000 H Street NW., Washington, DC 20001, Phone: 1–800–233–1234.

Status: The meeting will be open to the public.

Purpose: The National Advisory Committee on Rural Health and Human Services provides advice and recommendations to the Secretary with respect to the delivery, research, development and administration of health and human services in rural areas.

Agenda: Sunday afternoon, February 22, 2004 at 2 p.m., the Chairperson, the Honorable David Beasley, will open the meeting and welcome the Committee. The first session will open with a discussion of the Committee business and a review of the 2004 Report to the Secretary by the Honorable David Beasley. This will be followed by an update from the Committee Staff represented by the following: Ms. Jennifer Riggle, Office of Rural Health Policy; Mr. Dennis Dudley, Administration on Aging; and Ms. Rachel Owen, Administration on Children and Families. The final session for the day will be an overview of the Medicare Prescription Drug Bill. The Sunday meeting will close at 5 p.m.

Monday morning, February 23, 2004 at 8:30 a.m. the meeting will begin with the 2005 Report Planning, led by the Honorable David Beasley and Mr. Tom Morris, Acting Deputy Director of the Office of Rural Health Policy. At 9:30 a.m. the Committee will hear a presentation of the Rural Priorities of the Department of Health and Human Services by Dr. Wade Horn, Assistant Secretary for Children and Families and Secretary Tommy Thompson (invited). The Committee will resume discussion of the 2005 Workplan and break for a joint lunch with the National Rural Health Association Policy Institute (lunch will be provided for the Committee only). After lunch the Committee will hear a panel discussion on rural health and human services emerging issues. The Monday session will end with continued discussion of the 2005 Workplan.

The final session will be convened Tuesday morning, February 24 at 8:30 a.m. The Committee will review the discussion of the 2005 Workplan. The meeting will conclude with a discussion of the June and September meetings. The meeting will be adjourned at 10:30 a.m.

For Further Information Contact: Anyone requiring information regarding the Committee should contact Tom Morris, MPA, Executive Secretary, National Advisory Committee on Rural Health and Human Services, Health Resources and Services Administration, Parklawn Building, Room 9A–55, 5600 Fishers Lane, Rockville, MD 20857, telephone (301) 443–0835, Fax (301) 443–2803.

Persons interested in attending any portion of the meeting should contact Michele Pray-Gibson, Office of Rural Health Policy (ORHP), telephone (301) 443–0835. The Committee meeting agenda will be posted on ORHP's Web site *http://www.ruralhealth.hrsa.gov.*

Dated: December 23, 2003.

Tina M. Cheatham,

Acting Director, Division of Policy Review and Coordination.

[FR Doc. 03–32161 Filed 12–30–03; 8:45 am]

BILLING CODE 4165–15–P

DEPARTMENT OF HEALTH AND HUMAN SERVICES

National Institute of Mental Health; Notice of Closed Meetings

Pursuant to section 10(d) of the Federal Advisory Committee Act, as amended (5 U.S.C. Appendix 2), notice is hereby given of the following meetings.

The meetings will be closed to the public in accordance with the provisions set forth in sections 552b(c)(4) and 552b(c)(6), Title 5 U.S.C., as amended. The contract proposals and the discussions could disclose confidential trade secrets or commercial property such as patentable material, and personal information concerning individuals associated with the contract proposals, the disclosure of which would constitute a clearly unwarranted invasion of personal privacy.

Name of Committee: National Institute of Mental Health Special Emphasis Panel, SBIR Phase I, Topic 46.

Date: January 8, 2004.

Time: 12 p.m. to 12:30 p.m.

Agenda: To review and evaluate contract proposals.

Place: National Institutes of Health, Neuroscience Center, 6001 Executive Boulevard, Rockville, MD 20852 (Telephone Conference Call).

Contact Person: Martha Ann Carey, PhD, RN, Scientific Review Administrator, Division of Extramural Activities, National Institute of Mental Health, NIH, Neuroscience Center, 6001 Executive Blvd., Room 6151, MSC 9608, Bethesda, MD 20892–9608, 301–443–1606, *mcarey@mail.nih.gov.*

This notice is being published less than 15 days prior to the meeting due to the timing limitations imposed by the review and funding cycle.

Name of Committee: National Institute of Mental Health Special Emphasis Panel, Autism Spectrum Disorders.

Date: February 13, 2004.

Time: 11 a.m. to 4:30 p.m.

Agenda: To review and evaluate contract proposals.

Place: Holiday Inn Select Bethesda, 8120 Wisconsin Ave., Bethesda, MD 20814.

Contact Person: Peter J. Sheridan, PhD, Scientific Review Administrator, Division of Extramural Activities, National Institute of Mental Health, NIH, Neuroscience Center, 6001 Executive Blvd., Room 6142, MSC 9606, Bethesda, MD 20892–9608. 301–443–1513, *psherida@mail.nih.gov.*

(Catalogue of Federal Domestic Assistance Program Nos. 93.242, Mental Health Research Grants; 93.281, Scientist Development Award, Scientist Development Award for Clinicians, and Research Scientist Awar; 93.282, Mental Health National Research Service Awards for Research Training, National Institutes of Health, HHS)

Dated: December 23, 2003.

LaVerne Y. Stringfield,

Director, Office of Federal Advisory Committee Policy.

[FR Doc. 03–32119 Filed 12–30–03; 8:45 am]

BILLING CODE 4140–01–M

DEPARTMENT OF HEALTH SERVICES

National Institutes of Health

National Institute Arthritis and Musculoskeletal and Skin Diseases; Notice of Meeting

Pursuant to section 10(d) of the Federal Advisory Committee Act, as amended (5 U.S.C. Appendix 2), notice is hereby given of a meeting of the National Arthritis and Musculoskeletal and Skin Diseases Advisory Council.

The meeting will be open to the public as indicated below, with attendance limited to space available. Individuals who plan to attend and need special assistance, such as sign language interpretation or other reasonable accommodations, should notify the Contact Person listed below in advance of the meeting.

The meeting will be closed to the public in accordance with the provisions set forth in sections

552b(c)(4) and 552(c)(6), Title 5 U.S.C., as amended. The grant applications and/or contract proposals and the discussions could disclose confidential trade secrets or commercial property such as patentable material, and personal information concerning individuals associated with the grant applications and/or contract proposals, the disclosure of which would constitute a clearly unwarranted invasion of personal privacy.

Name of Committee: National Arthritis and Musculoskeletal and Skin Diseases Advisory Council.

Date: January 29, 2004.

Time: 8:30 a.m. to 5 p.m.

Agenda: Grant applications and/or proposals.

Place: National Institutes of Health, Building 31, 31 Center Drive, Conference Room 10, Bethesda, MD 20892.

Contact Person: Cheryl Kitt, PhD, Director, Division of Extramural Activities, National Institutes of Arthritis and Musculoskeletal and Skin Diseases, 1 Democracy Blvd., Suite 800, Bethesda, MD 20892, (301) 594–2463, *kittc@niams.nih.gov.*

(Catalogue of Federal Domestic Assistance Program Nos. 93.846, Arthritis, Musculoskeletal and Skin Diseases Research, National Institutes of Health, HHS)

Dated: December 23, 2003.

LaVerne Y. Stringfield,

Director, Office of Federal Advisory Committee Policy.

[FR Doc. 03–32120 Filed 12–30–03; 8:45 am]

BILLING CODE 4140–01–M

DEPARTMENT OF HEALTH AND HUMAN SERVICES

National Institutes of Health

National Institute of Allergy and Infectious Diseases; Notice of Closed Meetings

Pursuant to section 10(d) of the Federal Advisory Committee Act, as amended (5 U.S.C. Appendix 2), notice is hereby given of the following meetings.

The meetings will be closed to the public in accordance with the provisions set forth in sections 552b(c)(4) and 552b(c)(6), Title 5 U.S.C., as amended. The grant applications and the discussions could disclose confidential trade secrets or commercial property such as patentable material, and personal information concerning individuals associated with the grant applications, the disclosure of which would constitute a clearly unwarranted invasion of personal privacy.

Name of Committee: National Institute of Allergy and Infectious Diseases Special Emphasis Panel, Botulinum Toxin Biophysics P01.

Date: January 16, 2004.

Time: 8:30 a.m. to 5 p.m.

Agenda: To review and evaluate grant applications.

Place: Double Tree Hotel, 1750 Rockville Pike, Rockville, MD 20852.

Contact Person; Tracy A. Shahan, PhD, Scientific Review Administrator, Scientific Review Program, Division of Extramural Activities, NIAID/NIH/DHHS, Room 3121, 6700B Rockledge Drive, MSC 7616, Bethesda, MD 20892–7616, (301) 496–2606, *tshahan@niaid.nih.gov.*

Name of Committee: National Institute of Allergy and Infectious Diseases Special Emphasis Panel, Respiratory Immunity Against Agents of Bioterrorism.

Date: January 20, 2004.

Time: 1 p.m. to 5 p.m.

Agenda: To review and evaluate grant applications.

Place: 6700–B Rockledge Drive, 3134, Bethesda, MD 20892 (Telephone Conference Call).

Contact Person: Nancy B. Saunders, PhD, Scientific Review Administrator, Scientific Review Program, Division of Extramural Activities, NIAID/NIH/DHHS, Room 3134, 6700–B Rockledge Drive, MSC 7616, Bethesda, MD 20892–7616, (301) 435–3569, *ns120v@nih.gov.*

Name of Committee: National Institute of Allergy and Infectious Diseases Special Emphasis Panel, Evasion of the Innate Immune Response.

Date: January 22, 2004.

Time: 1 p.m. to 4 p.m.

Agenda: To review and evaluate grant applications.

Place: 6700–B Rockledge Drive, 3134, Bethesda, MD 20892 (Telephone Conference Call).

Contact Person: Nancy B. Saunders, PhD, Scientific Review Administrator, Scientific Review Program, Division of Extramural Activities, NIAID/NIH/DHHS, Room 3134, 6700–B Rockledge Drive, MSC 7616, Bethesda, MD 20892–7616, (301) 435–3569, *ns120v@nih.gov.*

(Catalogue of Federal Domestic Assistance Program Nos. 93.855, Allergy, Immunology, and Transplantation Research; 93.856, Microbiology and Infectious Diseases Research, National Institutes of Health, HHS)

Dated: December 23, 2003.

LaVerne Y. Stringfield,

Director, Office of Federal Advisory Committee Policy.

[FR Doc. 03–32121 Filed 12–30–03; 8:45 am]

BILLING CODE 4140–01–M

DEPARTMENT OF HOMELAND SECURITY

Coast Guard

[USCG–2003–16780]

Area Maritime Security Advisory Committees

AGENCY: Coast Guard, DHS.

ACTION: Solicitation for Membership.

SUMMARY: Under the Federal Advisory Committee Act, the Secretary of Homeland Security is establishing Area Maritime Security Advisory Committees, and requesting qualified individuals interested in serving on these committees to apply for membership.

DATES: Requests for membership should reach your local Captain of the Port on or before January 30, 2004.

ADDRESSES: Requests for membership should be submitted to your local Captain of the Port. Local Addresses for each Captain of the Port are as follows:

MSO Boston, 455 Commercial St., Boston, MA 02109–1045, (617) 223–3001.

USCG Activities New York, 212 Coast Guard Dr., Staten Island, NY 10305, (718) 354–4037.

MSO Providence, 20 Risho Ave., East Providence, RI 02914–1208, Main Number: (410) 435–2300.

MSO Portland, ME, 103 Commercial St., Portland, ME 04101–4726, (207) 780–3251.

Group/MSO Long Island Sound, 120 Woodward Ave., New Haven, CT 06512–3698, Main Number: (203) 468–4401.

MSO Hampton Roads, Norfolk Fed. Bldg., 200 Granby St., Norfolk, VA 23510–1888, (757) 441–3295.

Coast Guard Activities Baltimore, 2401 Hawkins Point Rd., Baltimore, MD 21226–1791, (410) 576–2585.

MSO Wilmington, 1502 23rd St., Wilmington, NC 28405, Main Number: (910) 772–2200.

MSO/Group Philadelphia, 1 Washington Ave., Philadelphia, PA 19147–4395, (215) 271–4880.

MSO Miami, P.O. Box 01–6940, Miami, FL 33101–6940, Main Number: (305) 535–8705.

MSO Jacksonville, Suite 400, 7820 Arlington Expy., Jacksonville, FL 32211–7445, (904) 232–2640 X 108.

MSO Tampa, 155 Columbia Dr., Tampa, FL 33606–3598, (813) 228–2195.

MSO Savannah, Juliette G. Low Federal Bldg., 100 W. Oglethorpe Ave., Ste. 1017, Savannah, GA 31401, (912) 652–4353.

MSO Charleston, 196 Tradd St., Charleston, SC 29401–1899, (843) 724–7684.
MSO San Juan, P.O. Box 71526, San Juan, PR 00936–8626, Main Number: (787) 706–2400, (787) 706–2440.
MSO New Orleans, 1615 Poydras St., New Orleans, LA 70112–1254, (504) 589–4256.
MSO Morgan City, 800 David Dr., Morgan City, LA 70380–1304, (504) 380–5318.
MSO Corpus Christi, 555 North Carancahua, Ste. 500, Corpus Christi, TX 78478, (361) 888–3184.
MSO Houston-Galveston, P.O. Box 446, Galena Park, TX 77547–0446, (713) 671–5100.
MSO Mobile, 150 N. Royal St., Mobile, AL 36602, (334) 441–5196.
MSO Port Arthur, 2875 Jimmy Johnson Blvd., Port Arthur, TX 77640–2099, (409) 723–6509 X 248.
MSO St. Louis, 1222 Spruce St., Ste. 8–104E, St. Louis, MO 63103–2835, Main Number: (314) 539–3091.
MSO Huntington, 1415 6th Ave., Huntington, WV 25701–2420, Main Number: (304) 529–5524.
MSO Louisville, 600 Martin Luther King, Jr. Pl., Room 360, Louisville, KY 40202–2230, (502) 582–5194 X 39.
MSO Memphis, 200 Jefferson Ave., Ste. 1301, Memphis, TN 38103–2300, (901) 544–3941 X 226.
MSO Paducah, 225 Tully St., Paducah, KY 42003–1582, (270) 442–1621 X308.
MSO Pittsburgh, Kossman Bldg., Ste. 1150, 100 Forbes Ave., Pittsburgh, PA 15222–1371, (412) 644–5808 X 115.
MSO Buffalo, 1 Fuhrmann Blvd., Buffalo, NY 14203, (716) 843–9574.
MSO Chicago, 215 W. 83rd St., Ste. D, Burr Ridge, IL 60521, (630) 986–2155.
MSO Cleveland, 1055 E. 9th St., Cleveland, OH 44114, (216) 937–0126.
MSO Detroit, 110 Mt. Elliott Ave., Detroit, MI 48207, (313) 568–9580.
MSO Duluth, 600 S. Lake Ave., Canal Park, Duluth, MN 55802–2352, (218) 720–5286.
MSO Milwaukee, 2420 S. Lincoln Memorial Dr., Milwaukee, WI 53207–1997, (414) 747–7155.
MSO Toledo, The Ohio Bldg., 420 Madison Ave., Ste. 700, Toledo, OH 43604–1209, (419) 259–6372.
MSO/Group Sault Ste. Marie, 337 Water St., Sault Ste. Marie, MI 49783, (906) 635–3223.
MSO/Group Los Angeles/Long Beach, 1001 S. Seaside Ave., Bldg. 20, San Pedro, CA 90731, (310) 732–7380.
MSO San Diego, 2716 N. Harbor Dr., San Diego, CA 92101–1064, (619) 683–6477.
MSO San Francisco Bay, Bldg. 14, Coast Guard Island, Alameda, CA 94501–5100, (510) 437–3082.
MSO Puget Sound, 1519 Alaskan Way South, Bldg. 1, Seattle, WA 98134–1192, (206) 217–6232.
MSO/Group Portland, 6767 N. Basin Ave., Portland, OR 97217–3992, (503) 240–9317.
MSO Honolulu, 433 Ala Moana Blvd., Honolulu, HI 96813–4909, (808) 522–8260.
MARSEC/MSO Guam, PSC 455, Box 176, FPO AP, 96540–1056, (671) 339–2001X164.
MSO Juneau, 2760 Sherwood Lane, Ste. 2A, Juneau, AK 99801–8545, Main Number: (907) 463–2457.
MSO Anchorage, 510 L Street, Ste. 100, Anchorage, AK 99501–1946, (907) 271–6724.
MSO Prince William Sound (Valdez), 105 South Clifton, Valdez, AK 99686–0486, Main Number: (907) 835–7205.

FOR FURTHER INFORMATION CONTACT: For questions on Area Maritime Security Advisory Committees, contact Lieutenant Junior Grade Holly Wendelin at 202–267–4132. For questions about AMS Committee Charters, contact your local Captain of the Port using the information listed in the **ADDRESSES** section above.

SUPPLEMENTARY INFORMATION:

Establishment of Area Maritime Security Advisory Committees

Section 102 of the Maritime Transportation Security Act (MTSA) of 2002 (Pub. L. 107–295) added section 70112 to Title 46 of the U.S. Code, and authorizes the Secretary of the Department in which the Coast Guard is operating to establish Area Maritime Security Advisory Committees (AMS Committees) for any port area of the United States. The MTSA includes a provision exempting these AMS Committees from the Federal Advisory Committee Act (FACA), Public Law 92–436, 86 Stat. 470 (5 U.S.C. App.2).

The AMS Committees shall assist the Captain of the Port in the development, review, and update of the AMS Plan for their area of responsibility. Such matters may include, but are not limited to:

- Identifying critical port infrastructure and operations;
- Identifying risks (threats, vulnerabilities, and consequences);
- Determining mitigation strategies and implementation methods;
- Developing and describing the process to continually evaluate overall port security by considering consequences and vulnerabilities, how they may change over time, and what additional mitigation strategies can be applied; and
- Providing advice to, and assisting the Captain of the Port in, developing the Area Maritime Security Plan.

We anticipate that each AMS Committee will meet more than once a year. Subcommittees of each AMS Committee may also meet between meetings of the parent committee. AMS Committee meeting locations will be established by the cognizant Captain of the Port.

AMS Committee Membership

At least seven of the members of each AMS Committee must have at least 5 years of experience related to maritime or port security operations. Total number of members will be determined by the cognizant COTP. The COTP will also determine whether to have multiple AMS Committees for those COTP zones with separate, distinct port areas. Applicants may be required to pass an appropriate security background check prior to appointment to the committee.

Members' terms of office will be for 5 years; however, to permit orderly turnover of the committee's membership, the initial terms of office will be staggered, and the members initially appointed to AMS Committees will be appointed to terms of 3, 4 or 5 years. Members will be eligible to serve an additional term of office. Members will not receive any salary or other compensation for their service on an AMS Committee.

In support of the policy of the U.S.C.G. on gender and ethnic diversity, we encourage qualified women and members of minority groups to apply.

Request for Applications

Those seeking membership are not required to submit formal applications to the local COTP, however, because we do have an obligation to ensure that a specific number of members have the prerequisite maritime security experience, we encourage the submission of resumes highlighting experience in the maritime and security industries.

Dated: December 22, 2003.

L.L. Hereth,

Rear Admiral, U.S. Coast Guard, Director of Port Security.

[FR Doc. 03–32081 Filed 12–30–03; 8:45 am]

BILLING CODE 4910–15–U

DEPARTMENT OF HOMELAND SECURITY

Coast Guard

[USCG–2003–16696]

Pollution Prevention Equipment; Standards for Approval

AGENCY: Coast Guard, DHS.

ACTION: Notice of policy.

SUMMARY: The Coast Guard will consider alternative testing standards, including but not limited to standards in International Maritime Organization (IMO) resolutions MEPC.107(49) and MEPC.108(49), for approval of oil-water separators, bilge monitors, cargo monitors and bilge alarms, and for the designation of laboratories as approved facilities to conduct tests on this pollution prevention equipment (PPE). The standards in these resolutions will come into force internationally in 2005 and will replace existing international standards reflected in current PPE Coast Guard regulations.

DATES: This policy is effective December 31, 2003. Comments and related material must reach the Docket Management Facility on or before March 30, 2004.

ADDRESSES: You may submit comments identified by Coast Guard docket number USCG–2003–16696 to the Docket Management Facility at the U.S. Department of Transportation. To avoid duplication, please use only one of the following methods:

(1) *Web Site: http://dms.dot.gov.*

(2) *Mail:* Docket Management Facility, U.S. Department of Transportation, 400 Seventh Street SW., Washington, DC 20590–0001.

(3) *Fax:* 202–493–2251.

(4) *Delivery:* Room PL–401 on the Plaza level of the Nassif Building, 400 Seventh Street SW., Washington, DC, between 9 a.m. and 5 p.m., Monday through Friday, except Federal holidays. The telephone number is 202–366–9329. This notice and resolutions MEPC.107(49) and MEPC.108(49) are in docket USCG–2003–16696 and are available for inspection or copying at the Docket Management Facility, U.S. Department of Transportation, room PL–401, 400 Seventh Street SW., Washington, DC, between 9 a.m. and 5 p.m., Monday through Friday, except Federal holidays. You may also find this docket on the Internet at *http://dms.dot.gov.* ISO 9377–2 may be obtained for a fee through ISO's website *http://www.iso.org.*

FOR FURTHER INFORMATION CONTACT: If you have questions on this notice, call Lieutenant George Grills, Systems Engineering Division, Office of Design and Engineering Standards, (202) 267–6640. If you have questions on viewing or submitting material to the docket, call Andrea M. Jenkins, Program Manager, Docket Operations, (202) 366–0271.

SUPPLEMENTARY INFORMATION:

Reason for Policy Notice

As a participant in the International Maritime Organization Marine Environmental Protection Committee (MEPC) that revised international pollution prevention equipment (PPE) performance, design and maintenance standards, the U.S. Coast Guard is aware of advances in PPE technology more capable of effectively processing emulsified oils, surfactants, and contaminants.

It is also aware that current Coast Guard PPE regulations, reflected in 46 CFR 162.050–39, require use of solvents, specifically carbon tetrachloride and Freon 113 (CFC 113), that are Class I ozone-depleting substances under the Clean Air Act amendments of 1990 (42 U.S.C. 7671a). Under the Montreal Protocol on Substances that Deplete the Ozone Layer, the production of these solvents is being phased out internationally.

The United States phased out the import and production of class I ozone-depleting substances effective January 1, 1996 (*see* 40 CFR 82.4, and 60 FR 24986, May 10, 1995). A provision known as a *de minimis* exception covering the use of these solvents in laboratories does not include the oil-in-water tests called for by 46 CFR 162.050–39 (*see* both Decision XI/15 of the Parties to the Montreal Protocol, and appendix G to 40 CFR part 82, subpart A). This situation leaves domestic and foreign manufacturers and testing laboratories looking for other options to measure oil content in water samples taken from PPE.

The MEPC tasked the subcommittee on Ship Design and Equipment with updating MEPC.60(33) adopted on October 30, 1992, and A.586(14) adopted on November 20, 1985, to specifically address the concerns with PPE performance and testing. Representatives of the U.S. government participated in the subcommittee's 46th session that resulted in draft guidelines for PPE that were presented to MEPC at its 49th session.

At that session, on July 18, 2003, MEPC approved resolutions MEPC.107(49) entitled ''Revised Guidelines and Specifications for Pollution Prevention Equipment for Machinery Space Bilges of Ships'' and MEPC.108(49) entitled ''Revised Guidelines and Specifications for Oil Discharge Monitoring and Control Systems for Oil Tankers'' to replace MEPC.60(33) and A.586(14) respectively. The new resolutions carry the same titles as those they will replace but these recently approved resolutions now reference ISO 9377–2, a new oil-in-water test standard developed by the International Organization for Standardization (ISO), that does not require the use of ozone-depleting solvents.

The United States is a party to the International Convention for the Prevention of Pollution from Ships, 1973, as modified by the Protocol of 1978 relating thereto (MARPOL 73/78, Annex I/II). Resolutions MEPC.60(33) and A.586(14) were created under MARPOL 73/78, Annex I/II. These two older resolutions will be superseded on January 1, 2005, but while they remain in force, the following sections in subpart 162.050 will continue to reflect their implementation:

§ 162.050–17 Separator test rig.

§ 162.050–19 Monitor and bilge alarm test rig.

§ 162.050–23 Separator: Approval tests.

§ 162.050–27 Cargo Monitor: Approval tests.

§ 162.050–31 Bilge Monitor: Approval tests.

§ 162.050–35 Bilge alarm: Approval tests.

§ 162.050–37(b) Vibration test.

§ 162.050–39 Measurement of oil content.

All other subpart 162.050 sections are either substantially the same as new resolutions MEPC.107(49) and MEPC.108(49) or contain a unique application.

The Coast Guard expects to publish in the **Federal Register** a proposal to revise 46 CFR subpart 162.050 to reflect the new standards called for in those resolutions. In the interim, PPE manufacturers seeking Coast Guard approval and laboratories applying for designation as an authorized facility, may consider using alternative testing standards to those in the subpart 162.050 sections listed above—including alternative standards in resolutions MEPC.107(49) and MEPC.108(49), that the Coast Guard may, in its discretion, determine ensure equivalent performance characteristics.

Commenting on Notice and Viewing Documents Referenced in It

If you wish to submit comments regarding this policy notice, please send them to the Docket Management Facility at the address under **ADDRESSES**. All comments received will be posted, without change, to *http://dms.dot.gov* and will include any personal information you have provided. We have an agreement with the Department of Transportation (DOT) to use the Docket Management Facility. Please see DOT's ''Privacy Act'' paragraph below.

Submitting comments: If you submit a comment, please include your name and address, and identify the docket number for this rulemaking (USCG–2003–16696). You may submit your comments and material by electronic means, mail, fax, or delivery to the Docket Management Facility at the address under **ADDRESSES**; but please submit your comments and material by only one means. If you submit them by mail or delivery, submit them in an unbound format, no larger than 8½ by 11 inches, suitable for copying and electronic filing. If you submit them by mail and would like to know that they reached the Facility, please enclose a stamped, self-addressed postcard or envelope.

Viewing comments and documents: To view comments, as well as documents mentioned in this preamble as being available in the docket, go to *http://dms.dot.gov* at any time and conduct a simple search using the docket number. You may also visit the Docket Management Facility in room PL–401 on the Plaza level of the Nassif Building, 400 Seventh Street SW., Washington, DC, between 9 a.m. and 5 p.m., Monday through Friday, except Federal holidays.

Privacy Act: Anyone can search the electronic form of all comments received into any of our dockets by the name of the individual submitting the comment (or signing the comment, if submitted on behalf of an association, business, labor union, etc.). You may review the Department of Transportation's Privacy Act Statement in the **Federal Register** published on April 11, 2000 (65 FR 19477), or you may visit *http://dms.dot.gov.*

Authority: 46 U.S.C. 3306, 3703, E.O. 11735, 38 FR 21243; 3 CFR, 1971–1975 Comp., p. 793; 46 CFR 159.001–7 and 159.005–7; Department of Homeland Security Delegation No. 0170.1.

Dated: December 12, 2003.

Joseph J. Angelo,

Director of Standards, Marine Safety, Security & Environmental Protection.

[FR Doc. 03–32078 Filed 12–30–03; 8:45 am]

BILLING CODE 4910–15–P

DEPARTMENT OF HOMELAND SECURITY

Federal Emergency Management Agency

Agency Information Collection Activities: Proposed Collection; Comment Request

AGENCY: Federal Emergency Management Agency, Emergency Preparedness and Response Directorate, Department of Homeland Security.

ACTION: Notice and request for comments.

SUMMARY: The Federal Emergency Management Agency, as part of its continuing effort to reduce paperwork and respondent burden, invites the general public and other Federal agencies to take this opportunity to comment on proposed continuing information collections. In accordance with the Paperwork Reduction Act of 1995 (44 U.S.C. 3506(c)(2)(A)), this notice seeks comments on two forms used by FEMA's National Emergency Training Center (NETC) to approve and coordinate the use of the NETC facility for extracurricular training activities.

SUPPLEMENTARY INFORMATION: NETC is a FEMA facility that houses the Emergency Management Institute (EMI) and the National Fire Academy (NFA). NETC provides training and educational programs for Federal, State, and local personnel in hazard mitigation, emergency response and preparedness, fire prevention and control, disaster response, and long-term disaster recovery. Special groups sponsored by EMI, NFA or other FEMA organizations may use NETC facilities to conduct activities closely related to and in direct support of their activities. Such groups include other Federal departments and agencies, groups chartered by Congress such as the American Red Cross, State and local governments, volunteer groups, and national and international associations representing State and local governments.

Collection of Information

Title: Approval and Coordination of Requirements to use NETC for Extracurricular Training Activities.

Type of Information Collection: Revision of a currently approved collection.

OMB Number: 1660–0029.

Form Numbers: FEMA Form 75–10, Request for Housing Accommodations; and FEMA Form 75–11, Request for Use of NETC Facilities.

Abstract: Data will be obtained from special groups that request to use NETC facilities for extracurricular training activities. Extracurricular training is training over and above regularly scheduled training sessions of NFA and EMI. The policy of NETC is to accommodate other training activities on a space-available basis at the Emmitsburg campus. In order for NETC to approve and schedule the use of its facilities, information must be provided by special group organizations. A written, e-mail or telephone request for use of NETC facilities is initially made to determine availability of the facilities. If space is available, the contact person for the special group must follow up by completing FEMA Form 75–11 to provide information on the number of participants, meals, and special requirements. The information is used to assign classrooms, schedule equipment, and arrange for food service.

Affected Public: Not-for-profit institutions; Federal Government; State, local or tribal government; individuals or households; and business or other for-profit.

Estimated Total Annual Burden Hours: 142 hrs.

FEMA forms	No. of respondents (A)	Frequency of response (B)	Hours per response (C) (minutes)	Annual burden hours (A × B × C) (hours)
75–10	1500	1	5	125
75–11	100	1	10	17
Total	1600	1	15	142

Comments: Written comments are solicited to (a) Evaluate whether the proposed data collection is necessary for the proper performance of the agency, including whether the information shall have practical utility; (b) evaluate the accuracy of the agency's estimate of the burden of the proposed collection of information, including the validity of the methodology and assumptions used; (c) enhance the quality, utility, and clarity of the information to be collected; and (d) minimize the burden of the collection of information on those who are to respond, including through

the use of appropriate automated, electronic, mechanical, or other technological collection techniques or other forms of information technology, *e.g.*, permitting electronic submission of responses. Comments should be received within 60 days of the date of this notice.

ADDRESSES: Interested persons should submit written comments to Muriel B. Anderson, Chief, Records Management Branch, Information Resources Management Division, Information Technology Services Directorate, Federal Emergency Management Agency, Emergency Preparedness and Response Directorate, Department of Homeland Security, 500 C Street, SW., Room 316, Washington, DC 20472; e-mail address: *InformationCollections @fema.gov;* or, facsimile (202) 646–3347.

FOR FURTHER INFORMATION CONTACT: Merril Sollenberger, Special Groups and Visitors Coordinator, U.S. Fire Administration, telephone number (301) 447–1179, facsimile number (301) 447–1366, or e-mail address: *merril.sollenberger@dhs.gov* for additional information. You may contact Ms. Anderson for copies of the proposed information collection.

Dated: December 22, 2003.

Edward W. Kernan,

Division Director, Information Resources Management Division, Information Technology Services Directorate.

[FR Doc. 03–32199 Filed 12–30–03; 8:45 am]

BILLING CODE 9110–17–P

DEPARTMENT OF HOMELAND SECURITY

Federal Emergency Management Agency

Pre-Disaster Mitigation Disaster Resistant University Grants

AGENCY: Federal Emergency Management Agency, Emergency Preparedness and Response Directorate, Department of Homeland Security.

ACTION: Notice of availability of Pre-Disaster Mitigation Disaster Resistant University grants.

SUMMARY: The Federal Emergency Management Agency (FEMA) gives notice of the availability of Pre-Disaster Mitigation (PDM) Disaster Resistant University (DRU) grants. FEMA will provide PDM funds to assist universities, through State and local governments, to implement a sustained pre-disaster natural hazard mitigation program to reduce overall risk to facilities, research assets, students and faculty.

These funds will be competitively awarded with a National priority of ensuring that program funds benefit a representative range of universities, based on hazard type, size, geography, and academic community served, which includes consideration of Historically Black Colleges and Universities and Tribal Colleges and Universities. Funds are available for hazard mitigation project and planning activities at universities that have demonstrated commitment to such activities through prior DRU efforts, and for planning and project activities for universities that have not undertaken DRU activities.

DATES: States, and federally recognized Indian Tribal governments that complete grant applications must submit them on paper to the appropriate FEMA Regional Office on or before midnight, eastern time, March 1, 2004. If the non-Federal cost share requirement cannot be met by the application deadline due to pending State and/or local legislative approval or fiscal year timelines, the Applicant still must submit the application by March 1, 2004, including a notation in the Budget Narrative and a letter to the FEMA Regional Director providing an explanation and stating that the cost share will be available by March 30, 2004. The Applicant must follow-up with a written certification to the FEMA Regional Director by March 30, 2004, to verify that non-Federal cost share funding is approved and available for immediate use if the application is selected by FEMA.

ADDRESSES: FEMA Regional Offices:

FEMA Region I—*Serving Maine, New Hampshire, Vermont, Rhode Island, Connecticut, and Massachusetts:* J.W. McCormack POCH Building, Boston, MA 02109.

FEMA Region II—*Serving New York, New Jersey, Puerto Rico, and the U.S. Virgin Islands:* 26 Federal Plaza, Rm. 1307, New York, NY 10278–0001.

FEMA Region III—*Serving the District of Columbia, Delaware, Maryland, Pennsylvania, Virginia, and West Virginia:* 1 Independence Mall, 6th Floor, 615 Chestnut Street, Philadelphia, PA 19106–4404.

FEMA Region IV—*Serving Alabama, Florida, Georgia, Kentucky, Mississippi, North Carolina, South Carolina, and Tennessee:* 3003 Chamblee Tucker Road, Atlanta, GA 30341.

FEMA Region V—*Serving Illinois, Indiana, Michigan, Minnesota, Ohio, and Wisconsin:* 536 S. Clark Street, 6th Floor, Chicago, IL 60605.

FEMA Region VI—*Serving Arkansas, Louisiana, New Mexico, Oklahoma, and Texas:* FRC 800 North Loop 288, Denton, TX 76209–3698.

FEMA Region VII—*Serving Iowa, Kansas, Missouri, and Nebraska:* 2323 Grand Avenue, Suite 900, Kansas City, MO 64108–2670.

FEMA Region VIII—*Serving Colorado, Montana, North Dakota, South Dakota, Utah, and Wyoming:* Denver Federal Center, Building 710, Box 25267, Denver, CO 80225–0267.

FEMA Region IX—*Serving Arizona, California, Hawaii, Nevada, the Territory of American Samoa, the Territory of Guam, and the Commonwealth of the Northern Mariana Islands:* 1111 Broadway, Suite 1200, Oakland, CA 94607–4052.

FEMA Region X—*Serving Alaska, Idaho, Oregon, and Washington:* Federal Regional Center, 130 228th Street, SW., Bothell, WA 98021–9796.

FOR FURTHER INFORMATION CONTACT: LaBrina Jones, Office of the Director/Administrator, Mitigation Division, FEMA, 500 C Street, SW., Room 404A, Washington, DC 20472, (202) 646–4331 or E-mail: *LaBrina.Jones@dhs.gov*.

SUPPLEMENTARY INFORMATION:

Authority and Appropriations

The PDM program was authorized by section 203 of the Robert T. Stafford Disaster Relief and Emergency Assistance Act (Stafford Act), 42 U.S.C. 5133, as amended by section 102 of the Disaster Mitigation Act of 2000 (DMA), Public Law 106–390, 114 Stat. 1552, to assist States and communities to implement a sustained pre-disaster natural hazard mitigation program to reduce overall risk to population, buildings and infrastructure, while also reducing reliance on funding from actual disaster declarations.

$150 million was made available for the PDM grant program under Consolidated Appropriations Resolution, 2003, Public Law 108–7, to be awarded generally on a competitive basis and without reference to State allocations, quotas, or other formula-based allocation of funds. A Notice of Funds Availability for the PDM planning grants was published on March 3, 2003, at 68 FR 10018. A Notice of Funds Availability for the PDM competitive grant program was published on July 7, 2003 at 68 FR 40284.

FEMA is now making available approximately $3.6 million of PDM funds as Disaster Resistant University (DRU) grants to State, local and Tribal governments for pre-disaster mitigation activities that benefit universities.

Background

PDM Disaster-Resistant University grants are intended to support efforts by universities to reduce and manage their vulnerability to hazards. Over the past decade, disasters have cost the Federal government, private insurers, and universities billions of dollars. These costs usually arise from losses due to such impacts as damage to university facilities, or education and research interruption. For example, the 1989 Loma Prieta earthquake caused Stanford University to spend over $300 million in building repairs over 10 years. The PDM DRU grant program provides a significant opportunity to raise risk awareness and to reduce the Nation's disaster losses at universities through pre-disaster mitigation planning, and the implementation of planned, pre-identified, cost-effective mitigation measures that are designed to reduce injuries, loss of life, and damage and destruction of property from all hazards, including damage to critical facilities, and research operations.

In FY 2000, under different funding authorities, FEMA selected six DRU pilot universities, which have made significant strides to ensure that their campuses are disaster resistant. For example, ''Building a Disaster Resistant University'' (Appendix A), a publication that was developed and revised by pilot universities in conjunction with FEMA, will serve as a guide for universities that seek to become disaster resistant. (Guide available at *www.fema.gov/fima/dru.shtm*).

To build on the success and mitigation efforts of the pilot initiative for DRU and to continue supporting past DRU efforts, FEMA is making PDM funds available specifically for mitigation benefiting universities, including awards of approximately $100,000 each for mitigation activities that benefit universities, and additional awards of up to $500,000 each for pre-disaster hazard mitigation activities that benefit universities that have demonstrated commitment to hazard mitigation through prior FEMA-assisted DRU efforts.

FEMA encourages Historically Black Colleges & Universities (HBCU) and Tribal Colleges & Universities (TCU) to participate in PDM DRU activities, and encourages States to facilitate HBCU and TCU opportunities to improve their disaster resistance through risk management tools and other mitigation activities, through their respective consortia or individually. FEMA also encourages pilot DRUs to build on previous mitigation efforts by identifying and implementing mitigation projects that reduce the risk of loss for the university.

Applicant Eligibility

Only the State emergency management agencies or a similar office (*i.e.*, the office that has emergency management responsibility) of the State, the District of Columbia, the U.S. Virgin Islands, the Commonwealth of Puerto Rico, Guam, American Samoa, and the Commonwealth of the Northern Mariana Islands, as well as Federally recognized Indian Tribal governments are eligible to apply to FEMA for assistance as Applicants under this program.

In keeping with the intent of FEMA's overall policy, ''Government-to-Government Relations with American Indian and Alaska Native Tribal Governments,'' published at 64 FR 2095, Jan. 12, 1999, Federally recognized Indian Tribal governments may choose to apply for PDM DRU grants either through the State as a Sub-Applicant or directly to FEMA as an Applicant. (This choice is independent of a designation under other FEMA grants and programs.) Some State regulations prohibit the State from acting as an Applicant for an Indian Tribe. In such cases, or if the Tribe chooses, the Tribal government may act as its own Applicant. However, when legally permitted, Indian Tribal governments are encouraged to continue existing relationships with the State as the Applicant.

Sub-Applicant Eligibility

Other State agencies, including State universities; federally recognized Indian Tribal governments; and local governments, to include State recognized Indian Tribes, authorized tribal organizations, and Alaska Native villages, are eligible to apply to the Applicant as Sub-Applicants. Private universities are not eligible to apply as Sub-Applicants; however, they may request an eligible entity to submit an application for their proposed activity on their behalf.

All Applicants and Sub-Applicants, or the community they are located within, must be participating in the National Flood Insurance Program (NFIP) if they have been identified through the NFIP as having a Special Flood Hazard Area (SFHA) (a Flood Hazard Boundary Map (FHBM) or Flood Insurance Rate Map (FIRM) has been issued). In addition, the community must not be on probation, suspended or withdrawn from the NFIP. If a State university in a SFHA is located within a community, and that community lacks jurisdiction to require the university to adopt floodplain management plans, the State in which the university is located must be in compliance with the floodplain management criteria in 44 CFR part 60.

Grant Application Process

Interested universities and potential Sub-Applicants should consult the official designated point of contact in their State or Tribe for more information pertaining to their application process.

It will be the Applicant's responsibility to determine which sub-applications will be included in their final application to FEMA. The Applicant also must prioritize the sub-applications included in its application to FEMA. FEMA will use the information transmitted to evaluate applications and make award decisions, monitor ongoing performance and manage the flow of Federal funds, and to closeout the grant award when all work is completed.

The Applicant will submit a paper application, which can be obtained from the FEMA Regional Office. The grant application should include:

- The Applicant's DUNS number. To obtain a DUNS number call 1–866–705–5711 or visit *www.dunandbradstreet.com.*
- Application for Federal Assistance, Standard Form 424;
- Budget Information—Construction Program, FEMA Form 20–15; or
- Budget Information—Non-Construction Program, FEMA Form 20–20;
- Budget Narrative explaining cost items that have been budgeted;
- Summary Sheet for Assurances and Certification, FEMA Form 20–16;
- Assurances—Non-Construction Program, FEMA Form 20–16A; or,
- Assurances—Construction Program, FEMA Form 20–16B;
- Certification Regarding Lobbying; Debarment, Suspension and Other Responsible Matters; and Drug-Free Workplace Requirements, FEMA Form 20–16C;
- Disclosure of Lobbying Activities, Standard Form LLL;
- Approved Indirect Cost Agreement, if applicable;
- Documentation for the hazard risk assessment determination. This is only required as part of mitigation planning sub-applications (see Supplemental Questions);
- Complete Benefit-Cost Analysis documentation for mitigation projects;
- Program Narrative for the sub-application for which PDM DRU funding is requested. The Applicant must priority rank each sub-application included in the Program Narrative based on the Applicant's mitigation plan. Only

one sub-application should be ranked per number 1, 2, 3, *etc.* The Program Narrative should include:

(1) Individual activity location and name of Sub-Applicant and university;

(2) Timeline/schedule for each activity;

(3) Individual activity costs, including Federal and non-Federal shares;

(4) Activity-specific scopes of work, including a list of properties, if applicable;

(5) Certification that the Applicant has evaluated the included activities, that they meet all PDM/DRU program eligibility criteria (see *www.fema.gov/fima/dru.shtm*), and that they will be implemented in accordance with 44 CFR part 13, Uniform Administrative Requirements for Grants and Cooperative Agreements to State and Local Governments;

(6) Responses to the Supplemental Questions for each Sub-Applicant activity for evaluation (Supplemental Questions are available for Applicants and Sub-Applicants on the FEMA website: *www.fema.gov/fima/dru.shtm*);

(7) For proposals for mitigation projects: Recommendations and documentation regarding the environmental review required by 44 CFR part 10, Environmental Considerations, and other applicable laws and executive orders, including responses to Established Questions and complete environmental/historic documentation (the environmental/historic Established Questions are available for Applicants and Sub-Applicants on the FEMA Web site: *www.fema.gov/fima/dru.shtm*); and

(8) For proposals benefiting a former university recipient of DRU assistance: A brief description of past DRU efforts, including:

- Appointment or selection of a DRU coordinator.
- Formation of a campus partnership committee to direct the DRU activities that includes university, private sector, and local officials.
- Performance of a risk assessment to define, evaluate and prioritize the loss reduction and management activities that address the natural hazards vulnerabilities on campus.
- Development and adoption of a strategic loss reduction and management plan.
- If applicable, communication of the university's risks and plans for managing them to stimulate partnerships, and associated DRU mitigation successes.
- If applicable, implementation of a strategic loss reduction plan that identified mitigation activities.

(9) Assurance that the sub-application is complete and addresses all program requirements including the Supplemental Questions, thereby meeting the program criteria outlined under section 203(g) of the Stafford Act.

National Priorities

For FY 2003 funds, FEMA has established a national priority of providing mitigation funds to benefit a representative range of universities, based on the type of hazard addressed, geography, size, and academic community served. This includes consideration of Historically Black Colleges & Universities (HBCU) and Tribal Colleges & Universities (TCU).

FEMA encourages HBCU and TCU to participate in PDM DRU activities, and encourages States to facilitate HBCU and TCU opportunities to improve their disaster resistance through risk management tools and other mitigation activities. Communicating with these universities via their respective consortia may be the most efficient and effective means of benefiting the university's mitigation efforts. There are 117 HBCU nationwide and 34 TCU. Such institutions may be relatively small, receive less research funding, and may generally have fewer resources. For example, according to the National Center for Education Statistics, total enrollment shown at any TCU for fall 1998 did not exceed 2000 students, and only three such institutions showed enrollment over 1000. Working with a consortium can maximize DRU mitigation benefits to these institutions. Through a university consortium, universities can share expertise among the consortium members, including other HBCU or TCU. A consortium may also facilitate decisions on the allocation of future resources and program direction.

In addition, FEMA encourages universities who have demonstrated mitigation through past DRU efforts to sustain the momentum of those efforts by taking the opportunity to identify mitigation projects for implementation that can build on mitigation planning and other activities they have already accomplished.

Eligible Activities and Associated Costs

General. Proposals must be for mitigation activities that benefit a university or universities. Proposals may be for mitigation planning activities or for mitigation projects, though proposals benefiting universities demonstrating mitigation planning through past DRU efforts must include a mitigation project.

DRU Mitigation Planning. Applicants and Sub-Applicants may request mitigation planning funds to assist universities and university consortia in mitigation planning, including delivery of mitigation planning workshops, the development of risk assessments, and the development of university mitigation plans that are consistent with the planning criteria outlined in 44 CFR 201.6(b-d). Examples of planning activities to address in a mitigation plan are as follows:

- Risk assessment: Identification of hazards and vulnerabilities, an estimation of potential losses to campus facilities;
- Identification of potential mitigation actions and their priority for implementation;
- Identification of methods to foster communication with neighboring jurisdictions regarding disaster mitigation through measures such as:

(a) University collaboration activities involving faculty and/or students,

(b) Use of campus facilities for posting emergency procedures,

(c) Disaster exercises on university grounds or in conjunction with the community;

- Identification of a broad range of sources for funding and technical assistance to sustain loss reduction and risk communication activities in the future; and
- Development of a Business Continuity Plan for central administrative, teaching, and research functions.

A university consortium may request funds to carry out ''model'' planning activities that would be used by members of the consortium. Multi-hazard mitigation planning must primarily focus on natural hazards but may also address hazards caused by non-natural forces.

Up to 10 percent of the funds requested in the sub-application may be used for information dissemination activities regarding cost-effective mitigation technologies in order to develop and maintain mutually beneficial partnerships among the DRU pilot universities, newly selected DRUs, and with underserved communities. Such activities should strive to promote a greater awareness of the institutional benefits of mitigation planning and to facilitate the implementation of appropriate mitigation actions. These activities may include outreach efforts and products (brochures and videos, *etc.*) related to the proposed mitigation activity that will help with the progress of the DRU universities and serve as models for other universities.

DRU Mitigation Projects. Multi-hazard mitigation projects must primarily focus on natural hazards but may also address hazards caused by non-natural forces. The following are eligible types of mitigation projects:

- Structural and non-structural retrofitting (including designs and feasibility studies when included as part of the construction project) for wildfire, seismic, wind or flood hazards (*e.g.*, elevation, storm shutters, hurricane clips—seismic bracing or reinforcement);
- Minor structural flood hazard control or protection projects that may include vegetation management, and stormwater management (*e.g.*, culverts, floodgates, retention basins); and
- Localized flood control projects, such as certain ring levees and floodwall systems, that are designed specifically to protect critical facilities and that do not constitute a section of a larger flood control system.

Mitigation projects must also meet the following general criteria:

(1) Be cost-effective and substantially reduce the risk of future damage, hardship, loss, or suffering resulting from a major disaster, consistent with 44 CFR 206.434(c)(5) and related guidance, and have a Benefit-Cost Analysis that results in a benefit cost ratio of at least 1.0. Mitigation projects without a Benefit-Cost Analysis or with a benefit-cost ratio less than 1.0 will not be considered for the PDM DRU grants. Mitigation projects with higher benefit-cost ratios will be more competitive. Applicants may use programs or mechanisms other than the FEMA benefit-cost model to conduct the Benefit-Cost Analysis; however the methodology used must be consistent with the FEMA benefit-cost model and approved in advance by FEMA. For more information, see general PDM DRU Program Grant Guidance at *www.fema.gov/fima/dru.shtm*;

(2) Be in conformance with the current FEMA-approved State hazard mitigation plan and any existing local or university mitigation plans;

(3) Solve a problem independently or constitute a functional portion of a solution where there is assurance that the project as a whole will be completed, consistent with 44 CFR 206.434(c)(4);

(4) Be in conformance with 44 CFR Part 9, Floodplain Management and Protection of Wetlands, 44 CFR part 10, Environmental Considerations. For more information, see general PDM DRU Program Grant Guidance at *www.fema.gov/fima/dru.shtm;*

(5) Not duplicate the assistance that another Federal agency or program has the primary authority to provide, consistent with 44 CFR 206.434(g);

(6) Be located in a community that (a) does not have a SFHA, or (b) is participating in the NFIP if the community has an identified SFHA (a FHBM or FIRM has been issued). The community must not be on probation, suspended or withdrawn from the NFIP; and

(7) Meet the requirements of Federal, State, and local laws.

Up to 10 percent of the funds requested in the project sub-application may be used for information dissemination activities regarding cost-effective mitigation technologies in order to develop and maintain mutually beneficial partnerships among the DRU pilot universities, newly selected DRUs, and with underserved communities. Such activities should strive to promote a greater awareness of the institutional benefits of mitigation planning and to facilitate the implementation of appropriate mitigation actions. These activities may include outreach (brochures and videos, *etc.*) related to the proposed mitigation project that will help with the progress of the DRU universities and serve as models for other universities.

Applicant Management Costs. Applicants are encouraged to consider how to maximize the amount of funds used directly to benefit the university. Applicants may request up to 10 percent of the total planning and project grant funding requested for management costs to support the solicitation, review and processing of PDM DRU sub-applications and awards, and to provide technical assistance to Sub-Applicants, including assisting Sub-applicants with Benefit-Cost Analysis and environmental and historic documentation. Care must be taken not to provide more technical assistance to one Sub-Applicant than another to avoid the appearance of pre-selection. If requested, indirect costs must be included as part of management costs and must be supported with a current Indirect Cost Rate approved by a Federal Cognizant Agency. However, in no case will the amount of funding awarded for management costs exceed 10 percent of the total amount awarded for mitigation planning and project sub-grants. There is no waiver to increase Applicant Management Costs.

Applicants that request management costs must submit a separate sub-application for their management costs. Management costs must be supported with source documentation. Management costs will not affect competitiveness of planning or project proposals submitted by the Applicant and do not need a Benefit-Cost Analysis. Funding for Applicant management costs will not be awarded until all planning and project sub-applications have been awarded to ensure that Applicant management costs do not exceed 10 percent of the total planning and project sub-grant awards. Management costs will be cost shared with up to 75 percent of eligible costs provided by FEMA and at least 25 percent provided by a non-Federal source to the maximum Federal share approved by FEMA.

Sub-Applicant Management Costs. Sub-Applicants may request a maximum of 5 percent of the total grant funding requested for management costs to support approved planning activities or projects. Sub-Applicant management costs must be supported with budget narrative clearly justifying all proposed costs. Sub-Applicant management costs must be included as part of the planning activity or project costs and, therefore, must be included in the Benefit-Cost Analysis for projects. If requested, indirect costs must be included as part of the Management Costs and must be supported with a current Indirect Cost Rate approved by a Federal Cognizant Agency. There is no waiver to increase Sub-Applicant Management Costs.

Ineligible Activities

Ineligible Mitigation Projects. The following mitigation projects are ineligible for the PDM program:

- Major flood control projects such as dikes, levees, floodwalls, seawalls, groins, jetties, dams, waterway channelization; beach nourishment or renourishment;
- Warning systems;
- Engineering designs that are not integral to a proposed project;
- Feasibility studies that are not integral to a proposed project;
- Drainage studies that are not integral to a proposed project;
- Generators that are not integral to a proposed project;
- Phased or partial projects;
- Flood studies or mapping; and
- Response and communication equipment.

Cost Overruns. The PDM DRU program is a competitive grant program and therefore award amounts are final. There are no cost overruns associated with this program.

Cost Share Requirement

FEMA will contribute up to 75 percent of the total amount approved under the grant award, to implement approved activities. At least 25 percent of the total approved under the grant award must be provided from a non-

Federal source. Grants awarded to small, impoverished communities may receive a Federal share of up to 90 percent of the total amount approved under the grant award, to implement eligible approved activities.

All non-Federal contributions, cash and in-kind, are accepted as part of the non-Federal share. Except as allowed by Federal statute, no other Federal funds can be used as a cost share. Requirements for in-kind contributions can be found in 44 CFR 13.24. In-kind contributions must be directly related to eligible program costs. The following documentation is required for third-party cash and in-kind contributions: record of source of donor, dates, rates, amounts, and deposit slips for cash contributions.

Evaluation and Award Processes

National Evaluation. Disaster Resistant University mitigation proposals for PDM DRU grants will be evaluated and selected based on the following considerations (each applies to all proposals, unless specified for ''planning activities'' or ''projects''). The specific factors will carry more weight than the general criteria.

• The extent to which the proposal benefits a university (or universities) that demonstrates the following general criteria:

(1) Top level commitment to the concept of disaster resistance (Chancellor, President, *etc.*)

(2) Capability to successfully carry out proposed mitigation activities and initiatives (*i.e.*, expertise to carry out the relevant studies and assessments of hazards and risk, their impacts on its facilities, and project implementation);

(3) For proposals benefiting former DRU universities, commitment to sustained mitigation demonstrated through past and ongoing DRU efforts, such as the selection of a DRU coordinator, partnering efforts, risk assessment and risk reduction planning activities, outreach and implementation of mitigation activities.

• The extent to which the proposal addresses the following specific factors, listed in order of importance, are:

(1) For mitigation planning activities, the university's assessment of risks by hazard (see Supplemental Questions);

(2) For mitigation projects,

a. Benefit-Cost ratio by hazard based on Applicant's Benefit-Cost Analysis;

b. Whether the project protects critical facilities;

c. Consistency with the State mitigation plan and any existing local/Tribal and university mitigation plans;

d. Consistency with Federal laws and Executive Orders to include National Environmental Policy Act, National Historic Preservation Act, Clean Water Act, Floodplain Management, and Seismic Safety of Federal Buildings; and Federal programs such as American Heritage Rivers Initiative, SBA Disaster Loan Program and EPA Watershed Initiative;

(3) The priority given to the sub-application by the Applicant;

(4) Overall size and proportion of university population that will benefit, such as:

a. Number of university employees and university-employer's rank (largest, second largest, *etc.* employer) in the community

b. Value of goods and services purchased by university within the community

c. University budget

d. Total economic impact of university on community—indicate the effect university would have on community if a disaster strikes (major job shortage, loss of medical services, *etc.*);

(5) Feasibility of methodology and outcome;

(6) Implementation involves reasonable timeline and expectations;

(7) Leverages State and local community involvement through partnerships;

(8) Identifies appropriate outreach activities that advance mitigation;

(9) Serves as a model for other universities;

(10) Innovation and creativity used as part of the best available options;

(11) Status of State/Tribal mitigation plans

(12) For community Sub-Applicants:

a. Status of the Sub-Applicant as a small, impoverished community.

b. Community mitigation factors, such as community incentives (tax credits, waiver of building permit fees, and building codes), Community Rating System class, Cooperating Technical Partner, participation as a Firewise Community, and adoption of codes to include Building Code Effectiveness Grading Schedule, International Code Series and National Fire Protection Association 5000 Code.

In making its selections, FEMA will also consider the PDM DRU National Priorities for FY 2003 funds. This includes mitigating a representative range of universities based on type of hazard addressed, geography, size, and academic community served, which includes consideration of Historically Black Colleges & Universities (HBCU) and Tribal Colleges & Universities (TCU). It also includes sustaining and building on prior DRU efforts through mitigation projects that reduce the risk of loss for past DRU universities.

Selection/Award. For FY 2003 PDM DRU grants, awards will be governed by Consolidated Appropriations Resolution, 2003, Public Law 108–7, section 203 of the Stafford Act, as amended by section 102 of the DMA, this notice, and PDM DRU program guidance, which will be made available to the public on the FEMA Web site: *www.fema.gov/fima/dru.shtm*.

The Headquarters Approving Federal Official shall consider the National Evaluation criteria and factors listed above, the National priorities, and other pertinent information to determine which sub-applications to approve. After the sub-applications are selected, FEMA Regional offices will work with Applicants whose sub-applications are selected to implement the grant award.

Environmental/Historic Preservation Review Process

FEMA has determined, in accordance with 44 CFR 10.8 (d)(2)(iii), that mitigation planning activities have no impact on the environment and will require no further environmental or historic preservation review. However, mitigation projects will require environmental/historic preservation review. Construction type activities usually require more extensive review, or even an environmental assessment with alternatives addressed, historic preservation consultation, or both. For selected mitigation projects that require any level of environmental/historic preservation review, FEMA will not award the grant and the Applicant may not initiate construction until FEMA has completed its review. FEMA will complete the environmental and historic preservation review with the assistance of both the Applicant and the Sub-Applicant.

If after review of the responses to the established environmental/historic questions, supporting documentation, and the consultations with regulatory/resource agencies, FEMA determines that certain compliance measures are required to address the environmental/historic impacts of a selected project, FEMA will notify the Applicant. The Applicant or Sub-Applicant may determine whether or not to accept the grant award based on the estimated additional cost of the compliance measures. The amount of the Federal share will not be increased to cover any additional costs. Therefore, it is essential that at the time of the application submission, Applicants and Sub-Applicants include costs associated with any anticipated environmental/historic preservation compliance measures or alternatives identified through the development of the

environmental/historic preservation documentation in the project budget.

Reporting Requirements

The following report is required from universities that receive PDM DRU FY 03 funds:

• *Self-Assessment*: University recipients are to include a detailed self-assessment at the end of the year (December 2004) that highlights best practices, issues, and ways to improve the PDM DRU grant program.

The following reports are required from Applicants that are awarded PDM DRU grants (Grantees):

• *Federal Cash Transaction Reports*: If the Grantee uses the U.S. Department of Health and Human Services (HHS) Payment Management System-SMARTLINK, the Grantee shall submit a copy of the PMS 272 Cash Transaction Report submitted to HHS and to FEMA, as well.

• *Financial Status Reports*: The Grantee shall submit Financial Status Reports, SF 269 or FF 20–10, to the FEMA regional office within 30 days from the end of the first Federal quarter following the initial grant award. The Regional Director may waive this initial report. The Grantee shall submit quarterly financial status reports thereafter until the grant ends. Reports are due on January 30, April 30, July 30, and October 30.

• *Performance Reports:*

(1) The Grantee shall submit performance reports (no format requirements) to the FEMA Regional Office within 30 days after end of each quarter. Reports are due January 30, April 30, July 30 and October 30.

(2) Quarterly performance reports shall consist of a comparison of actual accomplishment of the approved activity and report the name, completion status, expenditure, and payment-to-date of each approved activity/sub-grant award under the Grant Award.

• *Final Reports:* The Grantee shall submit a Final Financial Status Report and Performance Report within 90 days from Grant Award Performance Period expiration date, per 44 CFR 13.50.

• *Enforcement:* In reference to 44 CFR 13.43 Enforcement, the Regional Director may suspend drawdowns from the HHS/Payment Management System-SMARTLINK or take other remedial actions for non-compliance if quarterly performance reports are not submitted.

Dated: December 22, 2003.

Anthony S. Lowe,

Mitigation Division Director, Emergency Preparedness and Response Directorate, Department of Homeland Security.

[FR Doc. 03–32020 Filed 12–30–03; 8:45 am]

BILLING CODE 9110–13–P

DEPARTMENT OF HOMELAND SECURITY

Transportation Security Administration

[Docket No. TSA–2003–16345]

Notice Requesting Comment on the Imposition of the Aviation Security Infrastructure Fee; Extension of Comment Period

AGENCY: Transportation Security Administration (TSA), DHS.

ACTION: Notice; extension of comment period.

SUMMARY: This document extends the comment period for a notice that was published on November 5, 2003. In that notice, the TSA requested comments on possible changes to the way it sets the Aviation Security Infrastructure Fee (ASIF), which is a fee imposed on air carriers and foreign air carriers to help pay the Government's costs of providing civil aviation security services. The public comment period was to expire on January 5, 2004. This document extends the public comment period on the notice for an additional 30 days, until February 5, 2004. This extension is a result of a request from the Air Transport Association.

DATES: Submit comments by February 5, 2004.

ADDRESSES: *Comments Submitted by Mail or In Person:* Address written, signed comments to the Docket Management System, U.S. Department of Transportation, Room Plaza 401, 400 Seventh Street, SW, Washington, DC 20590–0001.

Comments that include trade secrets, confidential commercial or financial information, or sensitive security information (SSI) should not be submitted to the public regulatory docket. Please submit such comments separately from other comments. Comments containing trade secrets, confidential commercial or financial information, or SSI should be appropriately marked as containing such information and submitted by mail to the individual listed in **FOR FURTHER INFORMATION CONTACT.**

Comments Filed Electronically: You may also submit comments through the Internet at *http://dms.dot.gov.* Please be aware that anyone is able to search the electronic form of all comments received into any of these dockets by the name of the individual submitting the comment (or signing the comment, if submitted on behalf of an association, business, labor union, etc.). You may review the applicable Privacy Act Statement in the **Federal Register** published on April 11, 2000, (65 FR 19477) or you may visit *http://dms.dot.gov.*

Reviewing Comments In the Docket: All submissions to the public docket may be viewed in person in the Dockets Office between 9 a.m. and 5 p.m., Monday through Friday, except Federal holidays. The Dockets Office is on the plaza level of the NASSIF Building at the Department of Transportation at the above address. Also, you may review public dockets on the Internet at *http://dms.dot.gov.*

See **SUPPLEMENTARY INFORMATION** for format and other information about comment submissions.

FOR FURTHER INFORMATION CONTACT: Randall Fiertz, Office of Revenue, Transportation Security Administration Headquarters, West Building, Floor 5, TSA–14, 601 South 12th Street, Arlington, VA 22202; e-mail: *TSA-Fees@dhs.gov,* telephone: 571–227–2323.

SUPPLEMENTARY INFORMATION:

Comments Invited

The TSA invites interested persons to submit written comments, data, or views on the issues described in this notice, including comments relating to the economic, environmental, energy, or federalism impacts. See **ADDRESSES** above for information on where to submit comments.

Do not submit to the public regulatory docket any comments that you believe include trade secrets, confidential commercial or financial information, or sensitive security information (SSI) governed by 49 CFR part 1520. Such comments should be appropriately marked as containing such information and submitted by mail to the individual listed in **FOR FURTHER INFORMATION CONTACT.** When a commenter properly designates and submits confidential commercial or financial information or information the submitter considers to be a trade secret, TSA does not place it in the public docket and TSA will handle it in accordance with applicable safeguards and restrictions on access. TSA will hold it in a separate file to which the public does not have access, and place a note in the public docket that TSA has received such materials from the commenter. If TSA receives a request to examine or copy this

information, TSA would treat the request as any other request under the Freedom of Information Act (FOIA) (5 U.S.C. 552) and the Department of Homeland Security's FOIA regulation found in 6 CFR part 5.

With each comment, please include your name and address, identify the docket number at the beginning, and give the reason for each comment, including any supporting data. You may submit comments and material electronically, in person, or by mail as provided under **ADDRESSES,** but please submit your comments and material by only one means. If you submit comments by mail or delivery, submit them in two copies, in an unbound format, no larger than 8.5 by 11 inches, suitable for copying and electronic filing.

If you want the TSA to acknowledge receipt of your comments, include with your comments a self-addressed, stamped postcard on which the docket number appears. We will stamp the date on the postcard and mail it to you.

Except for comments properly submitted as containing confidential information or SSI, we will file in the public docket all comments we receive. The docket is available for public inspection before and after the comment closing date.

We will consider all comments we receive on or before the closing date for comments. We will consider comments filed late to the extent practicable.

Document Availability

You can get an electronic copy using the Internet by—

(1) Searching the Department of Transportation's electronic Docket Management System (DMS) web page (*http://dms.dot.gov/search*);

(2) Accessing the Government Printing Office's web page at *http://www.access.gpo.gov/su_docs/aces/aces140.html;* or

(3) Visiting the TSA's Law and Policy web page at *http://www.tsa.dot.gov/public/index.jsp.*

In addition, copies are available by writing or calling the individual in the **FOR FURTHER INFORMATION CONTACT** section. Make sure to identify the docket number.

Background

On November 5, 2003, TSA published a ''Notice Requesting Comment on the Imposition of the Aviation Security Infrastructure Fee'' (68 FR 62613). Comments to that document were to be received on or before January 5, 2004. By a letter dated December 17, 2003, the Air Transport Association (ATA) requested that TSA extend the comment period on the notice for 30 days. ATA stated that, considering the potential substantive impact of changing the current fee methodology on their membership, it requested more time to adequately develop its comments by conducting a survey of its members so that it can provide TSA with a consensus proposal.

Extension of Comment Period

TSA has considered ATA's request and has determined that ATA has shown a substantive interest in the notice and good cause for the extension. TSA has determined that an extension of the comment period is consistent with the public interest, and that good cause exists for taking this action. Accordingly, TSA has decided to extend the public comment period on the notice for an additional 30 days. The deadline for the public to submit comments on the notice now is February 5, 2004. TSA does not anticipate any additional extensions of the public comment period for this notice.

Issued in Arlington, VA, on December 19, 2003.

Robert Gardner,

Assistant Administrator for Finance and Administration.

[FR Doc. 03–32196 Filed 12–30–03; 8:45 am]

BILLING CODE 4910–62–P

DEPARTMENT OF HOUSING AND URBAN DEVELOPMENT

[Docket No. 4817–N–21]

Notice of Proposed Information Collection for Public Comment for Housing Choice Voucher (HCV) Family Self-Sufficiency (FSS) Program Coordinator Funding Application Form

AGENCY: Office of the Assistant Secretary for Public and Indian Housing, HUD.

ACTION: Notice.

SUMMARY: The proposed information collection requirement described below will be submitted to the Office of Management and Budget (OMB) for review, as required by the Paperwork Reduction Act. The Department is soliciting public comments on the subject proposal.

DATES: *Comments Due Date:* January 30, 2004.

ADDRESSES: Interested persons are invited to submit comments regarding this proposal. Comments should refer to the proposal by name and/or OMB Control Number and should be sent to: Mildred M. Hamman, Reports Liaison Officer, Public and Indian Housing, Department of Housing & Urban Development, 451—7th Street, SW, Room 4255, Washington, DC 20410–5000.

FOR FURTHER INFORMATION CONTACT: Mildred M. Hamman, (202) 708–0614, extension 4128. (This is not a toll-free number). For hearing- and speech-impaired persons, this telephone number may be accessed via TTY (Text telephone) by calling the Federal Information Relay Services at 1–800–877–8339 (toll-free).

SUPPLEMENTARY INFORMATION: The Department will submit the proposed information collection to OMB for review, as required by the Paperwork Reduction Act of 1995 (44 U.S.C. Chapter 35, as amended).

The purpose of the Housing Choice Voucher FSS program is to promote the development of local strategies to coordinate the use of assistance under the Housing Choice Voucher program with public and private resources to enable participating families to achieve economic independence and self-sufficiency. As a result of their participation in the FSS program, many families have achieved stable, well-paid employment, which has made it possible for them to become homeowners. An FSS program coordinator assures that program participants are linked to supportive services they need to achieve self-sufficiency. Eligible Public Housing Agencies (PHAs) can apply for Housing Choice Voucher FSS Program Coordinator funding.

This notice is soliciting comments from members of the public and affected agencies concerning the proposed collection of information to: (1) Evaluate whether the proposed collection of information is necessary for the proper performance of the functions of the agency, including whether the information will have practical utility; (2) evaluate the accuracy of the agency's estimate of the burden of the proposed collection of information; (3) enhance the quality, utility, and clarity of the information to be collected; and (4) minimize the burden of the collection of information on those who are to respond; including through the use of appropriate automated collection techniques or other forms of information technology, *e.g.,* permitting electronic submissions of responses.

This Notice also lists the following information:

Title of Proposal: Housing Choice Voucher (HCV) Family Self-Sufficiency (FSS) Program Coordinators Funding Application Form.

OMB Control Number: 2577–0178.

Description of the Need for the Information and Proposed Use: HUD will announce the availability of funds to employ program coordinators for the Housing Choice Voucher FSS program. Eligible applicants, Public Housing Agencies (PHAs), will complete and submit the funding form to HUD providing general information about the PHA. For renewal HCV FSS PHAs, the application funding form requests program status and accomplishments, and funding/positions requested. For new HCV FSS PHA applicants, the application funding form requests FSS Action Plan information and position/salaries requested. HUD will use the following form information to determine which applicants will receive HCV FSS Coordinator funding.

Agency form numbers: (To be assigned).

Members of the Affected Public: State, Local or Tribal Governments.

Estimation including the Total Number of Hours Needed to Prepare the Information Collection for the Number of Respondents, Frequency of response, and hours of response: 800 applicants, annually, one response per applicant, 45 minutes per response, 600 total burden hours.

Status of the Proposed Information Collection: Revision.

Authority: Section 3506 of the Paperwork Reduction Act of 1995, as amended.

Dated: December 19, 2003.

Michael Liu,

Assistance Secretary for Public and Indian Housing.

[FR Doc. 03–32022 Filed 12–30–03; 8:45 am]

BILLING CODE 4210–72–M

DEPARTMENT OF HOUSING AND URBAN DEVELOPMENT

[Docket No. FR–4815–N–107]

Notice of Submission of Proposed Information Collection to OMB: Rent Schedule—Low Rent Housing

AGENCY: Office of the Chief Information Officer, HUD.

ACTION: Notice.

SUMMARY: The proposed information collection requirement described below has been submitted to the Office of Management and Budget (OMB) for review, as required by the Paperwork Reduction Act. The Department is soliciting public comments on the subject proposal.

HUD is requesting approval to continue to collect information necessary to ensure that approved rent levels are not exceeded and tenants are not overcharged. HUD establishes and approves project rental charges and utility allowances. Owners may request adjustments by submitting justifying information. Owners must notify tenants of approved rents.

DATES: *Comments Due Date:* January 30, 2004.

ADDRESSES: Interested persons are invited to submit comments regarding this proposal. Comments should refer to the proposal by name and OMB approval number (2502–0012) and should be sent to: Lauren Wittenberg, OMB Desk Officer, Office of Management and Budget, Room 10235, New Executive Office Building, Washington, DC 20503; Fax number (202) 395–6974; E-mail *Lauren_Wittenberg@omb.eop.gov.*

FOR FURTHER INFORMATION CONTACT: Wayne Eddins, Reports Management Officer, AYO, Department of Housing and Urban Development, 451 Seventh Street, Southwest, Washington, DC 20410; e-mail *Wayne_Eddins@HUD.gov;* telephone (202) 708–2374. This is not a toll-free number. Copies of the proposed forms and other available documents submitted to OMB may be obtained from Mr. Eddins or on HUD's Web site at *http://www.hud.gov:63001/po/i/icbts/collectionsearch.cfm.*

SUPPLEMENTARY INFORMATION: The Department has submitted the proposal for the collection of information, as described below, to OMB for review, as required by the Paperwork Reduction Act (44 U.S.C. Chapter 35). The Notice lists the following information: (1) The title of the information collection proposal; (2) the office of the agency to collect the information; (3) the OMB approval number, if applicable; (4) the description of the need for the information and its proposed use; (5) the agency form number, if applicable; (6) what members of the public will be affected by the proposal; (7) how frequently information submissions will be required; (8) an estimate of the total number of hours needed to prepare the information submission including number of respondents, frequency of response, and hours of response; (9) whether the proposal is new, an extension, reinstatement, or revision of an information collection requirement; and (10) the name and telephone number of an agency official familiar with the proposal and of the OMB Desk Officer for the Department.

This Notice also lists the following information:

Title of Proposal: Rent Schedule—Low Rent Housing.

OMB Approval Number: 2502–0012.

Form Numbers: HUD–92458.

Description of the Need for the Information and its Proposed Use: HUD is requesting approval to continue to collect information necessary to ensure that approved rent levels are not exceeded and tenants are not overcharged. HUD establishes and approves project rental charges and utility allowances. Owners may request adjustments by submitting justifying information. Owners must notify tenants of approved rents.

Respondents: Not-for-profit institutions, State, Local or Tribal Government.

	Number of respondents	Annual responses	×	Hours per response	=	Burden hours
Reporting Burden:	16,000	16,000		0.33		5,280

Total Estimated Burden Hours: 135.

Status: Extension of a currently approved collection.

Authority: Section 3507 of the Paperwork Reduction Act of 1995, 44 U.S.C. 35, as amended.

Dated: December 18, 2003.

Wayne Eddins,

Departmental Reports Management Officer, Office of the Chief Information Officer.

[FR Doc. 03–32023 Filed 12–30–03; 8:45 am]

BILLING CODE 4210–72–P

DEPARTMENT OF HOUSING AND URBAN DEVELOPMENT

[Docket No. FR–4815–N–108]

Notice of Submission of Proposed Information Collection to OMB: HOPE VI Grant Program

AGENCY: Office of the Chief Information Officer, HUD.

ACTION: Notice.

SUMMARY: The proposed information collection requirement described below has been submitted to the Office of Management and Budget (OMB) for review, as required by the Paperwork Reduction Act. The Department is soliciting public comments on the subject proposal.

HUD is requesting approval to continue to collect information from Public Housing Agencies (PHAs) necessary to administer the HOPE IV Grant Program. Much of the information collection is now formatted on the forms listed here. A Community and Supportive Services Workplan has been added the requirement.

DATES: *Comments Due Date:* January 30, 2004.

ADDRESSES: Interested persons are invited to submit comments regarding this proposal. Comments should refer to the proposal by name and OMB approval number (2577–0208) and should be sent to: Lauren Wittenberg, OMB Desk Officer, Office of Management and Budget, Room 10235, New Executive Office Building, Washington, DC 20503; Fax number (202) 395–6974; E-mail *Lauren_Wittenberg@omb.eop.gov.*

FOR FURTHER INFORMATION CONTACT: Wayne Eddins, Reports Management Officer, AYO, Department of Housing and Urban Development, 451 Seventh Street, Southwest, Washington, DC 20410; e-mail *Wayne_Eddins@HUD.gov;* telephone (202) 708–2374. This is not a toll-free number. Copies of the proposed forms and other available documents submitted to OMB may be obtained from Mr. Eddins or on HUD's Web site at *http://www.hud.gov:63001/po/i/icbts/collectionsearch.cfm.*

SUPPLEMENTARY INFORMATION: The Department has submitted the proposal for the collection of information, as described below, to OMB for review, as required by the Paperwork Reduction Act (44 U.S.C. Chapter 35). The Notice lists the following information: (1) The title of the information collection proposal; (2) the office of the agency to collect the information; (3) the OMB approval number, if applicable; (4) the description of the need for the information and its proposed use; (5) the agency form number, if applicable; (6) what members of the public will be affected by the proposal; (7) how frequently information submissions will be required; (8) an estimate of the total number of hours needed to prepare the information submission including number of respondents, frequency of response, and hours of response; (9) whether the proposal is new, an extension, reinstatement, or revision of an information collection requirement; and (10) the name and telephone number of an agency official familiar with the proposal and of the OMB Desk Officer for the Department.

This Notice also lists the following information:

Title of Proposal: Rent Schedule—Low Rent Housing.

OMB Approval Number: 2577–0208.

Form Numbers: HUD 52825–A, HUD 52860–A, HUD–52774, HUD–52775, HUD–52780, HUD–52785, HUD–52787, HUD–52789, HUD–52790, HUD–52797, HUD–52798, HUD–52799, HUD–52800, HUD–53001.

Description of the Need for the Information and Its Proposed Use: HUD is requesting approval to continue to collect information from Public Housing Agencies (PHAs) necessary to administer the HOPE IV Grant Program. Much of the information collection is now formatted on the forms listed here. A Community and Supportive Services Work plan has been added to the requirement.

Respondents: Not-for-profit institutions, State, Local or Tribal Government.

Frequency of Submission: On occasion, Annually, Quarterly.

	Number of respondents	Annual responses	×	Hours per response	=	Burden hours
Reporting Burden	16,000	16,000		0.33		37,380

Total Estimated Burden Hours: 37,380.

Status: Revision of a currently approved collection.

Authority: Section 3507 of the Paperwork Reduction Act of 1995, 44 U.S.C. 35, as amended.

Dated: December 19, 2003.

Wayne Eddins,

Departmental Reports Management Officer, Office of the Chief Information Officer.

[FR Doc. 03–32024 Filed 12–30–03; 8:45 am]

BILLING CODE 4210–72–P

DEPARTMENT OF HOUSING AND URBAN DEVELOPMENT

[Docket No. FR–4815–N–109]

Notice of Submission of Proposed Information Collection to OMB: Comprehensive Needs Assessment (CNAs)

AGENCY: Office of the Chief Information Officer, HUD.

ACTION: Notice.

SUMMARY: The proposed information collection requirement described below has been submitted to the Office of Management and Budget (OMB) for review, as required by the Paperwork Reduction Act. The Department is soliciting public comments on the subject proposal.

HUD is requesting approval to continue to collect information for Comprehensive Needs Assessments (CNAs). The CNA is a description of current and future financial resources and needs of certain multifamily developments. Owners and non-profit entities submit the information.

DATES: *Comments Due Date:* January 30, 2004.

ADDRESSES: Interested persons are invited to submit comments regarding this proposal. Comments should refer to the proposal by name and OMB approval number (2502–0505) and should be sent to: Lauren Wittenberg,

OMB Desk Officer, Office of Management and Budget, Room 10235, New Executive Office Building, Washington, DC 20503; Fax number (202) 395–6974; E-mail *Lauren_Wittenberg@omb.eop.gov.*

FOR FURTHER INFORMATION CONTACT: Wayne Eddins, Reports Management Officer, AYO, Department of Housing and Urban Development, 451 Seventh Street, Southwest, Washington, DC 20410; e-mail *Wayne_Eddins@HUD.gov;* telephone (202) 708–2374. This is not a toll-free number. Copies of the proposed forms and other available documents submitted to OMB may be obtained from Mr. Eddins or on HUD's Web site at *http://www.hud.gov:63001/po/i/icbts/collectionsearch.cfm.*

SUPPLEMENTARY INFORMATION: The Department has submitted the proposal for the collection of information, as described below, to OMB for review, as required by the Paperwork Reduction Act (44 U.S.C. Chapter 35). The Notice lists the following information: (1) The title of the information collection proposal; (2) the office of the agency to collect the information; (3) the OMB approval number, if applicable; (4) the description of the need for the information and its proposed use; (5) the agency form number, if applicable; (6) what members of the public will be affected by the proposal; (7) how frequently information submissions will be required; (8) an estimate of the total number of hours needed to prepare the information submission including number of respondents, frequency of response, and hours of response; (9) whether the proposal is new, an extension, reinstatement, or revision of an information collection requirement; and (10) the name and telephone number of an agency official familiar with the proposal and of the OMB Desk Officer for the Department.

This Notice also lists the following information:

Title of Proposal: Comprehensive Needs Assessment (CNAs).

OMB Approval Number: 2502–0505.

Form Numbers: HUD 96001, HUD–96002, and HUD–96003.

Description of the Need for the Information and Its Proposed Use: The Comprehensive Needs Assessment is a description of current and future financial resources and needs of certain multifamily developments.

Respondents: Individuals or households, Business or other for-profit, Not-for-profit institutions, State, Local or Tribal Government.

Frequency of Submission: On occasion, Annually.

	Number of respondents	Annual responses	×	Hours per response	=	Burden hours
Reporting Burden	26,034	1		3.48		90,668

Total Estimated Burden Hours: 90,668.

Status: Extension of a currently approved collection.

Authority: Section 3507 of the Paperwork Reduction Act of 1995, 44 U.S.C. 35, as amended.

Dated: December 22, 2003.

Donna Eden,

Director, Office of Investment Strategies, Policy and Management, Office of the Chief Information Officer.

[FR Doc. 03–32025 Filed 12–30–03; 8:45 am]

BILLING CODE 4210–72–P

DEPARTMENT OF HOUSING AND URBAN DEVELOPMENT

[Docket No. FR–4815–N–110]

Notice of Submission of Proposed Information Collection to OMB: Ginnie Mae Multiclass Securities Program Documents

AGENCY: Office of the Chief Information Officer, HUD.

ACTION: Notice.

SUMMARY: The proposed information collection requirement described below has been submitted to the Office of Management and Budget (OMB) for review, as required by the Paperwork Reduction Act. The Department is soliciting public comments on the subject proposal.

HUD is requesting approval to continue to collect information for Ginnie Mae Multiclass Securities Program Documents. This collection of information is required in connection with the Multiclass Securities Program. The intent of the Multiclass Securities program is to increase liquidity in the secondary mortgage market and to attract new sources of capital for federally insured or guaranteed residential loans.

DATES: *Comments Due Date:* January 30, 2004.

ADDRESSES: Interested persons are invited to submit comments regarding this proposal. Comments should refer to the proposal by name and OMB approval number (2503–0030) and should be sent to: Lauren Wittenberg, OMB Desk Officer, Office of Management and Budget, Room 10235, New Executive Office Building, Washington, DC 20503; Fax number (202) 395–6974; E-mail *Lauren_Wittenberg@omb.eop.gov.*

FOR FURTHER INFORMATION CONTACT: Wayne Eddins, Reports Management Officer, AYO, Department of Housing and Urban Development, 451 Seventh Street, Southwest, Washington, DC 20410; e-mail *Wayne_Eddins@HUD.gov*; telephone (202) 708–2374. This is not a toll-free number. Copies of the proposed forms and other available documents submitted to OMB may be obtained from Mr. Eddins or on HUD's Web site at *http://www5.hud.gov:63001/po/i/icbts/collectionsearch.cfm.*

SUPPLEMENTARY INFORMATION: The Department has submitted the proposal for the collection of information, as described below, to OMB for review, as required by the Paperwork Reduction Act (44 U.S.C. chapter 35). The notice lists the following information: (1) The title of the information collection proposal; (2) the office of the agency to collect the information; (3) the OMB approval number, if applicable; (4) the description of the need for the information and its proposed use; (5) the agency form number, if applicable; (6) what members of the public will be affected by the proposal; (7) how frequently information submissions will be required; (8) an estimate of the total number of hours needed to prepare the information submission including number of respondents, frequency of response, and hours of response; (9) whether the proposal is new, an extension, reinstatement, or revision of an information collection requirement; and (10) the name and telephone number of an agency official familiar with the proposal and of the OMB Desk Officer for the Department.

This notice also lists the following information:

Title of Proposal: Ginnie Mae Multiclass Securities Program Documents.

OMB Approval Number: 2503–0030.

Form Numbers: None.

Description of the Need for the Information and Its Proposed Use: This collection of information is required in

connection with the Multiclass Securities Program. The intent of the Multiclass Securities program is to increase liquidity in the secondary mortgage market and to attract new sources of capital for federally insured or guaranteed residential loans.

Respondents: Business or other for-profit.

Frequency of Submission: On occasion.

REPORTING BURDEN

Number of respondents	Annual responses		Hours per response		Burden hours
16	4,800	×	4.05	=	19,456

Total Estimated Burden Hours: 19,456.

Status: Reinstatement, with change, of a previously approved collection.

Authority: Section 3507 of the Paperwork Reduction Act of 1995, 44 U.S.C. 35, as amended.

Dated: December 22, 2003.

Donna Eden,

Director, Office of Investment Strategies, Policy and Management, Office of the Chief Information Officer.

[FR Doc. 03–32026 Filed 12–30–03; 8:45 am]

BILLING CODE 4210–72–P

DEPARTMENT OF HOUSING AND URBAN DEVELOPMENT

[Docket No. FR–4814–N–10]

Notice of Proposed Information for Public Comments on Housing Opportunities for Persons With AIDS

AGENCY: Office of the Assistant Secretary for Community Planning and Development, HUD.

ACTION: Notice.

SUMMARY: The proposed information collection requirement described below will be submitted to the Office of Management and Budget (OMB) for review, as required by the Paperwork Reduction Act. The Department is soliciting public comments on the subject proposal.

DATES: *Comments Due Date:* March 1, 2004.

ADDRESSES: Interested persons are invited to submit comments regarding this proposal. Comments should refer to the proposal by name and/or OMB Control Number and should be sent to: Shelia E. Jones, Reports Liaison Officer, Department of Housing and Urban Development, 451 7th Street, SW., Room 7230, Washington, DC 20410.

FOR FURTHER INFORMATION CONTACT: Paula Smith (202) 708–1934 (this is not a toll-free number).

SUPPLEMENTARY INFORMATION: The Department is submitting the proposed information collection to OMB for review, as required by the Paperwork Reduction Act of 1995 (44 U.S.C. Chapter 35, as amended).

This Notice is soliciting comments from members of the public and affecting agencies concerning the proposed collection of information to: (1) Evaluate whether the proposed collection of information is necessary for the proper performance of the functions of the agency, including whether the information will have practical utility; (2) Evaluate the accuracy of the agency's estimate of the burden of the proposed collection of information; (3) Enhance the quality, utility, and clarity of the information to be collected; and (4) Minimize the burden of the collection of information on those who are to respond; including through the use of appropriate automated collection techniques or other forms of information technology, *e.g.,* permitting electronic submission of responses.

The HOPWA Program is authorized by the AIDS Housing Opportunity Act (42 U.S.C. 12901) as amended by the Housing and Community Development Act of 1992 (Pub. L. 102–550 approved October 28, 1992). The program is governed by the HOPWA Final Rule, 24 CFR part 574, as amended, and the Consolidated Submissions for Community Planning and Development Programs, Final Rule, 24 CFR part 91, as amended. This paper work submission revises and extends the current collection of information that is used by the Department in conducting an annual competition to award program funds and in reviewing grant performance submitted by grantees in the Annual Progress Report (APR), the Comprehensive Annual Performance and Evaluation Report (CAPER), and through the use of the Department's Information Technology Reporting systems (IDIS). The information collected is essential in order to implement statutory requirements and ensure that funds are used within the public trust for their intended purpose.

The Housing Opportunities for Persons with AIDS (HOPWA) Program provides housing assistance and related supportive services for low-income persons with HIV/AIDS and their families.

Funds may be used over a three year operating period. Grantees report to the Department on program accomplishments in annual progress reports and through information systems where the data is collected and maintained in an office database.

This Notice also lists the following information:

Title of Proposal: Housing Opportunities for Persons With AIDS (HOPWA) Program.

OMB Control Number, if applicable: 2506–0133.

Description of the need for the information and proposed use: The information to be collected is provided in applications for competitively awarded funds and in annual progress reports, and in formula programs through the use of annual CAPER reports and the active use of the Department's Information Technology Reporting Systems for grantees receiving these awards.

Agency form numbers, if applicable: HUD–40110–B and HUD–40110–C.

Members of affected public: States, units of general local government, and non-profit organizations.

Estimation of the total numbers of hours needed to prepare the information collection including number of respondents, frequency of response, and hours of response:

Activity	Number of respondents	Frequency of response	Hours of response
Application	202	1	70
Annual Progress Reports/IT Reports	95	1	130

The total annual estimated burden hours for these optional activities are 27,490 hours, including 1,000 hours that are estimated for miscellaneous activities such as grant negotiations, signing, amendments, environmental, and relocation activities.

Status of the proposed information collection: Revision of a currently approved collection. Public comments requested by HUD.

Authority: The Paperwork Reduction Act of 1995, 44 U.S.C. Chapter 35, as amended.

FOR FURTHER INFORMATION CONTACT: David Vos, Director, Office of HIV/AIDS Housing, Room 7212, U.S. Department of Housing and Urban Development, 451 Seventh Street, SW., Washington, DC 20410, and telephone number (202) 708–1934 (this is not a toll-free number) and TTY 1–800–877–8339 for copies of the proposed forms and other available documents.

Dated: December 19, 2003.

Roy Bernardi,

Assistant Secretary for Community Planning and Development.

[FR Doc. 03–32030 Filed 12–30–03; 8:45 am]

BILLING CODE 4210–29–M

DEPARTMENT OF THE INTERIOR

Office of the Secretary

Agency Information Collection Activities: Submission to OMB for Extension of Collection #1093–0004; Comment Request

AGENCY: Office of the Secretary (OS), Interior.

ACTION: Notice of submission to OMB of a request for extension of an information collection (1093–0004) and request for public comments.

SUMMARY: To comply with the Paperwork Reduction Act of 1995 (PRA), we are inviting comments on a collection of information that the Office of Management and Budget (OMB) approved on an emergency basis on June 24, 2003, and that we have submitted to OMB for review and approval as a continuing information collection. The information collection request (ICR) concerns the paperwork requirements to carry out the national awards program required by the Take Pride In America Program Act, 16 U.S.C. 4601–4608.

DATES: OMB has up to 60 days to approve or disapprove the information collection request, but may respond after 30 days. Therefore, public comments should be submitted to OMB by January 30, 2004, in order to be assured of consideration.

ADDRESSES: Please submit your comments via e-mail to the Desk Officer for the Department of the Interior, OMB Office of Information and Regulatory Affairs, at *OIRA_Docket@omb.eop.gov* or via fax at (202) 395–6566. Also, please hand-carry or mail a copy of your comments to the Department of the Interior, Office of the Secretary, Take Pride In America Program, MS–3459, 1849 C Street, NW, Washington, DC 20240, or e-mail a copy to *TakePride@ios.doi.gov.* Reference ''Information Collection 1093–0004'' in your e-mail subject line and mark your message for return receipt. Include your name and return address in your message.

FOR FURTHER INFORMATION CONTACT: To request a free copy of the information collection request or for further information about this collection, contact Marti Allbright, Executive Director, Take Pride In America Program, at 202–208–5848 or via e-mail at *TakePride@ios.doi.gov.*

SUPPLEMENTARY INFORMATION:

Title: Take Pride In America National Awards Application/Nomination Process.

OMB Control Number: 1093–0004.

Abstract: Under the Take Pride In America Program Act (Act), 16 U.S.C. Sec. 4601–4608, the Secretary of the Interior is to: (1) ''conduct a national awards program to honor those individuals and entities which, in the opinion of the Secretary * * * have distinguished themselves in activities'' under the purposes of the Act; and also to (2) ''establish and maintain a public awareness campaign in cooperation with public and private organizations and individuals—(A) to instill in the public the importance of the appropriate use of, and appreciation for Federal, State, and local lands, facilities, and natural and cultural resources; (B) to encourage an attitude of stewardship and responsibility toward these lands, facilities, and resources; and (C) to promote participation by individuals, organizations, and communities of a conservation ethic in caring for these lands, facilities, and resources.'' The Act states that ''[t]he Secretary is authorized * * * generally to do any and all lawful acts necessary or appropriate to further the purposes of the TPIA Program.''

The Take Pride In America (TPIA) Program was re-launched on April 16, 2003. The Program collects information provided voluntarily by individuals or organizations about their events and activities to further the purposes of the Act in order to select finalists and winners of the annual Take Pride In America National Awards. The TPIA National Awards recognize the valuable and significant contributions that individuals and organizations make in support of the stewardship of America's lands. Their tireless and creative efforts play a vital role in protecting, conserving, and enhancing America's wealth of natural, historical, and cultural resources. These awards recognize the efforts of individuals and organizations in both the public and private sectors for outstanding stewardship involving Federal, State, local, Tribal, and private lands.

We use the information collected primarily to select finalists and winners of the TPIA National Awards. Information also is used to assure the integrity of the Program (so that, for example, an individual or organization does not receive an award twice for the same project), for reporting on the accomplishments of the Program, for the public awareness campaign (such as press releases and website information on winning projects), and to further the purposes of the Act (such as fostering partnerships and coordination of projects).

OMB approved TPIA's application instructions and form on June 24, 2003, on an emergency basis, with an expiration date of December 31, 2003. To obtain a copy of the approved application instructions and form, please contact the TPIA office as shown in the **FOR FURTHER INFORMATION CONTACT** section of this notice.

No items of a sensitive nature are collected. Responses are voluntary.

A Federal agency may not conduct or sponsor, and a person is not required to respond to, a collection of information unless it displays a currently valid OMB control number. As required under 5 CFR 1320.8(d), we published a **Federal Register** notice soliciting comments on this collection of information on July 23, 2003 (68 FR 43540). We received no comments. This notice provides the

public with an additional 30 days to comment.

Frequency of collection: Primarily annually.

Estimated Annual Number and Description of Respondents: Approximately 500 voluntary responses from the public, with another 500 from Federal employees.

Estimated Reporting and Recordkeeping ''Hour'' Burden: The currently approved annual reporting burden for this collection is 250 hours—one hour per response for an estimated 250 public respondents. For this ICR, that burden will increase to 500 hours due to an increase in the estimated number of public respondents.

Estimated Reporting and Recordkeeping ''Non-Hour Cost'' Burden: We have identified no non-hour burdens for this collection.

Comments: We specifically request your comments as to: (a) Whether the proposed collection of information is necessary for the agency to perform its duties, including whether the information is useful; (b) the accuracy of the agency's estimate of the burden of the proposed collection of information; (c) the quality, usefulness, and clarity of the information to be collected; and (d) how to minimize the burden on the respondents, including the use of automated collection techniques or other forms of information technology.

Dated: December 23, 2003.

Marti Allbright,

Executive Director, Take Pride In America Program.

[FR Doc. 03–32144 Filed 12–30–03; 8:45 am]

BILLING CODE 4310–RK–P

DEPARTMENT OF THE INTERIOR

Fish and Wildlife Service

Receipt of Applications for Permit

AGENCY: Fish and Wildlife Service, Interior.

ACTION: Notice of receipt of applications for permit.

SUMMARY: The public is invited to comment on the following applications to conduct certain activities with endangered species and/or marine mammals.

DATES: Written data, comments or requests must be received by January 30, 2004.

ADDRESSES: Documents and other information submitted with these applications are available for review, subject to the requirements of the Privacy Act and Freedom of Information Act, by any party who submits a written request for a copy of such documents within 30 days of the date of publication of this notice to: U.S. Fish and Wildlife Service, Division of Management Authority, 4401 North Fairfax Drive, Room 700, Arlington, Virginia 22203; fax 703/358–2281.

FOR FURTHER INFORMATION CONTACT: Division of Management Authority, telephone 703/358–2104.

SUPPLEMENTARY INFORMATION:

Endangered Species

The public is invited to comment on the following application(s) for a permit to conduct certain activities with endangered species. This notice is provided pursuant to section 10(c) of the Endangered Species Act of 1973, *as amended* (16 U.S.C. 1531, *et seq.*). Written data, comments, or requests for copies of these complete applications should be submitted to the Director (address above).

Applicant: Dorothy J. Harber, Denison, TX, PRT–080867.

The applicant requests a permit to import the sport-hunted trophy of one male bontebok (*Damaliscus pygargus dorcas*) culled from a captive herd maintained under the management program of the Republic of South Africa, for the purpose of enhancement of the survival of the species.

Applicant: Charles W. Murray, Alamogordo, NM, PRT–080765.

The applicant requests a permit to import the sport-hunted trophy of one male bontebok (*Damaliscus pygargus dorcas*) culled from a captive herd maintained under the management program of the Republic of South Africa, for the purpose of enhancement of the survival of the species.

Applicant: Chris Gervasi, Chester Township, NJ, PRT–080872.

The applicant requests a permit to import the sport-hunted trophy of one male bontebok (*Damaliscus pygargus dorcas*) culled from a captive herd maintained under the management program of the Republic of South Africa, for the purpose of enhancement of the survival of the species.

Applicant: James Alan Schweitzer, Winter Haven, FL, PRT–080875.

The applicant request a permit to import the sport-hunted trophy of one male bontebok (*Damaliscus pygargus dorcas*) culled from a captive herd maintained under the management program of the Republic of South Africa, for the purpose of enhancement of the survival of the species.

Applicant: Kent Wendall Hall, Sr., Destrehan, LA, PRT–078284.

The applicant requests a permit to import the sport-hunted trophy of one male bontebok (*Damaliscus pygargus dorcas*) culled from a captive herd maintained under the management program of the Republic of South Africa, for the purpose of enhancement of the survival of the species.

Applicant: Albuquerque Biological Park, Albuquerque, NM, PRT–070083.

The applicant requests a permit to import one live male snow leopard (*Uncia uncia*) captive-born at the Assiniboine Park Zoo, Winnipeg, Canada, for the purpose of conservation education and enhancement of the survival of the species.

Applicant: George Carden Circus Intl, Inc., Springfield, MO, PRT–080831.

The applicant requests a permit to re-export and re-import one wild born female Asian elephant (*Elephas maximus*) called ''Jazz'' to worldwide locations for the purpose of enhancement of the species through conservation education. This notification covers activities to be conducted by the applicant over a three-year period and the import of any potential progeny born while overseas.

Endangered Marine Mammals and Marine Mammals

The public is invited to comment on the following application(s) for a permit to conduct certain activities with endangered marine mammals and/or marine mammals. The application(s) was/were submitted to satisfy requirements of the Endangered Species Act of 1973, *as amended* (16 U.S.C. 1531, *et seq.*) and/or the Marine Mammal Protection Act of 1972, *as amended* (16 U.S.C. 1361 *et seq.*), and the regulations governing endangered species (50 CFR part 17) and/or marine mammals (50 CFR part 18). Written data, comments, or requests for copies of the complete applications or requests for a public hearing on these applications should be submitted to the Director (address above). Anyone requesting a hearing should give specific reasons why a hearing would be appropriate. The holding of such a hearing is at the discretion of the Director.

Applicant: Dallas World Aquarium, Dallas, TX, PRT–068264.

The applicant requests a permit to maintain two Antillean manatees (*Trichechus manatus*) imported from Venezuela in December, 1999, under CITES import permit, 99US001425/9, for the purpose of enhancement of the survival of the species. This notification covers activities to be conducted by the applicant over a five-year period.

Concurrent with the publication of this notice in the **Federal Register**, the

Division of Management Authority is forwarding copies of the above applications to the Marine Mammal Commission and the Committee of Scientific Advisors for their review.

Applicant: James N. Maddox, Nashville, TN, PRT–080871.

The applicant requests a permit to import a polar bear (*Ursus maritimus*) sport hunted from the Davis Strait polar bear population in Canada prior to February 18, 1997, for personal use.

Applicant: Harold L. Ahlberg, Irving, TX, PRT–080868.

The applicant requests a permit to import a polar bear (*Ursus maritimus*) sport hunted from the Western Hudson Bay polar bear population in Canada for personal use.

Applicant: Brian D. Folkman, Lakeville, MN, PRT–080683.

The applicant requests a permit to import a polar bear (*Ursus maritimus*) sport hunted from the Baffin Bay polar bear population in Canada prior to February 18, 1997, for personal use.

Applicant: Joseph Hanley Sayers, Jr., Nashville, TN, PRT–080685.

The applicant requests a permit to import a polar bear (*Ursus maritimus*) sport hunted from the Baffin Bay polar bear population in Canada prior to February 18, 1997, for personal use.

Applicant: Trevor L. Ahlberg, Dallas, TX, PRT–080857.

The applicant requests a permit to import a polar bear (*Ursus maritimus*) sport hunted from the Western Hudson Bay polar bear population in Canada for personal use.

Applicant: John R. Beckstrand, Warwick, ND, PRT–080829.

The applicant requests a permit to import a polar bear (*Ursus maritimus*) sport hunted from the Lancaster Sound polar bear population in Canada for personal use.

Applicant: Robert D. Pettus, Charlotte, NC, PRT–080874.

The application requests a permit to import a polar bear (*Ursus maritimus*) sport hunted from the Davis Strait polar bear population in Canada prior to February 18, 1997, for personal use.

Applicant: James W. Ribman, Dallas, TX, PRT–080901.

The applicant requests a permit to import a polar bear (*Ursus maritimus*) sport hunted from the Western Hudson Bay polar bear population in Canada for personal use.

Dated: December 12, 2003.

Charles S. Hamilton,

Senior Permit Biologist, Branch of Permits, Division of Management Authority.

[FR Doc. 03–32040 Filed 12–30–03; 8:45 am]

BILLING CODE 4310–55–P

DEPARTMENT OF THE INTERIOR

Geological Survey

Scientific Earthquake Studies Advisory Committee

AGENCY: Geological Survey.

ACTION: Notice of meeting.

SUMMARY: Pursuant to Pub. L. 106–503, the Scientific Earthquake Studies Advisory Committee (SESAC) will hold its sixth meeting. The meeting location is the U.S. Geological Survey, John Wesley Powell National Center, Rm. 1B215, 12201 Sunrise Valley Drive, Reston, Virginia 20192. The Committee is comprised of members from academia, industry, and State government. The Committee shall advise the Director of the U.S. Geological Survey (USGS) on matters relating to the USGS's participation in the National Earthquake Hazards Reduction Program.

The Committee will review the overall direction of the U.S. Geological Survey's Earthquake Hazards Program in the current and next fiscal years, with emphasis on defining future opportunities and strategies for balancing program needs against resource limitations. The Committee will also consider and recommend strategies for increasing visibility, impact, and external support for the Earthquake Hazards Program.

Meetings of the Scientific Earthquake Studies Advisory Committee are open to the public.

DATES: January 21, 2004, commencing at 9 a.m. and adjourning at 4:30 p.m. on January 22, 2004.

FOR FURTHER INFORMATION CONTACT: Dr. William Leith, U.S. Geological Survey, MS 905, 12201 Sunrise Valley Drive, Reston, Virginia 20192, (703) 648–6785.

Dated: December 18, 2003.

P. Patrick Leahy,

Associate Director for Geology.

[FR Doc. 03–32192 Filed 12–30–03; 8:45 am]

BILLING CODE 4310–Y7–M

DEPARTMENT OF THE INTERIOR

Bureau of Indian Affairs

Cheyenne and Arapaho Tribes of Oklahoma Alcohol Beverage Control Ordinance

AGENCY: Bureau of Indian Affairs, Interior.

ACTION: Notice.

SUMMARY: This notice publishes the Cheyenne and Arapaho Tribes of Oklahoma Alcohol Beverage Control Ordinance. The ordinance regulates and controls distribution, sale, consumption, possession, inspection, licensing, enforcement and legal compliance associated with the introduction of alcohol on the Cheyenne and Arapaho Tribes of Oklahoma Tribal Land.

EFFECTIVE DATE: This Code is effective on December 31, 2003.

FOR FURTHER INFORMATION CONTACT: Ralph Gonzales, Office of Tribal Services, 1951 Constitution Avenue NW, MS–320–SIB, Washington, DC 20240, Telephone (202) 513–7629.

SUPPLEMENTARY INFORMATION: Pursuant to the Act of August 15, 1953, Public Law 83–277, 67 Stat. 586, 18 U.S.C. 1161, as interpreted by the Supreme Court in *Rice* v. *Rehner*, 463 U.S. 713 (1983), the Secretary of the Interior shall certify and publish in the **Federal Register** notice of adopted liquor ordinances for the purpose of regulating liquor transactions in Indian country. The Cheyenne and Arapaho Tribes of Oklahoma adopted Tribal Ordinance No. 051702S080 on May 17, 2002. The purpose of this ordinance is to govern the distribution, sale, consumption, possession, inspection, licensing, enforcement and legal compliance associated with the introduction of alcohol on the Cheyenne and Arapaho Tribes of Oklahoma Tribal Land.

This notice is published in accordance with the authority delegated by the Secretary of the Interior to the Principal Deputy Assistant Secretary—Indian Affairs.

I certify that Liquor Ordinance No. 051702S080 was duly adopted by the Tribal Council of the Cheyenne and Arapaho Tribes of Oklahoma on May 17, 2002.

Dated: December 19, 2003.

Aurene M. Martin,

Principal Deputy Assistant Secretary—Indian Affairs.

The Cheyenne and Arapaho Tribes of Oklahoma

Alcohol Beverage Control Ordinance

Chapter I—Introduction

101—Title. This Ordinance shall be known as the ''Cheyenne and Arapaho Tribes of Oklahoma Alcohol Beverage Control Ordinance.''

102—Authority. This Ordinance is enacted pursuant to the Act of August 15, 1953. Pub. L. 83–277, 67 Stat. 586, 18 U.S.C. § 1161 and article IV, § 2, of the Constitution and By-Laws of the Cheyenne-Arapaho Tribes of Oklahoma.

103—Purpose. The purpose of this Ordinance is to regulate and control the manufacture, distribution, possession,

and sale of Alcohol Beverages on Tribal lands of the Cheyenne and Arapaho Tribes of Oklahoma. The enactment of this Ordinance will enhance the ability of the Tribal government to control all such alcohol-related activities within the jurisdiction of the Tribes and will provide an important source of revenue for the continued operation and strengthening of the Tribal government and the delivery of Tribal government services.

104—Application of 18 U.S.C. § 1161. ''Federal law forbids the introduction, possession and sale of liquor in Indian Country (18 U.S.C. § 1154 and other statutes), except when same is in conformity both with the laws of the State and the Tribe (18 U.S.C. § 1161). As such, compliance with this ordinance shall be in addition to, and not a substitute for, compliance with the laws of the State of Oklahoma.

105—Administration of Ordinance. The Business Committee, under its powers vested under the Constitution and Bylaws and this Ordinance, delegates to the Cheyenne and Arapaho Tax Commission the authority to exercise all of the powers and accomplish all of the purposes as set forth in this Ordinance, which may include the following actions:

A. Adopt and enforce rules and regulations for the purpose of effectuating this Ordinance, which includes the setting of fees;

B. Execute all necessary documents; and

C. Perform all matters and things incidental to and necessary to conduct its business and carry out its duties and functions under this Ordinance.

106—Sovereign Immunity Preserved.

A. The Tribes, are immune from suit in any jurisdiction except to the extent that such immunity has been expressly and unequivocally waived in writing by the Tribes.

B. Nothing in this Ordinance shall be construed as waiving the sovereign immunity of the Tribes or any of its constituent parts as described above, except that after exhaustion of the administrative remedies provided herein, a person appealing a final decision made pursuant to this Ordinance by the Tax Commission may appeal to the Tribal Court as specified in this Ordinance and such rules and regulations as may be prescribed by the Tax Commission.

107—Applicability. This Ordinance shall apply to all Tribal enterprises located within Tribal lands, consistent with applicable federal Indian liquor laws.

108—Computation of Time. Unless otherwise provided in this Ordinance, in computing any period of time prescribed or allowed by this Code, the day of the act, event, or default from which the designated period time begins to run shall not be included. The last day of the period so computed shall be included, unless it is a Saturday, a Sunday, or a legal holiday. For the purposes of this Ordinance, the term ''legal holiday'' shall mean all legal holidays under Tribal or Federal law. All papers mailed shall be deemed served at the time of mailing.

109—Liberal Construction. Provisions of this Ordinance shall be liberally construed to achieve the purposes set forth, whether clearly stated or apparent from the context of the language used herein.

110—Applicable Taxes. The Tax Commission shall enforce all applicable and lawful taxes imposed on the sale of Alcohol Beverages. The failure of any licensee to pay applicable taxes on the sale of alcohol may subject the licensee to, among other things, the revocation of said license.

Chapter II—Declaration of Public Policy

201—Matter of Special Interest. The manufacture, distribution, possession, sale, and consumption of Alcohol Beverages within the jurisdiction of the Cheyenne and Arapaho Tribes of Oklahoma is a matter of significant concern and special interest to the Tribes.

The Business Committee hereby declares that the policy of the Tribes is to eliminate the problems associated with unlicensed, unregulated, and unlawful importation, distribution, manufacture, and sale of Alcohol Beverages for commercial purposes and to promote temperance in the use and consumption of Alcohol Beverages by increasing Tribal control over such activities on Tribal land.

202—Federal Law. The introduction of Alcohol Beverages within the jurisdiction of the Tribes is currently prohibited by federal law (18 U.S.C. § 1154) except as provided for therein, and the Tribes are expressly delegated the right to determine when and under what conditions Alcohol Beverages shall be permitted thereon (18 U.S.C. § 1161).

203—Need for Regulation. The Tribes find that the Federal prohibition upon manufacture, distribution, possession, sale, and consumption of Alcohol Beverages has proven ineffective and that the problems associated with same should be addressed by the laws of the Tribes, with all such business activities related thereto subject to the taxing and regulatory authority of the Cheyenne and Arapaho Tribes Tax Commission.

204—Locations. The Tribes find that the manufacture, distribution, possession, sale, and consumption of Alcohol Beverages shall be licensed under this Ordinance only where such activity will be conducted within or upon Tribal land.

Chapter III—Definitions

As used in this Ordinance, the following words shall have the following meanings unless the context clearly requires otherwise:

Alcohol. ''Alcohol'' means the product of distillation of fermented liquid, whether or not rectified or diluted with water, but does not mean ethyl or industrial alcohol, diluted or not, that has been denatured or otherwise rendered unfit for beverage purposes.

301—Alcohol Beverage. ''Alcohol Beverage'' when used in this Ordinance means, and shall include liquor, beer, or spirits of wine, by whatever name they may be called, and from whatever source and by whatever process they may be produced, and which contain a sufficient percent of alcohol by volume which, by law, makes said beverage subject to regulation as an intoxicating beverage under the laws of the state where the beverage is sold.

302—Applicant. ''Applicant'' means any ''person'' who submits an application to the Tax Commission for an Alcohol Beverage license and who has not yet received such a license.

303—Business Committee. ''Business Committee'' means the duly elected Business Committee of the Cheyenne and Arapaho Tribes of Oklahoma.

304—Constitution. ''Constitution'' means the Constitution and By-Laws of the Cheyenne and Arapaho Tribes of Oklahoma.

305—License. ''License'' means an Alcohol Beverage license issued by the Cheyenne and Arapaho Tax Commission authorizing the importation, manufacture, distribution, or sale of Alcohol Beverages for commercial purposes under the provisions of this Ordinance.

306—Licensee. ''Licensee'' means a Tribal enterprise that holds an Alcohol Beverage license issued by the Tax Commission and includes any employee or agent of the Licensee.

307—Liquor store. ''Liquor store'' means any store or establishment at which liquor is sold and shall include any and all businesses engaged in the sale of Alcohol Beverages, whether sold as packaged or by the drink.

308—Manufacturer. ''Manufacturer'' means any person engaged in the manufacture of Alcohol Beverage.

309—Ordinance. ''Ordinance'' means the Cheyenne and Arapaho Tribes of Oklahoma Alcohol Beverage Control Ordinance, as hereafter amended.

310—Package. ''Package'' means the sale of an Alcohol Beverage by delivery of same by a seller to a purchaser in any container, bag, or receptacle for consumption beyond the premises or the location designated on the license.

311—Public Place. ''Public place'' means and shall include Tribal, county, State, or Federal highways, roads, and rights-of-way; buildings and grounds used for school purposes; public dance halls and grounds adjacent thereto; public restaurants, buildings, meeting halls, hotels, theaters, retail stores, and business establishments generally open to the public and to which the public is allowed to have unrestricted access; and all other places to which the general public has unrestricted right of access and that are generally used by the public. For the purpose of this Ordinance, ''public place'' shall also include any privately owned business property or establishment that is designed for or may be regularly used by more than the owner of same but shall not include the private, family residence of any person.

312—Sale. ''Sale'' and ''Sell'' means the exchange, barter, traffic, furnishing, or giving away for commercial purpose an Alcohol Beverage by any and all means, by whatever name commonly used to describe the same, by any person to another.

313—Tax Commission. ''Tax Commission'' means the Cheyenne and Arapaho Tax Commission created pursuant to the Cheyenne and Arapaho Tribes of Oklahoma General Revenue and Taxation Act of 1988.

314—Tribal land(s). ''Tribal land(s)'' shall mean and reference the geographic area that includes all land included within the definition of ''Indian country'' as established and described by federal law and that is located within the former reservation boundary of the Cheyenne and Arapaho Tribes of Oklahoma, including all tribally owned trust lands located within same as are now in existence or may hereafter be added to.

315—Tribal Law. ''Tribal law'' means the Tribal Constitution and all laws, Ordinances, codes, resolutions, and regulations now and hereafter duly enacted by the Tribes.

316—Tribes. ''Tribes'' shall mean the Cheyenne and Arapaho Tribes of Oklahoma.

Chapter IV—Sales of Alcohol Beverage

401—Prohibition of the Unlicensed Sale of Alcohol Beverages. This Ordinance prohibits the importation, manufacture, distribution, or sale of Alcohol Beverages for commercial purposes, other than where conducted by a Tribal enterprise in accordance with this Ordinance. No license shall be issued to any person or entity other than a Tribal enterprise. The Federal liquor laws are intended to remain applicable to any act or transaction that is not authorized by this Ordinance, and violators shall be subject to Federal law.

402—License Required. Any and all sales of Alcohol Beverages conducted upon Tribal land shall be permitted only where the seller holds a current Alcohol Beverage license duly issued by the Cheyenne and Arapaho Tax Commission. A licensee has the right to engage only in those Alcohol Beverage transactions expressly authorized by such license in accordance with this Ordinance.

403—Sales for Cash. All sales of Alcohol Beverages conducted shall be conducted on a cash-only basis, and no credit for said purchase and consumption of same shall be extended to any person, organization, or entity except that this provision does not prohibit the payment of same by use of credit cards acceptable to the seller (including but not limited to VISA, MasterCard, or American Express).

404—Personal Consumption. All sales shall be for the personal use and consumption of the purchaser or his/her guest(s). The resale of any Alcohol Beverage purchased within or upon Tribal lands by an unlicensed seller is prohibited.

405—Consumption of Liquor. No Tribal operator shall permit any person to open or consume liquor on his or her premises or any premises adjacent thereto and in his or her control. The Commission will allow the consumption of liquor and shall identify where liquor may be consumed on Tribal Trust lands.

Chapter V—Licensing

501—Eligibility. Only applicants operating upon Tribal lands and owned and operated by the Cheyenne and Arapaho Tribes of Oklahoma shall be eligible to receive a license for the sale of any Alcohol Beverage.

502—Application Process. The Tax Commission may cause a license to be issued to any applicant as is deemed appropriate and not contrary to the best interests of the Tribes and its Tribal members. Any applicant that desires to be licensed to sell Alcohol Beverages and that meets the eligibility requirements of § 501 must apply to the Tax Commission of the Cheyenne and Arapaho Tribes for a license to sell or to serve Alcohol Beverages. Any such person as may be empowered to make such application shall fully and accurately complete an application provided by the Tax Commission, and shall pay such application fee as may be required by the Tax Commission.

503—Classes of Licenses. The Tax Commission shall have the authority to issue the following classes of Alcohol Beverage licenses:

A. ''Retail on-sale general license'' means a license authorizing the licensee to sell Alcohol Beverages at retail to be consumed by the buyer only on the premises or at the location designated in the license. This class includes, but is not limited to, hotels where alcohol beverages may be sold for consumption on the premises and in the rooms of bona fide registered guests.

B. ''Retail on-sale beer and wine license'' means a license authorizing the licensee to sell beer and wine at retail to be consumed by the buyer only on the premises or at the location designated in the license. This class includes, but is not limited to, hotels where beer and/or wine may be sold for consumption on the premises and in the rooms of bona fide registered guests.

C. ''Retail off-sale general license'' means a license authorizing the licensee to sell Alcohol Beverages at retail to be consumed by the buyer off of the premises or at a location other than the one designated in the license.

D. ''Retail off-sale beer and wine license'' means a license authorizing the licensee to sell beer and wine at retail to be consumed by the buyer off of the premises or at a location other than the one designated in the license.

E. ''Manufacturers license'' means a license authorizing the applicant to manufacture Alcohol Beverages for the purpose of sale within Tribal land.

F. ''Temporary license'' means a license authorizing the sale of Alcohol Beverages on a temporary basis for premises temporarily occupied by the licensee for a picnic, social gathering, or similar occasion. Temporary licenses may not be renewed upon expiration. A new application must be submitted for each such license.

504—Application Form and Content. An application for a license shall be made to the Tax Commission and shall contain at least the following information:

A. The name and address of the applicant, including the names and addresses of all of the principal officers and directors, and other employees with primary management responsibility related to the sale of Alcohol Beverages;

B. The specific area, location, and/or premise(s) for which the license is applied for;

C. The hours that the applicant will sell the Alcohol Beverages;

D. For Temporary Licenses, the dates for which the license is sought to be in effect;

E. The class of Alcohol Beverage license applied for as set forth in § 503;

F. Whether the applicant has a state liquor license;

G. A sworn statement by the applicant to the effect that none of the applicant's officers and directors, and employees with primary management responsibility related to the sale of Alcohol Beverage, were ever convicted of a felony under any law, and have not violated and will not violate or cause or permit to be violated any of the provisions of this Ordinance; and

H. The application shall be verified under oath and notarized by a duly authorized representative.

505—Public Hearing. Upon receipt of an application for issuance or renewal of a license, and the payment of any fees required by the Tax Commission, the Tax Commission shall set the matter for a public hearing. Notice of the time and place of the hearing shall be given to the applicant and the public at least twenty (20) calendar days before the hearing. Notice shall be given to the applicant by prepaid U.S. mail at the address listed in the application. Notice shall be given to the public by publication in a newspaper of general circulation sold on the Tribal lands. The notice published in the newspaper shall include the name of the applicant, whether the action involves a new issuance or renewal, the class of license applied for, and a general description of the area where the alcohol will be or has been sold. At the hearing, the Tax Commission shall hear from any person who wishes to speak for or against the application. The Tax Commission shall have the authority to place time limits on each speaker and limit or prohibit repetitive testimony.

506—Action on the Application. The Tax Commission shall act on the matter within thirty (30) days of the conclusion of the public hearing. The Tax Commission shall have the authority to deny, approve, or approve with conditions the application, consistent with the laws of the Tribes, including Article III, Section 2 of the Constitution and Bylaws. Upon approval of an application, the Tax Commission shall issue a license to the applicant in a form to be approved from time to time by the Tax Commission.

507—Denial of License or Renewal. An application for a new license or license renewal may be denied for one or more of the following reasons.

A. The applicant has materially misrepresented facts contained in the application;

B. The applicant is presently not in compliance with this ordinance or other Tribal or Federal laws;

C. Granting of the license (or renewal thereof) would create a threat to the peace, safety, morals, health, or welfare of the Tribes;

D. The applicant has failed to complete the application properly or has failed to tender the appropriate fee.

E. A verdict or judgment of guilty has been entered against or a plea of nolo contendere has been entered by an applicants' officer or director, or an employee with primary management responsibility related to the sale of Alcohol Beverages, to any offense under Federal or State law prohibiting or regulating the sale, use, possession or giving away of Alcohol Beverages.

508—Temporary Denial. If the application is denied solely on the basis of subsection 507(D) the Tax Commission shall, within fourteen (14) days of receipt of the application, issue a written notice of temporary denial to the applicant. Such notice shall set forth the reasons for denial and shall state that the denial will become permanent if the problem(s) is not corrected within fifteen (15) days following receipt of the notice.

509—Cure. If an applicant is denied a license, the applicant may cure the deficiency and resubmit the application for consideration. Each re-submission will be treated as a new application for license or renewal of a license.

510—Investigation. Upon receipt of an application for the issuance, transfer, or renewal of a license, the Tax Commission shall make a thorough investigation to determine whether the applicant and the premises for which a license is applied for qualify for a license and whether the provisions of this Ordinance have been complied with, and shall investigate all matters connected therewith which may affect the public health, welfare, and morals.

511—Term and Renewal of License. Each license shall be issued for a period not to exceed two (2) years from the original date of issuance and may be renewed thereafter on a year-to-year basis, in compliance with this Ordinance and any rules and/or regulations hereafter adopted by the Tribes. The applicant shall renew a license by, not less than 90 days prior to the license's expiration date, submitting a written renewal application to the Tax Commission on the provided form.

512—Procedures for Appealing a Denial or Condition of Application. Any applicant for a license or licensee who believes the denial of their license, request for renewal, or condition imposed on their license was wrongfully determined may appeal the decision of the Tax Commission in accordance with the Tax Commission Rules and Regulations. For purposes of appeal, an applicant or licensee shall stand in the place of a ''taxpayer'' as that term is used in the Tax Commission Rules and Regulations appeal procedure. For purposes of appeal, the action being complained of shall stand in the place of the term ''the tax,'' where appropriate, as that term is used in the Tax Commission Rules and Regulations appeal procedure.

513—Revocation of License. The Tax Commission may initiate action to revoke a licence whenever it is brought to the attention of the Commission that a licensee:

A. has materially misrepresented facts contained in any license application;

B. is not in compliance with Tribal or federal laws material to the issue of licensing;

C. failed to comply with any condition of a license, including failure to pay taxes on the sale of Alcohol Beverages or failure to pay a required fee;

D. has had a verdict, or judgment of guilty entered against, or has had a plea of nolo contendere entered by one of its officers or directors, or managers with primary responsibility over the sale of Alcohol Beverages, as to any offense under Federal or State law prohibiting or regulating the sale, use, or possession, of Alcohol Beverages;

E. failed to take reasonable steps to correct objectionable conditions constituting a nuisance on the licensed premises or any adjacent area within a reasonable time after receipt of a notice to make such corrections has been received from the Tax Commission; or

F. has had their Oklahoma liquor license suspended or revoked.

514—Initiation of Revocation Proceedings. Revocation proceedings are initiated either: (1) By the Tax Commission, on its own motion and through the adoption of an appropriate resolution meeting the requirements of this section; or (2) by any person who files an accusation with the Tax Commission. The accusation shall be in writing and signed by the maker. Both the accusation and resolution shall state facts showing that there are specific grounds under this Ordinance which would authorize the Tax Commission to revoke the license(s). The Tax Commission shall cause the matter to be

set for a hearing before the Tax Commission on a date no later than 30 days from the Commission's receipt of an accusation or adoption of the resolution. Notice of the time, date, and place of the hearing shall be given to the licensee and the public in the same manner as set forth in section 505. The notice shall state that the licensee has the right to file a written response to the accusation or resolution, verified under oath and signed by the licensee, no later than ten (10) days prior to the hearing date.

515—Hearing. Any hearing held on any accusation shall be held under such rules and regulations as the Tax Commission may prescribe. Both the licensee and the person filing the accusation shall have the right to present witnesses to testify and to present written documents in support of their positions to the Tax Commission. The Commission shall render its decision within sixty (60) days after the date of the hearing. The decision of the Commission shall be final. Except that any person so aggrieved may file action in the Tribal Court provided that all administrative remedies have been exhausted.

516—Delivery of License. Upon revocation of a license, the enterprise shall forthwith deliver up the license to the Tax Commission.

517—Transferability of Licenses. Alcohol Beverage licenses shall be issued to a specific licensee for use at a single business location (business enterprise) and shall not be transferable for use by any business or location. Separate licenses shall be issued for each of the premises of any business establishment having more than one address.

518—Posting of License. Every licensee shall post and keep posted its license(s) in a conspicuous place(s) on the licensed premises.

Chapter VI—Powers of Enforcement

601—Tax Commission Authority. In furtherance of this Ordinance, the Tax Commission shall have exclusive authority to administer and implement this Ordinance and shall have the following powers and duties hereunder:

(a) To publish and enforce rules and regulations governing the sale, manufacture, distribution, and possession of Alcohol Beverages within the Tribal lands of the Cheyenne and Arapaho Tribes of Oklahoma;

(b) To employ such persons as may be reasonably necessary to perform all administrative and regulatory responsibilities of the Tax Commission hereunder. All such employees shall be Tribal employees;

(c) To issue licenses permitting the sale, manufacture, distribution, and possession of Alcohol Beverages within the Tribal lands;

(d) To give reasonable notice and to hold hearings on violations of this Ordinance, and for consideration of the issuance or revocation of licenses hereunder;

(e) To bring such other actions as may be required to enforce this Ordinance;

(f) To prepare and deliver such reports as may be required by law or regulation; and

(g) To collect taxes, fees, and penalties as may be required, imposed, or allowed by law or regulation, and to keep accurate books, records, and accounts of same.

602—Right of Inspection. Any business premises licensed to manufacture, distribute, or sell alcohol pursuant to this Ordinance shall be open for inspection by the Tax Commission for the purpose of insuring the compliance or noncompliance of the licensee with all provisions of this Ordinance and any applicable Tribal law or regulation.

603—Limitation on Powers. In the exercise of its powers and duties under this Ordinance, members of the Tax Commission shall not, whether individually or as a whole,

(a) Accept any gratuity, compensation or other thing of value from any Alcohol Beverage wholesale, retailer, or distributor, or from any applicant or licensee of the Tribes;

(b) Waive the sovereign immunity of the Cheyenne and Arapaho Tribes of Oklahoma, or of any agency, commission, or entity thereof without the express written consent of the Business Committee.

Chapter VII—Taxes

701—Excise Tax. There is hereby levied and shall be collected a tax on each retail and wholesale sale of Alcohol Beverages on Tribal land in the amount of one percent (1%) of the retail sales price. All taxes from the sale of such Alcohol Beverages shall be paid into a separate account under exclusive authority of the Tax Commission. This tax may be adjusted as requested by the Tax Commission and approved by the Business Committee.

702—Taxes Due. All taxes for the sale of Alcohol Beverages under this Ordinance are due on the 15th day of the month following the end of the calendar quarter for which taxes are due.

703—Delinquent Taxes. Past due taxes shall accrue interest at the rate of two percent (2%) per month until paid.

704—Reports. Along with the payment of taxes imposed hereby, the licensee shall submit a quarterly report and accounting of all income from the sale or distribution of Alcohol Beverages, and for the taxes collected.

705—Audit. All licensees are subject to the review or audit of its books and records relating to the sale of Alcohol Beverages hereunder by the Tax Commission. Such review or audit may be performed periodically by Tax Commission's agents or employees at such times as in the opinion of the Tax Commission such review or audit is appropriate to the proper enforcement of this Ordinance.

Chapter VIII—Rules, Regulations, and Enforcement

801—Sale or Distribution Without License. Any person who sells or offers for sale or distribution any Alcohol Beverage in violation of this Ordinance, or who operates a business on Tribal land and has Alcohol Beverage(s) for sale in his possession without a license shall be in violation of this Ordinance.

802—Unlawful Purchase. Any person who purchases any Alcohol Beverage on Tribal lands from a person or business who is not licensed by the tribes to sell Alcohol Beverages shall be in violation of this Ordinance.

803—Intent to Sell. Any person who keeps or possesses, or causes another to keep or possess, upon his person or any premises within his control, an Alcohol Beverage, with the intent to sell or to distribute same contrary to the provisions of this Ordinance, shall be in violation of this Ordinance.

804—Sale to Intoxicated Person. Any person who knowingly sells an Alcohol Beverage to a person who is intoxicated shall be in violation of this Ordinance.

805—Public Conveyance. Any person engaged in the business of carrying passengers for hire, and every agent, servant, or employee of such person who shall knowingly permit any person to drink an Alcohol Beverage in any such public conveyance shall be in violation of this Ordinance.

806—Age of Consumption. No person under the age to twenty-one (21) years shall possess or consume any Alcohol Beverage on Tribal lands.

807—Serving Underage Person. No person shall serve an Alcohol Beverage to a person under the age of 21 or permit any such person to consume alcohol on the premises or on any premises under his control. Any licensee violating this section shall be guilty of a separate violation of this Ordinance for each and every drink served and/or consumed.

808—False Identification. Any person who purchases or who attempts to

purchase an Alcohol Beverage through the use of false, or altered identification that falsely purports to show the person to be over the age of 21 years shall be in violation of this Ordinance.

809—Documentation of Age. When requested by a seller of Alcohol Beverages, any person shall be required to present proper and satisfactory documentation of the bearer's age, signature, and photograph. For purposes of this Ordinance, proper and satisfactory documentation shall include one or more of the following:

(a) Drivers license or personal identification card issued by any state department of motor vehicles or tribal or federal government agency;

(b) United States active duty military credentials;

(c) Passport.

810—General Penalties. Any person adjudged to be in violation of this Ordinance, including any lawful regulation promulgated pursuant thereto, shall be subject to a civil penalty f not more than Five Hundred Dollars ($500.00) for each such violation. The Tax Commission may adopt by resolution a separate schedule for fines for each type of violation, taking into account the seriousness and threat the violation may pose to the general health and welfare. Such schedule may also provide, in the case of repeated violations, for imposition of monetary penalties greater than the Five Hundred Dollars ($500.00) limitation set forth above. The penalties provided for herein shall be in addition to any criminal penalties which may hereafter be imposed under a separate Ordinance adopted by the Tribes.

811—Initiation of Action. Any violation of this Ordinance shall constitute a public nuisance. The Tax Commission may initiate and maintain an action in Tribal court or any court of competent jurisdiction to abate and permanently enjoin any nuisance declared under this Ordinance. Any action taken under this section shall be in addition to any other penalties provided for in this Ordinance. The plaintiff shall not be required to give bond in this action.

812—Contraband; Seizure; Forfeiture.

A. All Alcohol Beverages within the Reservation held, owned, or possessed by any person or licensee operating in violation of this Ordinance is hereby declared to be contraband and subject to seizure and forfeiture to the Tribes.

B. Seizure of contraband as defined in this Ordinance shall be done by law enforcement and all such contraband seized shall be inventoried and maintained by law enforcement pending final order of the Tax Commission and any appeals there from as may be filed with the Tribal Court or Supreme Court. The owner of the contraband seized may alternatively request that the contraband seized be sold and the proceeds received therefrom be maintained by law enforcement pending final order of the Tax Commission and any appeals there from. The proceeds are subject to forfeiture in lieu of the seized contraband.

C. Within ten days following the seizure of the contraband, a hearing shall be held by the Tax Commission, at which time the operator or owner of the contraband shall be given an opportunity to present evidence in defense of his or her activities.

D. Notice of the hearing of at least 10 days shall be given to the person from whom the property was seized, if known. If the person is unknown, notice of the hearing shall be posted at the place where the contraband was seized and at other public places on the Reservation. The notice shall describe the property seized, and the time, place, and cause of seizure and give the name and place of residence, if known, of the person from whom the property was seized.

If upon the hearing, the evidence warrants, or, if no person appears as a claimant, the Tax Commission shall thereupon enter a judgment of forfeiture, and all such property shall be the property of the Cheyenne and Arapaho Tribes of Oklahoma.

If upon the hearing the evidence does not warrant forfeiture, the seized contraband shall be immediately returned to the owner.

Chapter IX—Nuisance and Abatement

901—Nuisance. Any room, house, building, vehicle, structure or other place where Alcohol Beverages are sold, manufactured, bartered, exchanged, given away, furnished, or otherwise possessed or disposed of in violation of this Ordinance, or of any other Tribal law related to the transportation, possession, distribution or sale of Alcohol Beverages, and including all property kept therein, or thereon, and use in, or in connection with the violation is hereby declared to be a nuisance upon any second or subsequent violation of same.

902—Action to Abate Nuisance. Upon a finding that any such place or activity is a nuisance under the provision of this Ordinance, the Tribes or the Tax Commission may bring a civil action in the Tribal Court to abate and to perpetually enjoin any such activity declared to be a nuisance. Such injunctive relief may include a closure of any business or other use of the property for up to one (1) year from the date of the order, or until the owner, lessee or tenant shall give bond of no less than Twenty-Five Thousand dollars ($25,000) payable to the Tribes and conditioned that no further violation of this Ordinance or other Tribal Alcohol Beverage law and by payment of all fines, costs and assessments against him/her. If any condition of the bond is violated, the bond may be recovered and proceeds delivered to the Tax Commission for the use of the Tribes. Any action taken under this section shall be in addition to any other penalties provided for in this Ordinance. Either party may appeal the ruling of the Tribal Court to the Supreme Court or may file a motion to reconsider initial ruling or enter other appropriate motions.

Chapter X—Revenue and Reporting

1001—Use and Appropriation of Revenue Received. All revenue received by the Tax Commission under this Ordinance, from whatever sources, shall be expended first for the administrative costs incurred in the administration and enforcement of this Ordinance. Any excess funds shall be subject to and available to appropriation by the Tribes for essential governmental, and social services, related to drug and alcohol education, counseling and treatment.

1002—Audit. Tax Commission handling of revenue received under this ordinance is subject to review and audit as a part of the annual financial audit of the Tax Commission.

1003—Reports. The Tax Commission shall submit to the Business Committee a quarterly report and an accounting of all revenue received and expended pursuant to this Ordinance.

Chapter XI—Severability and Effective Date

1101—If any provision or application of this Ordinance is deemed by a court of competent jurisdiction to be invalid and unenforceable, such determination shall not be held to render ineffectual any of the remaining provisions or applications of this Ordinance not specifically identified thereby, or to render such provision to be inapplicable to other persons or circumstances. This Ordinance shall be effective upon certification by the Secretary of the Interior and its publication in the **Federal Register** and filing for record in the office of the Clerk of the Tribal Court.

1102—Any and all prior enactments of the Cheyenne and Arapaho Tribes of Oklahoma that are inconsistent with the provisions of this Ordinance are hereby rescinded.

Chapter XII—Amendment

1201—This Ordinance may be amended only in accordance with the provisions of the Constitution of the Cheyenne and Arapaho Tribes of Oklahoma.

[FR Doc. 03–32043 Filed 12–30–03; 8:45 am]

BILLING CODE 4310–4J–P

DEPARTMENT OF THE INTERIOR

Bureau of Land Management

[AZ–070–03–1232–EA, AZ–SRP–070–04–01 and AZ–SRP–070–04–02]

Temporary Closure of Selected Public Lands in La Paz County, Arizona, During the Operation of the Parker 250 and Parker 425 Desert Races for 2004

AGENCY: Bureau of Land Management, Interior.

SUMMARY: The Bureau of Land Management Lake Havasu Field Office announces the temporary closure of selected public lands under its administration in La Paz County, Arizona. This action is being taken to help ensure public safety and prevent unnecessary environmental degradation during the officially permitted running of the 2004 KTM Parker 250, and the 2004 Blue Water Resort and Casino Parker 425 Desert Races. Areas subject to this temporary closure include all public lands including county maintained roads and highways located on public lands, that are located within two miles of the designated racecourse. The racecourse and closure areas are described in the **SUPPLEMENTARY INFORMATION** section of this notice, and maps of the designated racecourse are maintained in the Bureau of Land Management Lake Havasu Field Office, 2610 Sweetwater Avenue, Lake Havasu City, AZ 86406.

EVENT DATES: KTM Parker 250 on January 10, 2004, and Blue Water Resort and Casino Parker 425 on February 7, 2004.

FOR FURTHER INFORMATION CONTACT: Bryan Pittman, Field Staff Law Enforcement Ranger, BLM Lake Havasu Field Office, 2610 Sweetwater Avenue, Lake Havasu City, Arizona 86406, (928) 505–1200.

Dated: November 7, 2003.

Donald Ellsworth,

Field Manager, Lake Havasu Field Office.

SUPPLEMENTARY INFORMATION:

Description of Race Course Closed Area

Beginning at the eastern boundary of the Colorado River Indian Tribe (CRIT) Reservation, the race course runs east along Shea Road, then east along the Parker-Swansea Road to the Central Arizona Project Canal, then north, on the west side of the CAP Canal, crossing the canal on the maintained county road, running northeast into Mineral Wash Canyon, then southeast staying on the maintained county road, through the 4-corners intersection to Midway, then east on Transmission Pass Road through State Trust lands located in Butler Valley, turning north into Cunningham Wash to North Tank. Back south to the Transmission Pass Road and east (reentering public land) within two miles of Alamo Dam Road. The race course turns south and west onto the wooden power line road, onto the State Trust lands in Butler Valley, turning southwest into Cunningham Wash to the Graham Well, intersecting Butler Valley Road, then north and west onto public lands proceeding west to the ''Bouse Y'' intersection, located two miles north of Bouse, Arizona. The route then proceeds north, paralleling the Bouse-Midway Road to Midway. From Midway, it goes west on the north boundary road of the East Cactus Plain Wilderness Area to the Parker-Swansea Road. The route then goes west in Osborne Wash, south of the Parker-Swansea Road to the CAP Canal, along the north boundary of the Cactus Plain Wilderness Study Area, staying in Osborne Wash, and then proceeds west in Osborne Wash to the CRIT Reservation boundary.

Times of the Temporary Land Closure

The KTM Parker 250 Desert Race closure is in effect from 2 p.m. (m.s.t.) on Friday, January 9, 2004, through 5 p.m. (m.s.t.) on Saturday, January 10, 2004. The Blue Water Resort and Casino Parker 425 Desert Race closure is in effect from 2 p.m. (m.s.t.) on Friday, February 6, 2004, through 11:59 p.m. (m.s.t.) on Saturday, February 7, 2004.

Prohibited Acts

The following acts are prohibited during the temporary land closure:

1. Being present on, or driving on, the designated racecourse. This does not apply to race participants, race officials and emergency vehicles.
2. Vehicle parking or stopping in areas affected by the closure, except where such is specifically allowed (designated spectator areas).
3. Camping in any area, except in the designated spectator areas.
4. Discharge of firearms.
5. Possession or use of any fireworks.
6. Cutting or collecting firewood of any kind, including dead and down wood or other vegetative material.
7. Operate any vehicle (except registered race vehicles), including off-highway vehicles, not registered and equipped for street and highway operation.
8. Operate any vehicle in the area of the closure at a speed of more than 35 mph. This does not apply to registered race vehicles during the race, while on the designated racecourse.
9. Park any vehicle in violation of posted restrictions.
10. Park any vehicle in a manner that obstructs or impedes normal traffic movement.
11. Drive any vehicle around or past any ''road closed'' sign or traffic control barrier.
12. Fail to obey any person authorized to direct traffic, including law enforcement officers and designated race officials.
13. Fail to observe Spectator Area quiet hours of 10 p.m. to 6 a.m.
14. Fail to keep campsite or race viewing site free of trash and litter.
15. Allow any pet or other animal to be unrestrained by a leash of not more than 6 feet in length.

The above restrictions do not apply to emergency vehicles and vehicles owned by the United States, the State of Arizona, or La Paz County. Authority for closure of public lands is found in section 303(a) of the Federal Land Policy and Management Act of 1976 (43 U.S.C. 1733(a)) and 43 CFR 8360.0–7. Any person who violates this restriction may be tried before a United States Magistrate and fined no more than $1,000, or imprisoned for no more than 12 months, or both. Such violations may also be subject to the enhanced fines provided for by 18 U.S.C. 3571.

[FR Doc. 03–32237 Filed 12–30–03; 8:45 am]

BILLING CODE 4310–32–P

DEPARTMENT OF THE INTERIOR

Bureau of Land Management

[NM–020–1110–PC, NM–020–1220–PC]

Notice of Public Land Closure, Ute Mountain, Taos County, NM

AGENCY: Bureau of Land Management, Interior, Taos Field Office, New Mexico.

ACTION: Temporary closure of certain recently acquired public lands near Ute Mountain, Taos County, New Mexico, to public entry and use; notice.

SUMMARY: This notice closes to all public entry and use certain public lands managed by the Bureau of Land Management (BLM) in the vicinity of Ute Mountain, in Taos County, New Mexico, in order to protect the land and

its resources until BLM prepares a management plan for the area. Excepted from this emergency closure is the Rio Grande Gorge below the rim, which will remain open to foot travel and boating between June 1 and March 31 each year. Also excepted from the closure are certain official activities.

EFFECTIVE DATE: December 31, 2003.

ADDRESSES: Send inquiries or suggestions to the Taos Field Office, Bureau of Land Management, 226 Cruz Alta Road, Taos, NM 87571.

FOR ADDITIONAL INFORMATION CONTACT: Ron Huntsinger, Taos Field Office Manager, (505) 758–8851.

SUPPLEMENTARY INFORMATION:

I. Background

The land subject to this closure is part of a tract of land being acquired by BLM primarily because of its value as wildlife habitat and open space for recreation. The Ute Mountain property is situated within and adjacent to the Rio Grande Wild and Scenic River corridor north of Taos, New Mexico, on the New Mexico-Colorado border. This property offers spectacular views of the Rio Grande Gorge and the Sangre de Cristo Mountains and encompasses the entire extinct volcano called Ute Mountain. The land includes the mountainous and forested former volcano, high mesa desert with sagebrush-grasslands, cliffs of the gorge, and riparian areas along the Rio Grande.

Ute Mountain rises to 10,093 feet from an elevation of about 7,600 feet at its base and has been a private sanctuary for elk, deer, antelope, and other game. The land is host to large herds of deer and elk. The property also provides critical riparian and breeding habitat for peregrine falcon, golden eagle, brown trout, and the federally-listed endangered southwestern willow flycatcher and threatened bald eagle. The property is bordered by Bureau of Land Management (BLM) lands and private lands. The western edge of the property, the Rio Grande Gorge, is an active recreation area, providing river sports and associated camping, hunting, picnicking, and wilderness recreation.

The property being closed is a little more than half of the entire 14,344-acre Ute Mountain Property. The Trust for Public Land (TPL) and BLM have completed the first phase of a multi-year effort to preserve Ute Mountain. TPL, a national non-profit land conservation organization, conveyed to BLM 7,924 acres of the Ute Mountain property, bringing part of one of New Mexico's most notable landscapes into permanent protection. When completed, the Ute Mountain property will be protected from development, leaving open a critical migratory wildlife corridor and adding approximately 7 miles of the Rio Grande to the active recreation area. BLM will manage the land, located within the Rio Grande Wild and Scenic River corridor, to protect its open space, recreational, and habitat values.

II. Lands Affected

This order affects public land in Taos County, New Mexico, described as: A certain tract of land near Costilla, Taos County, New Mexico; within the Sangre de Cristo Grant; described as part of projected Sections 24, 25, and 36, Township 32 North, Range 11 East; part of projected Sections 1, 2, 11, 12, and 13, Township 31 North, Range 11 East; part of projected Sections 19, 20, 21, 28, and 33, and all of projected Sections 29, 30, 31, and 32, Township 32 North, Range 12 East; part of projected Sections 4, 5, 8, 17, and 18, and all of projected Sections 6 and 7, Township 31 North, Range 12 East of the New Mexico principal meridian (New Mexico system); and further described as part of Tract ''A'' shown on a plat entitled ''A Survey of the Westerly Portion of the Sangre de Cristo Grant,'' by Leo Archuleta, NMLS no. 4249, dated February 1980.

This tract contains 7923.85 acres, more or less; all as shown on a survey plat entitled ''Robert Starks to the Trust for Public Land'' RGSS survey no. L203-A1, by Scott B. Crowl, NMLS no. 12441, dated June 16, 2003, as revised August 27, 2003.

III. Closure

In compliance with 43 CFR 8364.1(c), notice is hereby given that BLM is closing the public lands in the Ute Mountain Property. These restrictions will be in effect year-round from December 31, 2003, until rescinded by BLM. The order to close these lands is needed to protect the public land resources there until the land use plan for the tract is complete. BLM is establishing and will administer this emergency closure under the authority of 43 CFR 8364.1.

BLM finds good cause to publish this closure notice effective on the date of publication and without providing for public comment due to the immediate need to protect the habitat for the endangered and threatened species in the tract. Also, the regulations on Closures and Restrictions at 43 CFR 8364.1 do not require publication of a request for comments.

BLM hereby closes the described public lands to all entry and use, except for the Rio Grande Gorge below the rim, which will remain open to foot travel and boating between June 1 and March 31. Any person who fails to comply with this order may be subject to the penalties provided in 43 CFR 8360.0–7.

This closure will remain in effect until BLM completes the acquisition of the property, expected to occur no later than the end of FY 2005. At that time BLM will prepare a management plan with input from local residents and other interested parties. During this closure period, BLM will consult with the public and develop a process for completing a management plan for the area.

BLM will post closure signs at main entry points and trails in the area indicating the area closed and explaining the reason for the closure. Maps of the closure area and more detailed information are on file at the Taos Field Office.

IV. Exceptions

The following persons are exempt from this order: all Federal, State, and local officers or employees in the scope of their duties, members of any organized rescue or fire-fighting force in performance of an official duty, and persons authorized in writing by the Bureau of Land Management.

Dated: November 21, 2003.

Paul Williams,

Acting Field Office Manager.

[FR Doc. 03–32239 Filed 12–30–03; 8:45 am]

BILLING CODE 4310–40–P

DEPARTMENT OF THE INTERIOR

Bureau of Land Management

[UT–020–03–2821–HU–Q157]

Emergency Restriction on Public Lands: Tooele County, UT

AGENCY: Bureau of Land Management, Interior.

ACTION: Emergency restriction on public land in Tooele County, Utah.

SUMMARY: The Salt Lake Field Office, Bureau of Land Management (BLM) is giving notice it is temporarily restricting a portion of public lands from all forms of public use from November 15, 2003, to November 15, 2005. The restricted area is near Stockton, Tooele County, Utah. The affected public lands include:

T. 4 S., R. 4 W., SLM,
Sec. 18, all public lands in the SW1/4,
Sec. 19, all public lands in the NW1/4NW1/4;
T. 4 S., R. 5 W.,
Sec. 13, all public lands east of Highway #36 in the E1/2SE1/4,
Sec. 24, all public lands in the NE1/4NE1/4.

The area closed contains 240 acres, more or less.

All public use within the above designated area will not be allowed during this temporary restriction in order to protect the public health and safety, allow for successful rehabilitation activities, reestablishment of native vegetation and prevent the spread of noxious and invasive weed species. BLM will post signs at all entry points to the area. You may obtain maps of the restricted area and information from the BLM Salt Lake Field Office.

DATES: This restriction will be in effect from December 31, 2003, until November 15, 2005. At the end of this 2 year period, BLM will evaluate the level of public health and safety and the success of the rehabilitation and determine if the restriction should be continued for an additional period of time.

FOR FURTHER INFORMATION CONTACT: Michael Nelson, Realty Specialist at 2370 S. 2300 W. Salt Lake City, Utah 84119, (801) 977–4355.

Discussion of the Rules: This restriction to public access and use will serve to protect the health and safety of the public from exposure to high levels of lead and arsenic present in historic mine tailings within the area of the Bauer Fire #Q157, a lightning-caused wildfire that began on July 25, 2003, and was controlled on July 27, 2003. The area where the wildfire occurred is within an urban interface heavily used for Off Highway Vehicles (OHV) play, target shooting activities, and other forms of dispersed recreation. In order to protect the public from exposure to hazardous mine tailings recently found to occur in the area, prevent the spread of noxious weeds, and allow for the successful reestablishment of vegetation on the recently burned steep slopes, the area must be temporarily restricted from all forms of public use.

A map depicting the restricted area is available for public inspection at the Bureau of Land Management, Salt Lake Field Office. Therefore, we find good cause to make this restriction effective immediately, notwithstanding the notice and comment requirements of the Administrative Procedure Act, 5 U.S.C. 553. Under the authority of 43 CFR 9268.3(d)(1)(I) and 43 CFR 8364.1(a), BLM will enforce the following rule on public lands within the restricted area: You must not enter the restricted area.

Exemptions: Persons who are exempt from these rules include: (1) Any Federal, State, or local officer or employee in the scope of their duties; (2) Members of any organized rescue or fire-fighting force in performance of an official duty; and (3) Any person authorized in writing by the Bureau of Land Management.

Penalties: The authorities for this closure are section 303(a) of the Federal Land Policy and Management Act of 1976 (43 U.S.C. 1733(a)) and 43 CFR 8360.0–7. Any person who violates this restriction may be tried before a United States Magistrate and fined no more than $1,000 or imprisoned for no more than 12 months, or both. Such violations may also be subject to the enhanced fines provided for by 18 U.S.C. 3571.

Dated: November 12, 2003.

Glenn A. Carpenter,

Field Office Manager, Salt Lake Field Office.

[FR Doc. 03–32238 Filed 12–30–03; 8:45 am]

BILLING CODE 4310–$$–P

DEPARTMENT OF THE INTERIOR

Bureau of Land Management

[MT–060–01–1020–PG]

Notice of Public Meeting; Central Montana Resource Advisory Council

AGENCY: Bureau of Land Management, Interior.

ACTION: Notice of public meeting.

SUMMARY: In accordance with the Federal Land Policy and Management Act and the Federal Advisory Committee Act of 1972, the U.S. Department of the Interior, Bureau of Land Management (BLM) Central Montana Resource Advisory Council (RAC) will meet as indicated below.

DATES: The meeting will be held January 28, 2004, at the BLM's Lewistown Field Office on Airport Road, in Lewistown, Montana, beginning at 8 a.m. A 60-minute public comment period will begin at 8 a.m. The meeting is scheduled to adjourn at approximately 4:30 p.m.

SUPPLEMENTARY INFORMATION: The 15-member council advises the Secretary on a variety of management issues associated with public land management in Montana. At this meeting the council plans to discuss:

The access and transportation issue in the Upper Missouri River Breaks National Monument Resource Management Plan

All meetings are open to the public. The public may present written comments to the RAC. Each formal RAC meeting will also have time allocated for hearing public comments. Depending on the number of persons wishing to comment and time available, the time for individual oral comments may be limited.

FOR FURTHER INFORMATON CONTACT: Dave Mari, Lewistown Field Manager, Lewistown Field Office, Airport Road, Lewistown, MT 59457, 406/538–7461.

Dated: December 19, 2003.

Michael P. Stewart,

Associate Lewistown Field Manager.

[FR Doc. 03–32132 Filed 12–30–03; 8:45 am]

BILLING CODE 4310–$$–P

DEPARTMENT OF THE INTERIOR

Bureau of Land Management

[NV–010–1430–FM; N–74293]

Termination of Segregation, Exchange N–74293; Nevada

AGENCY: Bureau of Land Management, Interior.

ACTION: Notice of termination of segregation.

SUMMARY: This action terminates the segregation of the Exchange Proposal N–74293 initiated by Nevada Land and Resource Company, LLC. The land will be opened to the operation of the public land laws, including location and entry under the mining laws.

EFFECTIVE DATE: March 1, 2004.

FOR FURTHER INFORMATION CONTACT: Helen Hankins, Elko Field Office, 3900 E. Idaho St., Elko, Nevada 89801, 775–753–0200.

SUPPLEMENTARY INFORMATION: On May 4, 2001, the land described below was segregated as to a proposed exchange with Nevada Land and Resource Company, LLC. The exchange is no longer being pursued on the lands identified below. The segregative effect is hereby terminated for the following described land:

Mount Diablo Meridian, Nevada

T. 36 N., R. 64 E.,
Section 2, (All) Lots 1—4, S½ ,N½, S½;
Section 4, Lots 1—4, S ½NE¼, S½ NW¼, N½SW¼, SE¼;
Section 10, All;
Section 12, All;
Section 14, All;
Section 16, All;
Section 22, All;
Section 24, All.

T. 37 N., R. 64 E.,
Section 2, (All) Lots 1—4, S½ N½, S½;
Section 4, (All) Lots 1—4, S½ N½, S½;
Section 8, All;
Section 10, All;
Section 12, All;
Section 16, All;
Section 22, All;
Section 24, All;
Section 26, All;
Section 28, All;

Section 32, All;
Section 34, All;
Section 36, N½.
T. 38 N., R. 64 E.,
Section 26, Lots 1—6, S½;
Section 28, All;
Section 32, All;
Section 34, All;
Section 36, All.
T. 37 N., R. 65 E.,
Section 6, (All) Lots 1—8, S½NE¼, SE¼NW¼, E½SW¼, S½E½;
Section 18, (All) lots 1—4, E½W½, E½;
Section 30, (All) Lots 1—4, E½W½, E½.
The area described contains 18,260.14 acres in Elko County.

1. At 9 a.m. on March 1, 2004, the land described above will be opened to the operation of the public land laws, subject to valid existing rights, the provisions of existing withdrawals, other segregations of record an the requirements of applicable law. All valid applications received at or prior to 9 a.m. March 1, 2004, shall be considered as simultaneously filed at that time. Those received thereafter shall be considered in the order of filing.

2. At 9 a.m. on March 1, 2004, the land described will be opened to location and entry under the United States mining laws, subject to valid existing rights, the provisions of existing withdrawals, other segregations of record and the requirements of applicable law. Appropriation of any of the land described in this order under the general mining laws prior to the date and time of segregation is unauthorized. Any such attempted appropriation, including attempted adverse possession under 30 U.S.C. 39 (1994), shall vest no rights against the United States. Act required to establish a location and to initiate a right of possession are governed by State law where not in conflict with Federal law. The Bureau of Land Management will not intervene in disputes between rival locators over possessory rights because Congress has provided for such determination in local courts.

Dated: November 25, 2003.

David Stout,

Associate Field Manager.

[FR Doc. 03–32235 Filed 12–30–03; 8:45 am]

BILLING CODE 4310–HC–P

DEPARTMENT OF THE INTERIOR

Bureau of Land Management

[CA–660–1430–ET, CACA 43949]

Notice of Proposed Withdrawal, Transfer of Jurisdiction, and Notice of Public Meeting; California

AGENCY: Bureau of Land Management, Interior.

ACTION: Notice of withdrawal

SUMMARY: The Department of the Navy has filed an application to withdraw approximately 3,005.99 acres of public lands for use as a mountain warfare training facility. Due to the sensitive nature of the training, the Department of the Navy has requested that administrative jurisdiction of the land be transferred from the Bureau of Land Management to the Department of the Navy.

DATES: The Department of the Navy will conduct a public meeting on January 13, 2004, from 4 to 8 p.m. at the Mountain Empire Community Center at 976 Sheridan Road, Campo, California 91906. The purpose of that meeting will be to explain the reason for the proposed withdrawal and to seek scoping comments from the public. Comments must be received by March 30, 2004.

ADDRESSES: Comments should be sent to Howard K. Stark, Chief, Branch of Lands (CA–930), Bureau of Land Management, 2800 Cottage Way, Suite 1834, Sacramento, California, 95825–1886.

FOR FURTHER INFORMATION CONTACT: Duane Marti, Realty Specialist, (916) 978–4675.

SUPPLEMENTARY INFORMATION:

1. The Department of the Navy has filed an application to withdraw the following described public lands from settlement, sale, location, or entry under the general land laws, including mining laws, subject to valid existing rights, for use as a military training facility:

San Bernardino Meridian

T.17 S., R. 5 E.,
Sec. 13, lots 8 & 9;
Sec. 14, W½;
Sec. 15, SE¼NE¼, S½SE¼;
Sec. 22, lots 1 & 2, NE¼, E½NW¼, E½SW¼, W½SE¼;
Sec. 23, lots 1 & 2, N½, E½SW¼, SE¼;
Sec. 24, lots 4, 5, 20 & 22, SW¼SW¼;
Sec. 25, W½;
Sec. 26, lots 1, 2, NE¼, E½NW¼, NE¼SW¼, N½SE¼, SE¼SE¼;
Sec. 27, lots 1, 9 & 10;
Sec. 34, lot 7, NE¼SE¼;
Sec. 35, lots 2, 3 & 4, NE¼, S½NW¼, N½SW¼, N½SE¼.
T.18 S., R. 5 E.,
Sec. 2, NE¼NE¼.

The area described contains approximately 3,005.99 acres in San Diego County, California.

2. The Department of the Navy has requested that jurisdiction of the lands described in paragraph 1 above be transferred to the Department of the Navy, so the land can be managed for use as a mountain warfare training facility, subject to valid existing rights.

3. For a period of 90 days from the date of publication of this notice, all persons who wish to submit comments, suggestions or objections, may present their views in writing to the Chief, Branch of Lands Management, California State Office, Bureau of Land Management, at the address listed above.

4. The application will be processed in accordance with the regulations set forth in 43 Code of Federal Regulations 2300.

5. In accordance with 43 Code of Federal Regulations 2310.2, the lands in paragraph 1 above are, for a period of 2 years from the date of publication of this Notice in the **Federal Register**, segregated from entry and appropriation under the public land laws, including the mining laws. The Bureau of Land Management may, after consulting with the Department of the Navy, allow temporary uses that are determined to be compatible with the proposed withdrawal.

Dated: November 26, 2003.

Howard K. Stark,

Chief, Branch of Lands Management.

[FR Doc. 03–32225 Filed 12–30–03; 8:45 am]

BILLING CODE 4310–40–P

DEPARTMENT OF THE INTERIOR

Bureau of Land Management

[NMNM 103820]

Notice of Addition of Lands to Proposed Withdrawal; New Mexico

AGENCY: Bureau of Land Management, Interior.

ACTION: Notice of withdrawal.

SUMMARY: The United States Forest Service has filed a request to add 739.71 acres to their withdrawal application in aid of legislation for the proposed Global Settlement with the Pueblo of San Idelfonso, in Rio Arriba County, New Mexico. The original notice of proposed withdrawal was published in the **Federal Register**, 67 FR 7193, February 15, 2002, and segregated the lands described therein from location under the United States mining laws, subject to valid existing rights. This

notice shall not operate to extend the segregation for the lands described in the original notice. The segregation is necessary to provide protection of these additional lands for relief of legislation during the negotiation of the proposed Global Settlement with the San Idelfonso Pueblo (*Pueblo of San Idelfonso* v. *the United States of America*—Docket No. 354 Court of Federal Claims).

DATES: Comments should be received on or before March 30, 2004.

ADDRESSES: Comments should be sent to the Forest Supervisor, Santa Fe National Forest, 1474 Rodeo Road, P.O. Box 1689, Santa Fe, New Mexico 87504–1689.

FOR FURTHER INFORMATION CONTACT: Michael Frazier, Santa Fe National Forest, 505–438–7824.

SUPPLEMENTARY INFORMATION: The Forest Service proposes to add certain lands to its existing withdrawal application. These lands are in addition to those published in the **Federal Register**, 67 FR 7193, February 15, 2002. The following described public lands are to be withdrawn from location under the United States mining laws, subject to valid existing rights.

Santa Fe National Forest, New Mexico Principal Meridian

T. 20 N., R. 7 E.,
Sec. 17, NE¼NE¼SE¼, NW¼NW¼SE¼, N½N½SW¼, S½SE¼SE¼, W½W½SW¼SW¼, W½E½W½SW¼SW¼, E½E½W½SW¼SW¼, E½SW¼SW¼, SW¼SE¼, and SE¼SW¼;
Sec. 18, S½S½SE¼, N½S½SE¼, N½SE¼, and SW¼;
Sec. 19, a portion of Tract 37 (11.26 acres), lot 5, and N½N½NE¼ (also a portion of Tract 40);
Sec. 20, NW¼NE¼, N½N½NE¼NW¼, N½S½N½NE¼NW¼ (also Tract 41), S½S½N½NE¼NW¼, S½NE¼NW¼, and NW¼NW¼ (also a portion of Tract 40);
Sec. 21, lot 3.
The area described contains 739.71 acres in Rio Arriba County.

For a period of 90 days from the date of publication of this notice, all persons who wish to submit comments, suggestions, or objections in connection with the addition of lands to the proposed withdrawal may present their views in writing to the Forest Supervisor of the Santa Fe National Forest.

Notice is hereby given that a public meeting in connection with the proposed withdrawal will be held at a later date. A notice of time and place will be published in the **Federal Register** and a newspaper in the general vicinity of the lands to be withdrawn at least 30 days before the scheduled date of the meeting.

From the date of publication of this notice in the **Federal Register**, the additional described lands will be segregated until February 14, 2004, as specified above unless the application is denied or canceled or the withdrawal is approved prior to that date.

Dated: November 25, 2003.

Carsten F. Goff,

Deputy State Director, Minerals and Lands.

[FR Doc. 03–32236 Filed 12–30–03; 8:45 am]

BILLING CODE 3410–11–P

INTERNATIONAL TRADE COMMISSION

[Inv. Nos. TA–131–28 and TA–2104–10]

U.S.-Andean Countries Free Trade Agreement: Advice Concerning the Probable Economic Effect of Providing Duty-Free Treatment for Imports

AGENCY: International Trade Commission.

ACTION: Institution of investigation and scheduling of public hearing.

EFFECTIVE DATE: December 24, 2003.

SUMMARY: Following receipt of a request on December 8, 2003, from the United States Trade Representative (USTR), the Commission instituted investigation Nos. TA–131–28 and TA–2104–10, *U.S.-Andean Countries Free Trade Agreement: Advice Concerning the Probable Economic Effect of Providing Duty-Free Treatment for Imports,* under section 131 of the Trade Act of 1974 and section 2104(b)(2) of the Trade Act of 2002.

FOR FURTHER INFORMATION CONTACT: Information specific to this investigation may be obtained from Dennis Fravel (202–205–3404; *fravel@usitc.gov*), or Tracy Quilter (202–205–3437; *tquilter@usitc.gov*), Office of Industries, United States International Trade Commission, Washington, DC, 20436. For information on the legal aspects of this investigation, contact William Gearhart of the Office of the General Counsel (202–205–3091; *wgearhart@usitc.gov*). General information concerning the Commission may also be obtained by accessing its Internet server (*http://www.usitc.gov*).

Background: On November 18, 2003, the USTR notified the Congress of the President's intent to initiate a free trade agreement with Colombia, Peru, Ecuador, and Bolivia, the four Andean Trade Preference Act beneficiary countries. Accordingly, the USTR, pursuant to section 131 of the Trade Act of 1974 (19 U.S.C. 2151), requested the Commission to provide a report including advice as to the probable economic effect of providing duty-free treatment for imports of products from the Andean countries as a group (i) on industries in the United States producing like or directly competitive products, and (ii) on consumers. In preparing its advice, the Commission's analysis will consider each article in chapters 1 through 97 of the Harmonized Tariff Schedule of the United States for which U.S. tariffs will remain after the United States fully implements its Uruguay Round tariff commitments. The import advice will be based on the 2003 Harmonized Tariff System nomenclature and 2002 trade data. The advice with respect to the removal of U.S. duties on imports from the Andean countries will assume that any known U.S. nontariff barrier will not be applicable to such imports. The Commission will note in its report any instance in which the continued application of a U.S. nontariff barrier to such imports would result in different advice with respect to the effect of the removal of the duty.

As also requested, pursuant to section 2104(b)(2) of the Trade Act of 2002 (19 U.S.C. 3804(b)(2)), the Commission will provide advice as to the probable economic effect of eliminating tariffs on imports of certain agricultural products of the Andean countries on (i) industries in the United States producing the product concerned, and (ii) the U.S. economy as a whole.

The Commission expects to provide its report to USTR by April 8, 2004. USTR indicated that the Commission's report will be classified and considered to be an interagency memorandum containing pre-decisional advice and subject to the deliberative process privilege.

Public Hearing: A public hearing in connection with the investigation will be held at the U.S. International Trade Commission Building, 500 E Street, SW., Washington, DC, beginning at 9:30 a.m. on February 10, 2004. Requests to appear at the public hearing should be filed with the Secretary, no later than 5:15 p.m., January 23, 2004, in accordance with the requirements in the ''Submissions'' section below. In the event that, as of the close of business on January 23, 2004, no witnesses are scheduled to appear at the hearing, the hearing will be canceled. Any person interested in attending the hearing as an observer or non-participant may call the Secretary (202–205–2000) after January 23, 2004, to determine whether the hearing will be held. This will be a joint hearing at which the Commission will

also take testimony in connection with its investigation *U.S.-Panama Free Trade Agreement: Advice Concerning the Probable Economic Effect of Providing Duty-Free Treatment for Imports* (investigation Nos. TA–131–27 and TA–2104–9).

Statements and Briefs: In lieu of or in addition to participating in the hearing, interested parties are invited to submit written statements or briefs concerning the investigation in accordance with the requirements in the ''Submissions'' section below. Any prehearing briefs or statements should be filed not later than 5:15 p.m., January 26, 2004; the deadline for filing post-hearing briefs or statements is 5:15 p.m., February 17, 2004.

Submissions: All written submissions including requests to appear at the hearing, statements, and briefs, should be addressed to the Secretary, United States International Trade Commission, 500 E Street, SW., Washington, DC 20436. All written submissions must conform with the provisions of section 201.8 of the *Commission's Rules of Practice and Procedure* (19 CFR 201.8); any submissions that contain confidential business information must also conform with the requirements of section 201.6 of the *Commission's Rules of Practice and Procedure* (19 CFR 201.6). Section 201.8 of the rules require that a signed original (or a copy designated as an original) and fourteen (14) copies of each document be filed. In the event that confidential treatment of the document is requested, at least four (4) additional copies must be filed, in which the confidential information must be deleted. Section 201.6 of the rules require that the cover of the document and the individual pages clearly be marked as to whether they are the ''confidential'' or ''nonconfidential'' version, and that the confidential business information be clearly identified by means of brackets.

The Commission's rules do not authorize filing submissions with the Secretary by facsimile or electronic means, except to the extent permitted by section 201.8 of the Commission's Rules (19 CFR 201.8)(see Handbook for Electronic Filing Procedures, *ftp://ftp.usitc.gov/pub/reports/electronic_filing_handbook.pdf).* Persons with questions regarding electronic filing should contact the Secretary (202–205–2000 or *edis@usitc.gov*).

All written submissions, except for confidential business information, will be made available for inspection by interested parties. Accordingly, any confidential business information received by the Commission in this investigation and used in preparing the report will not be published in a manner that would reveal the operations of the firm supplying the information.

The public record for this investigation may be viewed on the Commission's electronic docket (EDIS) at *http://edis.usitc.gov.* Hearing-impaired individuals are advised that information on this matter can be obtained by contacting our TDD terminal on (202) 205–1810. Persons with mobility impairments who will need special assistance in gaining access to the Commission should contact the Office of the Secretary at 202–205–2000.

List of Subjects

Andean countries, imports, and tariffs.

Issued: December 24, 2003.

By order of the Commission.

Marilyn R. Abbott,

Secretary to the Commission.

[FR Doc. 03–32240 Filed 12–30–03; 8:45 am]

BILLING CODE 7020–02–P

INTERNATIONAL TRADE COMMISSION

[Investigation Nos. TA–131–27 and TA–2104–9]

U.S.-Panama Free Trade Agreement: Advice Concerning the Probable Economic Effect of Providing Duty-Free Treatment for Imports

AGENCY: International Trade Commission.

ACTION: Institution of investigations and scheduling of hearing.

EFFECTIVE DATE: December 24, 2003.

SUMMARY: Following receipt of a request on December 8, 2003, from the United States Trade Representative (USTR), the Commission instituted investigation Nos. TA–131–27 and TA–2104–9, *U.S.-Panama Free Trade Agreement: Advice Concerning the Probable Economic Effect of Providing Duty-Free Treatment for Imports,* under section 131 of the Trade Act of 1974 and section 2104(b)(2) of the Trade Act of 2002.

FOR FURTHER INFORMATION CONTACT: Information specific to these investigations may be obtained from Queena Fan, Project Leader (202–205–3055; *qfan@usitc.gov*), or Tracy Quilter, Deputy Project Leader (202–205–3437; *tquilter@usitc.gov*), Office of Industries, United States International Trade Commission, Washington, DC, 20436. For information on the legal aspects of these investigations, contact William Gearhart of the Office of the General Counsel (202–205–3091; *wgearhart@usitc.gov*). General information concerning the Commission may also be obtained by accessing its Internet server (*http://www.usitc.gov*).

Background: On November 18, 2003, the USTR notified the Congress of the President's intent to initiate free trade agreement negotiations with Panama. Accordingly, the USTR, pursuant to section 131 of the Trade Act of 1974 (19 U.S.C. 2151), requested the Commission to provide a report including advice as to the probable economic effect of providing duty-free treatment for imports of products of Panama (i) on industries in the United States producing like or directly competitive products, and (ii) on consumers. In preparing the advice, the Commission's analysis will consider each article in chapters 1 through 97 of the Harmonized Tariff Schedule of the United States for which U.S. tariffs will remain after the United States fully implements its Uruguay Round tariff commitments. The import advice will be based on the 2003 Harmonized Tariff System nomenclature and 2002 trade data. The advice with respect to the removal of U.S. duties on imports from Panama will assume that any known U.S. nontariff barrier will not be applicable to such imports. The Commission will note in its report any instance in which the continued application of a U.S. nontariff barrier to such imports would result in different advice with respect to the effect of the removal of the duty.

As also requested, pursuant to section 2104(b)(2) of the Trade Act of 2002 (19 U.S.C. 3804(b)(2)), the Commission will provide advice as to the probable economic effect of eliminating tariffs on imports of certain agricultural products of Panama on (i) industries in the United States producing the product concerned, and (ii) the U.S. economy as a whole.

The Commission expects to provide its report to the USTR by April 8, 2004. The USTR indicated that the Commission's report will be classified and considered to be an interagency memorandum containing pre-decisional advice and subject to the deliberative process privilege.

Public Hearing: A public hearing in connection with the investigations will be held at the U.S. International Trade Commission Building, 500 E Street, SW., Washington, DC beginning at 9:30 a.m. on February 10, 2004. Requests to appear at the public hearing should be filed with the Secretary, no later than 5:15 p.m., January 23, 2004, in accordance with the requirements in the ''Submissions'' section below. In the event that, as of the close of business on

January 23, 2004, no witnesses are scheduled to appear at the hearing, the hearing will be canceled. Any person interested in attending the hearing as an observer or non-participant may call the Secretary (202–205–2000) after January 23, 2004, to determine whether the hearing will be held. This will be a joint hearing at which the Commission will also take testimony in connection with its investigations *U.S.-Andean Countries Free Trade Agreement: Advice Concerning the Probable Economic Effect of Providing Duty-Free Treatment for Imports* (investigation Nos. TA–131–28 and TA–2104–10).

Statements and Briefs: In lieu of or in addition to participating in the hearing, interested parties are invited to submit written statements or briefs concerning the investigation in accordance with the requirements in the ''Submissions'' section below. Any prehearing briefs or statements should be filed not later than 5:15 p.m., January 26, 2004; the deadline for filing post-hearing briefs or statements is 5:15 p.m., February 17, 2004. To be assured of consideration by the Commission, written statements relating to the Commission's report should be submitted to the Commission at the earliest practical date and should be received no later than the close of business on February 17, 2004.

Submissions: All written submissions including requests to appear at the hearing, statements, and briefs should be addressed to the Secretary, United States International Trade Commission, 500 E Street, SW., Washington, DC 20436. All written submissions must conform with the provisions of section 201.8 of the *Commission's Rules of Practice and Procedure* (19 CFR 201.8); any submissions that contain confidential business information must also conform with the requirements of section 201.6 of the *Commission's Rules of Practice and Procedure* (19 CFR 201.6). Section 201.8 of the rules require that a signed original (or a copy designated as an original) and fourteen (14) copies of each document be filed. In the event that confidential treatment of the document is requested, at least four (4) additional copies must be filed, in which the confidential information must be deleted. Section 201.6 of the rules require that the cover of the document and the individual pages be clearly marked as to whether they are the ''confidential'' or ''nonconfidential'' version, and that the confidential business information be clearly identified by means of brackets.

The Commission's rules do not authorize filing submissions with the Secretary by facsimile or electronic means, except to the extent permitted by section 201.8 of the Commission's Rules (19 CFR 201.8) (see Handbook for Electronic Filing Procedures, *ftp://ftp.usitc.gov/pub/reports/electronic_filing_handbook.pdf).* Persons with questions regarding electronic filing should contact the Secretary (202–205–2000 or *edis@usitc.gov*).

All written submissions, except for confidential business information, will be made available for inspection by interested parties. Accordingly, any confidential business information received by the Commission in these investigations and used in preparing the report will not be published in a manner that would reveal the operations of the firm supplying the information.

The public record for these investigations may be viewed on the Commission's electronic docket (EDIS) at *http://edis.usitc.gov.* Hearing-impaired individuals are advised that information on this matter can be obtained by contacting our TDD terminal on (202) 205–1810. Persons with mobility impairments who will need special assistance in gaining access to the Commission should contact the Office of the Secretary at 202–205–2000.

List of Subjects

Panama, imports, and tariffs.

Issued: December 24, 2003.

By order of the Commission.

Marilyn R. Abbott,

Secretary to the Commission.

[FR Doc. 03–32241 Filed 12–30–03; 8:45 am]

BILLING CODE 7020–02–P

DEPARTMENT OF JUSTICE

Bureau of Alcohol, Tobacco, Firearms, and Explosives

Agency Information Collection Activities: Proposed Collection; Comments Requested

ACTION: 30-Day notice of information collection under review: Extension of a currently approved collection; release and receipt of imported firearms, ammunition and implements of war.

The Department of Justice (DOJ), Bureau of Alcohol, Tobacco, Firearms and Explosives (ATF) has submitted the following information collection request to the Office of Management and Budget (OMB) for review and approval in accordance with the Paperwork Reduction Act of 1995. The proposed information collection is published to obtain comments from the public and affected agencies. This proposed information collection was previously published in the **Federal Register** Volume 68, Number 200, pages 59637 on October 16, 2003, allowing for a 60 day comment period.

The purpose of this notice is to allow for an additional 30 days for public comment until January 30, 2004. This process is conducted in accordance with 5 CFR 1320.10.

Written comments and/or suggestions regarding the items contained in this notice, especially the estimated public burden and associated response time, should be directed to The Office of Management and Budget, Office of Information and Regulatory Affairs, Attention Department of Justice Desk Officer, Washington, DC 20503. Additionally, comments may be submitted to OMB via facsimile to (202) 395–5806. Written comments and suggestions from the public and affected agencies concerning the proposed collection of information are encouraged. Your comments should address one or more of the following four points:

(1) Evaluate whether the proposed collection of information is necessary for the proper performance of the functions of the agency, including whether the information will have practical utility;

(2) Evaluate the accuracy of the agencies estimate of the burden of the proposed collection of information, including the validity of the methodology and assumptions used;

(3) Enhance the quality, utility, and clarity of the information to be collected; and

(4) Minimize the burden of the collection of information on those who are to respond, including through the use of appropriate automated, electronic, mechanical, or other technological collection techniques or other forms of information technology, e.g., permitting electronic submission of responses.

Overview of This Information Collection

(1) *Type of Information Collection:* Extension of a currently approved collection.

(2) *Title of the Form/Collection:* Release and Receipt of Imported Firearms, Ammunition and Implements of War.

(3) *Agency form number, if any, and the applicable component of the Department of Justice sponsoring the collection:* Form Number: ATF F 6A (5330.3C). Bureau of Alcohol, Tobacco, Firearms and Explosives, Department of Justice.

(4) *Affected public who will be asked or required to respond, as well as a brief*

abstract: Primary: Individuals or households. Other: Business or other for-profit, Not-for-profit institutions. The data provided by this information collection request is used by ATF to determine if articles imported meet the statutory and regulatory criteria for importation and if the articles shown on the permit application have been actually imported.

(5) An estimate of the total number of respondents and the amount of time estimated for an average respondent to respond: It is estimated that 20,000 respondents will complete a 24-minute form.

(6) An estimate of the total public burden (in hours) associated with the collection: There are 8,000 estimated annual total burden hours associated with this collection.

FOR FURTHER INFORMATION CONTACT: Brenda E. Dyer, Deputy Clearance Officer, United States Department of Justice, Policy and Planning Staff, Justice Management Division, Suite 1600, Patrick Henry Building, 601 D Street NW., Washington, DC 20530.

Dated: December 19, 2003.

Brenda E. Dyer,

Deputy Clearance Officer, United States Department of Justice.

[FR Doc. 03–32143 Filed 12–30–03; 8:45 am]

BILLING CODE 4410–FY–M

DEPARTMENT OF LABOR

Employee Benefits Security Administration

[Prohibited Transaction Exemption 2003–39; Application No. D–11100]

Class Exemption for the Release of Claims and Extensions of Credit in Connection With Litigation

AGENCY: Employee Benefits Security Administration, Department of Labor.

ACTION: Grant of class exemption.

SUMMARY: This document contains a final class exemption from certain prohibited transaction restrictions of the Employee Retirement Income Security Act of 1974 (ERISA or the Act) and from certain taxes imposed by the Internal Revenue Code of 1986, as amended (the Code). The exemption permits transactions engaged in by a plan, in connection with the settlement of litigation. This exemption was proposed in response to concerns raised by the pension community regarding the impact of ERISA's prohibited transaction provisions on the settlement of litigation by employee benefit plans with parties in interest. The exemption affects all employee benefit plans, the participants and beneficiaries of such plans, and parties in interest with respect to those plans engaging in the described transactions.

EFFECTIVE DATE: The exemption is effective January 1, 1975.

FOR FURTHER INFORMATION CONTACT: Andrea W. Selvaggio, Office of Exemption Determinations, Employee Benefits Security Administration, U.S. Department of Labor, Room N–5649, 200 Constitution Avenue NW., Washington, DC 20210 (202) 693–8540 (not a toll-free number).

SUPPLEMENTARY INFORMATION: On February 11, 2003, the Department published a notice in the **Federal Register** (68 FR 6953) of the pendency of a proposed class exemption from the restrictions of section 406(a)(1)(A), (B) and (D) of the Act and from the sanctions resulting from the application of section 4975 of the Code, by reason of section 4975(c)(1)(A), (B) and (D) of the Code. The Department proposed the class exemption on its own motion, pursuant to section 408(a) of the Act and section 4975(c)(2) of the Code, and in accordance with the procedures set forth in 29 CFR Part 2570 Subpart B (55 FR 32836, August 10, 1990).[1]

The notice of pendency gave interested persons an opportunity to comment or request a public hearing on the proposal. The Department received five (5) public comments. Upon consideration of all the comments received, the Department has determined to grant the proposed class exemption, subject to certain modifications. These modifications and the major comments are discussed below.

Executive Order 12866

Under Executive Order 12866, the Department must determine whether a regulatory action is ''significant'' and therefore subject to the requirements of the Executive Order and subject to review by the Office of Management and Budget (OMB). Under section 3(f), the order defines a ''significant regulatory action'' as an action that is likely to result in a rule (1) having an annual effect on the economy of $100 million or more, or adversely and materially affecting a sector of the economy, productivity, competition, jobs, the environment, public health or safety, or State, local or tribal governments or communities (also referred to as ''economically significant''); (2) creating serious inconsistency or otherwise interfering with an action taken or planned by another agency; (3) materially altering the budgetary impacts of entitlement grants, user fees, or loan programs or the rights and obligations of recipients thereof; or (4) raising novel legal or policy issues arising out of legal mandates, the President's priorities, or the principles set forth in the Executive Order.

Pursuant to the terms of the Executive Order, it was determined that this action is ''significant'' under Section 3(f)(4) of the Executive Order. Accordingly, this action has been reviewed by OMB.

Paperwork Reduction Act

In accordance with the Paperwork Reduction Act of 1995 (44 U.S.C. 3501–3520) (PRA 95), the Department submitted the information collection request (ICR) included in the Class Exemption For Release of Claims and Extensions of Credit in Connection With Litigation to the Office of Management and Budget (OMB) for review and clearance at the time the proposed class exemption was published in the **Federal Register** (February 11, 2003, 68 FR 6953). The ICR for the proposed class exemption was combined with the ICR in PTCE 94–71,[2] also approved under OMB control number 1210–0091, because of the similarity of subject matter between the two exemptions. No comments were received about the burden estimates and no substantial or material changes have been made in the grant of the exemption that would affect the burden estimates in the proposal. The approval for each of the ICRs included in the two exemptions will expire on April 30, 2006.

In order to grant an exemption pursuant to section 408(a) of the Act, the Department must, among other things, make a finding that the terms of the exemption are protective of the rights of participants and beneficiaries of a plan. To support making such a finding, the Department normally imposes certain conditions on fiduciaries and parties in interest that may make use of the exemption. The information collection provisions of the exemption are among these conditions. The information collection provisions are found in sections III(c), (e), (g), and

[1] Section 102 of Reorganization Plan No. 4 of 1978, 5 U.S.C. App. 1 (1996), generally transferred the authority of the Secretary of the Treasury to issue exemptions under section 4975(c)(2) of the Code ot the Secretary of Labor. For purposes of this exemption, references to specific provisions of Title I of the Act, unless otherwise specified, refer also to the corresponding provisions of the Code.

[2] PTCE 94–71, 59 FR 51216, October 7, 1994, as corrected, 59 FR 60837, November 28, 1994—Settlement Agreements Resulting From An Investigation, involving remedial settlements resulting from an investigation of an employee benefit plan conducted by the Department.

(h). These requirements are summarized as follows:

Written Agreement. The exemption requires that the terms of the settlement be specifically described in a written agreement or consent decree. In the exemption as granted, the Department has added that, with regard to transactions involving assets other than cash, the assets and their fair market value, including the date for such valuation, must be described in writing in the settlement agreement. Because a description and valuation of the assets involved in a settlement transaction are usually included in a settlement agreement, the requirement serves only as a clarification about assets that are not cash for the parties seeking to use the class exemption. In addition, because the Department believes that the ability to make changes with regard to a settlement allows more flexibility to the parties involved, it has also provided in the final exemption that certain adjustments, such as the right to amend the plan, are permissible if written into the agreement. These two new requirements are only operative for certain provisions and under certain conditions that may or may not be included in the settlement. Where appropriate, including the provisions in the agreement enables interested parties described in the exemption to verify that the conditions of the exemption have been met. However, neither requirement produces a measurable burden beyond that which would be considered usual business practice, and no additional burden has been accounted for in this ICR.

Acknowledgement by a Fiduciary. On a prospective basis, the exemption also requires that a fiduciary acting on behalf of the plan acknowledge in writing that it is a fiduciary with respect to the settlement of the litigation. Under the Act, a person that exercises ''any authority or control respecting disposition of [the plan's] assets,'' is considered a fiduciary. It is anticipated that the applicable plan fiduciary will incorporate this acknowledgement in the written agreement outlining the terms and conditions of its retention as a plan service provider, and already in existence, as part of usual and customary business practice. As such, a written acknowledgement is not expected to impose any measurable additional burden.

Recordkeeping. Prospectively, the exemption requires a plan to maintain for a period of six years the records necessary to enable certain persons to determine whether the conditions of the exemption had been met. The six-year recordkeeping requirement is consistent with the requirements in section 107 of the Act as well as general record-keeping requirements for tax information under the Code. As such, the Department has not accounted for a burden related to recordkeeping for this exemption.

The exemption may affect employee benefit plans, the participants and beneficiaries of those plans, and parties in interest to plans engaging in the specified transactions. It is not possible to estimate the number of respondents or frequency of response to the information collection requirements of the exemption due to the wide variety of litigation involving plans, parties to that litigation, and jurisdictions in which litigation occurs. However, the lack of an ascertainable number of settlements does not impact the hour or cost burden because no additional burden is associated with the information collection requirements of the exemption.

I. Discussion of Comments Received

The comments received by the Department were generally supportive of the issuance of a class exemption for the release of claims and extensions of credit in connection with litigation. However, commenters requested specific modifications to the proposal in the following areas:

A. Whether the settlement of litigation with a party in interest is a prohibited transaction. Several commenters argued that settling litigation is not a transaction, and, therefore, not prohibited under section 406 of the Act. Other commenters requested that the Department clarify that only a fiduciary, a participant or beneficiary, or the Secretary of Labor, may bring suit to enforce ERISA's fiduciary duties. These commenters asserted that, because the statute does not identify a plan as a party with standing to pursue ERISA litigation, an ERISA claim is not a plan asset and the release of such an asset, in exchange for consideration from a party in interest, would not be a prohibited sale or exchange of any property under section 406 of ERISA. Other commenters asserted that the settlement of litigation with a party in interest is a prohibited transaction and urged stricter conditions for the provision of retroactive relief because the Department's position on this issue was clearly articulated in its 1995 Opinion Letter, AO 95–26A (October 17, 1995).

As the Department noted in proposing this exemption, the fact that a transaction is subject to an administrative exemption is not dispositive of whether the transaction is, in fact, a prohibited transaction. Rather, the exemption is being granted in response to uncertainty expressed on the part of plan fiduciaries charged with the responsibility under ERISA for determining whether it is in the interests of a plan's participants and beneficiaries to enter into a settlement agreement with a party in interest. The comments have confirmed the Department's earlier conclusion that there was considerable uncertainty surrounding this issue. After considering all of the comments, the Department has determined that the exemption, as revised, appropriately balances the concerns of these commenters while allowing plan fiduciaries to properly carry out their responsibilities under ERISA.

In response to the comments that ERISA civil actions for breach of fiduciary duty may only be brought by participants, beneficiaries, fiduciaries, and the Secretary of Labor, the Department has modified the final class exemption to include the release of claims by both the plan and a plan fiduciary. As the Department noted in the preamble to the proposed exemption, many situations in which a plan settles litigation may not give rise to a prohibited transaction or may be covered by an existing statutory or administrative exemption. For example, correction of a prohibited transaction that complies with section 4975(f)(5) of the Code [3]; reimbursement of a plan without a release of the plan's claim; settlement with a service provider of a dispute related to the provision of services or incidental goods to the plan that is otherwise exempt under ERISA 408(b)(2) (*See*, Opinion Letter, AO 95–26A); settlements authorized by the Department pursuant to PTE 94–71 (59 FR 51216, October 7, 1994, as corrected, 59 FR 60837, November 28, 1994); and judicially approved settlements where the Labor Department or the Internal Revenue Service is a party pursuant to PTE 79–15 (44 FR 26979, May 8, 1979).

In addition, the Department notes that this class exemption would be available for settlement agreements relating to an employer's failure to timely remit participant contributions to a plan, including a collectively bargained multiemployer or multiple employer plan, to the extent the conditions contained in this final exemption are

[3] IRC Reg. sec. 141.4975–13 provides that for purposes of the excise taxes on prohibited transactions, the definition of the term ''correction'' under IRC Reg. sec. 53.4941(e)–1 (concerning excise taxes on self-dealing with foundations) is controlling.

met.[4] In this regard, the Department notes that the relief provided by this exemption is limited to the prohibited transactions that arise where a plan trustee and an employer enter into a settlement involving the employer's failure to timely forward participant contributions to the plan as required under ERISA. Thus, nothing in this class exemption should be construed as exempting any of the prohibited transactions described in section 406(a) or 406(b) of ERISA that arise solely in connection with an employer's failure to timely forward participant contributions to a plan.[5]

This exemption does not, however, apply to transactions described in PTE 76–1, A.I. (41 FR 12740, March 26, 1976, as corrected, 41 FR 16620, April 20, 1976) relating to delinquent employer contributions to a collectively bargained multiemployer or multiple employer plan. Finally, PTE 76–1, A.I. does not extend relief to those settlement arrangements that arise from the failure of an employer to timely forward participant contributions to a multiemployer or multiple employer plan.

Section 502(d)(1) of the Act provides that ''an employee benefit plan may sue or be sued under this title as an entity.'' This exemption covers settlement of any type of suit the plan has brought. However this exemption is not available for settlement of claims brought by a party in interest against a plan. This exemption does not cover a plan's payment of money or other things of value to a party in interest in exchange for the dropping of claims against the plan. As with exchanges made for the release of claims in favor of the plan, the Department's determination in this regard is not dispositive of whether such an exchange constitutes a prohibited transaction.

Finally, the Department notes that a settlement between a plan and a participant or beneficiary made solely to resolve claims against a plan for the recovery of benefits, by a participant or beneficiary, may not involve a prohibited transaction. If the plan makes payment to a participant who is a party in interest to settle a benefits dispute, such payment generally would be viewed by the Department as the payment of a plan benefit that would not trigger the need for an exemption. As the Supreme Court noted in *Lockheed Corp.* v. *Spink*, 517 U.S. 882, 892–893 (1996), the payment of benefits is not a prohibited transaction.

B. The plan must obtain advice from an attorney representing the plan that a genuine controversy exists. Several commenters were concerned that imposing this requirement on past settlements would effectively limit the availability of the exemption. These commenters asserted that, prior to publication of the Department's proposed exemption, many fiduciaries were unaware that the settlement of litigation might be considered a prohibited transaction by the Department. Even if an attorney was retained in connection with the litigation, it is unlikely that the attorney would have opined as to whether or not there was a genuine controversy. Other commenters argued that: the filing of a lawsuit should be sufficient to find the existence of a genuine controversy; and class action settlements should not have to meet this requirement. Another commenter suggested retaining the requirement for a genuine controversy, but without requiring an attorney's determination. This commenter also suggested that the attorney review be permitted, but not required, as a safe harbor in certain situations. He explained that fiduciaries might find it prudent and in the interests of participants and beneficiaries to settle a frivolous case for a *de minimus* amount, rather than incur the cost of litigation. In this situation, such fiduciaries should be able to meet the condition of the class exemption by demonstrating that they sought and obtained advice of counsel before settling the case.

Several commenters asserted that the genuine controversy condition was unnecessary as the concern raised by the Department, the possibility of a collusive settlement, was addressed by the condition that the settlement is not an arrangement to benefit a party in interest. Another commenter suggested that independent legal advice and a written agreement or consent decree should be mandatory for all retroactive relief because, even if the fiduciary was unaware of the prohibited transaction issue, a prudent fiduciary would have obtained such written documentation before entering into a settlement.

On the basis of these comments, the Department has decided to amend the genuine controversy condition. No finding of genuine controversy will be required where the case has been certified as a class action by the court. In addition, for transactions entered into prior to the publication of the final exemption, and the first 30 days thereafter, no attorney review will be required to determine whether the genuine controversy exists. On a prospective basis, attorney review will be required. In response to a question from one of the commenters, the Department confirms that the independent fiduciary's in-house attorneys, as well as its outside counsel, could provide the appropriate advice concerning the existence of a genuine controversy.

C. The decision-making fiduciary has no interest in any of the parties involved in the litigation that might affect the exercise of its best judgment as a fiduciary (independent fiduciary). Several commenters suggested that the Department eliminate the requirement for an independent fiduciary or, in the alternative, limit its application to prospective relief. Among the suggestions were: limit the requirement for an independent fiduciary to material claims where there are no alternative safeguards; and eliminate the independent fiduciary requirement where a judge reviews the fairness of a class action settlement. Other commenters expressed concern that the plan's directed trustee, even if not a defendant, should not be considered sufficiently independent to make decisions settling a case. They suggested that an entirely independent fiduciary be retained. Another commenter argued that relief in large cases should be conditioned upon the retention of an independent fiduciary with no prior relationship to the plan, or the defendants, and no future relationship with the plan for three years after the engagement.

Except as noted above in connection with the finding of genuine controversy, the Department does not believe that it would be appropriate to make a distinction between the requirements applicable to class action settlements and other settlements. However, in response to comments, the Department has decided to eliminate the requirement that the independent fiduciary ''negotiate'' the settlement. The Department realizes that many of the settlements to which this class exemption would apply are class action settlements. Where the plan is not a lead plaintiff, the plan fiduciary's role in negotiating the terms of the settlement may be limited. The Department recognizes, however, that even where negotiation does not take place between the plan and the defendant, a fiduciary will be compelled, consistent with ERISA's fiduciary responsibility provisions, to make a decision regarding

[4] The Department notes that the relief provided by this exemption would be available for settlements involving participant or employer contributions to a single employer plan or to a non-collectively bargained multiple employer plan.

[5] In this regard, the failure of an employer to timely remit contributions made to a plan by an employee of such employer violates ERISA sections 403(a), 403(c)(1), 404(a)(1)(A), 406(a)(1)(D), and 406(b)(1).

the settlement on behalf of the plan, even if that decision is merely to accept or reject a proposed settlement negotiated by other class members.

As modified, the final class exemption covers settlements authorized by a fiduciary that are reasonable, in light of the plan's likelihood of full recovery, the risks and costs of litigation, and the value of claims foregone. Such settlements must be no less favorable to the plan than comparable arm's-length terms and conditions that would have been agreed to by unrelated parties in similar circumstances. In addition, the transaction must not be part of an agreement, arrangement or understanding designed to benefit a party in interest. Thus, an independent fiduciary could satisfy the authorization requirements under the final exemption by deciding not to opt out of class action litigation if, after a review of the settlement, such fiduciary concludes that the chances of obtaining any further relief for the plan are not justified by the expense involved in pursuing such relief. Although the Department has determined to delete the requirement for negotiation as a specific condition of the class exemption, the Department notes that this modification does not diminish the fiduciary's responsibilities with respect to the settlement terms.

As noted above, several of the commenters expressed concern about the degree of independence of institutional fiduciaries, such as directed trustees, that may serve as the fiduciary contemplated by the class exemption. Without agreeing or disagreeing with this comment, the Department emphasizes that this class exemption does not provide relief from section 406(b) of the Act. In addition, the fiduciary's decisions in authorizing a settlement are subject to the fiduciary responsibility provisions of the Act.

D. Plans must select an independent fiduciary. Several commenters expressed concern about the additional cost of hiring independent fiduciaries in connection with settlements. The Department believes that plans often will not need to retain fiduciaries specifically to comply with this exemption. In most cases, the plan will be able to use a current fiduciary who is not a party to the action and who is not so closely allied with a party (other than the plan) as to create a conflict of interest. As with any other expense, the Department expects that fiduciaries will engage in prudent cost/benefit analysis to select the appropriate independent fiduciary in each case. In some cases, the cost of the independent fiduciary may be included in the damages claimed by the plan and may be reimbursed by the defendant in settling the litigation.

One of the commenters suggested that to avoid duplication, the independent fiduciary should be permitted to rely on the opinion of plaintiffs' class counsel or experts hired to assist class counsel. The Department agrees that the fiduciary should not spend plan resources unnecessarily. Whether and to what extent a fiduciary should rely on a particular attorney or expert hired by one of the other parties are decisions that the fiduciary must make in accordance with its fiduciary responsibilities under ERISA.

In this regard, the Department notes that on occasion the independent fiduciary may wish to retain outside experts to assist the fiduciary in determining whether or not to settle litigation. The following are some of the factors that may assist the fiduciary in its determination: the size of the claim, the expertise of the fiduciary, and the subject matter of the litigation.

Several of the commenters asked the Department to clarify that the mere fact that a party in interest pays for an attorney, an independent fiduciary, or other expert hired by the plan, does not mean that these professionals are not independent for purposes of the exemption. The Department agrees with this assertion, assuming that the professional being paid by the party in interest understands that the plan is their client, not the party paying their bill. In addition, the amount of compensation paid to the professional by the party in interest constitutes no more than a small percentage of such professional's annual gross income.

E. What is the role of the independent fiduciary where there is judicial approval of a settlement? Several commenters recommended that judicial approval of a settlement should eliminate the need for an independent fiduciary. One of the commenters suggested that where the settlement is judicially approved, relief from section 406(b) of the Act should be available under the exemption for those fiduciaries that were defendants in the litigation. The Department has determined not to adopt these suggestions. The court, in reaching its conclusion that the settlement is fair, must balance the interests of all the litigants. ERISA, on the other hand, requires that a fiduciary make its decisions with an ''eye single to the interests of the participants and beneficiaries.'' *Donovan* v. *Bierwirth,* 680 F.2d 263, 271 (2d Cir. 1982), cert. denied, 459 U.S. 1069 (1982). In response to the request for relief from section 406(b), the Department does not believe that a sufficient showing has been made that such relief would be appropriate under the circumstances.

F. Should there be special rules for settling class action litigation? Several of the commenters explained that, with respect to certain types of class actions, class members do not have the option of opting out of the class—all are bound by the decision. The commenters explained that ERISA class actions are often non-opt out cases. According to the commenters, this means that where class action litigation is brought by the participants, the plan fiduciary may, without taking any action, be bound by the class action settlement. In light of this, the commenters asked how such a fiduciary could cause a prohibited transaction where it took no action and yet was bound by the settlement. The Department does not regard this exemption proceeding to be the appropriate setting for resolving questions concerning what types of settlement are more or less likely to be prohibited transactions.

The Department notes, however, that the fiduciary is unlikely to remain uninvolved in the settlement of an ERISA lawsuit initiated by participants for two reasons. First, the fiduciary will, in all likelihood, be named as a party to the lawsuit and the court will almost certainly require the plan fiduciary's input on the settlement. Alternatively, the party in interest likely will seek the involvement of the fiduciary because the party in interest (disqualified person) may need to take advantage of the relief provided by the class exemption in order to avoid the possible imposition of excise taxes under section 4975 of the Code. Under the Code, such excise taxes are paid by the disqualified person who participates in the prohibited transaction, not the fiduciary who caused the plan to engage in the transaction.

In order to meet the conditions of the class exemption, the fiduciary faced with a non-opt out class action must take such actions as are appropriate under the particular circumstances. For example, before such a settlement is imposed on a non-opt out class, generally there is an opportunity to object to its terms. If the fiduciary does not believe that the proposed terms and conditions of the settlement are as favorable to the plan as comparable arm's-length terms and conditions that would have been agreed to by unrelated parties under similar circumstances, it should object to the settlement.

In securities fraud class action cases, there is often an option to opt out of the class. Where the plan or the plan

trustee, as the holder of record of the securities, is a class member, whatever action or inaction that fiduciary determines to undertake has consequences for the plan. If the fiduciary takes no action, and the case is settled for far less than the full value of the plan's losses, the burden will be on the fiduciary to justify its inaction. The fiduciary responsible for authorizing settlement of class action claims must decide, not only whether or not to opt out of the class action, but also whether to protest the proposed settlement during the fairness hearing.[6]

G. Only cash may be received in exchange for the release, unless the transaction at issue is being rescinded. The commenters were universal in their objection to this condition. They pointed out that frequently, in cases involving investment in employer securities, the settlement consists of additional employer securities. In addition, settlements with plan sponsors often include nonmonetary relief, such as a promise of future contributions and plan amendments improving participants' rights, for example, the right to diversify their investments.

In response to these comments, the Department notes that the conditions for retroactive relief do not specify the type of the consideration that may be provided in exchange for the release. On a prospective basis, the Department has decided to modify the final exemption to permit assets other than cash to be provided in exchange for the plan's or the plan fiduciary's release of a claim. As modified, the final exemption permits contributions of qualifying employer securities, or other marketable securities, in certain instances. Any assets contributed to the plan, in connection with a settlement, must consist of securities that can be objectively valued to determine fair market value, in accordance with Section 5 of the Voluntary Fiduciary Correction (VFC) Program (67 FR 15062, March 28, 2002). The final exemption has also been modified to provide that plan amendments, additional employee benefits, and the promise of future contributions may be included as part of a settlement agreement covered by this exemption.

H. When is a settlement reasonable? One commenter urged the Department to apply this condition to all transactions and to include the costs of litigation among the factors to be considered in determining whether a settlement is reasonable. Another commenter asked to include the value of claims foregone. The Department has adopted these suggestions. The final exemption requires that the settlement must be reasonable in light of the plan's likelihood of full recovery, the risks and costs of litigation, and the value of claims foregone. How these factors are weighed by fiduciaries will differ, depending on the type of case, but will always involve a prudent decision-making process, given the facts and circumstances of the particular situation.

I. Should an interest rate be specified? Most of the commenters urged the Department to eliminate the requirement that a reasonable interest rate be charged for an extension of credit in connection with a settlement covered by the exemption. The commenters explained that often a settlement requires a payment of the promised sum over several years, without specifying an interest rate. In response to these comments, the Department has modified this condition to delete the reference to interest in connection with the loan or extension of credit. As modified, any extensions of credit must be made on terms that are reasonable. Although the final exemption provides more flexibility, fiduciaries that agree to an extension of credit with a party in interest nonetheless must consider that party's creditworthiness and the time value of money in evaluating the settlement.

As noted above, the settlement of litigation with a plan sponsor often involves the promise of future contributions. Another commenter requested that the Department clarify that the promise of future contributions is not loan or other extension of credit. The Department agrees with the commenter.

The Department encountered a case where the trustees had agreed to accept payments over time in order to collect amounts misappropriated by a party in interest. In this case, the trustees extended credit to the party in interest, but did not release their cause of action against him. In such a case, the class exemption will apply if the extension of credit is being made in connection with a settlement and both the settlement and the extension of credit meet all of the conditions of this exemption.

Several commenters urged the Department to require that extensions of credit be secured by property or a letter of credit. Although the Department has decided not to adopt this suggestion as a condition of the final exemption, the Department encourages fiduciaries to seek security for an extension of credit, wherever feasible, to protect the plan against the risk of default.

J. Certain applicants request that the scope of AO 95–26A (October 17, 1995) be extended. In AO 95–26A, the Department opined that settlement of litigation with a service provider may be covered by the statutory exemption for service providers provided under section 408(b)(2) of the Act. Several commenters asked whether the same rationale extended to the settlement of cases where the transaction at issue in the litigation is of the type addressed by a statutory or administrative exemption. The Department notes that the issues raised by the commenters, with respect to the scope of AO 95–26A, are beyond the scope of this exemption proceeding.

K. Who bears the burden of proof? Several commenters expressed concern that, if the retroactive conditions of the exemption are too subjective or difficult to meet, fiduciaries who acted in good faith in settling cases, particularly complex securities fraud cases, may be subject to litigation. According to the commenters, most practitioners were unaware of the Department's position that settling litigation with a party in interest might result in a prohibited transaction until the Department published the proposal for this class exemption. These commenters argued that, without a broad retroactive exemption, frivolous litigation may ensue.

Other commenters asserted that whether or not the fiduciaries were aware of potential prohibited transactions, these fiduciaries knew they were making decisions involving plan assets. If they acted prudently and in the interests of participants and

[6] For example, in *Great Neck Capital Appreciation Investment Partnership* v. *PriceWaterhouseCoopers,* In re Harnischfeger Industries, Inc. Securities Litigation, 212 F.R.D. 400 (E.D. Wisc. 2002), the original securities law class action settlement proposal included release of ERISA claims against the fiduciaries of the Harnischfeger employee benefit plans, even though the lawsuit had not alleged ERISA claims. At the fairness hearing, a participant protested that the participants' ERISA claims might be extinguished if this release was approved as part of the settlement. After considering the parties positions, the judge, during a conference call, ''advised the parties that [he] was inclined to view the proposed settlement as unfair if its effect would be to extinguish the Plan participants' ERISA claims without compensation and that it also appeared to be unfair to require Plan participants to give up their right to participate in the settlement as a condition of asserting ERISA claims.'' 212 F.R.D. at 406. The securities law parties took the judge's hint and voluntarily agreed to exclude the ERISA claims from the release. In re IKON Office Solutions, Inc. Securities Litigation, 194 F.R.D. 166 (E.D.Pa. 2000), on the other hand, involved a securities law release that arguably released at least some of the ERISA claims and participants protested this at the fairness hearing. The court held that it would be premature, in the context of a settlement, for the court to address such issues—participants could either opt out and not be bound by the settlement, or take their chances pursuing what was left of their ERISA claims after receiving their portion of the securities class action settlement.

beneficiaries in settling the litigation with the party in interest, these fiduciaries should have no trouble meeting the retroactive requirements of the exemption. These commenters argued that, given the Department's guidance on this issue in 1995, it is appropriate to shift the burden of proving substantive and procedural prudence from the person challenging the settlement to the fiduciary seeking the protection of the exemption.

In light of these comments, the Department confirms that the party seeking to take advantage of any administrative exemption granted by the Department has the burden of proving that it met each condition of the exemption. Nonetheless, the Department has been persuaded that many practitioners were unaware of the prohibited transaction issues involved in settlements. The Department is also aware that some attorneys may have advised their clients that the settlement of litigation with a party in interest is not the type of transaction intended to be covered by section 406 of the Act. After considering these comments, the Department believes that it is appropriate to modify the retroactive relief under the final exemption. Accordingly, for settlements entered into on or before 30 days after the date of publication of the final exemption, the determination that there was a genuine controversy need not have been made by an attorney.

L. Should notice be required? Several commenters urged the Department to require notice to all participants and beneficiaries in connection with the settlement of litigation. One commenter pointed out that the Department requires notice in connection with PTE 94–71 (59 FR 51216, October 7, 1994, as corrected, 59 FR 60837, November 28, 1994) (settlement agreements between the U.S. Department of Labor and plans) where the Department is a party to the settlement. This commenter argued that without the involvement of the Department, notice is even more important to the participants and beneficiaries because their rights to pursue their own ERISA litigation could be compromised or waived entirely by the plan fiduciary. The commenter recommended that notice to participants of the nature of the allegations leading to the settlement and the terms of the proposed settlement should be required. This commenter also urged that all settlements should take the form of a proposed consent decree filed after, or contemporaneous with, the Complaint. In addition, the analytical basis for the settlement should be open to inspection by participants for a stated period of time. Another commenter explained that, in his experience, participants are not aware of litigation, or at least the plan's involvement, until after the settlement is final. Other commenters strongly oppose notice. These commenters asserted that such an undertaking could be very costly and disruptive, especially for minor litigation.

The Department has determined not to add a notice requirement as a condition of this class exemption. Requiring notice at the point where litigation is about to be settled could result in unnecessary delays and additional costs. The Department believes that the interests of the participants and beneficiaries will be sufficiently protected by the conditions of this class exemption, especially the requirement that the settlement is authorized by a fiduciary who is independent of the parties involved in the litigation.

M. Discussion of other comments. One of the commenters requested the Department's concurrence that, if ERISA claims are not covered by the release given by the plan or the plan fiduciary in settlement of litigation, the fiduciary need not obtain additional consideration to account for such claims. The Department agrees with this statement.

One commenter urged the Department to opine that, where a plan fiduciary causes a plan to release all the plan's non-ERISA claims arising out of a transaction, the fiduciary does not automatically release the fiduciary's own claims for breach of fiduciary duty arising out of the same transaction. The commenter explained that the proposed exemption did not distinguish between claims brought by the plan, *i.e.*, with the plan itself as a named party, and claims brought on behalf of the plan by a fiduciary. ERISA § 502(d)(1), 29 U.S.C. 1132(d)(1), provides that an employee benefit plan may sue and be sued as an entity. Claims for violations of title I of ERISA, however, may be brought by a fiduciary, participant or beneficiary of the plan or by the Secretary of Labor. ERISA §§ 502(a)(2), 502(a)(3), 502(a)(4), 502(a)(5), and 502(e)(1), 29 U.S.C. 1132(a)(2), 1132(a)(3), 1132(a)(4), 1132(a)(5) and 1132(e)(1). Some courts have concluded that plans may bring actions under other laws, but may not bring an action for a fiduciary breach under title I of ERISA. *E.g., Pressroom Unions-Printers League Income Security Fund* v. *Continental Assurance Co.*, 700 F.2d 889, 893 (2nd Cir. 1983). Other courts have not adopted this distinction. *E.g., Saramar Aluminum Co.* v. *Pension Plan for Employees of the Aluminum Indus. and Allied Indus.*, 782 F.2d 577, 581 (6th Cir. 1986). The commenter believes that a failure to distinguish between claims that a plan can make in its own name and those that must be made by a plan fiduciary, for example, could cause courts to conclude that releasing a plan's non-ERISA claims automatically releases a plan fiduciary's, or participant's or beneficiary's ERISA claims on behalf of the plan.

The Department amended the proposed exemption to clarify that it applies to releases by the plan or by a plan fiduciary. The issue of how a release of claims by a plan or plan fiduciary may affect ERISA claims that could otherwise be brought by a fiduciary, participant or beneficiary is beyond the scope of this exemption proceeding. In the Department's view, a fiduciary should understand, in advance of signing, the legal effect that a settlement agreement may have on all claims that might be brought by or on behalf of the plan or its participants and beneficiaries. Plan fiduciaries may need to obtain legal advice on the scope of claims affected by a proposed settlement agreement. The Department notes that it has long held the view that a fiduciary's release of ERISA claims does not bind the Secretary.

It is not uncommon for the same transactions to give rise to both ERISA and securities fraud claims. The plan, and by extension, the participants and beneficiaries of the plan, are entitled to the same recovery as other shareholders in the securities fraud settlement. However, the participants and beneficiaries may have another avenue of recovery not available to other shareholders. They are authorized, under ERISA, along with the plan fiduciary and the Secretary of Labor, to bring suit to make the plan whole for all losses caused by a breach of fiduciary duty. As noted above, the Department recognizes that, in a number of securities fraud class action settlements, the participants and/or plan fiduciaries have successfully objected to the original release and were able to modify the terms of the release to permit the plan to receive its share of the securities fraud settlement without releasing its ERISA claims against the parties in interest. In other instances, fiduciaries have successfully negotiated additional relief for the plan beyond that provided to shareholders who did not have ERISA claims against the defendants. The Department notes that plan fiduciaries should consider whether additional relief may be available for the ERISA claims before agreeing to a broad release.

In conclusion, the Department encourages participants, beneficiaries, fiduciaries, parties in interest and other interested persons to take advantage of the wide range of compliance assistance offered by the Department. Those with questions about their rights and responsibilities in particular situations should look first to our web site: *http://www.dol.gov/EBSA/*. You may also call, toll-free, the Employee & Employer Hotline 1–866–444–EBSA (3272). To discuss substantive ERISA issues in connection with particular cases, please contact your local EBSA field office. The EBSA web site mentioned above includes a state-by-state list of phone numbers and addresses for these offices. Click on ''About EBSA/EBSA Offices.''

II. Description of the Exemption

The exemption provides retroactive and prospective relief from the restrictions of section 406(a)(1)(A), (B) and (D) of the Act and from the taxes imposed by section 4975(a) and (b) of the Code by reason of section 4975(c)(1)(A), (B) and (D) of the Code, for the following transactions, effective January 1, 1975:

(1) The release by the plan or by a plan fiduciary of a legal or equitable claim against a party in interest in exchange for consideration, given by, or on behalf of, a party in interest to the plan in partial or complete settlement of the plan's or the fiduciary's claim; and

(2) An extension of credit by a plan to a party in interest in connection with a settlement whereby the party in interest agrees to repay, over time, an amount owed to the plan in settlement of a legal or equitable claim by the plan or a plan fiduciary against the party in interest.

A. Conditions Applicable to All Transactions

The exemption is conditioned upon the existence of a genuine controversy involving the plan unless the case has been certified as a class action by the court. The Department believes that this condition is necessary to prevent the plan and parties in interest from engaging in a sham transaction purporting to fall within this class exemption, thus shielding a transaction, such as an extension of credit or other transaction with a party in interest, that would otherwise be prohibited.

The fiduciary that authorizes the settlement must have no relationship to, or interest in, any of the other parties involved in the litigation, other than the plan, that might affect its best judgment as a fiduciary. The Department intends a flexible standard for fiduciary independence, recognizing that the exemption will encompass a wide range of situations, both in terms of the type of litigation and the cost of pursuing such litigation. For example, in some instances where there are complex issues and significant amounts of money involved, it may be appropriate to hire an independent fiduciary having no prior relationship to the plan, its trustee, any parties in interest, or any other parties to the litigation. In other instances, the plan's current trustee or investment manager, assuming that fiduciary's conduct is not at issue, may be an appropriate party to make the decision on behalf of the plan as to whether to settle the litigation.

In response to comments received by the Department regarding the settlement of class action litigation in which the ability to negotiate may be limited, the Department eliminated the requirement that the settlement be ''negotiated'' by the fiduciary. In lieu of this requirement, the exemption provides that the fiduciary may authorize a settlement if its terms and conditions are no less favorable to the plan than comparable arm's-length terms and conditions that would have been agreed to by unrelated parties under similar circumstances.

The exemption is conditioned upon the settlement being reasonable given the likelihood of full recovery, the costs and risks of litigation, and the value of claims foregone. The claims foregone may include additional causes of action not available to the other plaintiffs in the same case. For example, where shareholders have brought a class action securities fraud case against the Company and its officers, the Company's employee benefit plan or the trustee, as the holder of record, may be named as a member of the class because it holds employer securities. The plan or trustee may also have ERISA claims against the Company and some or all of its officers, as well as against other parties. Before entering into a settlement with any defendant, the plan fiduciary should consider the value of these additional claims against that defendant. The plan fiduciaries may also be able to pursue claims against defendants not named in the securities fraud case, including knowing participants in the breach. Under certain circumstances, the plan will have additional sources of recovery, including fiduciary liability insurance, the plan's fidelity bond, and the personal assets of the defendants, including their own employee benefit plan accounts.[7]

The exemption also provides that the settlement must not be part of an agreement, arrangement, or understanding designed to benefit a party in interest. The intent of this condition is not to deny direct benefits to other parties to a transaction but, rather, to exclude transactions that are part of a broader overall agreement, arrangement or understanding designed to benefit parties in interest.

Where a settlement includes an extension of credit by a plan to a party in interest for purposes of repaying an amount owed in settlement of litigation, the exemption requires that the credit terms be reasonable. Fiduciaries must consider the creditworthiness of the party in interest and the time value of money in evaluating extensions of credit to settle litigation. The settling fiduciary should also consider security for such loans, such as a third party guarantee or letter of credit, to protect against default.

The Department has added a new condition which clarifies that this class exemption does not cover those transactions that are described in PTE 76–1, A.I. (41 FR 12740, March 26, 1976, as corrected, 41 FR 16620, April 20, 1976) (relating to delinquent employer contributions to multiemployer and multiple employer collectively bargained plans).

Finally, in response to a question received during the comment period, the Department has defined the terms ''employee benefit plan'' and ''plan'' to include an employee benefit plan described in section 3(3) of ERISA and/or plans as defined in section 4975(e)(1) of the Code.

B. Conditions Applicable to Prospective Transactions

On a prospective basis, the existence of a genuine controversy must be determined by an attorney retained to advise the plan unless the case has been certified as a class action by the court. That attorney must be independent of the other parties to the litigation. All terms of the settlement must be specifically described in a written agreement or consent decree and the fiduciary authorizing the settlement must acknowledge its fiduciary status in writing.

The exemption provides that in certain instances assets, other than cash,

[7] Section 206(d)(4) of the Act permits a plan to offset the benefits of a participant under an employee pension plan against an amount that the participant is ordered or required to pay, if the order or requirement to pay arises under a judgment of conviction of a crime involving the plan, a civil judgment, including a consent order or decree, entered into by a court, or where there is a settlement agreement between the participant and the Secretary of Labor or the PBGC in connection with a violation of Part IV of ERISA.

may be received by the plan from a party in interest. Assets may be received by the plan if necessary to rescind transactions. The conditions for retroactive relief do not specify the nature of the consideration exchanged for the release. On a prospective basis, securities with a generally recognized market may be exchanged for the release, provided that such securities can be objectively valued. In addition, the contribution of additional qualifying employer securities is permitted in settlement of the dispute involving such qualifying employer securities. Where assets, other than cash, are provided to the plan in exchange for a release, such assets must be specifically described in the written settlement agreement and valued at their fair market value as determined in accordance with section 5 of the Voluntary Fiduciary Correction (VFC) Program (67 FR 15062 March 28, 2002). The final exemption also provides that the settlement may also include a written agreement to: make future contributions, adopt amendments to the plan, or provide additional employee benefits.

General Information

The attention of interested persons is directed to the following:

(1) The fact that a transaction is the subject of an exemption under section 408(a) of the Act and section 4975(c)(2) of the Code does not relieve a fiduciary or other party in interest or disqualified person from certain other provisions of the Act and the Code, including any prohibited transaction provisions to which the exemption does not apply and the general fiduciary responsibility provisions of section 404 of the Act which require, among other things, that a fiduciary discharge his duties with respect to the plan solely in the interests of the participants and beneficiaries of the plan and in a prudent fashion in accordance with section 404(a)(1)(B) of the Act; nor does it affect the requirement of section 401(a) of the Code that the plan must operate for the exclusive benefit of the employees of the employer maintaining the plan and their beneficiaries;

(2) In accordance with section 408(a) of the Act and section 4975(c)(2) of the Code, and based upon the entire record, the Department finds that the exemption is administratively feasible, in the interests of the plans and their participants and beneficiaries, and protective of the rights of participants and beneficiaries of such plans;

(3) The exemption is applicable to a particular transaction only if the conditions specified in the class exemption are met; and

(4) The exemption is supplemental to, and not in derogation of, any other provisions of the Code and the Act, including statutory or administrative exemptions and transitional rules. Furthermore, the fact that a transaction is subject to an administrative or statutory exemption is not dispositive of whether the transaction is in fact a prohibited transaction.

Exemption

Accordingly, the following exemption is granted under the authority of section 408(a) of the Act and section 4975(c)(2) of the Code, and in accordance with the procedures set forth in 29 CFR part 2570, subpart B (55 FR 32836, 32847, August 10, 1990.)

Section I. Covered Transactions

Effective January 1, 1975, the restrictions of section 406(a)(1)(A), (B) and (D) of the Act, and the taxes imposed by section 4975(a) and (b) of the Code, by reason of section 4975(c)(1)(A), (B) and (D) of the Code, shall not apply to the following transactions, if the relevant conditions set forth in sections II through III below are met:

(a) The release by the plan or a plan fiduciary, of a legal or equitable claim against a party in interest in exchange for consideration, given by, or on behalf of, a party in interest to the plan in partial or complete settlement of the plan's or the fiduciary's claim.

(b) An extension of credit by a plan to a party in interest in connection with a settlement whereby the party in interest agrees to repay, over time, an amount owed to the plan in settlement of a legal or equitable claim by the plan or a plan fiduciary against the party in interest.

Section II. Conditions Applicable to All Transactions

(a) There is a genuine controversy involving the plan. A genuine controversy will be deemed to exist where the court has certified the case as a class-action.

(b) The fiduciary that authorizes the settlement has no relationship to, or interest in, any of the parties involved in the litigation, other than the plan, that might affect the exercise of such person's best judgment as a fiduciary.

(c) The settlement is reasonable in light of the plan's likelihood of full recovery, the risks and costs of litigation, and the value of claims foregone.

(d) The terms and conditions of the transaction are no less favorable to the plan than comparable arms-length terms and conditions that would have been agreed to by unrelated parties under similar circumstances.

(e) The transaction is not part of an agreement, arrangement, or understanding designed to benefit a party in interest.

(f) Any extension of credit by the plan to a party in interest in connection with the settlement of a legal or equitable claim against the party in interest is on terms that are reasonable, taking into consideration the creditworthiness of the party in interest and the time value of money.

(g) The transaction is not described in Prohibited Transaction Exemption (PTE) 76–1, A.I. (41 FR 12740, March 26, 1976, as corrected, 41 FR 16620, April 20, 1976) (relating to delinquent employer contributions to multiemployer and multiple employer collectively bargained plans).

Section III. Prospective Conditions

In addition to the conditions described in section II, the following conditions apply to the transactions described in section I (a) and (b) entered into after January 30, 2004:

(a) Where the litigation has not been certified as a class action by the court, an attorney or attorneys retained to advise the plan on the claim, and having no relationship to any of the parties, other than the plan, determines that there is a genuine controversy involving the plan.

(b) All terms of the settlement are specifically described in a written settlement agreement or consent decree.

(c) Assets other than cash may be received by the plan from a party in interest in connection with a settlement only if:

(1) necessary to rescind a transaction that is the subject of the litigation; or

(2) such assets are securities for which there is a generally recognized market, as defined in ERISA section 3(18)(A), and which can be objectively valued. Notwithstanding the foregoing, a settlement will not fail to meet the requirements of this paragraph solely because it includes the contribution of additional qualifying employer securities in settlement of a dispute involving such qualifying employer securities.

(d) To the extent assets, other than cash, are received by the plan in exchange for the release of the plan's or the plan fiduciary's claims, such assets must be specifically described in the written settlement agreement and valued at their fair market value, as determined in accordance with section 5 of the Voluntary Fiduciary Correction (VFC) Program, 67 FR 15062 (March 28, 2002). The methodology for determining

fair market value, including the appropriate date for such determination, must be set forth in the written settlement agreement.

(e) Nothing in section III (c) shall be construed to preclude the exemption from applying to a settlement that includes a written agreement to: (1) Make future contributions; (2) adopt amendments to the plan; or (3) provide additional employee benefits.

(f) The fiduciary acting on behalf of the plan has acknowledged in writing that it is a fiduciary with respect to the settlement of the litigation on behalf the plan.

(g) The plan fiduciary maintains or causes to be maintained for a period of six years the records necessary to enable the persons described below in paragraph (h) to determine whether the conditions of this exemption have been met, including documents evidencing the steps taken to satisfy sections II (b), such as correspondence with attorneys or experts consulted in order to evaluate the plan's claims, except that:

(1) if the records necessary to enable the persons described in paragraph (h) to determine whether the conditions of the exemption have been met are lost or destroyed, due to circumstances beyond the control of the plan fiduciary, then no prohibited transaction will be considered to have occurred solely on the basis of the unavailability of those records; and

(2) No party in interest, other than the plan fiduciary responsible for record-keeping, shall be subject to the civil penalty that may be assessed under section 502(i) of the Act or to the taxes imposed by section 4975(a) and (b) of the Code if the records are not maintained or are not available for examination as required by paragraph (h) below;

(h)(1) Except as provided below in paragraph (h)(2) and notwithstanding any provisions of section 504(a)(2) and (b) of the Act, the records referred to in paragraph (g) are unconditionally available at their customary location for examination during normal business hours by—

(A) any duly authorized employee or representative of the Department or the Internal Revenue Service;

(B) any fiduciary of the plan or any duly authorized employee or representative of such fiduciary;

(C) any contributing employer and any employee organization whose members are covered by the plan, or any authorized employee or representative of these entities; or

(D) any participant or beneficiary of the plan or the duly authorized employee or representative of such participant or beneficiary.

(2) None of the persons described in paragraph (h)(1)(B)–(D) shall be authorized to examine trade secrets or commercial or financial information which is privileged or confidential.

Section III. Definition

For purposes of this exemption, the terms ''employee benefit plan'' and ''plan'' refer to an employee benefit plan described in section 3(3) of ERISA and/or a plan described in section 4975(e)(1) of the Code.

Signed at Washington, DC this 24th of December, 2003.

Ivan L. Strasfeld,

Director, Office of Exemption Determinations, Employee Benefits Security Administration, U.S. Department of Labor.

[FR Doc. 03–32191 Filed 12–30–03; 8:45 am]

BILLING CODE 4520–29–P

DEPARTMENT OF LABOR

Employment and Training Administration

[TA–W–53,551]

Allegheny Ludlum Corporation, Brackenridge Works, Brackenridge, PA

Notice of Termination of Investigation Pursuant to Section 221 of the Trade Act of 1974, as amended, an investigation was initiated on November 17, 2003 in response to a petition filed by a company official on behalf of workers at Allegheny Ludlum Corporation, Brackenridge Works, Brackenridge, Pennsylvania.

The petitioning group of workers is covered by an earlier petition instituted on November 14, 2003 (TA–W–53,538) that is the subject of an ongoing investigation for which a determination has not yet been issued. Further investigation in this case would duplicate efforts and serve no purpose; therefore the investigation under this petition has been terminated.

Signed at Washington, DC this 19th day of November, 2003.

Linda G. Poole,

Certifying Officer, Division of Trade Adjustment Assistance.

[FR Doc. 03–31982 Filed 12–30–03; 8:45 am]

BILLING CODE 4510–30–P

DEPARTMENT OF LABOR

Employment and Training Administration

[TA–W–42,222 and TA–W–42,222A]

EHV–Weidmann Industries, Inc., a Subsidiary of Wicor Americas, St. Johnsbury, Vermont; and Weidmann Systems International, Inc., St. Johnsbury, Vermont; Amended Certification Regarding Eligibility To Apply for Worker Adjustment Assistance

In accordance with section 223 of the Trade Act of 1974 (19 U.S.C. 2273) the Department of Labor issued a Notice of Certification Regarding Eligibility to Apply for Worker Adjustment Assistance on November 25, 2002, applicable to workers of EHV–Weidmann Industries, Inc., a subsidiary of Wicor Americas, St. Johnsbury, Vermont. The notice was published in the **Federal Register** on December 23, 2002 (67 FR 78258).

At the request of the company, the Department reviewed the certification for workers of the subject firm. The workers are engaged in the production of electrical insulation boards and components.

Information from the company shows that worker separations occurred at Weidmann Systems International, St. Johnsbury, Vermont a sister company of the subject firm. Workers at Weidmann Systems International, Inc. provide sales and customer services supporting the production of electrical insulation boards and components at the subject firm.

Based on these findings, the Department is amending the certification to include workers of Weidmann Systems International, Inc., St. Johnsbury, Vermont.

The intent of the Department's certification is to include all workers of EHV–Weidmann Industries, Inc., a subsidiary of Wicor Americas, St. Johnsbury, Vermont, who were adversely affected by increased imports.

The amended notice applicable to TA–W–42,222 is hereby issued as follows:

''All workers of EHV–Weidmann Industries, Inc., a subsidiary of Wicor Americas, St. Johnsbury, Vermont (TA–W–42,222) and Weidmann Systems International, Inc. St. Johnsbury, Vermont (TA–W–42,222A), who became totally or partially separated from employment on or after September 17, 2001, through November 25, 2004, are eligible to apply for adjustment assistance under Section 223 of the Trade Act of 1974.''

Signed at Washington, DC this 25th day of November 2003.

Elliott S. Kushner,

Certifying Officer, Division, of Trade Adjustment Assistance.

[FR Doc. 03–31991 Filed 12–30–03; 8:45 am]

BILLING CODE 4510–30–P

DEPARTMENT OF LABOR

Employment and Training Administration

[TA–W–53,501]

Fishing Vessel (F/V) Exception, Homer, Alaska; Notice of Termination of Investigation

Pursuant to Section 221 of the Trade Act of 1974, as amended, an investigation was initiated on November 12, 2003 in response to a petition filed by a company official on behalf of workers of F/V Exception, Homer, Alaska.

The petition regarding the investigation has been deemed invalid. In order to establish a valid worker group, there must be at least three full-time workers employed at some point during the period under investigation. Workers of the group subject to this investigation did not meet this threshold level of employment. Consequently, the investigation has been terminated.

Signed at Washington, DC this 17th day of November 2003.

Linda G. Poole,

Certifying Officer, Division of Trade Adjustment Assistance.

[FR Doc. 03–31983 Filed 12–30–03; 8:45 am]

BILLING CODE 4510–30–P

DEPARTMENT OF LABOR

Employment and Training Administration

[TA–W–53,406]

Fishing Vessel (F/V) Patricia Diann, Cordova, Alaska; Notice of Termination of Investigation

Pursuant to section 221 of the Trade Act of 1974, as amended, an investigation was initiated on November 3, 2003, in response to a petition filed by a company official on behalf of workers of Fishing Vessel (F/V) Patricia Diann, Cordova, Alaska.

The investigation revealed that the subject firm did not separate or threaten to separate a significant number or proportion of workers as required by section 222 of the Trade Act of 1974. Significant number or proportion of the workers means that at least three workers in a firm with a workforce of fewer than 50 workers would have to be affected. Separations by the subject firm did not meet this threshold level; consequently the investigation has been terminated.

Signed at Washington, DC this 18th day of November 2003.

Linda G. Poole,

Certifying Officer, Division of Trade Adjustment Assistance.

[FR Doc. 03–31985 Filed 12–30–03; 8:45 am]

BILLING CODE 4510–30–P

DEPARTMENT OF LABOR

Employment and Training Administration

[TA–W–50,941A]

Harting, Inc. of North America, Elgin, Illinois; Including an Employee of Harting, Inc. of North America, Located in California; Amended Certification Regarding Eligibility To Apply for Worker Adjustment Assistance

In accordance with section 223 of the Trade Act of 1974 (19 U.S.C. 2273) the Department of Labor issued a Certification of Eligibility to Apply for Worker Adjustment Assistance on March 5, 2003, applicable to workers of Harting, Inc. of North America, Elgin, Illinois. The notice was published in the **Federal Register** on March 19, 2003 (68 FR 13332).

At the request of the State agency, the Department reviewed the certification for workers of the subject firm. New information shows that a worker was separated involving an employee of the Elgin, Illinois facility of Harting, Inc. of North America located in California. This employee provided technical support services for the production of cable assemblies at an affiliated facility Harting Manufacturing, Inc., Elgin, Illinois.

Based on these findings, the Department is amending this certification to include an employee of the Elgin, Illinois facility of Harting, Inc. of North American, located in California.

The intent of the Department's certification is to include all workers of Harting, Inc. of North America who were adversely affected by increased imports.

The amended notice applicable to TA–W–50,941A is hereby issued as follows:

• ''All workers of Harting, Inc. of North America, Elgin, Illinois (TA–W–50,941A), including employees of Harting, Inc. of North America, Elgin, Illinois, located in California (TA–W–50,834B), who became totally or partially separated from employment on or after February 14, 2002, through March 5, 2005, are eligible to apply for adjustment assistance under section 223 of the Trade Act of 1974.''

Signed at Washington, DC this 21st day of November 2003.

Richard Church,

Certifying Officer, Division of Trade Adjustment Assistance.

[FR Doc. 03–31990 Filed 12–30–03; 8:45 am]

BILLING CODE 4510–30–P

DEPARTMENT OF LABOR

Employment and Training Administration

[TA–W–53,250]

L.S. Starrett Company, Inc., Alum Bank, Pennsylvania; Notice of Termination of Investigation

Pursuant to section 221 of the Trade Act of 1974, as amended, an investigation was initiated on October 24, 2003 in response to a petition filed on behalf of workers of L.S. Starrett Company, Inc., Alum Bank, Pennsylvania.

The investigation revealed that the subject firm did not separate or threaten to separate a significant number or proportion of workers as required by section 222 of the Trade Act of 1974. Significant number or proportion of the workers means that at least three workers in a firm with a workforce of fewer than 50 workers would have to be affected. Separations by the subject firm did not meet this threshold level; consequently the investigation has been terminated.

Signed at Washington, DC this 17th day of November 2003.

Linda G. Poole,

Certifying Officer, Division of Trade Adjustment Assistance.

[FR Doc. 03–31987 Filed 12–30–03; 8:45 am]

BILLING CODE 4510–30–P

DEPARTMENT OF LABOR

Employment and Training Administration

[TA–W–52,626]

Paper Converting Machine Company, Green Bay, Wisconsin; Amended Certification Regarding Eligibility To Apply for Worker Adjustment Assistance and Alternative Trade Adjustment Assistance

In accordance with section 223 of the Trade Act of 1974 (19 U.S.C. 2273), and

under section 246 of the Trade Act of 1974, as amended, the Department of Labor issued a Certification of Eligibility to Apply for Worker Adjustment Assistance and Alternative Trade Adjustment Assistance on September 11, 2003, applicable to workers of Paper Converting Machine Company located in Green Bay, Wisconsin. The notice was published in the **Federal Register** on October 10, 2003 (68 FR 58720).

At the request of the State Agency, the Department reviewed the certification for workers of the subject firm. The workers produce paper converting machinery.

The review shows that all workers of Paper Converting Machine Company, Green Bay, Wisconsin, were certified eligible to apply for adjustment assistance under TA–W–39,100, which does not expire until January 18, 2004.

Therefore, in order to avoid an overlap in worker group coverage, the Department is amending the August 14, 2002 impact date established for TA–W–52,626, to read January 19, 2004.

The amended notice applicable to TA–W–52,626 is hereby issued as follows:

''All workers of Paper Converting Machine Company, Green Bay, Wisconsin, who become totally or partially separated from employment on or after January 19, 2004, through September 11, 2005, are eligible to apply for adjustment assistance under Section 223 of the Trade Act of 1974, and are also eligible to apply for alternative trade adjustment assistance under Section 246 of the Trade Act of 1974, as amended.''

Signed at Washington, DC, this 22nd day of December 2003.

Elliott S. Kushner,

Certifying Officer, Division of Trade Adjustment Assistance.

[FR Doc. 03–31989 Filed 12–30–03; 8:45 am]

BILLING CODE 4510–30–P

DEPARTMENT OF LABOR

Employment and Training Administration

[TA–W–51,595]

Paradise Fisheries, Kodiak, AK; Dismissal of Application for Reconsideration

Pursuant to 29 CFR 90.18(C) an application for administrative reconsideration was filed with the Director of the Division of Trade Adjustment Assistance for workers at Paradise Fisheries, Kodiak, Alaska. The application contained no new substantial information which would bear importantly on the Department's determination. Therefore, dismissal of the application was issued.

TA–W–51,595; Paradise Fisheries, Kodiak, Alaska (August 7, 2003).

Signed at Washington, DC this 28th day of November, 2003.

Timothy Sullivan,

Director, Division of Trade Adjustment Assistance.

[FR Doc. 03–31981 Filed 12–30–03; 8:45 am]

BILLING CODE 4510–30–M

DEPARTMENT OF LABOR

Employment and Training Administration

[TA–W–53,365]

Tietex International, Ltd, Rocky Mount Plant, Spartanburg, South Carolina; Notice of Termination of Investigation

Pursuant to section 221 of the Trade Act of 1974, as amended, an investigation was initiated on October 28, 2003 in response to a worker petition filed on behalf of workers at Tietex International, LTD, Rocky Mount Plant, Spartanburg, South Carolina.

Further review of the petition and information provided by one of the petitioners, finds that the Rocky Mount Plant is in Rocky Mount, North Carolina, not Spartanburg, South Carolina. Workers of Tietex International, LTD, Rocky Mount Plant, Rocky Mount, Virginia, are covered under an existing certification to apply for trade adjustment assistance, petition number TA–W–53,273. Consequently, further investigation in this case would serve no purpose, and the investigation has been terminated.

Signed at Washington, DC this 17th day of November, 2003.

Linda G. Poole,

Certifying Officer, Division of Trade Adjustment Assistance.

[FR Doc. 03–31986 Filed 12–30–03; 8:45 am]

BILLING CODE 4510–30–P

DEPARTMENT OF LABOR

Employment and Training Administration

[TA–W–53,476]

Weidmann Systems International, Inc., St. Johnsbury, Vermont; Notice of Termination of Investigation

Pursuant to section 221 of the Trade Act of 1974, an investigation was initiated on November 7, 2003 in response to a worker petition which was filed on behalf of workers at Weidmann Systems International, Inc., St, Johnsbury, Vermont.

An active certification covering the petitioning group of workers is already in effect (TA–W–42,222A, as amended). Consequently, further investigation in this case would serve no purpose, and the investigation has been terminated.

Signed in Washington, DC this 25th day of November 2003.

Elliott S. Kushner,

Certifying Officer, Division of Trade Adjustment Assistance.

[FR Doc. 03–31984 Filed 12–30–03; 8:45 am]

BILLING CODE 4510–30–P

DEPARTMENT OF LABOR

Employment and Training Administration

[TA–W–52,904]

York International Corporation, York, Pennsylvania; Amended Certification Regarding Eligibility To Apply for Worker Adjustment Assistance and Alternative Trade Adjustment Assistance

In accordance with section 223 of the Trade Act of 1974 (19 U.S.C. 2273) the Department of Labor issued a Certification of Eligibility to Apply for Worker Adjustment Assistance on October 30, 2003, applicable to workers of York International Corporation located in York, Pennsylvania. The notice was published in the **Federal Register** on November 28, 2003 (68 FR 66880).

At the request of the petitioner, the Department reviewed the certification for workers of the subject firm producing industrial large tonnage chillers.

The review shows that the Department inadvertently omitted its findings regarding worker group eligibility to apply for Alternative Trade Adjustment Assistance under section 246 of the Trade Act of 1974, as amended. In order for the Department to issue a certification of eligibility to apply for ATAA, the group eligibility requirements of section 246 of the Trade Act must be met. The Department determined in this case that the requirements of Section 246 were met.

A significant number of workers at the firm are age 50 or over and possess skills that are not easily transferable. Competitive conditions within the industry are adverse.

Therefore, the Department is amending the certification to include eligibility for workers of the subject firm to apply for ATAA.

The amended notice applicable to TA–W–52,904 is hereby issued as follows:

''All workers of York International Corporation, York, Pennsylvania, who became totally or partially separated from employment on or after September 9, 2002 through October 30, 2005, are eligible to apply for adjustment assistance under section 223 of the Trade Act of 1974, and are eligible to apply for alternative trade adjustment assistance under section 246 of the Trade Act of 1974, as amended.''

Signed at Washington, DC, this 2nd day of December 2003.

Linda G. Poole,

Certifying Officer, Division of Trade Adjustment Assistance.

[FR Doc. 03–31988 Filed 12–30–03; 8:45 am]

BILLING CODE 4510–30–P

DEPARTMENT OF LABOR

Employment and Training Administration

Workforce Investment Act—Indian and Native American Employment and Training Programs; Solicitation for Grant Applications—Final Grantee Designation Procedures for Program Years 2004 and 2005

Announcement Type: New. Notice of final designation procedures for grantees.

Funding Opportunity Number: SGA/DFA–04–100.

Catalog of Federal Domestic Assistance (CFDA) Number: 17.265.

Key Dates: Deadline for Notice of Intent Part A—January 30, 2004.

I. Funding Opportunity Description

Section 166 of the Workforce Investment Act (WIA) authorizes programs to serve the employment and training needs of Indians and Native Americans through competitive award by the Department of Labor (DOL) of two-year grants, contracts, or cooperative agreements with Indian tribes, tribal organizations, Alaska Native entities, Indian-controlled organizations serving Indians, or Native Hawaiian organizations. *See* section 166, Public Law 105–220 as amended, codified at 29 U.S.C. 2911. Special employment and training services for Indian and Native American people were previously provided under the Job Training Partnership Act (JTPA) Section 401 and its predecessor, Section 302 of the Comprehensive Employment and Training Act (CETA). DOL has issued two previous rounds of WIA section 166 awards—for Program Years (PY) 2000–2001 and 2002–2003.

In anticipation of Congressional reauthorization of WIA, this Solicitation for Grant Applications (SGA) contains the procedures by which DOL will select and designate service providers for PY 2004 and 2005 (July 1, 2004 to June 30, 2006) to operate Indian and Native American Employment and Training Programs under WIA section 166 within specified ''service areas.'' Grantees must ensure that all eligible population members have equitable access to employment and training services within the service area. Requirements for these programs are set forth in WIA section 166 and its regulations, found at 20 CFR part 668, published at 65 FR 49294, 49435 (August 11, 2000). The specific eligibility and application requirements for designation are set forth at 20 CFR part 668, subpart B, which is attached to this SGA as Exhibit A.

Under the statutory and regulatory requirements, DOL will select entities for section 166 funding for a two-year period. Designated service providers will be funded annually during the designation period, contingent upon all other grant award requirements being met, Congress' reauthorization of WIA, any new or modified terms of WIA reauthorization, and the continuing availability of Federal funds.

All applicants for designation as a section 166 service provider for PY 2004 and 2005 must submit a Notice of Intent Part A in accordance with this SGA if they wish to receive or continue to receive WIA funds. DOL has determined that no waivers of competition under WIA section 166(c)(2) will be available for the current two-year designation cycle because such waivers were allowed in the last designation cycle for PY 2002 and 2003. Existing grantees and potential eligible providers participating in Public Law 102–477 Demonstration Projects, which allow Federally recognized tribes to consolidate formula-funded employment, training, and related dollars under a single service plan administered by the Bureau of Indian Affairs, also must submit an application in accordance with this SGA.

This SGA provides the information that all applicants need to submit requests for WIA section 166 designation. A ''responsibility review'' will be conducted of all applications as part of the designation process, in accordance with 20 CFR 667.170, 668.220, and 668.230, to ensure that applicants are capable of properly handling and accounting for Federal funds. Entities new to this process should be aware that being designated as a section 166 service provider according to this SGA will not automatically result in a grant award. Entities that successfully complete the designation process, including winning any competition(s) for service area(s) that may occur as defined in this SGA, must prepare a two-year Comprehensive Services Plan that must be approved by DOL. Instructions for preparation of the Comprehensive Services Plan will be issued to all designated service providers in accordance with 20 CFR part 668, subpart G.

Potential applicants should be aware that Comprehensive Services Plans for PY 2004 and 2005 will be required to include an agreement to maintain records adequate to evaluate the grantee's annual performance against the ''Common Measures'' from the U.S. Office of Management and Budget (OMB) for evaluating all Federally funded employment and training programs. *See* Employment and Training Administration (ETA) Training and Employment Notice No. 8–02 (March 27, 2003) (available at *http://ows.doleta.gov/dmstree/ten/ten2k2/ten_08-02.htm*). The Comprehensive Services Plan also will be required to include estimates of expected grantee performance against the OMB Common Measures. For the Comprehensive Services (*i.e.*, Indian ''adult'') employment and training program, the Common Measures are as follows:

- Entered Employment
- Retention in Employment
- Earnings Increase
- Program Efficiency

For those entities serving reservation areas and qualifying for Supplemental Youth Services funding, the ''youth'' Common Measures are as follows:

- Placement in Employment or Education
- Attainment of a Degree or Certificate by Participants
- Literacy and Numeracy Gains (by Participants)
- Program Efficiency

After a section 166 designee's Comprehensive Services Plan is approved by DOL, a grant agreement (''Notice of Obligation'' or NOO) must be executed in accordance with 20 CFR 668.292. Each NOO will reflect the amount of section 166 funds awarded as determined in accordance with 20 CFR 668.296 and 668.440.

In preparing applications for designation, applicants should bear in mind that the purpose of section 166 of WIA is ''to support employment and training activities for Indian, Alaska Native, and Native Hawaiian individuals in order—

''(A) to develop more fully the academic, occupational, and literacy skills of such individuals;

''(B) to make such individuals more competitive in the workforce; and

''(C) to promote the economic and social development of Indian, Alaska Native, and Native Hawaiian communities in accordance with the goals and values of such communities.'' Congress has also directed that section 166 programs be administered consistent with the principles of the Indian Self-Determination and Education Assistance Act, 25 U.S.C. 450, *et seq.*, and the government-to-government relationship between the Federal government and Indian tribal governments. WIA section 166(a)(2).

Note: Congress is now considering legislation to reauthorize WIA; statutory changes may necessitate revision of the designation or award procedures for PY 2004–2005. This SGA has been revised from prior SGAs under WIA section 166 to comply with the new standard format issued by OMB for Federal grant solicitations. See 68 FR 37370–79 (June 23, 2003). The ''General Designation Principles'' included in prior SGAs for this program have been omitted because we have determined that inclusion of the actual regulatory text (see Exhibit A attached) will be more useful to potential applicants.

II. Award Information

Type of assistance instrument: An initial two-year grant, which may be extended for an additional two years under appropriate circumstances.

As stated in Section I, no waivers of competition are available for the PY 2004–2005 grant cycle. Therefore applications for new awards may compete with applications from existing grantees or for supplementation of existing projects. The amount of WIA Section 166 funds to be awarded to designated Native American organizations will be determined under the procedures set by 20 CFR 668.296, as well as by § 668.440 for youth funds. DOL will determine award amounts after designation of service areas and service providers and once funding appropriations for the grant period have been made by Congress.

Amount of funds to be awarded. Depending upon final appropriation legislation, DOL anticipates awarding approximately $55 million for the Comprehensive Services program and $15 million for Supplemental Youth Services under this SGA.

Anticipated number of awards. Approximately 190 grantees will be designated under this SGA.

Expected amounts of individual awards. Awards under the Comprehensive Services program are anticipated to range from approximately $20,000 to approximately $6.5 million. Awards for the Supplemental Youth Services program are anticipated to range from approximately $4,000 to approximately $2.5 million. Final award amounts in each category will depend on Census data and the final PY 2004 and PY 2005 appropriation levels.

Average amount of funding per award. For PY 2003, the average Comprehensive Services grant amount was $295,647, and the average Supplemental Youth Services grant amount was $102,170. We expect that average funding for the PY 2004 awards will not differ significantly from these amounts.

Anticipated start dates and periods of performance for new awards. New and existing grantees will be expected to commence operations on July 1, 2004. The initial performance period for all grantees will be from July 1, 2004 to June 30, 2006.

III. Eligibility Information

1. Eligible Applicants

To be eligible for designation as a Section 166 grantee, an entity must meet all eligibility requirements of WIA Section 166 and 20 CFR 668.200, as well as the application and designation requirements found at 20 CFR part 668, subpart B (see Exhibit A attached). Potential applicants are expected to thoroughly review and comply with the statute and regulations.

Among other requirements, eligible entities must have a legal status as a government, an agency of a government, a private non-profit corporation (*i.e.*, incorporated under IRS section 501(c)(3) or 501(c)(4)), or a consortium that satisfies the requirements of 20 CFR 668.200(a), (b), and (c)(6). Additionally, eligible entities must be:

- Indian tribes, tribal organizations, Alaska Native entities, Indian-controlled organizations serving Indians, or Native Hawaiian organizations;
- Consortia of eligible entities; or
- State-recognized tribal organizations serving individuals who were eligible to participate under JTPA Section 401 as of August 6, 1998.

See WIA Sections 166(b), (c)(1), and (d)(2)(B); 20 CFR 668.200(c) and (d). Community and faith-based organizations are eligible to apply for Section 166 grants in accordance with WIA Section 166(c) and 20 CFR 668.200(c) and (d) if they are Native American- or Native Hawaiian-controlled. Non-profit corporations organized under 501(c)(4) that engage in lobbying activities are not eligible to receive Federal funds and grants, as required by Section 18 of the Lobbying Disclosure Act of 1995, Public Law 104–65 (2 U.S.C. 1611).

Additional key requirements include the following: Applicants must satisfy a responsibility review and demonstrate that they have the ability to administer Federal funds. *See* 20 CFR 667.170, 668.200(a)(2), 668.220, and 668.230. Requested geographic service areas must comply with eligibility restrictions based on the formula funding level associated with population size. *See* 20 CFR 668.200(a)(3), 668.296(b), and 668.440(a).

The statute and regulations also establish comparative priorities for designation among eligible entities. A Federally recognized Indian tribe, band, or group on its reservation (including former reservation areas in Oklahoma), and Alaska Native entities defined in the Alaska Native Claims Settlement Act (ANCSA) (or consortia that include a tribe or an ANCSA entity) will receive the highest priority over any other organization for designation as the service provider for the area over which the entity has legal jurisdiction, provided that the entity has the capability to administer the program and also meets all eligibility and regulatory requirements. *See* 20 CFR 668.210(a). For areas not covered by the highest priority, DOL will designate other eligible organizations as service providers, which in some instances might be Indian tribes, bands, or groups applying for off-reservation areas. DOL will follow the regulatory procedures for consultation and communication with Native American leaders in affected service areas. *See* 20 CFR 668.210 and 668.280. New applicants (and incumbent grantees seeking designation for areas in addition to those covered by existing grants) are expected to clearly demonstrate a working knowledge of the community that they plan to serve, including available resources, resource utilization, and acceptance by the service population.

Applicants must submit a separate, complete Notice of Intent in accordance with Section IV(2) for each non-contiguous geographic area for which they seek designation. DOL is not required to adhere to the geographical service area requested in a Notice of Intent, but may make a section 166 designation for all of the area requested or, if acceptable to the designee, a portion of the area requested or more than the area requested.

Organizations with no prior grant history with the Department, or about whom there are financial or grant management concerns, may be

conditionally designated pending an on-site review and/or a six-month assessment of program progress. Failure to satisfy these conditions may result in a withdrawal of designation.

As discussed in Section IV(2), applicants' Notice of Intent submission must include documentation supporting their eligibility to serve as a section 166 grantee, including documentation of their legal status and ability to administer funds.

The following definitions and special designation situations will be used by DOL in determining eligibility and designating section 166 service providers:

Indian or Native American-Controlled Organization. In accordance with WIA section 166(c) and 20 CFR 668.200(c), an Indian or Native American-controlled organization is defined as any organization with a governing body, more than 50 percent of whose members are Indians or Native Americans. Such an organization can be a tribal government, Native Alaska, or Native Hawaiian entity, consortium, or public or private non-profit agency. For the purpose of designation determinations, the governing body must have decision-making authority for the WIA section 166 program. It should be noted that, under WIA section 166(d)(2)(B), individuals who were eligible to participate under section 401 of JTPA on August 6, 1998, are or will be eligible to participate under WIA. Organizations serving such individuals will be considered ''Indian controlled'' for WIA section 166 purposes if they meet the criteria of this section.

Service Area. Service Area is defined as the geographic area, described as States, counties, or reservations, or parts or combinations thereof, for which a section 166 designation is made. In some cases, a service area also will be defined in terms of the specific population to be served. The service area is identified by the Grant Officer in the formal designation letter. Grantees must ensure that all eligible population members have equitable access to employment and training services within their designated service area. *See* 20 CFR 668.650(a).

Service Areas for Alaska Native Entities. Through prior grant competitions, DOL has established geographic service areas for Alaska Native employment and training grantees based on the following: (a) The boundaries of the regions defined in the Alaska Native Claims Settlement Act (ANCSA); (b) the boundaries of major sub-regional areas where the primary provider of human resource development-related services is an Indian Reorganization Act (IRA)-recognized tribal council; and (c) the boundaries of the one Federal reservation in Alaska. These service areas may be modified as a result of the current grant competition. Within these established or revised geographic service areas, DOL will designate the primary Alaska Native-controlled human resource development services provider or an entity formally selected by that provider. In the past, these entities have been regional non-profit corporations, IRA-recognized tribal councils, and the tribal government of the Metlakatla Indian Community.

Service Areas for Oklahoma Indians. Through prior grant competitions, DOL has established geographic service areas for Indian employment and training programs in Oklahoma, which have generally been countywide areas. These service areas may be modified as a result of the current grant competition. In cases in which a significant portion of the land area of an individual county lies within the traditional jurisdiction(s) of more than one tribal government, the service area has been subdivided to a certain extent on the basis of tribal identification information contained in the most recent Federal Decennial Census of Population. Wherever possible, arrangements mutually satisfactory to grantees in adjoining or overlapping geographic service areas will be honored by DOL. Where such mutually satisfactory arrangements cannot be made, DOL will designate and assign service areas to Native American grantees in a manner that is consistent with WIA and that will preserve continuity of services and prevent unnecessary fragmentation of the programs.

2. Cost Sharing or Matching

The section 166 program does not require grantees to share costs or provide matching funds.

3. Other Eligibility Criteria

In accordance with 29 CFR part 98, entities that are debarred or suspended shall be excluded from Federal financial assistance and are ineligible to receive a section 166 grant. Additionally, entities that have been convicted of violation of 18 U.S.C. 665 and/or 666, or that are in default of any debt repayment agreement signed with the Department or any Federal agency, are ineligible to receive an award under this SGA, unless exceptional circumstances are demonstrated to the satisfaction of DOL.

All recipients of services under section 166 must meet the definition of Indian, Alaska Native, or Native Hawaiian found at WIA section 166(b) and in the WIA regulations. *See* WIA section 166(d) and 20 CFR 668.300. In addition, priority of services must be given to veterans and spouses of certain veterans, in accordance with the provisions of the ''Jobs for Veterans Act,'' Public Law 107–288 (38 U.S.C. 4215), which provides priority of service to veterans and spouses of certain veterans for the receipt of employment, training, and placement services in any job training program directly funded, in whole or in part, by the Department of Labor. Please note that, to obtain priority of service, a veteran must meet the program's eligibility requirements. ETA Training and Employment Guidance Letter (TEGL) No. 5–03 (September 16, 2003) provides general guidance on the scope of the veterans priority statute and its effect on current employment training programs. DOL anticipates updating this guidance at the time of WIA reauthorization and issuing individual guidance on each affected employment training program.

IV. Application and Submission Information

1. Address To Request Application Package

This Solicitation for Grant Applications, together with the attached excerpt of regulations (20 CFR part 668, subpart B), includes all information needed to apply for designation as a section 166 service provider.

2. Content and Form of Application Submission

All applicants for designation as a section 166 service provider for PY 2004 and 2005, except as noted in the next sentence, must submit a signed original and two copies of a ''Notice of Intent—Part A'' containing the information listed below. Incumbent Federally recognized tribes participating in the demonstration under Public Law 102–477 whose status has not changed need only submit: a cover letter stating the program's status has not changed, and a completed SF–424, ''Application for Federal Assistance,'' both signed by an authorized signatory official for the applicant. Note that a separate Notice of Intent—Part A must be submitted for each non-contiguous geographic service area.

Beginning October 1, 2003, all applicants for Federal grant and funding opportunities are required to have a Dun and Bradstreet (DUNS) number. *See* OMB Notice of Final Policy Issuance, 68 FR 38402 (June 27, 2003). Applicants for section 166 designation must supply

their DUNS number in item #5 of the new SF–424 issued by OMB (Rev. 9–2003). *See* Exhibit B. Where a consortium is formed to apply for designation, the consortium must obtain a DUNS number. If award will be made to the lead entity in the consortium, then the DUNS number for that lead entity should be used. The DUNS number is a nine-digit identification number that uniquely identifies business entities. Obtaining a DUNS number is easy and there is no charge. To obtain a DUNS number, access the following Web site: *http://www.dunandbradstreet.com* or call 1–866–705–5711. Requests for exemption from the DUNS number requirement must be made to OMB.

In some circumstances, as defined in Section V(2), DOL may determine based on review of the Part A submissions that further competition is required for a particular geographic area. In these instances, competing organizations will be notified and required to provide the information in Part B within 15 days of receiving notification from the Grant Officer of competition.

The Grant Officer may require additional or clarifying information or action, including a site visit, before designating applicants and/or before determining whether to conduct competitive procurement for a particular geographic service area. In addition, applicants may be required to address actions taken to correct deficiencies identified by the Department, including specific time frames for completion.

A. Notice of Intent—Part A Requirements

Each application must include a cover letter or other document (for example, a tribal resolution), signed by an authorized signatory official, that provides the information listed below or indicates that it accompanies the application.

(i) A completed SF–424, ''Application for Federal Assistance,'' signed by the authorized signatory official. See Exhibit B.

(ii) Identification of the applicant's legal status, including copies of articles of incorporation for non-profit corporations or consortium agreement, if not already on file with DOL's Division of Indian and Native American Programs (DINAP).

(iii) A specific description of the geographic territory being applied for by State(s), counties, reservation(s), or subparts or combinations thereof, and/or by service population.

(iv) A very brief summary of the employment and training or human resource development program(s) serving Native Americans that the entity currently operates or has operated within the previous two-year period. The summary should identify the funding source, contact person, and phone number for the program(s).

(v) A brief description of the planning process used by the entity, including involvement of the governing body and local employers.

(vi) Evidence to establish an entity's ability to administer funds under 20 CFR 668.220, and 668.230, which should at a minimum include:

(a) A statement that the organization is in compliance with the Department's debt management procedures; and

(b) A statement that fraud or criminal activity has not been found in the organization, or a brief description of the circumstance where fraud or criminal activity has been found and a description of resolution, corrective action and current status; and

(c) A narrative demonstrating that an entity has or can acquire the necessary program and management personnel to safeguard Federal funds and effectively deliver program services that support the purposes of the Workforce Investment Act; and

(d) If not otherwise provided, a narrative demonstrating that an entity has successfully carried out or has the ability to successfully carry out activities that will strengthen the ability of the individuals served to obtain or retain unsubsidized employment, including the past two-year history of publicly funded grants/contracts administered including identification of the fund source and a contact person.

(vii) The assurances required by 29 CFR 37.20.

B. Notice of Intent—Part B Requirements

If the Grant Officer determines that there is competition for all or part of a given service area, as discussed in Section V(2) below, the Grant Officer will notify competing applicants and require submission of the following ''Part B'' information:

(i) Evidence that the entity represents the community proposed for services such as: Demonstration of support from Native American-controlled organizations, State agencies, or other entities with specific knowledge of the applicant's operational capability. Federally recognized tribes and Hawaiian and Alaska Native entities need not submit evidence of support regarding their own reservations or areas of legal jurisdiction. However, such entities are required to provide this evidence for any area that they wish to serve beyond their reservation boundaries, Congressionally mandated area, or Federally established service areas.

(ii) Submission of a service plan and other information expanding on the information required at Part A that the applicant feels can strengthen its case, including information on any unresolved or outstanding administrative problems.

An applicant whose initial Notice of Intent submission contained all Part B information will not need to supplement. Exclusive of charts, graphs, or letters of support, the additional Part B information submitted in a situation involving competition should not exceed *75* pages of double-spaced, unreduced type.

3. Submission Dates and Times

Notices of Intent (NOIs) that comply with the requirements of this solicitation and that satisfy all Part A requirements must be received in the Department by 1 p.m. on January 30, 2004. NOIs not received by the deadline will be accepted up to 15 calendar days after the deadline only with an official, U.S. Postal Service postmark indicating timely submission. Dates stamped by private express delivery service or by metered mail are unacceptable as proof of submission. All applicants are advised that U.S. mail delivery in the Washington, DC area is still erratic due to continuing concerns involving possible anthrax contamination. *All applicants must take this into consideration when preparing to meet the application deadline, as applicants assume the risk for ensuring a timely submission; that is, if because of these mail problems, the Department does not receive an application or receives it too late to give it proper consideration, even if it was timely mailed, the Department will not consider the application.*

Submission addresses and acceptable means of delivery are addressed in Section IV(6) below.

4. Intergovernmental Review

This funding opportunity is not subject to Executive Order (EO) 12372, ''Intergovernmental Review of Federal Programs.''

5. Funding Restrictions

Potential applicants should review 20 CFR part 668, subpart H regarding administrative requirements for WIA section 166 grants. Rules relating to allowable costs are addressed in 20 CFR 667.200 through 667.220. Under 20 CFR 667.210(b), limits on administrative costs will be negotiated with the grantee and identified in the grant award

document. While there are no specific limits on indirect costs, the amount of indirect cost charged to the grant is subject to the overall limitation on administrative costs as negotiated in the grant agreement. Construction (as opposed to maintenance and/or repair) costs are generally not allowed under WIA. Certain pre-award costs may be allowable with specific approval of the Grant Officer in accordance with OMB Circular A–87 or A–122.

6. Other Submission Requirements

Means of Delivery: Notices of Intent may be submitted by U.S. mail, overnight delivery, hand delivery, or e-mail in accordance with the instructions below. Please note that faxed applications will not be accepted.

Addresses: Send a signed original and two copies of the Notice of Intent—Part A (and any later submissions) to Ms. Athena Brown, Acting Chief, Division of Indian and Native American Programs, Room S–5206 FPB ATTN: MIS Desk, U.S. Department of Labor, 200 Constitution Avenue, NW., Washington, DC 20210.

Submission of Notice of Intent Via E-Mail: Due to the erratic mail delivery in the Washington, DC area, applicants have the option of submitting Notices of Intent *via* e-mail to *cesario.laura@dol.gov.* Due to the high volume of applications, the return receipt option (instructions below) must be utilized to verify e-mail transmission of the application. Should the applicant choose to e-mail the Notice of Intent, the applicant must send via overnight mail: the signature sheet with an original signature; a copy of the applicant's e-mail; *and* a copy of the e-mail verification of transmission. Notices of Intent sent by e-mail will be accepted in Microsoft WORD or WordPerfect only.

Instructions for Obtaining E-Mail Return Receipt: While in the e-mail and before sending, click on ''file,'' go to ''properties, return notification,'' and finally click on options for ''Delivery receipt requested,'' ''Read receipt requested,'' or similar options that will send the e-mail author an automatic e-mail when the e-mail is either delivered to DOL or opened by DOL. You should print and retain a copy of your e-mail receipt and send a copy of the receipt to DOL per the previous paragraph.

For Further Information Contact: We recommend that you confirm DOL's receipt of your submission by contacting Ms. Andrea T.B. Brown, U.S. Department of Labor, Division of Indian and Native American Programs, telephone number (202) 693–3736 (this is not a toll-free number).

V. Application Review Information

1. Application Evaluation Criteria

The factors listed below will be considered in evaluating applicants' approach to providing services and their ability to produce the best outcomes for the individuals residing in the service area.

Factors	Maximum allowable points
A. (i) Previous experience or demonstrated capabilities in successfully operating an employment and training program established for and serving Indians and Native Americans.	30
(ii) Previous experience in operating or coordinating with other human resources development programs serving Indians and Native Americans.	10
(iii) Approach to providing services, including identification of the training and employment problems and needs in the requested area, and approach to addressing such needs.	10
B. Demonstration of the ability to maintain continuity of services to Indian or Native American participants consistent with those previously provided in the community.	10
C. (i) Description of the entity's planning process and demonstration of involvement with the INA community.	5
(ii) Demonstration of involvement with local employers within the service area, and with local Workforce Investment Boards and Youth Councils, etc.	5
D. Demonstration of coordination and linkages with Indian and non-Indian employment and training resources within the community, including, but not limited to, community and/or faith-based organizations, and One-Stop systems (as applicable), to eliminate duplication of effort.	15
E. Demonstration of support and recognition by the Native American community and service population, including local tribes and adjacent Indian organizations and the client population to be served.	15
Total	100

2. Review and Selection Process

This section identifies the overall review process and the procedures that DOL will use when a competitive grantee designation process is appropriate.

Overall Review Process. DOL's Division of Indian and Native American Programs (DINAP), with the concurrence of the Grant Officer, will conduct an initial review of all submissions for section 166 designation for compliance with the statute, regulations, and this SGA. The initial review will consider, among other things, timeliness and completeness of submission, applicant eligibility, eligibility of the requested service area and population, and application of the WIA regulations at 20 CFR 668.210 regarding priority designation for Native American, Alaskan, and Hawaiian organizations. The review will include compliance with financial responsibility criteria, in accordance with 20 CFR 668.220 and 668.230, to ensure that applicants are capable of properly handling and accounting for Federal funds.

Organizations with no prior grant history with the Department, or about whom there are financial or grant management concerns, may be conditionally designated pending an on-site review and/or a six-month assessment of program progress. Failure to satisfy such conditions may result in a withdrawal of designation.

The Grant Officer is not required to adhere to the geographical service area requested in a Notice of Intent. The Grant Officer may make the designation applicable to all of the area requested or, if acceptable to the applicant, a portion of the area requested or more than the area requested.

Competitive Selection Procedures. If two or more eligible entities apply to provide section 166 services in the same geographic area and no applicant is entitled to priority designation under 20 CFR 668.210, then a competitive selection will be made following the procedures in this section. When competitive selection is necessary, DINAP will notify each applicant of the competing Notices of Intent no later than 45 days after publication of this

SGA in the **Federal Register**, and invite the competing applicants to submit the supplemental ''Part B'' Notice of Intent and any additional information that the applicant determines is appropriate. To be considered, the Part B information and any additional information must be received by the Chief of DINAP or be postmarked no later than 15 days after the applicant is notified of the competition.

Where competitive evaluation is required, the Grant Officer will use a formal panel review process to score the information submitted with the complete Notice of Intent (Part A *and* B), using the criteria listed in Section V(1). The review panel will include individuals with knowledge of or expertise in programs dealing with Indians and Native Americans. The purpose of the panel is to review and evaluate an organization's potential, based on its application (including the supplemental information required in Part B), to provide services to a specific Native American community, to rate the proposals in accordance with the rating criteria described in Section V(1), and to make recommendations to the Grant Officer. The panel will be provided the information described in the Notice of Intent.

It is DOL's policy that no information affecting the panel review process will be solicited or accepted after the deadlines for receipt of applications set in this SGA. All submitted information must be in writing. This policy does not preclude the Grant Officer from requesting additional information independent of the panel review process.

During the review, the panel will not give weight to undocumented assertions. Any information must be supported by adequate and verifiable documentation, *e.g.*, supporting references must contain the name of the contact person, an address, and telephone number. Panel ratings and recommendations are advisory to the Grant Officer.

Determination of Designation. The Grant Officer will make the final determination of section 166 designees and of the geographic service area for which each designation is made. In accordance with 20 CFR 668.250(b)(4), the Grant Officer will select the entity that demonstrates the ability to produce the best outcomes for its customers, based on all available evidence. In addition to considering the review panel's rating in those instances in which a panel is convened, the Grant Officer will consider input from DINAP, other offices within the Employment and Training Administration, and the DOL Office of the Inspector General, and any other available information regarding applicants' financial capability, operational capability, and responsibility. The Grant Officer need not designate an entity for every geographic area. *See* 20 CFR 668.294. If there are services areas for which no entity submitted a complete Notice of Intent or for which no entity achieved a score of at least 70, the Grant Officer may either designate no service provider or may designate an entity based on demonstrated capability to provide the best services to the client population. DOL reserves the right to select applicants with scores lower than 70 or lower than competing applications if such selection would, in DOL's judgment, result in the most effective and appropriate combination of services to the client population, funding, and costs.

An applicant for section 166 designation that is refused such designation, in whole or in part, will be afforded the opportunity to appeal non-designation as provided at 20 CFR 668.270.

3. Anticipated Announcement and Award Dates

If at all possible, designation decisions will be made by March 1, 2004.

VI. Award Administration Information

1. Award Notices

The Grant Officer, Ms. Laura Cesario, will notify section 166 applicants of designation results as follows:

Designation Letter. The designation letter signed by the Grant Officer will serve as official notice of an organization's designation. The designation letter will include the geographic service area for which the designation is made.

Conditional Designation Letter. Conditional designations will include identification of the geographic service area, the nature of the conditions, actions required for the designee to achieve full designation status, and the time frame in which such actions must be accomplished.

Non-Designation Letter. Any organization not designated, in whole or in part, for a requested geographic service area will be notified formally of the non-designation and given the basic reasons for the determination.

Notification by a person or entity other than the grant officer that an organization has been designated is not valid.

2. Administrative and National Policy Requirements

Grantees must comply with the provisions of WIA and its regulations, including those parts focused specifically on programs for Indians and Native Americans. As referenced in Section IV(2), Notices of Intent must provide assurances of compliance with nondiscrimination and equal opportunity laws, as listed in 29 CFR 37.20. Additionally, all grants will be subject to the following administrative standards and provisions, if applicable to the particular grantee:

- 20 CFR part 667—Administrative provisions under Title I of WIA
- 29 CFR parts 30, 31, 32, 33 and 36—Equal Employment Opportunity in Apprenticeship and Training; Nondiscrimination in Federally Assisted Programs of the Department of Labor—Effectuation of Title VI of the Civil Rights Act of 1964; Nondiscrimination on the Basis of Handicap in Programs or Activities Conducted by the Department of Labor; and Nondiscrimination on the Basis of Sex in Education Programs Receiving or Benefiting from Federal Financial Assistance
- 29 CFR part 37—Implementation of the Nondiscrimination and Equal Opportunity Provisions of the Workforce Investment Act of 1998 (WIA)
- 29 CFR part 93—Lobbying
- 29 CFR part 95—Uniform Administrative Requirements for Grants and Agreements with Institutions of Higher Education, Hospitals, and Other Non-Profit Organizations, and with Commercial Organizations
- 29 CFR part 96—Federal Standards for Audit of Federally Funded Grants, Contracts, and Agreements
- 29 CFR part 97—Uniform Administrative Requirements for Grants and Cooperative Agreements to State and Local Governments
- 29 CFR part 98—Governmentwide Debarment and Suspension (Non-Procurement) and Governmentwide Requirements for Drug-Free Workplace (Grants)
- 29 CFR part 99—Audit of States, Local Governments, and Non-Profit Organizations

In accordance with WIA Section 195(6) and 20 CFR 668.630(f), programs funded under this SGA may not involve political activities. Additionally, in accordance with Section 18 of the Lobbying Disclosure Act of 1995, Public Law 104–65 (2 U.S.C. 1611), non-profit entities incorporated under 501(c)(4) that engage in lobbying activities are not eligible to receive Federal funds and

grants. Further, this program is subject to the provisions of the ''Jobs for Veterans Act,'' Public Law 107–288, which provides priority of service to veterans and spouses of certain veterans for the receipt of employment, training, and placement services in any job training program directly funded, in whole or in part, by the Department of Labor. Please note that, to obtain priority of service, a veteran must meet the program's eligibility requirements. ETA Training and Employment Guidance Letter (TEGL) No. 5–03 (September 16, 2003) provides general guidance on the scope of the veterans priority statute and its effect on current employment training programs. DOL anticipates updating this guidance at the time of WIA reauthorization and issuing individual guidance on each affected employment training program.

3. Reporting

Section 166 grantees will be required to submit reports on financial expenditures, program participation, and participant outcomes on no more than a quarterly basis. Grantees are encouraged to file reports electronically, but they may also be submitted in paper form. As reflected in Section I, reporting requirements will be modified for PY 2004–2005 to incorporate OMB Common Measures and will include evaluation of the Grantee's annual performance against those Common Measures. Current reporting requirements for section 166 grants are found at 20 CFR part 668, subpart F.

VII. Agency Contacts

Programmatic questions regarding this SGA can be directed to: Mr. Greg Gross, Division of Indian and Native American Programs, Room S–5206 FPB ATTN: MIS Desk, U.S. Department of Labor, 200 Constitution Avenue, NW., Washington, DC 20210; e-mail: *gross.gregory@dol.gov*; 202–693–3752; FAX: 202–693–3818.

Grant and administrative questions can be directed to: Ms. Serena Boyd, Grants Management Specialist; e-mail: *boyd.serena@dol.gov*; 202–693–3338; FAX: 202–693–2879.

VIII. Other Information

Potential applicants may obtain further information on the WIA section 166 program for employment and training of Native Americans through the website for DOL's Division of Indian and Native American Programs: *http://wdsc.doleta.gov/dinap/*. Any information submitted in response to this SGA will be subject to the provisions of the Privacy Act and the Freedom of Information Act, as appropriate. The Department of Labor is not obligated to make any awards as a result of this SGA, and only the Grant Officer can bind the Department to the provision of funds under WIA section 166. Unless specifically provided in the grant agreement, DOL's acceptance of a proposal and/or award of Federal funds do not waive any grant requirements and/or procedures.

Signed at Washington, DC, this 22nd day of December, 2003.

Emily Stover DeRocco,

Assistant Secretary, Employment and Training Administration.

Exhibit A [1]

BILLING CODE 4510–30–P

[1] Exhibit A is available on the DINAP Web site at *http://wdsc.doleta.gov/dinap/*.

Exhibit B

APPLICATION FOR FEDERAL ASSISTANCE

Version 7/03

		2. DATE SUBMITTED	Applicant Identifier
1. TYPE OF SUBMISSION: Application ☐ **Construction** ☐ **Non-Construction**	Pre-application ☐ **Construction** ☐ **Non-Construction**	**3. DATE RECEIVED BY STATE**	State Application Identifier
		4. DATE RECEIVED BY FEDERAL AGENCY	Federal Identifier

5. APPLICANT INFORMATION

Legal Name:		**Organizational Unit:** Department:	
Organizational DUNS:		Division:	
Address: Street:		**Name and telephone number of person to be contacted on matters involving this application (give area code)** Prefix:	First Name:
City:		Middle Name	
County:		Last Name	
State:	Zip Code	Suffix:	
Country:		Email:	
6. EMPLOYER IDENTIFICATION NUMBER *(EIN):* ☐☐-☐☐☐☐☐☐☐		Phone Number (give area code)	Fax Number (give area code)
8. TYPE OF APPLICATION: ☐ **New** ☐ **Continuation** ☐ **Revision** If Revision, enter appropriate letter(s) in box(es) (See back of form for description of letters.) ☐ ☐ Other (specify)		**7. TYPE OF APPLICANT:** (See back of form for Application Types) Other (specify)	
		9. NAME OF FEDERAL AGENCY:	
10. CATALOG OF FEDERAL DOMESTIC ASSISTANCE NUMBER: ☐☐-☐☐☐ TITLE (Name of Program):		**11. DESCRIPTIVE TITLE OF APPLICANT'S PROJECT:**	
12. AREAS AFFECTED BY PROJECT *(Cities, Counties, States, etc.):*			
13. PROPOSED PROJECT Start Date:	Ending Date:	**14. CONGRESSIONAL DISTRICTS OF:** a. Applicant	b. Project
15. ESTIMATED FUNDING:		**16. IS APPLICATION SUBJECT TO REVIEW BY STATE EXECUTIVE ORDER 12372 PROCESS?**	
a. Federal	$ .00	a. Yes. ☐ THIS PREAPPLICATION/APPLICATION WAS MADE AVAILABLE TO THE STATE EXECUTIVE ORDER 12372 PROCESS FOR REVIEW ON DATE:	
b. Applicant	$ .00		
c. State	$ .00		
d. Local	$ .00	b. No. ☐ PROGRAM IS NOT COVERED BY E. O. 12372	
e. Other	$ .00	☐ OR PROGRAM HAS NOT BEEN SELECTED BY STATE FOR REVIEW	
f. Program Income	$ .00	**17. IS THE APPLICANT DELINQUENT ON ANY FEDERAL DEBT?**	
g. TOTAL	$ .00	☐ Yes If "Yes" attach an explanation. ☐ No	

18. TO THE BEST OF MY KNOWLEDGE AND BELIEF, ALL DATA IN THIS APPLICATION/PREAPPLICATION ARE TRUE AND CORRECT. THE DOCUMENT HAS BEEN DULY AUTHORIZED BY THE GOVERNING BODY OF THE APPLICANT AND THE APPLICANT WILL COMPLY WITH THE ATTACHED ASSURANCES IF THE ASSISTANCE IS AWARDED.

a. Authorized Representative		
Prefix	First Name	Middle Name
Last Name		Suffix
b. Title		c. Telephone Number (give area code)
d. Signature of Authorized Representative		e. Date Signed

Previous Edition Usable
Authorized for Local Reproduction

Standard Form 424 (Rev.9-2003)
Prescribed by OMB Circular A-102

INSTRUCTIONS FOR THE SF-424

Public reporting burden for this collection of information is estimated to average 45 minutes per response, including time for reviewing instructions, searching existing data sources, gathering and maintaining the data needed, and completing and reviewing the collection of information. Send comments regarding the burden estimate or any other aspect of this collection of information, including suggestions for reducing this burden, to the Office of Management and Budget, Paperwork Reduction Project (0348-0043), Washington, DC 20503.

PLEASE DO NOT RETURN YOUR COMPLETED FORM TO THE OFFICE OF MANAGEMENT AND BUDGET. SEND IT TO THE ADDRESS PROVIDED BY THE SPONSORING AGENCY.

This is a standard form used by applicants as a required face sheet for pre-applications and applications submitted for Federal assistance. It will be used by Federal agencies to obtain applicant certification that States which have established a review and comment procedure in response to Executive Order 12372 and have selected the program to be included in their process, have been given an opportunity to review the applicant's submission.

Item:	Entry:	Item:	Entry:
1.	Select Type of Submission.	11.	Enter a brief descriptive title of the project. If more than one program is involved, you should append an explanation on a separate sheet. If appropriate (e.g., construction or real property projects), attach a map showing project location. For preapplications, use a separate sheet to provide a summary description of this project.
2.	Date application submitted to Federal agency (or State if applicable) and applicant's control number (if applicable).	12.	List only the largest political entities affected (e.g., State, counties, cities).
3.	State use only (if applicable).	13	Enter the proposed start date and end date of the project.
4.	Enter Date Received by Federal Agency Federal identifier number: If this application is a continuation or revision to an existing award, enter the present Federal Identifier number. If for a new project, leave blank.	14.	List the applicant's Congressional District and any District(s) affected by the program or project
5.	Enter legal name of applicant, name of primary organizational unit (including division, if applicable), which will undertake the assistance activity, enter the organization's DUNS number (received from Dun and Bradstreet), enter the complete address of the applicant (including country), and name, telephone number, e-mail and fax of the person to contact on matters related to this application.	15	Amount requested or to be contributed during the first funding/budget period by each contributor. Value of in kind contributions should be included on appropriate lines as applicable. If the action will result in a dollar change to an existing award, indicate only the amount of the change. For decreases, enclose the amounts in parentheses. If both basic and supplemental amounts are included, show breakdown on an attached sheet. For multiple program funding, use totals and show breakdown using same categories as item 15.
6.	Enter Employer Identification Number (EIN) as assigned by the Internal Revenue Service.	16.	Applicants should contact the State Single Point of Contact (SPOC) for Federal Executive Order 12372 to determine whether the application is subject to the State intergovernmental review process.
7.	Select the appropriate letter in the space provided. A. State B. County C. Municipal D. Township E. Interstate F. Intermunicipal G. Special District H. Independent School District I. State Controlled Institution of Higher Learning J. Private University K. Indian Tribe L. Individual M. Profit Organization N. Other (Specify) O. Not for Profit Organization	17.	This question applies to the applicant organization, not the person who signs as the authorized representative. Categories of debt include delinquent audit disallowances, loans and taxes.
8.	Select the type from the following list: • "New" means a new assistance award. • "Continuation" means an extension for an additional funding/budget period for a project with a projected completion date. • "Revision" means any change in the Federal Government's financial obligation or contingent liability from an existing obligation. If a revision enter the appropriate letter: A. Increase Award B. Decrease Award C. Increase Duration D. Decrease Duration	18	To be signed by the authorized representative of the applicant. A copy of the governing body's authorization for you to sign this application as official representative must be on file in the applicant's office. (Certain Federal agencies may require that this authorization be submitted as part of the application.)
9.	Name of Federal agency from which assistance is being requested with this application.		
10.	Use the Catalog of Federal Domestic Assistance number and title of the program under which assistance is requested.		

[FR Doc. 03–32126 Filed 12–30–03; 8:45 am]

BILLING CODE 4510–30–C

NATIONAL INDIAN GAMING COMMISSION

Fee Rates

AGENCY: National Indian Gaming Commission.

ACTION: Notice.

SUMMARY: Notice is hereby given, pursuant to 25 CFR 514.1(a)(3), that the National Indian Gaming Commission has adopted final annual fee rates of 0.00% for tier 1 and 0.0635% (.000635) for tier 2 for calendar year 2003. These rates shall apply to all assessable gross revenues from each gaming operation under the jurisdiction of the Commission. If a tribe has a certificate of self-regulation under 25 CFR part 518, the final fee rate on class II revenues for calendar year 2003 shall be one-half of the annual fee rate, which is 0.03175% (.0003175).

FOR FURTHER INFORMATION CONTACT: Bobby Gordon, National Indian Gaming Commission, 1441 L Street, NW., Suite 9100, Washington, DC 20005; telephone 202/632–7003; fax 202/632–7066 (these are not toll-free numbers).

SUPPLEMENTARY INFORMATION: The Indian Gaming Regulatory Act established the National Indian Gaming Commission which is charged with, among other things, regulating gaming on Indian lands.

The regulations of the Commission (25 CFR part 514), as amended, provide for a system of fee assessment and payment that is self-administered by gaming operations. Pursuant to those regulations, the Commission is required to adopt and communicate assessment rates; the gaming operations are required to apply those rates to their revenues, compute the fees to be paid, report the revenues, and remit the fees to the Commission on a quarterly basis.

The regulations of the Commission and the final rate being adopted today are effective for calendar year 2003. Therefore, all gaming operations within the jurisdiction of the Commission are required to self-administer the provisions of these regulations and report and pay any fees that are due to the Commission by December 31, 2003.

Gary Pechota,

Chief of Staff, National Indian Gaming Commission.

[FR Doc. 03–32125 Filed 12–30–03; 8:45 am]

BILLING CODE 7565–01–M

NATIONAL LABOR RELATIONS BOARD

Submission for OMB Review; Comment Request

AGENCY: National Labor Relations Board.

ACTION: Notice.

The National Labor Relations Board (NLRB) has submitted to OMB for clearance, the following proposal for collection of information under provisions of section 3506(c)(2)(A) of the Paperwork Reduction Act of 1995.

Title and Form Number: Supplemental Statement Application for Professional Position in the Office of the General Counsel; NLRB 4560.

Type of Request: New Collection.

Number of Respondents: 500.

Responses per Respondent: 1.

Annual Responses: 500.

Average Burden per Response: .5 Hours.

Annual Burden Hours: 250 Hours.

Needs and Uses: This requirement provides the collection of information from applicants applying for professional positions within the Office of the General Counsel. NLRB will use the information as a standard format that will substantially reduce the number of hours currently expended to review applications received for the positions of Attorneys and Field Examiners in the office of the General Counsel.

Affected Public: Individuals or Households.

SUMMARY: The notice is being republished to provide an additional (30) day comment period. The original notice was published on June 27, 2003 (3 FR 16303).

The National Labor Relations Board (NLRB), Office of the General Counsel, in accordance with section 3506(c)(2)(A) of the Paperwork Reduction Act of 1995, plans to request approval for the use of NLRB Form 4560, Supplemental Statement Application for Professional Position in the Office of the General Counsel. Using this form will substantially reduce the number of hours currently expended to review applications received for the positions of attorneys and field examiners in the office of the General Counsel.

Currently, applications are received in various forms, *e.g.*, SF–171, OF–612, and resumes.

As a result, required information is not easily obtained and requested information necessary to the Agency's review may be missing altogether. By providing a standard format, all information necessary to the Agency's review would be addressed and in a consistent format that would facilitate and streamline that review.

Application forms, such as the SF–171 and OF–612, and resumes do not address a very important question that is included on the Supplemental Statement. Specifically, information concerning a candidate that would create an actual or apparent conflict of interest for assignment to a particular office because of a family and/or personal relationship with someone outside the NLRB who regularly does business with that particular NLRB office.

Receiving this information as part of the application package would prevent assignments to offices where these situations may exist.

DATES: Comments should be received on or before January 30, 2004.

ADDRESSES: Written comments and recommendations on the information collection should be sent to the National Labor Relations Board, Library and Administrative Services Branch, 1099 14th Street, NW., Washington, DC 20570–0001.

FOR FURTHER INFORMATION CONTACT: Tommie Gregg, Sr., Records Management and Anthony Wonkovich, Human Resources, at address shown above; by telephone at (202) 273–2833, (202) 237–3982; or by facsimile at (202) 273–4286.

SUPPLEMENTARY INFORMATION: Comment is requested on; (a) whether the proposed collection of information is necessary for the proper performance of the functions of the Agency, including, whether the information shall have practical utility; (b) the accuracy of the Agency's estimate of the burden of the information collection; (c) ways to enhance the quality, utility, and clarity of the information to be collected; and (d) ways to minimize the burden of the information collection on respondents, including through the use of automated collection techniques or other forms of information technology.

Dated: December 22, 2003.

By Direction of the Board.

Lester A. Heltzer,

Executive Secretary, National Labor Relations Board.

[FR Doc. 03–32127 Filed 12–30–03; 8:45 am]

BILLING CODE 7545–01–P

NATIONAL SCIENCE FOUNDATION

Notice of Intent To Seek Approval To Carry Out a New Information Collection

AGENCY: National Science Foundation.

ACTION: Notice and request for comments.

SUMMARY: The National Science Foundation (NSF) is announcing plans to request clearance of this collection. In accordance with the requirement of Section 3506(c)(2)(A) of the Paperwork Reduction Act of 1995 (Pub. L. 104–13), we are providing opportunity for public comment on this action. After obtaining and considering public comment, NSF will prepare the submission requesting that OMB approve clearance of this collection for no longer than 1 year.

DATES: Written comments on this notice must be received by March 1, 2004 to be assured of consideration. Comments received after that date will be considered to the extent practicable.

FOR FURTHER INFORMATION CONTACT: Suzanne H. Plimpton, Reports Clearance Officer, National Science Foundation, 4201 Wilson Boulevard, Suite 295, Arlington, Virginia 22230; telephone (703) 292–7556; or send email to *splimpto@nsf.gov.* Individuals who use a telecommunications device for the deaf (TDD) may call the Federal Information Relay Service (FIRS) at 1–800–877–8339 between 8 a.m. and 8 p.m., Eastern time, Monday through Friday. You also may obtain a copy of the data collection instrument and instructions from Ms. Plimpton.

SUPPLEMENTARY INFORMATION:

Title of Collection: Evaluation of NSF Support for Undergraduate Research Opportunities (URO).

OMB Number: 3145–NEW.

Expiration Date of Approval: Not applicable.

Type of Request: Intent to seek approval to carry out a new information collection for one year.

Abstract: Proposed Project: The Directorate for Engineering (ENG) initiated the Research Experiences for Teachers (RET) Supplements activity in FY 2001 to be add-ons to active awards funded by ENG programs. The intent was to build on the popular NSF-wide Research Experiences for Undergraduates (REU) Supplements activity by providing opportunities for K–12 teachers to conduct hands-on experiences in the laboratories/facilities of ENG-funded researchers interested in participating in RET. Typically the supplements supported one or two teachers. The assumption was that the teachers could also benefit from involvement in research and direct exposure to the scientific method and transfer what they learned into classroom activities. Since then, ENG has funded RET Site awards, which are similar to REU Sites in that NSF awards fund groups of teachers to work with faculty members at the same institution and to engage in group activities related to the research. In 2003, community college faculty became eligible as participants in RET awards.

This study of RET will include participants in RET Supplement and Site awards from 2001–2003 funded by the Division of Engineering Education and Centers, the Division of Bioengineering and Environmental Systems, and the Division of Design, Manufacture, and Industrial Innovation. The study will examine whether the scale and programmatic characteristics of the larger group awards, such as those funded as RET Sites, bring about different outcomes and impacts on the teachers and their subsequent instructional and professional activities, compared with those resulting from involvement in the typical small-scale RET Supplement. NSF wishes to know how RET experiences have affected participating teachers' subsequent teaching techniques and content modifications made as a result of teachers' RET activities. In addition, outcomes and impacts beyond the teachers' own classrooms from the research experiences, *e.g.,* follow-up knowledge transfer activities, any formal partnerships formed between the awardee and the teachers' school system/district, or community college, etc. should also be examined. The collection will be done on the World Wide Web.

Estimate of Burden: Public reporting burden for this collection of information is estimated to average 40 minutes per response.

Respondents: Individuals.

Estimated Number of Responses per Form: 645.

Estimated Total Annual Burden on Respondents: 430 hours—645 respondents at 40 minutes per response.

Frequency of Response: One time.

Comments

Comments are invited on (a) whether the proposed collection of information is necessary for the proper performance of the functions of the Agency, including whether the information shall have practical utility; (b) the accuracy of the Agency's estimate of the burden of the proposed collection of information; (c) ways to enhance the quality, utility, and clarity of the information on respondents, including through the use of automated collection techniques or other forms of information technology; and (d) ways to minimize the burden of the collection of information on those who are to respond, including through the use of appropriate automated, electronic, mechanical, or other technological collection techniques or other forms of information technology.

Dated: December 24, 2003.

Suzanne H. Plimpton,

Reports Clearance Officer, National Science Foundation.

[FR Doc. 03–32187 Filed 12–30–03; 8:45 am]

BILLING CODE 7555–01–M

NUCLEAR REGULATORY COMMISSION

[Docket: 030–19913]

Notice of Availability of Environmental Assessment and Finding of No Significant Impact for License Amendment for Enviro-Test Laboratories, Casper, WY

AGENCY: Nuclear Regulatory Commission (NRC).

ACTION: Notice of Environmental Assessment and Finding of No Significant Impact.

FOR FURTHER INFORMATION CONTACT: Robert J. Evans, Senior Health Physicist, Fuel Cycle and Decommissioning Branch, Division of Nuclear Materials Safety, Region IV Office, U.S. Nuclear Regulatory Commission, Arlington, Texas 76011. Telephone: (817) 860–8234; fax number: (817) 860–8188; e-mail *rje@nrc.gov.*

SUPPLEMENTARY INFORMATION:

I. Introduction

The U.S. Nuclear Regulatory Commission (NRC) is considering the approval of Enviro-Test Laboratories' (the licensee's) decommissioning plan for its former laboratory facility located in Casper, Wyoming, and terminating NRC Materials License 49–21194–01. Enviro-Test Laboratories (the licensee) submitted a decommissioning plan (DP) to the U.S. Nuclear Regulatory Commission (NRC) by letter dated October 1, 2002. The licensee subsequently submitted supplemental information by letters dated June 2 and July 18, 2003. The licensee's request for the proposed action was previously noticed in the **Federal Register** on June 24, 2003 (68 FR 37572), with a notice of an opportunity to request a hearing and an opportunity to provide comments on the action and its environmental impacts. No requests for hearing or comments were received.

The licensee requested that its former laboratory in Casper, Wyoming, be released for unrestricted use. The NRC has prepared an Environmental Assessment (EA) in support of these actions in accordance with the

requirements in 10 CFR Part 51. Based on the EA, the NRC has concluded that a Finding of No Significant Impact (FONSI) is appropriate. The amendment will be issued following publication of this notice.

II. Environmental Assessment

A. Proposed Action

The proposed action is to release for unrestricted use the former laboratory located in Casper, Wyoming. This would be accomplished by license amendment to terminate NRC Materials License 49–21194–01 upon NRC approval that the site meets its standards for unrestricted release as specified in 10 CFR part 20.

B. Need for Proposed Action

The licensee needs to have the site removed from its license because it no longer plans to conduct NRC-licensed activities at this location. Further, if the amendment request is approved, the licensee would then be in compliance with the Timeliness Rule requirements of 10 CFR 30.36, ''Expiration and Termination of Licenses and Decommissioning of Sites and Separate Buildings or Outdoor Areas.''

C. Facility Description/History

Chemical and Geological Laboratories, the original licensee, received NRC Materials License 49–21194–01 during February 1983. Core Laboratories became the licensee during July 1987 followed by Enviro-Test Laboratories during November 2000. Amendment 6 dated August 26, 2003, authorizes Enviro-Test Laboratories to possess small quantities of tritium, byproduct material, special nuclear material, and uranium mill tailings at its Casper, Wyoming, facility. The authorized uses included environmental and bioassay sampling, possession of laboratory standards and calibration sources, and evaluation of sealed source leak tests.

The licensee also conducted tests of non-radiological samples. According to information provided by the licensee, the laboratory was used for a broad range of analytical tests for metals, inorganic water parameters, organics, and petroleum products. There was also a coal analysis lab in part of the facility for a period of time. The licensee possessed and used a wide range of chemicals and standards to support these analytical tests.

The licensee halted operations in July 2002 and subsequently initiated decommissioning activities, which they completed in October 2002. Enviro-Test Laboratories submitted a DP to the NRC by letter dated October 1, 2002. The licensee submitted supplemental DP information by letters dated June 2 and July 18, 2003. In addition, the licensee submitted an NRC Form 314, ''Certificate of Disposition of Materials,'' dated January 31, 2003, requesting termination of its radioactive materials license following the NRC's release of the property for unrestricted use.

The laboratory is located at 420 West First Street in Casper, Wyoming. The legal description of the property is: Lots 26–34 inclusive, Block 7, Midwest Addition to the City of Casper.

D. Radiological Status

The licensee possessed small quantities of numerous radionuclides in both sealed and unsealed form. The licensee possessed about 30 alpha-emitting radionuclides and 49 beta-gamma emitting radionuclides at time of closure. The predominant alpha-emitting radionuclide was thorium-230 based on the total radioactivity in the licensee's inventory. The licensee calculated that 49 percent of the total alpha activity was a result of thorium-230. The predominant beta-gamma emitting radionuclide was strontium-90 at 43.4 percent.

As part of the decommissioning process, the licensee disposed or transferred all remaining radioactive material. Some of the radioactive calibration standards and sources were transferred to one of three NRC or state licensed laboratories. The remainder of the radioactive material was drummed for disposal at a commercial low-level waste disposal facility.

The licensee submitted final status survey information to the NRC in its initial DP submittal dated October 1, 2002. The licensee's final status survey consisted of fixed (total surface) contamination surveys, removable contamination surveys, ambient gamma exposure rate measurements, and limited soil and water sampling.

The NRC conducted a confirmatory radiological survey of the laboratory during June 17–18, 2003. The NRC determined that the former soil preparation room required additional remediation. In response to the NRC's findings, the licensee conducted additional decommissioning activities during early July 2003. Additional final status survey information was provided in the licensee's third DP submittal dated July 18, 2003. The NRC conducted a second confirmatory survey on August 5, 2003. The results of the two NRC confirmatory surveys are provided in NRC Inspection Report 030–19913/2003–01. A detailed analysis of the licensee's final status survey report and the NRC's confirmatory survey will be included in the NRC's Safety Evaluation Report that will be used to support the termination of the license.

E. Alternatives

The licensee seeks NRC approval of a license amendment request as submitted. The alternative available to the NRC to the proposed action is to take no action by denying the amendment request. The no-action alternative is not a feasible alternative because it will result in violation of NRC's Timeliness Rule (10 CFR 30.36), which requires licensees to decommission their facilities when licensed activities cease, and to request termination of their radioactive materials license. One potential impact from the no action alternative would be to restrict potential benefits from future uses of the site. Based on the analysis in this EA, which demonstrates that the licensee has met the license termination requirements in 10 CFR 20.1402, and NRC's statutory mission to protect public health and safety, the NRC has determined the no-action alternative is not reasonable. Therefore, the no-action alternative is eliminated from further consideration in this EA.

F. Affected Environment

The laboratory was a 14,000-square foot (1301-square meter) facility comprised of three original buildings that had been connected in various remodeling projects over the past 20 years. The affected environment for the Proposed Action (NRC approval of the license amendment request) would be the interior of the building and the immediate vicinity of the building.

The former laboratory building is located in an industrial/commercial area of Casper with no residences immediately adjacent to the site. There are no streams or ponds on site property, although the North Platte River is located about 200 meters from the site property. Since the site is located within the city limits of Casper, municipal water is supplied to the former laboratory and nearby businesses.

G. Environmental Impacts

1. Occupational and Public Health Impacts

Proposed Action. The radiological criteria for unrestricted use is provided in 10 CFR 20.1402. This regulation states that a site will be considered acceptable for unrestricted use if the residual radioactivity that is distinguishable from background radiation results in a total effective dose equivalent to an average member of the

public that does not exceed 25 millirems (0.25 mSv) per year, including that from groundwater sources of drinking water, and that the residual radioactivity has been reduced to levels that are as low as reasonably achievable (ALARA).

Current NRC guidance (Section 2.5 of NUREG–1757, Volume 2, ''Consolidated NMSS Decommissioning Guidance'') recommends that licensees demonstrate compliance with the dose criteria by using dose modeling or derived concentration guideline levels (DCGLs) and final status survey results. The licensee's request to release the site for unrestricted use is based, in part, on dose modeling calculations conducted using the NRC-approved DandD and RESRAD computer codes. The licensee used the DandD code (Version 2.1.0) to model the annual dose to members of the public inside of the building. The licensee also used the RESRAD computer code (Version 6.21) to model the annual dose to members of the public outside of the building. The code inputs included information obtained during the licensee's performance of the final radiological status survey, *i.e.*, measured radioactivity at the site. The code outputs were then compared to the 25-millirem dose criteria.

Using the DandD building occupancy scenario, the licensee conducted two analyses, one for all alpha-emitting radionuclides and the second for all beta-emitting radionuclides. The licensee used DandD's default parameters for both analyses. The licensee prorated the radionuclides based on the total activity in inventory at the time of facility closure. The licensee used 29 alpha-emitting radionuclides in the first analysis and 50 beta-gamma emitting radionuclides (including yttrium-90) in the second analysis. The calculated total dose from all pathways was 9.88 millirems for alpha-emitting radionuclides and 12.4 millirems for beta-gamma emitting radionuclides. The combined total of the two analyses was 22.28 millirems per year, a dose that is below the 25-millirem limit.

The licensee also conducted an analysis using RESRAD for radionuclides that may be in the soil in the vicinity of the building. The licensee sampled the soil and determined that the soil contained measurable amounts of uranium, thorium, and radium. The inputs into RESRAD included radium-228 and thorium-232 because the licensee could not determine a background concentration for these radionuclides. The licensee did not include uranium and radium-226 in the RESRAD program because sample analyses indicated that these two radionuclides were at or below background levels. The licensee used the default RESRAD program parameters. The calculated maximum dose was 15.08 millirems per year, a dose rate below the 25-millirem per year limit. [Since DandD and RESRAD have different occupancy factors, it is not appropriate to add the building occupancy results and outdoor exposure results together. The DandD and RESRAD results are individually compared to the 25-millirem limit.]

During a portion of laboratory decommissioning, the licensee monitored worker exposures to radioactive materials. Occupational exposure records were reviewed during the June 2003 inspection (NRC Inspection Report 030–19913/2003–001). As noted in the Inspection Report, records for 2002 (the time frame when decommissioning was conducted) were not always available. The NRC staff believes, based on exposure and environmental records for 1998–2001, that worker exposure to radioactive materials was most likely well below the NRC's annual total effective dose equivalent limit during decommissioning activities.

In summary, the licensee's final status survey results indicate that annual doses to occupants of the building and annual doses to members of the public located outdoors will be less than the NRC's radiological criteria for unrestricted use of the facility. Since the licensee used the default values for both computer codes, then the calculated results are considered conservative. No cumulative impacts or impacts of a non-radiological nature were identified in connection with the proposed action.

2. Environmental Resource Impacts

Proposed Action. The licensee conducted studies to demonstrate that the area around and under the former laboratory had not been contaminated with radioactive material. The licensee collected soil samples from around the building for analysis. The sample results revealed detectable amounts of radioactive lead, radium, thorium, and uranium at or near background levels. These sample results could be representative of naturally occurring radionuclides in the soil. No man-made gamma emitting radionuclides were identified, including cobalt-60 and cesium-137. In summary, the soil sample results suggest that all radionuclides were undetectable or were at naturally occurring background levels.

The licensee conducted a study to determine if there had been any contamination of soil or groundwater as a result of a leaking sump that was repaired during 1996. The study was conducted prior to start of decommissioning but was included in the DP submittal. The sample results identified radioactivity at background levels. The study concluded that the sump had not leaked detectable quantities of licensed radioactive material into the environs of the site.

The property owner (not the same entity as the licensee) conducted sampling of the former sump during September 2001. During drilling operations, groundwater was encountered at approximately 10.5 feet below the surface. The data presented in the owner's TriHydro Corporation report dated November 29, 2001, indicated that soils in the area of the sump did not display elevated concentrations of any constituent, except non-radioactive mercury which is not regulated by the NRC. The report documents that mercury was identified in the 0–4 foot sample at 95.6 mg/kg. The State of Wyoming's residential soil cleanup level is 23 mg/kg for mercury. The NRC does not have the regulatory authority to address the report of mercury contamination. As such, notification to the State of Wyoming was made by letter dated November 4, 2003. If the proposed action is implemented, any existing mercury in site soils would be part of the property that is released from NRC's license conditions.

Current regulations allow licensees to dispose of radioactive material through the sanitary sewer system as long as the concentration limits provided in 10 CFR Part 20, Appendix B, Table 3, ''Release to Sewers,'' are not exceeded. The NRC conducted routine inspections of the facility, and waste disposal records were reviewed during these inspections. The NRC inspectors did not identify any violations of this regulation, suggesting that the licensee's waste disposal practices were in accordance with license and regulatory requirements.

During the confirmatory survey of the laboratory, the NRC inspector surveyed the exterior of the building for ambient gamma exposure rates and sampled for total (fixed and removable) contamination at selected exterior surfaces. The only area that exhibited an elevated gamma exposure rate was a ventilation duct that exited the building from the former soil preparation room. This room was subsequently remediated a second time by the licensee. No other area, including adjacent land areas, exhibited elevated gamma exposure rates. In addition, no exterior surface contamination sample exhibited an

elevated level of radioactivity. The NRC's confirmatory survey confirmed that the building exterior and the grounds around the building were not contaminated with radioactive material.

Other than the presence of mercury in the former sump area in the rear of the building as discussed previously, no impacts of a non-radiological nature were identified in connection with the proposed action. No cumulative impacts were identified.

H. Agencies and Persons Consulted and Sources Used

The NRC staff have determined that the proposed action will not affect listed species or critical habitat. Therefore, no further consultation is required under Section 7 of the Endangered Species Act. Likewise, NRC staff have determined that the proposed action is not the type of activity that has the potential to cause effects on historic properties. Therefore, no further consultation is required under Section 106 of the National Historic Preservation Act.

The NRC consulted with the State of Wyoming on this EA. The State provided one comment regarding verification of waste disposal. The licensee subsequently provided documentation from the waste broker dated January 3, 2003, confirming that the radioactive wastes had been disposed in a state-licensed commercial waste facility in Richland, Washington.

I. Conclusion

Based on its review, the NRC staff has concluded that the environmental impacts associated with the proposed action do not warrant denial of the license amendment request. The NRC staff believes that the proposed action will result in minimal environmental impacts. The staff has determined that the proposed action, approval of the license amendment request to release the facility for unrestricted use, is the appropriate alternative for selection.

J. List of Preparers

This Environmental Assessment was prepared by Robert Evans, Senior Health Physicist, Fuel Cycle & Decommissioning Branch, Division of Nuclear Materials Safety, Region IV, and reviewed by Dr. D. Blair Spitzberg, Chief, Fuel Cycle & Decommissioning Branch.

K. References

1. Enviro-Test Laboratories' Decommissioning Plan submittal dated October 1, 2002 (ML023190414, ML023190459, ML023190486, ML023190490, ML023190561, ML023220067, ML023220319, and ML023220321; restricted access due to personal privacy information being included).

2. NRC letter to Enviro-Test Laboratories dated January 28, 2003, Completeness Review of Decommissioning Plan (ML030280684).

3. Enviro-Test Laboratories' Certificate of Disposition of Materials dated January 31, 2003 (ML031750843).

4. Enviro-Test Laboratories' second Decommissioning Plan submittal dated June 2, 2003, Additional Information for Decommissioning Activities (ML031550560, ML031550604, ML031550624, and ML031550645).

5. NRC letter to Enviro-Test Laboratories dated June 11, 2003, Acknowledgment of Receipt of Decommissioning Plan (ML031621024).

6. NRC Notice of Consideration of Amendment Request for Enviro-Test Laboratories dated June 16, 2003 (ML031671353).

7. Enviro-Test Laboratories' third Decommissioning Plan submittal dated July 18, 2003, Site Closure Plan (ML032030605, ML032030619, ML032030621, ML032030623, ML032050081, and ML032050108).

8. Oak Ridge Institute for Science and Education letter to NRC dated August 6, 2003, Revision to Analytical Results for Smear Results (ML032650667).

9. NRC Inspection Report 030–19913/2003–01 dated September 24, 2003 (ML032671377).

10. TriHydro Corporation Report to Gene George dated November 29, 2001 (ML033070386).

11. State of Wyoming, Office of Homeland Security, letter to NRC dated November 17, 2003, RE: Request for Comments Regarding the Environmental Assessment for Decommissioning of the Enviro-Test Laboratories Facility dated November 4, 2003 (ML033280170).

12. Environmental Management and Controls, Inc. letter to Enviro-Test Laboratories dated January 3, 2003, regarding disposal of radioactive wastes (ML033420169).

III. Finding of No Significant Impact

Based on the environmental assessment, the staff concludes that the proposed action will not have a significant effect on the quality of the human environment. Accordingly, the staff has determined that preparation of an environmental impact statement is not warranted.

IV. Further Information

The documents related to this proposed action, including the application for the license amendment and supporting documentation, are available for inspection at NRC's Public Electronic Reading Room at *http://www.nrc.gov/reading-rm/adams.html,* at the ADAMS Accession Nos. listed with the documents. These documents may also be viewed electronically on the public computers located at the NRC's Public Document Room (PDR), O 1 F21, One White Flint North, 11555 Rockville Pike, Rockville, MD 20852. The PDR reproduction contractor will copy documents for a fee.

Dated at Arlington, Texas, this 15th day of December, 2003.

For the Nuclear Regulatory Commission.

D. Blair Spitzberg,

Chief, Fuel Cycle Decommissioning Branch, Division of Nuclear Materials Safety Region IV.

[FR Doc. 03–32146 Filed 12–30–03; 8:45 am]

BILLING CODE 7590–01–P

NUCLEAR REGULATORY COMMISSION

[Docket No. 52–009]

System Energy Resources, Inc., Grand Gulf Site; Notice of Intent To Prepare an Environmental Impact Statement and Conduct Scoping Process

System Energy Resources, Inc. (SERI) has submitted an application for an early site permit (ESP) for its Grand Gulf site, located in Claiborne County, near Port Gibson, Mississippi. The application for the ESP was submitted by letter dated October 16, 2003, pursuant to 10 CFR part 52. A notice of receipt of application, including the environmental report (ER), was published in the **Federal Register** on November 14, 2003 (68 FR 64665). A notice of acceptance for docketing of the application for an early site permit for Grand Gulf was published in the **Federal Register** on December 1, 2003 (68 FR 67219). The purpose of this notice is to inform the public that the U.S. Nuclear Regulatory Commission (NRC) will be preparing an environmental impact statement (EIS) in support of the review of the ESP application and to provide the public with an opportunity to participate in the environmental scoping process as defined in 10 CFR 51.29. In addition, as outlined in 36 CFR 800.8, ''Coordination with the National Environmental Policy Act,'' the NRC plans to coordinate compliance with Section 106 of the National Historic Preservation Act in meeting the requirements of the National Environmental Policy Act of 1969 (NEPA).

In accordance with 10 CFR 52.17(a)(2), 51.45 and 51.50, SERI submitted the ER as part of the application. The ER was prepared pursuant to 10 CFR parts 51 and 52 and is available for public inspection at the NRC Public Document Room (PDR) located at One White Flint North, 11555 Rockville Pike (first floor), Rockville, Maryland 20852, or from the Publicly Available Records component of NRC's Agencywide Documents Access and Management System (ADAMS). ADAMS

is accessible at *http://www.nrc.gov/reading-rm/adams.html*, which provides access through the NRC's Public Electronic Reading Room (PERR) link. Persons who do not have access to ADAMS, or who encounter problems in accessing the documents located in ADAMS, should contact the NRC's PDR Reference staff at 1–800–397–4209, or 301–415–4737, or by e-mail to *pdr@nrc.gov*. The application may also be viewed on the Internet at *http://www.nrc.gov/reactors/new-licensing/license-reviews/esp/grand-gulf.html*. In addition, the Harriette Person Memorial County Library, located at 606 Main Street, Port Gibson, Mississippi 39150, has agreed to make the ER available for public inspection.

The following key reference documents related to the ESP applications and the NRC staff's review process are available through the NRC's web site at *www.nrc.gov*:

a. 10 CFR part 51, Environmental protection regulations for domestic licensing and related regulatory functions.

b. 10 CFR part 52, Early site permits; standard design certifications; and combined licenses for nuclear power plants.

c. 10 CFR part 100, Reactor site criteria.

d. NUREG–1555, Standard Review Plans for Environmental Reviews for Nuclear Power Plants.

e. NUREG/BR–0298, Brochure on Nuclear Power Plant Licensing Process.

f. Regulatory Guide 4.2, Preparation of Environmental Reports for Nuclear Power Stations.

g. Regulatory Guide 4.7, General Site Suitability Criteria for Nuclear Power Stations.

h. Fact Sheet on Nuclear Power Plant Licensing Process.

i. Draft review Standard RS–002, Processing Applications for Early Site Permits.

j. NRR Office Instruction LIC–203, Procedural Guidance for Preparing Environmental Assessments and Considering Environmental Issues.

The regulations, NUREG-series documents, regulatory guide(s), and fact sheet can be found under Document Collections in the Electronic Reading Room on the NRC web page. The draft review standard is at *http://www.nrc.gov/reactors/new-licensing/license-reviews/esp/esp-public-comments-rs-002.html*. Finally, Office Instruction LIC–203 can be found in ADAMS in two parts under accession numbers ML011710073 (main text) and ML011780314 (charts and figures).

This notice advises the public that the NRC intends to gather the information necessary to prepare an EIS in support of the review of the application an ESP for the Grand Gulf site. Possible alternatives to the proposed action (issuance of the ESP at the Grand Gulf ESP site) include no action and alternative sites. The NRC is required by 10 CFR 52.18 to prepare an EIS in connection with the issuance of an ESP. This notice is being published in accordance with NEPA and the NRC's regulations found in 10 CFR part 51.

The NRC will first conduct a scoping process for the EIS and, as soon as practicable thereafter, will prepare a draft EIS for public comment. Participation in this scoping process by members of the public and local, State, Tribal, and Federal government agencies is encouraged. The scoping process for the draft EIS will be used to accomplish the following:

a. Define the proposed action which is to be the subject of EIS.

b. Determine the scope of the EIS and identify the significant issues to be analyzed in depth.

c. Identify and eliminate from detailed study those issues that are peripheral or that are not significant.

d. Identify any environmental assessments and other environmental impact statements (EISs) that are being or will be prepared that are related to but are not part of the scope of the EIS being considered.

e. Identify other environmental review and consultation requirements related to the proposed action.

f. Indicate the relationship between the timing of the preparation of environmental analyses and the Commission's tentative planning and decision-making schedule.

g. Identify any cooperating agencies and, as appropriate, allocate assignments for preparation and schedules for completing the EIS to the NRC and any cooperating agencies.

h. Describe how the EIS will be prepared, including any contractor assistance to be used.

The NRC invites the following entities to participate in the scoping process:

a. The applicant, SERI.

b. Any Federal agency that has jurisdiction by law or special expertise with respect to any environmental impact involved, or that is authorized to develop and enforce relevant environmental standards.

c. Affected State and local government agencies, including those authorized to develop and enforce relevant environmental standards including the State Historic Preservation Officer.

d. Any affected Indian tribe including the Tribal Historic Preservation Officer.

e. The Advisory Council on Historic Preservation.

f. Any person who requests or has requested an opportunity to participate in the scoping process.

g. Any person who intends to petition for leave to intervene.

In accordance with 10 CFR 51.26, the scoping process for an EIS may include a public scoping meeting to help identify significant issues related to a proposed activity and to determine the scope of issues to be addressed in an EIS. The NRC will hold a public meeting for the Grand Gulf early site permit application EIS. The scoping meeting will be held in the Port Gibson City Hall, located at 1005 College Street, Port Gibson, Mississippi, on Wednesday, January 21, 2004. The meeting will convene at 7 p.m. until 10 p.m., as necessary. The meeting will be transcribed and will include the following: (1) An overview by the NRC staff of the NEPA environmental review process, the proposed scope of the EIS, and the proposed review schedule; (2) an overview by SERI of the proposed action, Grand Gulf ESP, and the environmental impacts as outlined in the ER; and (3) the opportunity for interested Government agencies, organizations, and individuals to submit comments or suggestions on the environmental issues or the proposed scope of the EIS. Additionally, the NRC staff will host informal discussions one hour prior to the start of each session at the Port Gibson City Hall. No formal comments on the proposed scope of the EIS will be accepted during the informal discussions. To be considered, comments must be provided either at the transcribed public meeting or in writing, as discussed below. Persons may register to attend or present oral comments at the meeting on the NEPA scoping process by contacting Ms. Cristina Guerrero by telephone at 1 (800) 368–5642, extension 2981, or by Internet to the NRC at *GrandGulf@nrc.gov* no later than January 14, 2004. Members of the public may also register to speak at the meeting within 15 minutes of the start of each session. Individual oral comments may be limited by the time available, depending on the number of persons who register. Members of the public who have not registered may also have an opportunity to speak, if time permits. Public comments will be considered in the scoping process for the EIS. If special equipment or accommodations are needed to attend or present information at the public meeting, the need should be brought to Ms. Guerrero's attention no later than January 14, 2004, so that the NRC staff

can determine whether the request can be accommodated.

Members of the public may send written comments on the environmental scoping process for the EIS to the Chief, Rules and Directives Branch, Division of Administrative Services, Office of Administration, Mailstop T–6D59, U.S. Nuclear Regulatory Commission, Washington, DC 20555–0001, and should cite the publication date and page number of this **Federal Register** notice. Comments may be hand-delivered to the NRC at 11545 Rockville Pike, Rockville, Maryland, between 7:30 a.m. and 4:15 p.m. on Federal workdays. To be considered in the scoping process, written comments should be postmarked by February 12, 2004. Electronic comments may be sent by the Internet to the NRC at GrandGulfEIS@nrc.gov. Electronic submissions should be sent no later than February 12, 2004, to be considered in the scoping process. Comments will be available electronically and accessible through the NRC's Public Electronic Reading Room (PERR) link *http://www.nrc.gov/nrc.gov/reading-rm/adams.html* at the NRC Homepage.

Participation in the scoping process for the EIS does not entitle participants to become parties to the proceeding to which the EIS relates. Notice of a hearing regarding the application for an ESP will be the subject of a future **Federal Register** notice.

At the conclusion of the scoping process, the NRC will prepare a concise summary of the determination and conclusions reached, including the significant issues identified, and will send a copy of the summary to each participant in the scoping process. The summary will also be available for inspection through the PERR link. The staff will then prepare and issue for comment the draft EIS, which will be the subject of separate notices and a separate public meeting. Copies will be available for public inspection at the above-mentioned addresses, and one copy per request will be provided free of charge. After receipt and consideration of the comments, the NRC will prepare a final EIS, which will also be available for public inspection.

Information about the proposed action, the EIS, and the scoping process may be obtained from Mr. Wilson at the aforementioned telephone number or e-mail address.

Dated at Rockville, Maryland, this 23rd day of December 2003.

For the Nuclear Regulatory Commission.

Pao-Tsin Kuo,

Program Director, License Renewal and Environmental Impacts, Division of Regulatory Improvements Program, Office of Nuclear Reactor Regulation.

[FR Doc. 03–32147 Filed 12–30–03; 8:45 am]

BILLING CODE 7590–01–P

NUCLEAR REGULATORY COMMISSION

Sunshine Act Meeting

AGENCY: Nuclear Regulatory Commission.

DATES: Weeks of December 29, 2003, January 5, 12, 19, 26, February 2, 2004.

PLACE: Commissioner's Conference Room, 11555 Rockville Pike, Rockville, Maryland.

STATUS: Public and Closed.

MATTERS TO BE CONSIDERED:

Week of December 29, 2003

There are no meetings scheduled for the Week of December 29, 2003.

Week of January 5, 2004—Tentative

There are no meetings scheduled for the Week of January 5, 2004.

Week of January 12, 2004—Tentative

Wednesday, January 14, 2004

9:30 a.m. Briefing on Status of Office of Chief Information Officer Programs, Performance, and Plans (Public Meeting) (Contact: Jacqueline Silber, 301–415–7330).

This meeting will be Webcast live at the Web address—*http://www.nrc.gov.*

Week of January 19, 2004—Tentative

Wednesday, January 21, 2004

1:30 p.m. Discussion of Security Issues (Closed—Ex. 1).

Week of January 26, 2004—Tentative

There are no meetings scheduled for the Week of January 26, 2004.

Week of February 2, 2004—Tentative

Tuesday, February 3, 2004

9:30 a.m. Discussion of Security Issues (Closed—Ex. 1)

* The schedule for Commission meetings is subject to change on short notice. To verify the status of meetings call (recording)—(301) 415–1292. Contact person for more information: Timothy J. Frye, (301) 415–1651

* * * * *

The NRC Commission Meeting Schedule can be found on the Internet at *http://www.nrc.gov/what-we-do-/policy-making/schedule.html*

* * * * *

This notice is distributed by mail to several hundred subscribers; if you no longer wish to receive it, or would like to be added to the distribution, please contact the Office of the Secretary, Washington, DC 20555 (301–415–1969). In addition, distribution of this meeting notice over the Internet system is available. If you are interested in receiving this Commission meeting schedule electronically, please send an electronic message to *dkw@nrc.gov.*

Dated: December 23, 2003.

Timothy J. Frye,

Technical Coordinator, Office of the Secretary.

[FR Doc. 03–32251 Filed 12–29–03; 10:06 am]

BILLING CODE 7590–01–M

PEACE CORPS

Proposed Information Collection Requests

AGENCY: Peace Corps.

ACTION: Notice of public use form review request submission to the Offices of Management and Budget (OMB Control Number 0420–0510).

SUMMARY: Pursuant to the Paperwork Reduction Act of 1981 (44 U.S.C. chapter 35), the Peace Corps has submitted to the Office of Management and Budget (OMB) a request for approval of an information collection, OMB Control Number 0420–0510, the Peace Corps Health Status Review form (PC–1789) and the Report of Medical and Dental Exam forms (PC–1790 S and PC–1790 Dental). This is a renewal of an active information collection and a revision. The current active renewal covers the Peace Corps Health Status Review form (PC–1789) and the Report of Medical Exam (PC–1790 S). The revision is to add an HIV Aids question to the PC–1789 form and to add the Report of Dental Exam form (PC–1790) to this collection for a total of three forms to make up the health applications for Peace Corps Volunteers. The purpose of this information collection is necessary to ensure that Volunteers meet this medical eligibility requirement, all applicants for service must undergo physical and dental examination prior to Volunteer service to provide the information needed for clearance, and to serve as a reference for any future Volunteer medical clearance, and to serve as a reference for any future Volunteer disability claims. The Health Status Review is used to review the medical history of individual applicants; the Report of Medical Exam and the Report of Dental Exam are used

by the examining physician and dentist both for applicants and for currently serving Volunteers. The results of these examinations are used to ensure that applicants for Volunteer service will, with reasonable accommodation, be able to serve in the Peace Corps without jeopardizing their health.

The purpose of this notice is to allow for public comment on whether the proposed collection of information is necessary for the proper performance of the functions of the Peace Corps, including whether their information will have practical use; the accuracy of the agency's estimate of the burden of the proposed collection of information, including the validity of the methodology and assumptions used; ways to enhance the quality, utility and the clarity of the information to be collected; and, ways to minimize the burden of the collection of information on those who are to respond, including through the use of automated collection techniques, when appropriate, and other forms of information technology.

A copy of the information collection may be obtained from the Office of Management and Budget, Desk Officer for the Peace Corps, Mr. David Rostker by e-mail at *David_Rostker@omb.eop.gov.* Comments on the form should also be addressed to the attention of Mr. Rostker, *David Rostker@omb.eop.gov* and should be received on or before January 30, 2004.

Information Collection Abstract

Title: The Peace Corps Health Status review form (PC–1789) and the Report of Medical and Dental Exam forms (PC–1790 S and PC–1790 Dental).

Need for and use of this information: The Health Status Review is used to review the medical history of individual applicants; the Report of Medical Exam and the Report of Dental Exam are used by the examining physician and dentist both for applicants and for currently serving Volunteers. The results of these examinations are used to ensure that applicants for Volunteer service will, with reasonable accommodation, be able to serve in the Peace Corps without jeopardizing their health.

Respondents: Potential and current Volunteers.

Respondents's Obligation To Reply: Voluntary.

Burden on the Public:

	PC–1789 Health status review	PC–1790 S report of medical exam	PC–1790 dental report of dental exam
a. Estimated number of respondents	9,700	6,000	6,000.
b. Estimated average burden per response	45 minutes	30 minutes	30 minutes.
c. Frequency of response	one time	one time	one time.
d. Annual reporting burden	7,275 hours	3,000 hours	3,000 hours.
e. Estimated annual cost to respondents	$138,298	$57,030	$57,030.

This notice is issued in Washington, DC on December 23, 2003.

Ed Anderson,

Chief Information Officer.

[FR Doc. 03–32152 Filed 12–30–03; 8:45 am]

BILLING CODE 6051–01–M

OFFICE OF PERSONNEL MANAGEMENT

Federal Prevailing Rate Advisory Committee; Open Committee Meetings

According to the provisions of section 10 of the Federal Advisory Committee Act (Pub. L. 92–463), notice is hereby given that meetings of the Federal Prevailing Rate Advisory Committee will be held on Thursday, January 15, 2004; Thursday, January 29, 2004; Thursday, February 12, 2004; and Thursday, February 26, 2004.

The meetings will start at 10 a.m. and will be held in Room 5A06A, Office of Personnel Management Building, 1900 E Street, NW., Washington, DC.

The Federal Prevailing Rate Advisory Committee is composed of a Chair, five representatives from labor unions holding exclusive bargaining rights for Federal blue-collar employees, and five representatives from Federal agencies. Entitlement to membership on the Committee is provided for in 5 U.S.C. 5347.

The Committee's primary responsibility is to review the Prevailing Rate System and other matters pertinent to establishing prevailing rates under subchapter IV, chapter 53, 5 U.S.C., as amended, and from time to time advise the Office of Personnel Management.

This scheduled meeting will start in open session with both labor and management representatives attending. During the meeting either the labor members or the management members may caucus separately with the Chair to devise strategy and formulate positions. Premature disclosure of the matters discussed in these caucuses would unacceptably impair the ability of the Committee to reach a consensus on the matters being considered and would disrupt substantially the disposition of its business. Therefore, these caucuses will be closed to the public because of a determination made by the Director of the Office of Personnel Management under the provisions of section 10(d) of the Federal Advisory Committee Act (Pub. L. 92–463) and 5 U.S.C. 552b(c)(9)(B). These caucuses may, depending on the issues involved, constitute a substantial portion of a meeting.

Annually, the Chair compiles a report of pay issues discussed and concluded recommendations. These reports are available to the public, upon written request to the Committee's Secretary.

The public is invited to submit material in writing to the Chair on Federal Wage System pay matters felt to be deserving of the Committee's attention. Additional information on this meeting may be obtained by contacting the Committee's Secretary, Office of Personnel Management, Federal Prevailing Rate Advisory Committee, Room 5538, 1900 E Street, NW., Washington, DC 20415 (202) 606–1500.

Dated: December 11, 2003.

Mary M. Rose,

Chairperson, Federal Prevailing Rate Advisory Committee.

[FR Doc. 03–32130 Filed 12–30–03; 8:45 am]

BILLING CODE 6325–49–P

RAILROAD RETIREMENT BOARD

Proposed Collection; Comment Request

SUMMARY: In accordance with the requirement of section 3506 (c)(2)(A) of the Paperwork Reduction Act of 1995 which provides opportunity for public comment on new or revised data collections, the Railroad Retirement Board (RRB) will publish periodic summaries of proposed data collections.

Comments are invited on: (a) Whether the proposed information collection is necessary for the proper performance of

the functions of the agency, including whether the information has practical utility; (b) the accuracy of the RRB's estimate of the burden of the collection of the information; (c) ways to enhance the quality, utility, and clarity of the information to be collected; and (d) ways to minimize the burden related to the collection of information on respondents, including the use of automated collection techniques or other forms of information technology.

Title and purpose of information collection: Application for Survivor Insurance Annuities: OMB 3220–0030.

Under Section 2(d) of the Railroad Retirement Act (RRA), monthly survivor annuities are payable to surviving widow(er)s, parents, unmarried children, and in certain cases, divorced wives (husbands), mothers (fathers), remarried widow(er)s, and grandchildren of deceased railroad employees. The collection obtains the information required by the RRB to determine entitlement to and the amount of the annuity applied for.

The RRB currently utilizes Form(s) AA–17, Application for Widow(ers) Annuity, AA–17b Applications for Determination of Widow(er) Disability, AA–17cert, Application Summary and Certification, AA–18, Application for Mother's/Father's and Child's Annuity, AA–19, Application for Child's Annuity, AA–19a, Application for Determination of Child Disability, and AA–20, Application for Parent's Annuity to obtain the necessary information. One response is requested of each respondent. Completion is required to obtain benefits. The RRB proposes no changes to any of the forms currently in the information collection.

Estimate of Annual Respondent Burden

The estimated annual respondent burden is as follows:

Form Nos.	Annual responses	Time (min)	Burden (hrs)
AA–17 (manual, without assistance)	150	47	113
AA–17b (with assistance)	380	40	253
AA–17b (without assistance)	20	50	17
AA–17cert	3,265	20	1,088
AA–18 (manual, without assistance)	12	47	9
AA–19 (manual, without assistance)	9	47	7
AA–19a (with assistance)	285	45	214
AA–19a (without assistance)	15	65	16
AA–20 (manual, without assistance)	1	47	1

Additional Information or Comments: To request more information or to obtain a copy of the information collection justification, forms, and/or supporting material, please call the RRB Clearance Officer at (312) 751–3363. Comments regarding the information collection should be addressed to Ronald J. Hodapp, Railroad Retirement Board, 844 N. Rush Street, Chicago, Illinois 60611–2092. Written comments should be received within 60 days of this notice.

Chuck Mierzwa,

Clearance Officer.

[FR Doc. 03–32129 Filed 12–30–03; 8:45 am]

BILLING CODE 7905–01–P

SECURITIES AND EXCHANGE COMMISSION

Proposed Collection; Comment Request

Upon Written Request, Copies Available From: Securities and Exchange Commission, Office of Filings and Information, Washington, DC 20549.

Extension:

Rule 17Ad–16, SEC File No. 270–363, OMB Control No. 3235–0413.

Notice is hereby given that pursuant to the Paperwork Reduction Act of 1995 (44 U.S.C. 3501 *et seq.*), the Securities and Exchange Commission (''Commission'') has submitted to the Office of Management and Budget a request for extension of the previously approved collection of information discussed below.

Rule 17Ad–16—Notice of Assumption or Termination of Transfer Agent Services

Rule 17Ad–16, 17 CFR 240.17Ad–16, under the Securities Exchange Act of 1934, requires a registered transfer agent to provide written notice to a qualified registered securities depository when assuming or terminating transfer agent services on behalf of an issuer or when changing its name or address. These recordkeeping requirements address the problem of certificate transfer delays caused by transfer requests that are directed to the wrong transfer agent or the wrong address.

Given that there are approximately 450 submit Rule 17Ad–16 notices, the staff estimates that the average number of hours necessary for each transfer agent to comply with Rule 17Ad–16 is approximately 15 minutes per notice or 3.5 hours per year, totaling 1,575 hours industry-wide. The average cost per hour is approximately $30 per hour, with the industry-wide cost estimated at approximately $47,250. However, the information required by Rule 17Ad–16 generally already is maintained by registered transfer agents. The amount of time devoted to compliance with Rule 17Ad–16 varies according to differences in business activity.

Written comments are invited on: (a) Whether the proposed collection of information is necessary for the proper performance of the functions of the agency, including whether the information shall have practical utility; (b) the accuracy of the agency's estimates of the burden of the proposed collection of information; (c) ways to enhance the quality, utility, and clarity of the information on respondents; and (d) ways to minimize the burden of the collection of information on respondents, including through the use of automated collection techniques or other forms of information technology. Considerations will be given to comments and suggestions submitted in writing within 60 days of this publication.

Please direct your written comments to Kenneth A. Fogash, Acting Associate Executive Director/CIO, Office of Information Technology, Securities and Exchange Commission, 450 Fifth Street, NW., Washington, DC 20549.

Dated: December 22, 2003.

Margaret H. McFarland,

Deputy Secretary.

[FR Doc. 03–32169 Filed 12–30–03; 8:45 am]

BILLING CODE 8010–01–P

SECURITIES AND EXCHANGE COMMISSION

Proposed Collection; Comment Request

Upon written request, copies available from: Securities and Exchange Commission, Office of Filings and Information Services, Washington, DC 20549.

Extension: Rule 17Ad–2(c), (d), and (h); SEC File No. 270–149; OMB Control No. 3235–0130.

Notice is hereby given that pursuant to the Paperwork Reduction Act of 1995 (44 U.S.C. 3501 *et seq.*), the Securities and Exchange Commission (''Commission'') has submitted to the Office of Management and Budget a request for extension of the previously approved collection of information discussed below.

• Rule 17Ad–2(c), (d) and (h) Transfer Agent Turnaround, Processing and Forwarding Requirements

Rule 17Ad–2(c), (d), and (h), 17 CFR 240.17Ad–2(c), (d), and (h), under the Securities Exchange Act of 1934, enumerate the requirements with which transfer agents must comply to inform the Commission or the appropriate regulator of a transfer agent's failure to meet the minimum performance standards set by the Commission rule by filing a notice.

While it is estimated there are 900 transfer agents, approximately ten notices pursuant to 17Ad–2(c), (d), and (h) are filed annually. In view of (a) the readily available nature of most of the information required to be included in the notice (since that information must be compiled and retained pursuant to other Commission rules); (b) the summary fashion in which such information must be presented in the notice (most notices are one page or less in length); and (c) the experience of the staff regarding the notices, the Commission staff estimates that, on the average, most Notices require approximately one-half hour to prepare. The Commission staff estimates that transfer agents spend an average of five hours per year complying with the rule.

Written comments are invited on: (a) Whether the proposed collection of information is necessary for the proper performance of the functions of the agency, including whether the information shall have practical utility; (b) the accuracy of the agency's estimates of the burden of the proposed collection of information; (c) ways to enhance the quality, utility, and clarity of the information on respondents; and (d) ways to minimize the burden of the collection of information on respondents, including through the use of automated collection techniques or other forms of information technology. Consideration will be given to comments and suggestions submitted in writing within 60 days of this publication.

Please direct your written comments to Kenneth A. Fogash, Acting Associate Executive Director/CIO, Office of Information Technology, Securities and Exchange Commission, 450 Fifth Street, NW., Washington, DC 20549.

Dated: December 22, 2003.

Margaret H. McFarland,

Deputy Secretary.

[FR Doc. 03–32170 Filed 12–30–03; 8:45 am]

BILLING CODE 8010–01–P

SECURITIES AND EXCHANGE COMMISSION

[Release No. 34–48987; File No. SR–CTA/CQ–2003–01]

Consolidated Tape Association; Notice of Filing of the Fifth Substantive Amendment to the Second Restatement of the Consolidated Tape Association Plan and the Third Substantive Amendment to the Restated Consolidated Quotation Plan and Amendment No. 1 Thereto

December 23, 2003.

Pursuant to Rule 11Aa3–2 [1] under the Securities Exchange Act of 1934 (''Act''), notice is hereby given that on November 28, 2003, the Consolidated Tape Association (''CTA'') Plan and Consolidated Quotation (''CQ'') Plan Participants (''Participants'') [2] filed with the Securities and Exchange Commission (''SEC'' or ''Commission'') a proposal to amend the CTA and CQ Plans (collectively, the ''Plans''). The proposal represents the 5th substantive amendment made to the Second Restatement of the CTA Plan and the 3rd substantive amendment to the Restated CQ Plan, and reflects changes unanimously adopted by the Participants. The proposed amendments would delete the provisions of the Plans that exempt any Participant in the Plans from paying market data fees for the receipt of data on its trading floor for regulation or surveillance or for other specifically approved purposes (''Participant Fee Exemptions''). On December 23, 2003, the Participants submitted Amendment No. 1 to the proposed amendments.[3] The Commission is publishing this notice to solicit comments from interested persons on the proposed amendments to the Plans.

I. Description and Purpose of the Amendments

A. Rule 11Aa3–2 [4]

Currently, the Plans specify that each Participant is exempt from certain market data charges (other than access fees) if it is in compliance with the requisite market data contract. According to the Participant Fee Exemptions, the market data contract must require the Participant (1) to receive market data solely at premises that it occupies solely or on its ''trading floor or trading floors'' (as that term is generally understood), and (2) to use the data solely for regulatory, surveillance and other approved purposes.

The Participants propose to amend the Plans to require each Participant to pay the same fees for its receipt and use of market data as other market participants pay, regardless of whether the Participant receives the data on its trading floor or elsewhere or uses the data for surveillance or other purposes.

The Participants believe that eliminating the Participant Fee Exemptions will eliminate disputes that have arisen among the Participants regarding what constitutes a ''trading floor'' (as that term is generally understood) and will eliminate a perceived competitive advantage that the Participant Fee Exemptions give Participant markets over non-exchange markets (such as electronic communications networks and other alternative trading systems), over NASD market makers and, in the case of Participants that trade options, over non-Participant options markets.

The Participants believe that the filing of the proposed amendments is in fulfillment of the national market system objectives regarding the dissemination of market information as anticipated by sections 11A(a)(1)(C),[5] 11A(a)(1)(D) [6] and 11A(a)(3)(B) [7] of the Act.

---

[1] 17 CFR 240.11Aa3–2.

[2] Each Participant executed the proposed amendments. The Participants are the American Stock Exchange LLC; Boston Stock Exchange, Inc.; Chicago Board Options Exchange, Inc.; Chicago Stock Exchange, Inc.; Cincinnati Stock Exchange, Inc.; National Association of Securities Dealers, Inc. (''NASD''); New York Stock Exchange, Inc. (''NYSE''); Pacific Exchange, Inc.; and Philadelphia Stock Exchange, Inc.

[3] *See* letter to Jonathan G. Katz, Secretary, Commission, from Thomas E. Haley, Chairman, CTA, dated December 22, 2003 (''Amendment No. 1''). Amendment No. 1 makes a technical correction to the proposed amendments.

[4] 17 CFR 240.11Aa3–2.

[5] 15 U.S.C. 78k–1(a)(1)(C).

[6] 15 U.S.C. 78k–1(a)(1)(D).

[7] 15 U.S.C. 78k–1(a)(3)(B).

B. Governing or Constituent Documents

Not applicable.

C. Implementation of Amendment

The Participants have manifested their approval of the proposed amendments to the CTA and CQ Plans by means of their execution of the proposed amendments. The proposed amendments would become effective upon Commission approval of the proposed amendments. The Participants will commence to pay the fees that are the subject of the exemption in the billing cycle that follows the Commission's approval of these proposed amendments.

D. Development and Implementation Phases

See Item I.C. above.

E. Analysis of Impact on Competition

The Participants believe that the proposed amendments do not impose any burden on competition that is not necessary or appropriate in furtherance of the purposes of the Act. The Participants do not believe that the proposed plan amendments introduce terms that are unreasonably discriminatory for the purposes of section 11A(c)(1)(D)[8] of the Act.

F. Written Understanding or Agreements relating to Interpretation of, or Participation in, Plan

The Participants do not anticipate that they will enter into any new written understandings or agreements relating to the interpretation of the Plans or to conditions for becoming a sponsor or participant in the Plans.

G. Approval by Sponsors in Accordance With Plan

In accordance with Section IV(b) of the CTA Plan and Section IV(c) of the CQ Plan, each of the Participants has approved the proposed amendments.

H. Description of Operation of Facility Contemplated by the Proposed Amendment

Not applicable.

I. Terms and Conditions of Access

By removing the exemptions, the proposed amendments would subject the Participants to the same fee schedule as all other recipients and users of market data.

J. Method of Determination and Imposition, and Amount of, Fees and Charges

The proposed amendments do not change the method for determining, and the amount of, fees and charges. However, the proposed amendments do impose charges for regulation, surveillance and other previously exempted purposes on the Participants.

K. Method and Frequency of Processor Evaluation

Not applicable.

L. Dispute Resolution

Not applicable.

II. Rule 11Aa3–1[9]

A. Reporting Requirements

Not applicable.

B. Manner of Collecting, Processing, Sequencing, Making Available and Disseminating Last Sale Information

Not applicable.

C. Manner of Consolidation

Not applicable.

D. Standards and Methods Ensuring Promptness, Accuracy and Completeness of Transaction Reports

Not applicable.

E. Rules and Procedures Addressed to Fraudulent or Manipulative Dissemination

Not applicable.

F. Terms of Access to Transaction Reports

By removing the Participant Fee Exemptions, the proposed amendments would subject the Participants to the same fee schedule as all other persons seeking access to the Participants' transaction reports.

G. Identification of Marketplace of Execution

Not Applicable.

III. Solicitation of Comments

Interested persons are invited to submit written data, views, and arguments concerning the foregoing, including whether the proposed amendments are consistent with the Act. Persons making written submissions should file six copies thereof with the Secretary, Securities and Exchange Commission, 450 Fifth Street, NW., Washington, DC 20549–0609. Comments may also be submitted electronically at the following e-mail address: *rule-comments@sec.gov*. All comment letters should refer to File No. SR–CTA/CQ–2003–02. This file number should be included on the subject line if e-mail is used. To help the Commission process and review comments more efficiently, comments should be sent in hardcopy or by e-mail but not by both methods. Copies of the submission, all subsequent amendments, all written statements with respect to the proposed amendments that are filed with the Commission, and all written communications relating to the proposal between the Commission and any person, other than those that may be withheld from the public in accordance with the provisions of 5 U.S.C. 552, will be available for inspection and copying in the Commission's Public Reference Room. Copies of the filing will also be available for inspection and copying at the principal office of CTA.

All submissions should refer to File No. SR–CTA/CQ–2003–01 and be submitted by January 21, 2004.

For the Commission, by the Division of Market Regulation, pursuant to delegated authority.[10]

Jill M. Peterson,

Assistant Secretary.

[FR Doc. 03–32181 Filed 12–30–03; 8:45 am]

BILLING CODE 8010–01–P

[8] 15 U.S.C. 78k–1(c)(1)(D).

[9] 17 CFR 240.11Aa3–1.

[10] 17 CFR 200.30–3(a)(27).

SECURITIES AND EXCHANGE COMMISSION

[Release No. 34–48984; File No. SR–CTA/CQ–2003–02]

Consolidated Tape Association; Notice of Filing of the Sixth Substantive Amendment to the Second Restatement of the Consolidated Tape Association Plan and the Fourth Substantive Amendment to the Restated Consolidated Quotation Plan and Amendment No. 1 Thereto

December 23, 2003.

Pursuant to Rule 11Aa3–2[1] under the Securities Exchange Act of 1934 (''Act''), notice is hereby given that on November 28, 2003, the Consolidated Tape Association (''CTA'') Plan and Consolidated Quotation (''CQ'') Plan Participants (''Participants'')[2] filed with the Securities and Exchange Commission (''SEC'' or ''Commission'') a proposal to amend the CTA and CQ Plans (collectively, the ''Plans''). The proposal represents the 6th substantive amendment made to the Second

[1] 17 CFR 240.11Aa3–2.

[2] Each Participant executed the proposed amendments. The Participants are the American Stock Exchange LLC (''Amex''); Boston Stock Exchange, Inc.; Chicago Board Options Exchange, Inc.; Chicago Stock Exchange, Inc.; Cincinnati Stock Exchange, Inc.; National Association of Securities Dealers, Inc.; New York Stock Exchange, Inc.; Pacific Exchange, Inc.; and Philadelphia Stock Exchange, Inc.

Restatement of the CTA Plan and the 4th substantive amendment to the Restated CQ Plan, and reflects several changes unanimously adopted by the Participants. The proposed amendments would separate the functions of administering the contracts into which vendors and others enter for the purpose of receiving and using market data. On December 23, 2003, the Participants submitted Amendment No. 1 to the proposed amendments.[3] The Commission is publishing this notice to solicit comments from interested persons on the proposed amendments to the Plans.

I. Description and Purpose of the Amendments

A. Rule 11Aa3–2 [4]

Since 1989, NYSE has performed certain administrative functions on behalf of the Network B Administrator.[5] These functions include procuring and maintaining the contracts by which vendors and others receive and use the market data that both Network A and Network B make available.[6] NYSE executes the Consolidated Vendor Form on behalf of itself, the Network B administrator and the other Plan Participants.

The Participants propose to once again divide the contract-administration function between the Network A administrator (NYSE) (for the receipt and use of Network A market data) and the Network B administrator (Amex) (for the receipt and use of Network B market data). To make the separation of contract functions possible, the amendments propose to replace the Consolidated Vendor Form with two new forms, a ''Network A Consolidated Vendor Form'' and a ''Network B Consolidated Vendor Form.''

Under the proposal, the Amex would assume all contract-administration functions for the Network B Consolidated Vendor Form and would execute those forms on behalf of itself and the other Network B Participants. The NYSE would continue to perform the contract-administration functions for Network A and would execute the Network A Consolidated Vendor Form on behalf of itself and the other Network A Participants.

In terms of substance, the Network A Consolidated Vendor Form and the Network B Consolidated Vendor Form would offer the same terms and conditions as does the Consolidated Vendor Form. The only difference would be that the Consolidated Vendor Form governs the receipt and use of both Network A and Network B market data, whereas the Network A Consolidated Vendor Form governs the receipt and use of Network A market data and the Network B Consolidated Vendor Form will govern the receipt and use of Network B market data.

The Participants originally submitted the Consolidated Vendor Form to the Commission on October 16, 1989.[7] They made certain revisions to the form in response to changes recommended by commenters and re-filed the Consolidated Vendor Form for immediate effectiveness in August 1990.[8] In conjunction with its submission of amended and restated CTA and CQ Plans in December 1995, the Participants submitted a revised version of the Consolidated Vendor Form to the Commission. That revised version made non-substantive changes to conform the form's language to the language in the Plans and to provide greater clarity and standardization in the definitions. The Commission approved the restated Plans, including the revised version of the Consolidated Vendor Form, in May 1996.[9] The amendments propose the first changes to the Consolidated Vendor Form since then.

The Participants believe that the filing of the proposed amendments is in fulfillment of the national market system objectives regarding the dissemination of market information as anticipated by sections 11A(a)(1)(C),[10] 11A(a)(1)(D) [11] and 11A(a)(3)(B) [12] of the Act.

B. Governing or Constituent Documents

The proposed amendments would replace the Consolidated Vendor Form with a new Network A Consolidated Vendor Form and a new Consolidated Network B Vendor Form.

C. Development and Implementation of Amendments

Under the proposal, the Amex would assume Network B contract-administration functions within 90 days from the Commission's approval of these proposed amendments. The network administrators would commence to use the Network A Consolidated Vendor Form and the Network B Consolidated Vendor Form at that time. The Participants state that they intend to notify vendors and other interested parties, both in writing and through verbal contact, of the two new forms.

D. Analysis of Impact on Competition

The Participants believe that the proposed amendments do not impose any burden on competition that is not necessary or appropriate in furtherance of the purposes of the Act. The Participants do not believe that the proposed plan amendments introduce terms that are unreasonably discriminatory for the purposes of section 11A(c)(1)(D) of the Act.[13]

E. Written Understanding or Agreements Relating to Interpretation of, or Participation in, Plan

The Participants do not anticipate that they will enter into any new written understandings or agreements relating to the interpretation of the Plans or to conditions for becoming a sponsor or participant in the Plans.

---

[3] *See* letter to Jonathan G. Katz, Secretary, Commission, from Thomas E. Haley, Vice President of Market Data, NYSE dated December 22, 2003 (''Amendment No. 1''). Amendment No. 1 makes a technical correction to the proposed amendments.

[4] 17 CFR 240.11Aa3–2.

[5] In 1989, the Participants introduced the Consolidated Vendor Form and that form of vendor agreement is still in use. *See* Securities Exchange Act Release No. 27498 (December 4, 1989), 54 FR 50828 (December 11, 1989). The Consolidated Vendor Form applies to the receipt and use of Network B market data, as well as Network A market data. Pursuant to delegated authority, NYSE has administered that consolidated vendor form on behalf of the Network B Participants as well as on behalf of the Network A Participants. Prior to the introduction of that form of vendor agreement, NYSE administered the Network A vendor agreements on behalf of the Network A Participants and the Amex administered the Network B vendor agreements on behalf of the Network B Participants.

[6] The form of contract that is the subject of the proposal is the form of contract (the Consolidated Vendor Form) that the Participants require ''Customers'' to enter into for their receipt and use of the market data that the Participants make available under the Plans. ''Customers'' include (1) vendors, (2) internal and other data redistributors, and (3) those that internally use market data for the purposes that are subject to the Plans' program classification charges. The Consolidated Vendor Form constitutes Exhibit C to each Plan.

End users that do not redistribute data and do not use it for the purposes that are the subject of the program classification charges receive the data pursuant to ''subscriber'' forms of agreement. NYSE, as the Network A administrator, currently administers the Network A form of that agreement. The Amex, as the Network B administrator, currently administers a Network B form of that agreement. The amendments do not propose any change to those subscriber forms.

[7] *See* Securities Exchange Act Release No. 27498 (December 4, 1989), 54 FR 50828 (December 11, 1989).

[8] *See* Securities Exchange Act Release No. 28407 (September 6, 1990), 55 FR 37276 (September 10, 1990).

[9] *See* Securities Exchange Act Release No. 37191 (May 9, 1996), 61 FR 24842 (May 16, 1996).

[10] 15 U.S.C. 78k–l(a)(1)(C).

[11] 15 U.S.C. 78k–l(a)(1)(D).

[12] 15 U.S.C. 78k–l(a)(3)(B).

[13] 15 U.S.C. 78k–l(c)(1)(D).

F. Approval by Sponsors in Accordance With Plan

In accordance with Section IV(b) of the CTA Plan and Section IV(c) of the CQ Plan, each of the Participants has approved the amendments.

G. Description of Operation of Facility Contemplated by the Proposed Amendment

Not applicable.

H. Terms and Conditions of Access

Because the two new forms make no changes in substance to the Consolidated Vendor Form, the amendments do not change the terms and conditions of access, other than that the Amex, rather than the NYSE, would now service those wishing to receive access to the Network B data feed.

I. Method of Determination and Imposition, and Amount of, Fees and Charges

Not applicable.

J. Method and Frequency of Processor Evaluation

Not applicable.

K. Dispute Resolution

Not applicable.

II. Rule 11Aa3–1 [14]

A. Reporting Requirements

Not applicable.

B. Manner of Collecting, Processing, Sequencing, Making Available and Disseminating Last Sale Information

Not applicable.

C. Manner of Consolidation

Not applicable.

D. Standards and Methods Ensuring Promptness, Accuracy and Completeness of Transaction Reports

Not applicable.

E. Rules and Procedures Addressed to Fraudulent or Manipulative Dissemination

Not applicable.

F. Terms of Access to Transaction Reports

Because the two new forms make no changes in substance to the Consolidated Vendor Form, the proposed amendments do not change the terms of access to transaction reports, other than that the Amex, rather than NYSE, would now service those wishing to receive access to the Network B data feed.

[14] 17 CFR 240.11Aa3–1.

G. Identification of Marketplace of Execution

Not Applicable.

III. Solicitation of Comments

Interested persons are invited to submit written data, views, and arguments concerning the foregoing, including whether the proposed amendments are consistent with the Act. Persons making written submissions should file six copies thereof with the Secretary, Securities and Exchange Commission, 450 Fifth Street, NW., Washington, DC 20549–0609. Comments may also be submitted electronically at the following e-mail address: rule-comments@sec.gov. All comment letters should refer to File No. SR–CTA/CQ–2003–02. This file number should be included on the subject line if e-mail is used. To help the Commission process and review your comments more efficiently, comments should be sent in hardcopy or by e-mail but not by both methods. Copies of the submission, all subsequent amendments, all written statements with respect to the proposed amendments that are filed with the Commission, and all written communications relating to the proposal between the Commission and any person, other than those that may be withheld from the public in accordance with the provisions of 5 U.S.C. 552, will be available for inspection and copying in the Commission's Public Reference Room. Copies of the filing will also be available for inspection and copying at the principal office of CTA. All submissions should refer to File No. SR–CTA/CQ–2003–02 and be submitted by January 21, 2004.

For the Commission, by the Division of Market Regulation, pursuant to delegated authority.[15]

Jill M. Peterson,

Assistant Secretary.

[FR Doc. 03–32182 Filed 12–30–03; 8:45 am]

BILLING CODE 8010–01–P

[15] 17 CFR 200.30–3(a)(27).

SECURITIES AND EXCHANGE COMMISSION

[Release No. 34–48964; File No. SR–Amex–2003–107]

Self-Regulatory Organizations; Notice of Filing and Immediate Effectiveness of Proposed Rule Change by the American Stock Exchange LLC Relating to a Six-Month Extension of the Exchange's Pilot Program for Automatic Execution of Orders for Exchange Traded Funds

December 19, 2003.

Pursuant to section 19(b)(1) of the Securities Exchange Act of 1934 (''Act''),[1] and Rule 19b–4 [2] thereunder, notice is hereby given that on December 5, 2003, the American Stock Exchange LLC (''Exchange'' or ''Amex'') filed with the Securities and Exchange Commission (''Commission'') the proposed rule change as described in Items I, II, and III below, which Items have been prepared by Amex. The Commission is publishing this notice to solicit comments on the proposed rule change from interested persons.

I. Self-Regulatory Organization's Statement of the Terms of Substance of the Proposed Rule Change

Amex seeks a six-month extension of Amex Rule 128A to continue its pilot program for the automatic order execution feature (''Auto-Ex'') for Exchange Traded Funds (''ETFs'').

The text of the proposed rule change is available at Amex and at the Commission.

II. Self-Regulatory Organization's Statement of the Purpose of, and Statutory Basis for, the Proposed Rule Change

In its filing with the Commission, Amex included statements concerning the purpose of and basis for the proposed rule change and discussed any comments it received on the proposed rule change. The text of these statements may be examined at the places specified in Item IV below. Amex has prepared summaries, set forth in Sections A, B, and C below, of the most significant aspects of such statements.

A. Self-Regulatory Organization's Statement of the Purpose of, and Statutory Basis for, the Proposed Rule Change

I. Purpose

On June 19, 2001, the Commission approved the Exchange's proposal, adopted as Amex Rule 128A, to

[1] 15 U.S.C. 78s(b)(1).

[2] 17 CFR 240.19b–4.

implement an automatic execution system for ETFs on a six-month pilot program basis.[3] On December 20, 2001, June 17, 2002, December 30, 2002, and July 2, 2003, the pilot was extended for consecutive terms of six months.[4] The Exchange now seeks to extend the pilot for an additional six months.

Since 1986, the Exchange has had an Auto-Ex feature for eligible orders in listed options. The Chicago Board Options Exchange, Philadelphia Stock Exchange, and Pacific Exchange established similar Auto-Ex features at about the same time as Amex, and the newest options exchange, the International Securities Exchange, also features automatic order execution. Auto-Ex, accordingly, has been a standard feature of the options markets for a number of years.

In 1993, Amex commenced trading Standard and Poor's Depositary Receipts (''SPDRs®''), the first ETF to be listed and traded on Amex. ETFs are individual securities that represent a fractional, undivided interest in a portfolio of securities. Currently, more than 100 ETFs are listed on Amex. Like an option, an ETF is a derivative security, and, according to Amex, its price is a function of the value of the portfolio of securities underlying the ETF. Thus, the Exchange asserts that, as is the case with options, it is not the price discovery market for ETFs, and that the price discovery market is the market or markets where the underlying securities trade.

The Exchange is now proposing to extend its current Auto-Ex technology for an additional six months to ETFs listed under Amex Rules 1002, 1002A, and 1202. Amex represents that this will continue to provide investors that send eligible orders to the Exchange with faster executions than they otherwise would receive. The Exchange believes that many investors desire rapid executions in trading securities that are priced derivatively since the value of the underlying instruments may fluctuate during order processing. Amex, moreover, will continue under the pilot extension to incorporate a price improvement algorithm into Auto-Ex for ETFs, which Amex expects will provide investors with better execution prices on their orders. The price improvement algorithm works in the following manner:

When Amex establishes the National Best Bid or Offer (''NBBO''), Auto-Ex is programmed to execute eligible incoming ETF orders at the Amex Published Quote (''APQ'') plus a programmable number of trading increments with respect to the Amex bid, and less a programmable number of trading increments in the case of the Amex offer.[5] For example, if the APQ were 90.10 to 90.20, and the APQ constituted the NBBO, incoming sell orders might be automatically executed at 90.12 (the Amex bid plus two ticks) and incoming buy orders might be executed at 90.18 (the Amex offer less two ticks).

If Amex does not establish the NBBO, Auto-Ex is programmed to execute eligible incoming ETF orders at or better than the NBBO up to a specified number of trading increments relative to the APQ.[6] Auto-Ex executes an eligible order at an improved price relative to the APQ unless such execution would result in a trade-through with respect to the price of an away market that is a participant in the Intermarket Trading System (''ITS'').[7] If a trade-through would result, the order is routed to the specialist for processing through the Amex electronic order book.

For example, assume that Auto-Ex is programmed to execute an order at the Amex bid plus two ticks. If the Amex bid were 90, and an away ITS market were bidding 90.01, an incoming sell order would be automatically executed on Amex at 90.02. Continuing with this example, if the away market were bidding 90.02, an incoming sell order would be automatically executed on Amex at 90.02 (matching the away market). If the away market were bidding 90.03, the incoming sell order would not be automatically executed. Instead, it would be routed to the specialist for electronic processing through the Amex electronic order book.

The amount of price improvement that the system provides, both when Amex establishes the NBBO and when it does not, is determined by the Auto-Ex Enhancements Committee (''Committee'') upon the request of a specialist and may differ among ETFs. The Committee consists of the Exchange's four Floor Governors and the Chairmen (or their designees) of the Specialists Association, Options Market Makers Association, and the Floor Brokers Association, respectively. The Exchange believes that the amount of price improvement will vary among securities based upon factors such as the width of the spread, the volatility of the underlying basket of securities underlying the ETF, and liquidity of available hedging vehicles. The amount of price improvement may be adjusted intra-day by the Committee.

As detailed in Amex Rule 128A, Auto-Ex for ETFs with price improvement is unavailable when the spread is at a specified minimum and maximum variation that may be adjusted security to security. The Committee determines, upon the request of a specialist, the minimum and maximum spreads at which Auto-Ex is unavailable. As further provided by Amex Rule 128A, Auto-Ex is also unavailable with respect to incoming sell orders when the Amex bid is for 100 shares, and similarly unavailable with respect to incoming buy orders when the Amex offer is for 100 shares.

Orders that are otherwise Auto-Ex eligible orders are also routed to the specialist, and not automatically executed, in situations where the specialist in conjunction with a Floor Governor or two Floor Officials determine that quotes are not reliable and the Exchange is experiencing communications or systems problems, ''fast markets,'' or delays in the dissemination of quotes. Members and member organizations are notified when the Exchange has determined that quotes are not reliable prior to disengaging Auto-Ex.

Specialists and Registered Options Traders (''ROTs'') that sign onto the system are automatically allocated the contra side of Auto-Ex trades for ETFs. Due to the automatic price improvement feature, the specialists and ROTs that sign onto Auto-Ex for ETFs are deemed to be on parity for purposes of allocating the contra side of ETF Auto-Ex trades. Amex Rule 128A incorporates the following methodology for the

[3] *See* Securities Exchange Act Release No. 44449 (June 19, 2001), 66 FR 33724 (June 25, 2001) (approval of File No. SR–Amex–2001–29).

[4] *See* Securities Exchange Act Release Nos. 45176, 66 FR 67582 (December 31, 2001); 46085, 67 FR 42836 (June 25, 2002); 47105, 68 FR 592 (January 6, 2003); and 48126, 68 FR 41189 (July 10, 2003) (notices of filing and immediate effectiveness of File Nos. SR–Amex–2001–105, SR–Amex–2002–42, SR–Amex–2002–99, and SR–Amex–2003–61, respectively).

[5] The term ''establish,'' as used in Amex Rule 128A, means that the APQ is currently at the NBBO, regardless of whether Amex was the first exchange to be at that price. *See* Securities Exchange Act Release No. 44449 (June 19, 2001), 66 FR 33724 (June 25, 2001).

[6] Amex represents that once an order that is Auto-Ex eligible is sent to the Exchange, the person that initiated the order has no control over its execution. This is the case regardless of whether the order is executed by Auto-Ex or is executed by the specialist because Auto-Ex is unavailable. If the order is routed to the specialist for handling because Auto-Ex is unavailable, the specialist does not know if the order is for the account of a broker-dealer or for the account of a customer. This information is in the Exchange's order processing systems and is unavailable to the specialist.

[7] The number of trading increments designated for price improvement when Amex establishes the NBBO may be different than the number of increments designated for price improvement when Amex does not establish the NBBO. *See* Securities Exchange Act Release No. 44449 (June 19, 2001), 66 FR 33724 (June 25, 2001).

allocation of the contra side to Auto-Ex ETF trades:

Number of ROTs Signed on to Auto-Ex in a Crowd	Approximate Number of Trades Allocated to the Specialist Throughout the Day (''Target Ratio Percent'')	Approximate Number of Trades Allocated to ROTs Signed on to Auto-Ex Throughout the Day (''Target Ratio Percent'')
1	60	40
2–4	40	60
5–7	30	70
8–15	25	75
16 or more	20	80

At the start of each trading day, the sequence in which trades are allocated to the specialist and ROTs signed onto Auto-Ex is randomly determined. Auto-Ex trades then are automatically allocated in sequence on a rotating basis to the specialist and to the ROTs that have signed onto the system so that the specialist and the crowd achieve their ''target ratios'' over the course of a trading session. If an Auto-Ex eligible order is greater than 100 shares, Auto-Ex divides the trade into lots of 100 shares each. Each lot is considered a separate trade for purposes of determining target ratios and allocating trades within Auto-Ex.

Round lot orders delivered to the post electronically for 2,000 shares or less are eligible for Auto-Ex for ETFs. Orders for an account in which a market maker in ETFs registered as such on another market has an interest are ineligible for Auto-Ex for ETFs. The Exchange represents that, if orders for such market makers were eligible for Auto-Ex with price improvement, Amex specialists and ROTs would be unable to make markets with the proposed liquidity for other investors. (Orders for Amex ROTs are ineligible for Auto-Ex for ETFs pursuant to Commentaries .04 and .05 to Amex Rule 111 and Amex Rule 950(c).)[8]

The specialist may request the Exchange to increase the maximum size of Auto-Ex eligible orders. Under Amex Rule 128A, such requests are reviewed by the Committee, which approves, disapproves, or conditionally approves such requests. Amex Rule 128A directs the Committee to balance the interests of investors, the specialist, ROTs in the crowd, and the Exchange in determining whether to grant a request to increase the size of Auto-Ex eligible orders. The Committee also may consider requests from the specialist or ROTs to reduce the size of Auto-Ex eligible orders, balancing the same interests that it would consider in reviewing a request to increase the size of Auto-Ex eligible orders. The Committee, however, is not permitted to reduce the size of Auto-Ex eligible orders below 2,000 shares.

In addition, under Amex Rule 128A, the Committee may delegate its authority to one or more Floor Governors. Amex Rule 128A provides, however, that the Committee must meet promptly to review a Floor Official's decision in the event that a Floor Governor acts pursuant to its delegated authority.

Amex Rule 128A further provides that, in the event of system problems or unusual market conditions, a Floor Governor is permitted to reduce the size of Auto-Ex eligible orders below 2,000 shares or increase the size of Auto-Ex eligible orders up to 5,000 shares. Any such change is temporary and lasts only until the end of the unusual market condition or the correction of the system problem. Members and member organizations are notified when the size of Auto-Ex eligible orders is adjusted due to system problems or unusual market conditions.

Amex Rule 128A also provides that the Chairman and Vice Chairman of the Exchange, acting jointly, determine which ETFs are Auto-Ex eligible.

2. Basis

The Exchange believes the proposed rule change is consistent with section 6 of the Act,[9] in general, and with section 6(b)(5) of the Act,[10] in particular, in that it is designed to prevent fraudulent and manipulative acts and practices, to promote just and equitable principles of trade, to foster cooperation and coordination with persons engaged in regulating, clearing, settling, processing information with respect to and facilitating transactions in securities, to remove impediments to and perfect the mechanism of a free and open market and a national market system, and, in general, to protect investors and the public interest, and is not designed to permit unfair discrimination between customers, issuers, brokers and dealers.

The proposed rule change will allow the Auto-Ex for ETFs pilot program to continue for an additional six months. The Exchange believes that the proposal also facilitates the comparison and settlement of trades since Auto-Ex transactions result in ''locked-in'' trades. Moreover, Auto-Ex for ETFs automatically provides investors with price improvement on their orders.

B. Self-Regulatory Organization's Statement on Burden on Competition

Amex believes that the proposed rule change will impose no burden on competition that is not necessary or appropriate in furtherance of the purposes of the Act. The Exchange believes that the proposal, in fact, will enhance competition among markets and market makers and thereby benefit investors by allowing the Exchange to continue to provide Auto-Ex for ETFs with price improvement.

C. Self-Regulatory Organization's Statement on Comments on the Proposed Rule Change Received From Members, Participants, or Others

No written comments were solicited or received with respect to the proposed rule change.

III. Date of Effectiveness of the Proposed Rule Change and Timing for Commission Action

Because the foregoing proposed rule change (1) does not significantly affect the protection of investors or the public interest; (2) does not impose any significant burden on competition; and (3) by its terms, does not become operative until 30 days from the date on which it was filed, or such shorter time as the Commission may designate if consistent with the protection of investors and the public interest, and the Exchange provided the Commission

[8] The Commission notes that it recently approved a rule change by Amex that eliminated the 10-second ''speed bump'' on the entry of successive Auto-Ex order for ETFs, while allowing it to be reinstated if conditions warrant its reintroduction. *See* Securities Exchange Act Release No. 48818 (November 21, 2003), 68 FR 67496 (December 2, 2003) (approving File No. SR–Amex–2003–28).

[9] 15 U.S.C. 78f.

[10] 15 U.S.C. 78f(b)(5).

with written notice of its intent to file the proposed rule change, along with a brief description and text of the proposed rule change, at least five business days prior to the date of filing of the proposed rule change or such shorter time as designated by the Commission, it has become effective pursuant to section 19(b)(3)(A) of the Act[11] and Rule 19b–4(f)(6) thereunder.[12]

Amex has requested that the Commission waive the usual five-business-day notice period and the usual 30-day pre-operative waiting period. The Commission notes that this proposal simply extends the existing pilot program and does not alter the pilot in any way. As a result, the Commission believes that it is consistent with the protection of investors and the public interest to waive the five-business-day notice period and accelerate the operative date so that the pilot can continue without delay and because the proposal raises no new regulatory issues. Therefore, the Commission designates that the proposal become operative immediately.[13] This pilot extension will expire on June 19, 2004.

At any time within 60 days of the filing of this proposed rule change, the Commission may summarily abrogate such rule change if it appears to the Commission that such action is necessary or appropriate in the public interest, for the protection of investors, or otherwise in furtherance of the purposes of the Act.

IV. Solicitation of Comments

Interested persons are invited to submit written data, views, and arguments concerning the foregoing, including whether the proposed rule change is consistent with the Act. Persons making written submissions should file six copies thereof with the Secretary, Securities and Exchange Commission, 450 Fifth Street, NW., Washington, DC 20549–0609. Comments may also be submitted electronically at the following e-mail address: *rule-comments@sec.gov.* All comment letters should refer to File No. SR–Amex–2003–107. This file number should be included on the subject line if e-mail is used. To help the Commission process and review comments more efficiently, comments should be sent in hardcopy or by e-mail but not by both methods. Copies of the submission, all subsequent amendments, all written statements with respect to the proposed rule change that are filed with the Commission, and all written communications relating to the proposed rule change between the Commission and any person, other than those that may be withheld from the public in accordance with the provisions of 5 U.S.C. 552, will be available for inspection and copying in the Commission's Public Reference Room. Copies of such filing will also be available for inspection and copying at the principal office of Amex. All submissions should be submitted by January 21, 2004.

For the Commission, by the Division of Market Regulation, pursuant to delegated authority.[14]

Margaret H. McFarland,

Deputy Secretary.

[FR Doc. 03–32172 Filed 12–30–03; 8:45 am]

BILLING CODE 8010–01–P

[11] 15 U.S.C. 78s(b)(3)(A).

[12] 17 CFR 240.19b–4(f)(6).

[13] For purposes only of accelerating the operative date of this proposal, the Commission has considered the proposed rule's impact on efficiency, competition, and capital formation. 15 U.S.C. 78c(f).

[14] 17 CFR 200.30–3(a)(12).

SECURITIES AND EXCHANGE COMMISSION

[Release No. 34–48975; File No. SR–Amex–2003–44]

Self-Regulatory Organizations; Notice of Filing of Proposed Rule Change by the American Stock Exchange LLC Relating to Percentages Used To Allocate Executed Options Contracts Between the Specialist and Registered Options Traders

December 23, 2003.

Pursuant to section 19(b)(1) of the Securities Exchange Act of 1934 (''Act''),[1] and Rule 19b-4 thereunder,[2] notice is hereby given that on May 14, 2003, the American Stock Exchange LLC (''Amex'' or ''Exchange'') filed with the Securities and Exchange Commission (''Commission'') the proposed rule change as described in Items I, II, and III below, which Items have been prepared by the Exchange. On November 18, 2003, Amex filed Amendment No. 1 to the proposed rule change.[3] The Commission is publishing this notice to solicit comments on the proposed rule change, as amended, from interested persons.

I. Self-Regulatory Organization's Statement of the Terms of Substance of the Proposed Rule Change

Amex proposes to amend Amex Rules 933 and 950 to revise the percentages used to allocate executed contracts between the specialist and registered options traders. In addition, the Exchange is correcting the paragraph reference to the allocation provisions in Amex Rule 933 from (d) to (h).

Below is the text of the proposed rule change, as amended. Deleted language is in brackets. Proposed new language is *italicized.*

* * * * *

Rule 933 Automatic Execution of Options Orders

(a) through (g) No change.

[(d)] *(h)(i)* Options orders executed through Auto-Ex shall be automatically allocated on a rotating basis to the specialist and to each trader that has signed on to Auto-Ex. Auto-Ex trades of ten contracts or less are allocated to each Auto-Ex participant as set forth below. If an Auto-Ex trade is greater than ten contracts, the Auto-Ex system divides the execution into lots of ten or fewer contracts and allocates a lot to each Auto-Ex participant. Each lot is considered a separate trade for purposes of allocating trades within Auto-Ex. The rotation is designed to provide that the allocation of Auto-Ex trades between the specialist and traders signed on to Auto-Ex in a given *equity* option class is as follows:

Number of traders signed on to Auto-Ex	*Approximate number of trades allocated to the specialist*	*trades allocated to the traders signed on to Auto-Ex (as a group)*
1	*60%*	*40%*
2	*40%*	*60%*
3 or more	*30%*	*70%*

In addition, for options on Exchange Traded Funds, Trust Issued Receipts and Indexes, the allocation of Auto-Ex trades between the specialist and traders signed on to Auto-Ex is as follows:

[1] 15 U.S.C. 78S(b)(1).

[2] 17 CFR 240.19b–4.

[3] *See* letter from Claire P. McGrath, Senior Vice President and Deputy General Counsel, Amex, to Nancy Sanow, Assistant Director, Division of Market Regulation, Commission, dated November 17, 2003 (''Amendment No. 1''). In Amendment No. 1, Amex made technical corrections to the proposed rule text and amended the purpose section of the proposal to reflect the re-institution of the Exchange-sponsored payment for order flow program.

Number of traders signed on to Auto-Ex	*Approximate number of trades allocated to the specialist*	*Approximate number of trades allocated to the traders signed on to Auto-Ex (as a group)*
1	*60%*	*40%*
2	*40%*	*60%*
3–7	*30%*	*70%*
8 or more	*25%*	*75%*

(ii) Notwithstanding the foregoing, in the event the Exchange establishes a payment for order flow program, in which it collects a fee from the registered options traders, the rotation designed to provide that the allocation of Auto-Ex trades between the specialist and traders signed on to Auto-Ex in a given option class is as follows:

Number of traders signed on to Auto-Ex	*Approximate number of trades allocated to the specialist*	*Approximate number of trades allocated to the traders signed on to Auto-Ex (as a group)*
1	*60%*	*40%*
2–4	*40%*	*60%*
5–7	*30%*	*70%*
8–15	*25%*	*75%*
16 or more	*20%*	*80%*

* * * Commentary

.01 through .03 No change.

* * * * *

Rules of General Applicability

Rule 950

(a) through (c) No change.

(d) The provisions of Rule 126, with the exception of subparagraphs (a) and (b) thereof, shall apply to Exchange option transactions and the following additional commentary shall also apply.

* * * Commentary

.01 through .05 No change.

.06(i)*(A)* When two or more bids (offers) are made simultaneously by the specialist dealing for his own account and by registered options traders, all such bids (offers) shall be on parity and any contracts sold (bought) in execution of such bids (offers) shall be divided among the specialist and registered options trader(s) so that the specialist shall receive the following percentage of contracts executed and the registered options traders shall divide the remainder in accordance with Rule 950(n), Commentary .03(a)(iii)[:]. *The following percentages shall be in effect for equity option classes:*

Number of traders on parity	*Approximate percentage of contracts allocated to the specialist*	*Approximate percentage of contracts allocated to the traders (as a group)*
1	*60*	*40*
2	*40*	*60*
3 or more	*30*	*70*

In addition, the following percentages shall be in effect for options on Exchange Traded Funds, Trust Issued Receipts and Indexes:

Number of traders on parity	*Approximate percentage of contracts allocated to the specialist*	*Approximate percentage of contracts allocated to the traders (as a group)*
1	*60*	*40*
2	*40*	*60*
3–7	*30*	*70*
8 or more	*25*	*75*

Notwithstanding the foregoing, neither the specialist nor a registered options trader will be allocated more executed contracts than the number of contracts representing the specialist's or registered options trader's portion of the aggregate quotation size, as that term is used in Rule 958A, except, when the number of executed contracts to be allocated exceeds the aggregate quotation size disseminated for that options series.

(B) In the event the Exchange establishes a payment for order flow program, in which it collects a fee from the registered options traders, when two or more bids (offers) are made simultaneously by the specialist dealing for his own account and by registered options traders, all such bids (offers) shall be on parity and any contracts sold (bought) in execution of such bids (offers) shall be divided among the specialist and registered options trader(s) so that the specialist shall receive a percentage of the contracts executed and the registered options traders shall divide the remainder in accordance with Rule 950(n), Commentary .03(a)(iii). The following percentages shall be in effect for equity option classes:

Number of traders on parity	*Approximate [number] percentage of contracts allocated to the specialist*	*Approximate [number] percentage of contracts allocated to the traders (as a group)*
1	60	40
2–4	40	60
5–7	30	70
8–15	25	75
16 or more	20	80

Notwithstanding the foregoing, neither the specialist nor a registered options trader will be allocated more executed contracts than the number of contracts representing the specialist's or registered options trader's portion of the aggregate quotation size, as that term is used in Rule 958A, except, when the number of executed contracts to be allocated exceeds the aggregate quotation size disseminated for that options series.

(ii) No change.

.07 *(i)* The Exchange's automated allocation system, known as Quick Trade, when activated for a particular transaction in a given options series, will provide for the automatic allocation on a rotating basis of executed orders to the specialist and participating registered options traders. Executed orders of ten contracts or less are allocated to Quick Trade participants as set forth below. If an executed order is greater than ten contracts, Quick Trade divides the execution into ten or less lots and allocates a lot to each participant. Each lot is considered a separate trade for purposes of allocating trades within Quick Trade. The rotation is designed to provide that the allocation of trades between the specialist and traders signed on to Quick Trade in a given *equity* option [series] *class* is as follows:

Number of traders signed on to quick trade	*Approximate number of trades allocated to the specialist*	*Approximate number of trades allocated to the traders signed on to quick trade (as a group)*
1	*60%*	*40%*
2	*40%*	*60%*
3 or more	*30%*	*70*

In addition, for options on Exchange Traded Funds, Trust Issued Receipts and Indexes, the allocation of trades between the specialist and traders signed on to Quick Trade is as follows:

Number of trades signed on to quick trade	*Approximate number of trades allocated to the specialist*	*Approximate number of trades signed on to quick trade (as a group)*
1	*60%*	*40%*

Number of trades signed on to quick trade	*Approximate number of trades allocated to the specialist*	*Approximate number of trades signed on to quick trade (as a group)*
2	*40%*	*60%*
3–7	*30%*	*70%*
8 or more	*25%*	*75%*

(ii) Notwithstanding the foregoing, in the event the Exchange establishes a payment for order flow program, in which it collects a fee from the registered options traders, the rotation is designed to provide that the allocation of trades between the specialist and traders signed on to Quick Trade in a given option class is as follows:

Number of traders *signed* on to quick trade	Approximate [percentage] *number* of trades allocated to the specialist	Approximate [percentage] *number* of trades allocated to the traders signed on to quick trade (as a group)
1	60%	40%
2–4	40%	60%
5–7	30%	70%
8–15	25%	75%
16 or more	20%	80%

(e) through (p) No change.

* * * * *

II. Self-Regulatory Organization's Statement of the Purpose of, and Statutory Basis for, the Proposed Rule Change

In its filing with the Commission, Amex included statements concerning the purpose of and basis for the proposed rule change and discussed any comments it received on the proposed rule change. The text of these statements may be examined at the places specified in Item IV below. The Exchange has prepared summaries, set forth in Sections A, B, and C below, of the most significant aspects of such statements.

A. Self-Regulatory Organization's Statement of the Purpose of, and Statutory Basis for, the Proposed Rule Change

1. Purpose

On April 24, 2003, the Commission approved amendments to Amex Rules 933 and 950(d), codifying longstanding practices regarding the allocation of options contracts executed on the Exchange and, among other things, setting forth in Commentary .06 to Amex Rule 950(d) allocation ratios by which contracts are divided between registered options traders and specialists on parity.[4] In addition, on May 22, 2002, the Commission approved the implementation of Quick Trade, an automated allocation system activated for particular kinds of transactions that allocates trades between specialists and registered options traders using specific allocation ratios set forth in Amex Rule 950(d), Commentary .07.[5] The Exchange is now proposing to revise the allocation ratios set forth in Amex Rule 933 and in Commentaries .06 and .07 of Amex Rule 950(d), as discussed below, in connection with the re-institution of an exchange-sponsored payment for order flow program.[6]

Recently, the Exchange re-instituted an exchange-sponsored payment for order flow program. The Exchange has traditionally opposed payment for order flow, believing, among other things, that it can create serious conflicts of interest and can compromise a broker's fiduciary obligation to achieve best execution of the broker's customers' orders. However, given the institution of payment for order flow programs at other options exchanges and the continuation of payment for order flow programs by some specialist and market making organizations, the Exchange believes that the re-institution of payment for order flow is necessary to respond to these competitive pressures. Amex represents that most specialists and registered options traders are fundamentally against the practice of payment for order flow, but they recognize its necessity, especially when specialists and market makers at other exchanges engage in the practice using either their own funds or funds provided by their exchange.

The Exchange's re-instituted payment for order flow program collects a marketing fee of $0.40 per contract from both specialists and registered options traders. The Exchange represents that the marketing fee, however, will only be collected on those specialist and registered options trader transactions involving customer orders from firms that accept payment for directing their orders to the Exchange (''payment-accepting firms''). The Exchange also represents that the specialist is solely responsible for negotiating payment for order flow arrangements with payment-accepting firms. Amex asserts that specialists would not be required to negotiate with any payment-accepting firms. Accordingly, the marketing fee would be assessed only on those specialist and registered options trader transactions resulting from orders from customers of payment-accepting firms with whom a specialist has negotiated a payment for order flow arrangement. Amex represents that the current payment for order flow program in place at the Exchange also allows registered options traders to vote to eliminate the program in select classes.[7] The Exchange asserts that a vote to eliminate the marketing fee will result in registered options traders not contributing to the payment for order flow program in some option classes, which in turn will require the specialists in those classes to pay for order flow using their own funds. Amex represents that one issue of concern to the specialists is that, while they pay for order flow out of their own funds, the order flow that is received by the Exchange is shared with the registered options traders who will not be contributing to the payment for order flow program.

While specialists generally receive a larger share of order flow when on parity with registered options traders, the percentages and practices codified in Amex Rule 933 and Commentaries .06 and .07 of Rule 950(d) were established many years ago, and current payment for order flow practices had not been taken into consideration. Given the specialists' concerns, the Exchange has determined that a revision to the percentages set forth in these rules for those options classes in which the Exchange does not collect a payment for order flow marketing fee is appropriate. The Exchange has also determined that the percentages will vary depending on the type of option, whether equity option or option on an Exchange Traded Fund, Trust Issued Receipt, or index. The proposed revised percentages for equity options are set forth below:[8]

[4] *See* Securities Exchange Act Release No. 47729 (April 24, 2003) 68 FR 23344 (May 1, 2003) (approving File No. SR–Amex SR–00–30).

[5] *See* Securities Exchange Act Release No. 45974 (May 22, 2002) 67 FR 37886 (May 30, 2002) (approving File No. SR–Amex–2001–65). The allocation ratios in Commentary .07 to Amex Rule 950(d) are the same as those in Commentary .06.

[6] *See* Securities Exchange Act Release No. 48053 (June 17, 2003), 68 FR 37880 (June 25, 2003) (File No. SR–Amex–2003–50).

[7] *See* Securities Exchange Act Release No. 48577 (September 30, 2003), 68 FR 57943 (October 7, 2003)(File No. SR–Amex–2003–80). The Commission notes that Amex instituted the procedures by which specialists and registered options traders may determine whether to continue to participate in the payment for order flow program on a six-month pilot basis.

[8] Amex is also proposing comparable revisions to the percentages for traders signed on to Quick Trade.

Number of Traders on Parity (or Signed on to Auto-Ex or Quick Trade)	Approximate Percentage of Option Contracts (or Number of Trades on Auto-Ex or Quick Trade) Allocated to the Specialist	Approximate Percentage of Option Contracts (or Number of Trades on Auto-Ex or Quick Trade) Allocated to the Traders (as a group)
1	60%	40%
2	40%	60%
3 or more	30%	70%

The revised percentages for options on ETFs, Trust Issued Receipts, and Indexes are set forth below:

Number of Traders on Parity (or Signed on to Auto-Ex or Quick Trade)	Approximate Percentage of Option Contracts (or Number of Trades on Auto-Ex or Quick Trade) Allocated to the Specialist	Approximate Percentage of Option Contracts (or Number of Trades on Auto-Ex or Quick Trade) Allocated to the Traders (as a group)
1	60%	40%
2	40%	60%
3–7	30%	70%
8 or more	25%	75%

As discussed more fully in Amex's recently approved proposal to codify these percentages, the Exchange believes that it is appropriate to provide a greater participation to specialists since they have responsibilities and are subject to certain costs that registered options traders do not have. Specifically, some of these additional responsibilities and costs include paying for order flow, the fixed staffing costs committed to market making in a particular security whether it is actively traded or not, and the costs associated with participating in educational and marketing functions to attract order flow. However, for those options classes in which the Exchange has a payment for order flow program that collects a fee from registered options traders for the products set forth above, the allocation percentages will revert back to the percentages currently set forth in Amex Rule 933(h)(ii) and Commentaries .06(i)(B) and .07(ii) of Amex Rule 950(d). Finally, the Exchange is taking the opportunity to correct the paragraph reference in Amex Rule 933 from (d) to (h).

2. Statutory Basis

The Exchange believes that the proposed rule change is consistent with section 6(b) of the Act [9] in general and furthers the objectives of section 6(b)(5) of the Act [10] in particular in that it is designed to prevent fraudulent and manipulative acts and practices and to promote just and equitable principles of trade.

B. Self-Regulatory Organization's Statement on Burden on Competition

The Exchange believes that the proposed rule change will impose no burden on competition.

C. Self-Regulatory Organization's Statement on Comments on the Proposed Rule Change Received From Members, Participants, or Others

No written comments were solicited or received with respect to the proposed rule change.

III. Date of Effectiveness of the Proposed Rule Change and Timing for Commission Action

Within 35 days of the date of publication of this notice in the **Federal Register** or within such longer period (i) as the Commission may designate up to 90 days of such date if it finds such longer period to be appropriate and publishes its reasons for so finding or (ii) as to which the Exchange consents, the Commission will:

(A) By order approve such proposed rule change, or

(B) Institute proceedings to determine whether the proposed rule change should be disapproved.

IV. Solicitation of Comments

Interested persons are invited to submit written data, views, and arguments concerning the foregoing, including whether the proposed rule change is consistent with the Act. Persons making written submissions should file six copies thereof with the Secretary, Securities and Exchange Commission, 450 Fifth Street, NW., Washington, DC 20549–0609. Comments may also be submitted electronically at the following e-mail address: *rule-comments@sec.gov*. All comment letters should refer to File No. SR-Amex–2003–44. This file number should be included on the subject line if e-mail is used. To help the Commission process and review comments more efficiently, comments should be sent in hardcopy or by e-mail but not by both methods. Copies of the submission, all subsequent amendments, all written statements with respect to the proposed rule change that are filed with the Commission, and all written communications relating to the proposed rule change between the Commission and any person, other than those that may be withheld from the public in accordance with the provisions of 5 U.S.C. 552, will be available for inspection and copying in the Commission's Public Reference Room. Copies of the filing will also be available for inspection and copying at the principal offices of Amex. All submissions should be submitted by January 21, 2004.

For the Commission, by the Division of Market Regulation, pursuant to delegated authority.[11]

Margaret H. McFarland,

Deputy Secretary.

[FR Doc. 03–32177 Filed 12–30–03; 8:45 am]

BILLING CODE 8010–01–P

[9] 15 U.S.C. 78f(b).

[10] 15 U.S.C. 78f(b)(5).

[11] 17 CFR 200.30–3(a)(12).

SECURITIES AND EXCHANGE COMMISSION

[Release No. 34–48995; File No. SR–Amex–2003–102]

Self-Regulatory Organizations; Notice of Filing and Immediate Effectiveness of Proposed Rule Change and Amendment No. 1 Thereto by the American Stock Exchange LLC To Extend on a Six-Month Pilot Basis the Exchange's Odd-Lot Execution Procedures Applicable to Trading in Nasdaq Securities

December 24, 2003.

Pursuant to section 19(b)(1) of the Securities Exchange Act of 1934 (''Act''),[1] and Rule 19b–4 thereunder,[2] notice is hereby given that on November 21, 2003, the American Stock Exchange LLC (''Amex'' or ''Exchange'') filed with the Securities and Exchange Commission (''Commission'') the proposed rule change as described in items I, II and III below, which items have been prepared by the Exchange. On December 23, 2003, the Amex amended the proposed rule change.[3] The Exchange filed the proposal pursuant to section 19(b)(3)(A) of the Act [4] and Rule 19b–4(f)(6) thereunder,[5] which renders the proposal effective upon filing with the Commission. The Commission is publishing this notice to solicit comments on the proposed rule

[1] 15 U.S.C. 78s(b)(1).

[2] 17 CFR 240.19b–4.

[3] *See* letter from Eric Van Allen, Assistant General Counsel, Amex, to Nancy Sanow, Assistant Director, Division of Market Regulation, Commission, dated December 23, 2003, replacing Form 19b–4 in its entirety (''Amendment No. 1'').

[4] 15 U.S.C. 78s(b)(3)(A).

[5] 17 CFR 240.19b–4(f)(6).

change, as amended, from interested persons.

I. Self-Regulatory Organization's Statement of the Terms of Substance of the Proposed Rule Change

The Amex proposes to amend paragraph (j) of Amex Rule 118 (''Trading in Nasdaq National Market Securities'') and Commentary .05 of Amex Rule 205 (''Manner of Executing Odd-Lot Orders'') that were implemented on a pilot program basis and to extend the pilot program for an additional six-month period ending on June 27, 2004. The text of the proposed rule change is set froth below. Proposed new language is in *italics*, and proposed deletions are in [brackets].

* * * * *

Trading in Nasdaq National Market Securities

Rule 118. (a) through (i) No change.

(j) Odd-Lot Orders—Odd-lot orders in Nasdaq National Market securities shall be executed in the following manner:

(i) Market and Executable Limit Orders—A market or executable limit order shall *be executed* [receive automatic execution], unless otherwise provided herein, at the price of the qualified national best offer (in the case of an order to buy) or qualified national best bid (in the case of an order to sell) in the security at the time the order has been received at the trading post or through the Amex Order File. *An order entered through the Amex Order File shall receive automatic execution at such price.*

All market [and executable limit] odd-lot orders entered prior to the opening of trading of Nasdaq National Market securities on the Exchange shall receive automatic execution at the price of the first round-lot or Part of Round-Lot (PRL) transaction on the Exchange. *Executable limit odd-lot orders entered prior to the opening of trading of Nasdaq National Market securities on the Exchange shall be executed manually at the price of the first round-lot or PRL transaction on the Exchange.*

For purposes of this subparagraph (j)(i), the qualified national best bid or offer for a Nasdaq National Market security shall mean the highest bid and lowest offer, respectively, disseminated (A) by the Exchange or (B) by another market center participating in the Joint Self-Regulatory Organization Plan Governing the Collection, Consolidation and Dissemination of Quotation and Transaction Information for Nasdaq Listed Securities Traded on Exchanges on an Unlisted Trading Privileges Basis (''Plan''); provided, however, that the bid and offer in another such market center will be considered in determining the qualified national best bid or offer in a stock only if (i) the quotation conforms to the requirements of Rule 127 (''Minimum Price Variations''), (ii) the quotation does not result in a locked or crossed market, (iii) the market center is not experiencing operational or system problems with respect to the dissemination of quotation information, and (iv) the bid or offer is ''firm,'' that is, members of the market center disseminating the bid or offer are not relieved of their obligations with respect to such bid or offer under paragraph (c)(2) of Rule 11Ac1–1 pursuant to the ''unusual market'' exception of paragraph (b)(3) of Rule 11Ac1–1.

(ii) Limit Orders; Stop Orders; Stop-Limit Orders; Other Order Types—Unless otherwise provided herein, non-executable limit, stop, and stop limit orders shall be executed in accordance with Rule 205, Parts A(2), A(3), and A(4), respectively. Orders to buy or sell ''at the close'' shall be filled at the price of the closing round-lot sale on the Exchange. An odd-lot order received prior to the close but not filled either before the close or on the close may be filled after the close in accordance with the provisions of Rule 205, Part C(1).

(iii) Non-Regular Way Trades—Non-regular way trades shall be effected in accordance with the provisions of Rule 205, Part C(2).

(iv) Locked and Crossed Market Conditions.

(a) For market and executable limit orders entered after the opening, when the national best bid and offer is in a locked market condition (*i.e.,* the bid and offer are the same), odd-lot buy and sell orders will be executed at that locked market price.

(b) Crossed Market Condition—When a crossed market condition exists (*i.e,* bid higher than offer) and the national best displayed bid is higher than the national best displayed offer by $.05 or less, market [and executable limit] orders will receive automatic execution at the mean of the bid and offer prices. If the mean is in a subpenny increment, the price of execution would be rounded up to the nearest $.01. When the national best displayed bid is higher than the offer by more then $.05, an odd-lot *market* order will not receive automatic execution and is to be executed manually at the time a crossed market condition no longer exists, in accordance either with subparagraph (i) or (iv)(a) of this paragraph (j), as appropriate. *An executable limit order will receive automatic execution at the crossed market national best displayed bid (in the case of an order to sell) or at the crossed market national best displayed offer (in the case of an order to buy).*

(v) No odd-lot differential may be charged on any odd-lot orders, except for non-regular way trades effected under Rule 118 (j)(iii).

(vi) Odd-lot orders in Nasdaq National Market securities are permitted to be marked (''short'') and are acceptable for all order types, and Rule 7, Commentary .02 shall apply to such orders.

(k) No change.

* * * * *

Manner of Executing Odd-Lot Orders

Rule 205

Commentary

.01 through .04 No Change.

.05 Odd-lot orders in Nasdaq National Market securities shall be executed in accordance with Rule 118(j).

* * * * *

II. Self-Regulatory Organization's Statement of the Purpose of, and Statutory Basis for, the Proposed rule Change

In its filing with the Commission, the Amex included statements concerning the purpose of, and the basis for, the proposed rule change, as amended, and discussed any comments it received on the proposed rule change. The text of these statements may be examined at the places specified in item IV below. The Amex has prepared summaries, set forth in sections A, B, and C below, of the most significant aspects of such statements.

A. Self-Regulatory Organization's Statement of the Purpose of, and Statutory Basis for, the Proposed Rule Change

1. Purpose

The Commission approved, and the Exchange implemented, a pilot program for odd-lot order [6] executions in Nasdaq securities transacted on the Exchange pursuant to unlisted trading privileges.[7] Paragraph (j) of Amex rule 118 describes the Exchange's odd-lot execution procedures for Nasdaq securities, and Commentary .05 to Amex Rule 205 references the odd-lot procedures described in Amex rule 118(j).

In connection with the due diligence required for upcoming enhancements to the Exchange's automatic execution procedures for Nasdaq odd-lot orders,

[6] An odd-lot order is an order for less than 100 shares.

[7] *See* Securities Exchange Act Release Nos. 46304 (August 2, 2002), 67 FR 51903 (August 9, 2002) (SR–Amex–2002–56) and 48174 (July 14, 2003), 68 FR 43409 (July 22, 2003) (SR–Amex–2003–56).

the Exchange represents that its staff found inconsistencies between the current automatic execution procedures and the text of Amex Rule 118(j) with respect to certain order types. Accordingly, the Exchange proposes amendments to Amex Rule 118(j) to correct these discrepancies. In addition, the Exchange proposes a six-month extension for the pilot program.

a. Amendments to Odd-Lot Execution Procedures

The Exchange proposes to amend subparagraph (j)(i) of Amex Rule 118 (''Market and Executable Limit Orders'') to state that, after the opening, only odd-lot market orders and executable odd-lot limit orders received through the Amex Order file would be automatically executed at the qualified national best bid or offer. Odd-lot orders received at the trading post (*e.g.,* handled by a floor broker) would be manually executed at the qualified national best bid or offer. Furthermore, the Exchange proposes to amend subparagraph (j)(i) of Amex Rule 118 to state that executable odd-lot limit orders entered before the opening of Exchange trading would be executed manually at the price of the first round-lot or Part of Round Lot (''PRL'') transaction on the Exchange. The Amex represents that, currently, only odd-lot market orders entered before the opening are held in accumulation and receive automatic execution at the price of the first round lot or PRL transaction.

The Exchange also proposes to amend subparagraph (j)(iv)(b) of Amex Rule 118 to more accurately describe the Exchange's odd-lot execution procedures in crossed markets (*i.e.,* where the bid is higher than the offer). In a crossed market, odd-lot market orders, but not executable odd-lot limit orders, would receive automatic executions at the mean of the bid and offer prices when the displayed national best bid is higher than the displayed national best offer by $.05 or less. When the displayed national best bid is higher than the displayed national best offer by more than $.05, odd-lot market orders, but not executable odd-lot limit orders, would be executed manually when the crossed market no longer exists in accordance with subparagraph (j)(i) of Amex Rule 118. Executable odd-lot limit orders would be automatically executed at the crossed market bid price (in the case of an order to sell) or at the crossed market offer price (in the case of an order to buy). For example, if the bid and offer were to be 20.10 and 20.00, respectively, an executable odd-lot sell limit order priced at 20.10 or less would be automatically executed at 20.10, and an executable odd-lot buy limit order priced at 20.00 or higher would be automatically executed at 20.00.

b. Extension of Odd-Lot Pilot Program

In addition to the abovementioned proposed amendments to paragraph (j) of Amex Rule 118, the Exchange seeks an extension of its odd-lot pilot program for an additional six-month period ending on June 27, 2004. The program was originally approved on August 2, 2002, for a six-month period, and was extended on July 14, 2003, for an additional six-month period ending on December 27, 2003.[8] The current odd-lot procedures have operated efficiently, and the Exchange has received no complaints or adverse comments from members or the public regarding odd-lot executions. Accordingly, the Exchange believes that it is appropriate to extend the pilot program.

2. Statutory Basis

The Exchange believes that the proposed rule change, as amended, is consistent with section 6(b) of the Act,[9] in general, and the provisions of section 6(b)(5) of the Act,[10] in particular, in that it is designed to prevent fraudulent and manipulative acts and practices, to promote just and equitable principles of trade, to foster cooperation and coordination with persons engaged in facilitating transactions in securities, to remove impediments to and perfect the mechanism of a free and open market and a national market system, and, in general, to protect investors and the public interest, and is not designed to permit unfair discrimination between customers, issuers, brokers, or dealers.

B. Self-Regulatory Organization's Statement on Burden on Competition

The Exchange does not believe that the proposed rule change, as amended, will impose any burden on competition.

C. Self-Regulatory Organization's Statement on Comments on the Proposed Rule Change Received From Members, Participants, or Others

No written comments were solicited or received with respect to the proposed rule change, as amended.

III. Date of Effectiveness of the Proposed Rule Change and Timing for Commission Action

Because the foregoing proposed rule change, as amended, does not: (1) Significantly affect the protection of investors or the public interest; (ii) impose any significant burden on competition; and (iii) become operative for 30 days from the date on which it was filed, or such shorter time as the Commission may designate if consistent with the protection of investors and the public interest, it has become effective pursuant to section 19(b)(3)(A) of the Act[11] and Rule 19b–4(f)(6)[12] thereunder.[13] At any time within 60 days of the filing of the proposed rule change, as amended, the Commission may summarily abrogate such rule change if it appears to the Commission that such action is necessary or appropriate in the public interest, for the protection of investors, or otherwise in furtherance of the purpose of the Act.[14]

The Amex has requested that the Commission waive the 30-day operative delay. The Exchange represents that its current odd-lot procedures have operated efficiently, and that it has experienced nonoperational problems relating to odd-lot executions in Nasdaq securities under these procedures. Moreover, the Exchange states that it has received no adverse comments from its members or the public regarding such execution procedures, and believes that continued operation of the six-month pilot program beyond December 27, 2003, would continue to provide efficient execution of investors' odd-lot orders.

The Commission believes that waiving the 30-day operative delay is consistent with the protection of investors and the public interest.[15] Acceleration of the operative date will allow the Exchange to continue its pilot odd-lot execution procedures applicable to trading in Nasdaq securities without interruption for an additional six months, expiring on June 27, 2004. For these reasons, the Commission designates the proposal, as amended, to be effective and operative upon filing with the Commission.

In addition, the Commission requests that the Exchange report any problems or complaints from members and the

[8] *See id.*

[9] 15 U.S.C. 78f(b).

[10] 15 U.S.C. 78f(b)(5).

[11] 15 U.S.C. 78s(b)(3)(A).

[12] 17 CFR 240.19b–4(f)(6).

[13] As required under Rule 19b–4(f)(6)(iii), the Exchange provided the Commission with written notice of its intent to file the proposed rule change at least five business days prior to the filing date or such shorter period as designated by the Commission.

[14] For purposes of calculating the 60-day abrogation period, the Commission considers the period to commence on December 23, 2003, the date at which the Exchange filed Amendment No. 1.

[15] For purposes of accelerating the operative date of this proposal, as amended, the Commission has considered the proposed rule's impact on efficiency, competition, and capital formation. 15 U.S.C. 78c(f).

public regarding odd-lot execution procedures applicable to trading Nasdaq securities, and that the Amex submit any proposal to extend, or permanently approve, the pilot at least two months before the expiration of the six-month pilot.

IV. Solicitation of Comments

Interested persons are invited to submit written data, views, and arguments concerning the foregoing, including whether the proposal rule change, as amended, is consistent with the Act. Persons making written submissions should file six copies thereof with the Secretary, Securities and Exchange Commission, 450 Fifth Street, NW., Washington, DC 20549–0609. Comments may also be submitted electronically at the following e-mail address: *rule-comments@sec.gov.* All comments letters should refer to File No. SR–Amex–2003–102. This file number should be included in the subject lien if e-mail is used. To help the Commission process and review your comments more efficiently, comments should be sent in hardcopy or by e-mail but not by both methods. Copies of the submission, all subsequent amendments, all written statements with respect to the proposed rule change that are filed with the Commission, and all written communications relating to the proposed rule change between the Commission and any person, other than those that may be withheld from the public in accordance with the provisions of 5 U.S.C. 552, will be available for inspection and copying in the Commission's Public Reference Room. Copies of such filing will also be available for inspection and copying at the principal office of the Exchange. All submissions should refer to File No. AR–Amex–2003–102 and should be submitted by January 21, 2004.

For the Commission, by the Division of Market Regulation, pursuant to delegated authority.[16]

Margaret H. McFarland,

Deputy Secretary.

[FR Doc. 03–32184 Filed 12–30–03; 8:45 am]

BILLING CODE 8010–01–M

[16] 17 CFR 200.30–3(a)(12).

SECURITIES AND EXCHANGE COMMISSION

[Release No. 34–48990; File No. SR–CBOE–2003–25]

Self-Regulatory Organizations; Order Approving Proposed Rule Change and Amendment Nos. 1, 2, and 3 by the Chicago Board Options Exchange, Inc. Relating to Bid-Ask Differentials

December 23, 2003.

I. Introduction

On June 20, 2003, the Chicago Board Options Exchange, Inc. (''CBOE'' or ''Exchange'') filed with the Securities and Exchange Commission (''Commission''), pursuant to section 19(b)(1) of the Securities Exchange Act of 1934 (''Act''),[1] and Rule 19b–4 thereunder,[2] a proposed rule change to permit, under certain circumstances, a bid-ask differential of no more than $0.50 for options where the bid price is less than $2. The CBOE filed Amendments Nos. 1, 2, and 3 to the proposal on July 3, 2003,[3] September 10, 2003,[4] and October 29, 2003,[5] respectively.

The proposed rule change and Amendment Nos. 1, 2, and 3 were published for comment in the **Federal Register** on November 19, 2003.[6] The Commission received no comments regarding the proposal, as amended. This order approves the proposed rule change, as amended.

II. Description of the Proposal

Currently, the CBOE's rules establish a bid/ask differential of $0.25 for options where the bid price is less than $2.[7] The CBOE proposes to amend CBOE Rule 8.7, ''Obligations of Market Makers,'' to allow the appropriate Market Performance Committee to establish bid-ask differentials that are no more than $0.50 wide (''double-width'') for options where the bid price is less than $2 when the primary market for the underlying security: (1) Reports a trade outside of its disseminated quote, including any Liquidity Quote;[8] or (2) disseminates an inverted quote (together, the ''Triggering Events'').

The double-width relief must terminate automatically when the Triggering Event ceases. In this regard, the CBOE states that it will program its autoquote systems to widen the quote to double the bid-ask differential automatically upon the occurrence of either of the two Triggering Events.[9] The quotes will remain double-width until the Triggering Event ceases, when the CBOE's systems automatically will return the quote to the normal bid-ask differential. Accordingly, if the primary market's quotes invert and the CBOE quotes double-wide, the CBOE's quotes must return to normal width when the underlying market's quotes no longer are inverted. Similarly, if the primary market prints a trade outside of its disseminated quote, the CBOE may quote double-wide until the print is no longer outside of the disseminated quote (*i.e.*, until the quotes move to encompass the previous print or the next print is inside of the disseminated quote).[10] A market maker will be able to utilize the double-width relief only if the market maker has an automated quotation system that returns the market maker's quotes to normal width upon the termination of the Triggering Event.[11] Double-width relief will not be available to market makers who must rely on manual input to restore quote values to normal width.[12]

III. Discussion

The Commission finds that the proposed rule change is consistent with the requirements of the Act and the rules and regulations thereunder applicable to a national securities exchange and, in particular, with the requirements of section 6(b)(5) of the Act,[13] which requires, among other things, that the rules of a national securities exchange be designed to promote just and equitable principles of trade, to remove impediments to and perfect the mechanism of a free and open market and a national market system, and to protect investors and the public interest.[14]

[1] 15 U.S.C. 78s(b)(1).

[2] 17 CFR 240.19b–4.

[3] *See* letter from Steve Youhn, CBOE, to Deborah Flynn, Division of Market Regulation (''Division''), Commission, dated July 2, 2003, and accompanying Form 19b–4 (''Amendment No. 1'').

[4] *See* letter from Steve Youhn, CBOE, to Deborah Flynn, Division, Commission, dated September 9, 2003 (''Amendment No. 2'').

[5] *See* letter from Steve Youhn, CBOE, to Deborah Flynn, Division, Commission, dated October 28, 2003 (''Amendment No. 3'').

[6] *See* Securities Exchange Act Release No. 48771 (November 12, 2003), 68 FR 65330.

[7] *See* CBOE Rule 8.7(b)(iv).

[8] The rules of the NYSE permit the dissemination, in selected securities, of a ''Liquidity Bid'' and a ''Liquidity Offer'' which reflect aggregated NYSE trading interest at a specific price interval below the best bid (in the case of a Liquidity Bid) or at a specific price interval above the best offer (in the case of a Liquidity Offer). See Securities Exchange Act Release No. 47614 (April 2, 2003), 68 FR 17140 (April 8, 2003) (File No. SR–NYSE–2002–55).

[9] *See* Amendment No. 1, *supra* note 3.

[10] *See* Amendment No. 3, *supra* note 5.

[11] *See* Amendment No. 3, *supra* note 5.

[12] *See* Amendment No. 3, *supra* note 5.

[13] 15 U.S.C. 78f(b)(5).

[14] In approving this proposal, the Commission has considered the proposed rule's impact on

Continued

The Commission believes that the proposal to permit CBOE market makers to widen their quotes for options where the bid price is less than $2 under specific and limited circumstances is reasonable because when one of the Triggering Events occurs it may be difficult to accurately price an option based on the security. In addition, the Commission believes that CBOE's proposal to program its systems, or to requires its market makers to program their systems, to automatically widen the quote upon the occurrence of a Triggering Event and to automatically return the quote to its normal bid-ask differential when the Triggering Event ceases should ensure that the double-width relief is only used when permitted under the rule. Accordingly, the Commission believes that the proposal is narrowly tailored to permit quote width relief only in the specific and limited circumstances provided in the proposal.

IV. Conclusion

It is therefore ordered, pursuant to section 19(b)(2) of the Act,[15] that the proposed rule change (SR–CBOE–2003–25), as amended, is approved.

For the Commission, by the Division of Market Regulation, pursuant to delegated authority.[16]

Margaret H. McFarland,

Deputy Secretary.

[FR Doc. 03–32176 Filed 12–30–03; 8:45 am]

BILLING CODE 8010–01–P

efficiency, competition, and capital formation. 15 U.S.C. 78c(f).

[15] 15 U.S.C. 78s(b)(2).

[16] 17 CFR 200.30–3(a)(12).

SECURITIES AND EXCHANGE COMMISSION

[Release No. 34–48982; File No. SR–CHX–2003–17]

Self-Regulatory Organizations; Notice of Filing of Proposed Rule Change and Amendment No. 1 Thereto by the Chicago Stock Exchange, Incorporated Relating to Automatic Quotations

December 23, 2003.

Pursuant to section 19(b)(1) of the Securities Exchange Act of 1934 (the ''Act''),[1] and Rule 19b–4 thereunder,[2] notice is hereby given that on June 16, 2003, the Chicago Stock Exchange, Incorporated (''CHX'' or ''Exchange'') filed with the Securities and Exchange Commission (''SEC'' or ''Commission'') the proposed rule change as described in Items I, II and III below, which Items have been prepared by the Exchange. On November 26, 2003, the Exchange filed Amendment No. 1 to the proposal.[3] The Commission is publishing this notice to solicit comments on the proposed rule change, as amended, from interested persons.

I. Self-Regulatory Organization's Statement of the Terms of Substance of the Proposed Rule Change

The Exchange proposes to delete an interpretation of CHX Article XX, Rule 7, which governs recognized quotations. The text of the proposed rule change is available at the Commission and at the CHX.

II. Self-Regulatory Organization's Statement of the Purpose of, and Statutory Basis for, the Proposed Rule Change

In its filing with the Commission, the CHX included statements concerning the purpose of, and basis for, the proposed rule change and discussed any comments it received regarding the proposal. The text of these statements may be examined at the places specified in Item IV below. The CHX has prepared summaries, set forth in Sections A, B and C below, of the most significant aspects of such statements.

A. Self-Regulatory Organization's Statement of the Purpose of, and Statutory Basis for, the Proposed Rule Change

1. Purpose

The proposed rule change would delete an interpretation of CHX Article XX, Rule 7, which governs recognized quotations, because the Exchange believes that the provision is now obsolete. Specifically, the CHX seeks to delete an interpretation that prohibits specialists from disseminating automatically-generated quotations that are more than $.10 away from the Intermarket Trading System (''ITS'') best bid or offer. This prohibition extends to all Dual Trading System (*i.e.*, listed) issues.[4]

Like many exchanges, the CHX has a functionality, commonly referred to as the ''auto-quote'' functionality, which its specialists may use to generate quotations automatically, based on the best bid or offer disseminated by another market. The auto-quote functionality typically is used by a CHX specialist to generate a quotation when there is no interest in the specialist's book that would be the basis for a quotation by the specialist.[5] When the CHX specialist is in auto-quote mode, CHX Article XX, Rule 7, Interpretation and Policy .02 prohibits the specialist from disseminating automatically-generated quotations that are more than $.10 away from ITS best bid or offer.[6]

Following the securities industry's transition to decimal pricing, the consolidated quotations in the national securities market ''flicker'' significantly throughout each trading day. Because the auto-quote functionality is based on a flickering quotation, quotations generated by the CHX auto-quote functionality correspondingly flicker, potentially resulting in confusion for order-sending firms (and even the specialist himself). Accordingly, the CHX believes that it is appropriate to remove the interpretation that mandates an auto-quote spread of $.10 or less, so that the CHX specialist may utilize the auto-quote functionality (when necessary) to generate a wider or different quotation that will not be subject to incessant flickering.[7]

Significantly, the CHX believes that this change is not only appropriate, but is mandated given recent changes in the way that systems capacity is allocated and paid for in the listed markets. Today, under an amendment to the Consolidated Quotation Association (''CQA'') plan, each listed exchange is required to estimate the systems capacity needs associated with such exchange's anticipated quotation traffic for a given time period. SIAC, as the securities information processor (''SIP'') for the listed markets, then bills each exchange for the systems capacity used by such exchange in disseminating its quotations. To the extent that an exchange exceeds its capacity estimates, the CQA plan provides for potentially significant financial penalties. Excessive quotation traffic is thus not only

[1] 15 U.S.C. 78s(b)(1).

[2] 17 CFR 240.19b–4.

[3] *See* letter from Kathleen M. Boege, Associate General Counsel, CHX, to Nancy J. Sanow, Assistant Director, Division of Market Regulation, Commission, dated November 25, 2003 (''Amendment No. 1''). In Amendment No. 1, the Exchange expanded its discussion regarding the consequences of the proposed rule change, and also clarified that the proposed rule change was filed pursuant to section 19(b)(2) of the Act. 15 U.S.C. 78s(b)(2).

[4] There is no corresponding provision in the CHX rules relating to auto-quoting in Nasdaq/NM securities.

[5] The specialist is required to disseminate a continuous two-sided market in all listed issues pursuant to the terms of the ITS plan. Auto-quoting is a tool that enables a CHX specialist to satisfy this requirement, even when there is no interest in the specialist's book upon which the specialist could base a quotation.

[6] Prior to the securities industry transition to decimal pricing, the interpretation prohibited quotations of more than 1/8 of a point away from the ITS best bid or offer.

[7] For example, the specialist might want to set his or her auto-quote functionality based on the quote in a particular market (such as the market with the tightest spreads).

potentially confusing; it may also operate to the financial detriment of the CHX.

For the foregoing reasons, the CHX believes that it is appropriate to delete Article XX, Rule 7, Interpretation and Policy .02. The CHX anticipates that deletion of the mandatory $.10 auto-quote spread will result in a significant reduction in CHX quotation traffic, which benefits the national market system. Moreover, because the vast majority of the Exchange's automatic executions are based on execution guarantees that supplement the specialist's quotation, the Exchange does not believe that the proposed rule change will have any negative effect on execution prices.[8] In short, the only material consequence of the proposed rule change will be CHX specialist quotations that do not flicker continuously throughout the trading day. The CHX would note that each CHX specialist remains subject to their fundamental obligation to maintain ''fair and orderly markets.''[9] The CHX believes that this obligation will ensure that specialists will not abuse the auto-quote functionality to generate quotations that are useless or disruptive to the national market system.

2. Statutory Basis

The CHX believes the proposal is consistent with the requirements of the Act and the rules and regulations thereunder that are applicable to a national securities exchange, and, in particular, with the requirements of section 6(b).[10] The CHX believes the proposal is consistent with section 6(b)(5) of the Act [11] in that it is designed to promote just and equitable principles of trade, to remove impediments, and to perfect the mechanism of, a free and open market and a national market system, and, in general, to protect investors and the public interest.

B. Self-Regulatory Organization's Statement on Burden on Competition

The Exchange does not believe that the proposed rule change will impose any burden on competition not necessary or appropriate in furtherance of the purposes of the Act.

C. Self-Regulatory Organization's Statement on Comments on the Proposed Rule Change Received from Members, Participants or Others

No written comments were either solicited or received with respect to the proposed rule change, as amended.

III. Date of Effectiveness of the Proposed Rule Change and Timing for Commission Action

Within 35 days of the date of publication of this notice in the **Federal Register** or within such longer period (i) as the Commission may designate up to 90 days of such date if it finds such longer period to be appropriate and publishes its reasons for so finding or (ii) as to which the self-regulatory organization consents, the Commission will:

A. by order approve the proposed rule change, or

B. institute proceedings to determine whether the proposed rule change should be disapproved.

IV. Solicitation of Comments

Interested persons are invited to submit written data, views and arguments concerning the foregoing, including whether the proposed rule change, as amended, is consistent with the Act. Persons making written submissions should file six copies thereof with the Secretary, Securities and Exchange Commission, 450 Fifth Street NW., Washington, DC 20549–0609. Comments may also be submitted electronically at the following e-mail address: *rule-comments@sec.gov.* All comment letters should refer to File No. SR–CHX–2003–17. This file number should be included on the subject line if e-mail is used. To help the Commission process and review comments more efficiently, comments should be sent in hardcopy or by e-mail but not by both methods. Copies of the submission, all subsequent amendments, all written statements with respect to the proposed rule change that are filed with the Commission, and all written communications relating to the proposed rule change between the Commission and any person, other than those that may be withheld from the public in accordance with the provisions of 5 U.S.C. 552, will be available for inspection and copying in the Commission's Public Reference Room. Copies of such filings will also be available for inspection and copying at the principal office of the CHX. All submissions should refer to File No. SR–CHX–2003–17 and should be submitted by January 21, 2004.

For the Commission, by the Division of Market Regulation, pursuant to delegated authority. [12]

Margaret H. McFarland,

Deputy Secretary.

[FR Doc. 03–32173 Filed 12–30–03; 8:45 am]

BILLING CODE 8010–01–P

[8] CHX Article XX, Rule 37(b) requires that orders executed automatically on the CHX be executed at the national best bid or offer in effect at the time the order is received.

[9] See CHX Article XXX, Rule 1, Interpretation and Policy .02.

[10] 15 U.S.C. 78(f)(b).

[11] 15 U.S.C. 78f(b)(5).

[12] 17 CFR 200.30–3(a)(12).

SECURITIES AND EXCHANGE COMMISSION

[Release No. 34–48985; File No. SR–CHX–2003–37]

Self-Regulatory Organizations; Notice of Filing and Immediate Effectiveness of a Proposed Rule Change by the Chicago Stock Exchange, Inc. Relating to ITS Trade-Throughs

December 23, 2003.

Pursuant to section 19(b)(1) of the Securities Exchange Act of 1934 (''Act'') [1] and Rule 19b–4 thereunder,[2] notice is hereby given that on November 26, 2003, the Chicago Stock Exchange, Inc. (''CHX'') filed with the Securities and Exchange Commission (''Commission'') the proposed rule change as described in Items I, II, and III below, which Items have been prepared by the Exchange. The Exchange filed the proposal pursuant to section 19(b)(3)(A) of the Act,[3] and Rule 19b–4(f)(1) [4] thereunder, which renders the proposal effective upon filing with the Commission. The Commission is publishing this notice to solicit comments on the proposed rule change from interested persons.

I. Self-Regulatory Organization's Statement of the Terms of Substance of the Proposed Rule Change

The Exchange proposes to amend certain provisions of CHX Article XX, Rule 40, which incorporates certain provisions of the Intermarket Trading System (''ITS'') Plan (''ITS Plan''). Specifically, the CHX seeks to add Interpretation and Policy .06 to expressly recognize that certain executions will not be considered ''trade-throughs'' if an ITS commitment is sent contemporaneously with the execution of a trade through the bid or offer of another market center.

The text of the proposed rule change is below. Proposed new language is in *italics*.[5]

* * * * *

[1] 15 U.S.C. 78s(b)(1).

[2] 17 CFR 240.19b–4.

[3] 15 U.S.C. 78s(b)(3)(A).

[4] 17 CFR 240.19b–1 4(f)(1).

[5] The Commission made a technical change to the rule text to address a minor error in the proposed

Continued

ITS ''Trade-Throughs'' and ''Locked Markets''

RULE 40. (a) Definitions

(1) An ''Exchange trade-through,'' as that term is used in this Rule, occurs whenever a member on the Exchange initiates the purchase on the Exchange of a security traded through ITS (an ''ITS Security'') at a price which is higher than the price at which the security is being offered (or initiates the sale on the Exchange of such a security at a price which is lower than the price at which the security is being bid for) at the time of the purchase (or sale) in another ITS participating market center as reflected by the offer (bid) then being displayed on the Exchange from such other market center. The member described in the foregoing sentence is referred to in this Rule as the ''member who initiated an Exchange trade-through.''

(2) A ''third participating market center trade-through,'' as that term is used in this Rule, occurs whenever a member on the Exchange initiates the purchase of an ITS Security by sending a commitment to trade through the System and such commitment results in an execution at a price which is higher than the price at which the security is being offered (or initiates the sale of such a security by sending a commitment to trade through the System and such commitment results in an execution at a price which is lower than the price at which the security is being bid for) at the time of the purchase (or sale) in another ITS participating market center as reflected by the offer (bid) then being displayed on the Exchange from such other market center. The member described in the foregoing sentence is referred to in this Rule as the ''member who initiated a third participating market center trade-through.''

* * * * *

Interpretations and Policies:

* * * * *

.06 Contemporaneous Commitments

The terms ''Exchange trade-through'' and ''third market participating market center trade-through'' do not include the situation where a member who initiates the purchase (sale) of an ITS security at a price which is higher (lower) than the price at which the security is being offered (bid) is another ITS participating market, sends contemporaneously through ITS to such ITS participating market a commitment to trade at such offer (bid) price or better and for at least the number of shares displayed with that market center's better-priced offer (bid). A trade-through complaint sent in these circumstances is not valid, even if the commitment sent in satisfaction cancels or expires, and even if there is more stock behind the quote in the other market.

* * * * *

II. Self-Regulatory Organization's Statement of the Purpose of, and Statutory Basis for, the Proposed Rule Change

In its filing with the Commission, the Exchange included statements concerning the purpose of, and basis for, the proposed rule change and discussed any comments it received on the proposed rule change. The text of these statements may be examined at the places specified in Item IV below. The Exchange has prepared summaries, set forth in Sections A, B, and C below, of the most significant aspects of such statements.

A. Self-Regulatory Organization's Statement of the Purpose of, and the Statutory Basis for, the Proposed Rule Change

1. Purpose

The Exchange is a participant in the ITS Plan.[6] Exhibit B to the ITS Plan is a model ITS Trade-Through Rule (the ''Trade-Through Rule''), which provides that a member in one market should avoid initiating a trade if the trade would be executed at a price inferior to a price quoted by another ITS market center.[7]

As a remedy following a trade-through, the ITS Plan provides that (upon receipt of a valid trade-through complaint) the party that initiated the trade-through must send a commitment to trade, at the price and for the number of shares in the disseminated quotation, to satisfy the market that was traded through.

The ITS Operating Committee believes that a member should be able to avoid any trade-through liability when a member sends a commitment at the same time that it trades through the bid or offer in another market. Accordingly, based on the Commission's request for express clarification, the ITS Operating Committee has encouraged each ITS Participant, including the CHX, to expressly recognize that a trade will not be considered an inappropriate trade-through if an ITS commitment is sent contemporaneously with the execution of a trade through the bid or offer of another market center. Accordingly, the CHX is submitting proposed CHX Article XX, Rule 40, Interpretation and Policy .06.

As stated above, the Exchange believes that each ITS participant will propose a similar interpretation. As of the date of submission of this proposed rule change, the Exchange is only aware of a submission by the NYSE, containing proposed rule language identical to that proposed in this submission.

2. Statutory Basis

The CHX believes the proposal is consistent with the requirements of the Act and the rules and regulations thereunder that are applicable to a national securities exchange, and, in particular, with the requirements of section 6(b) of the Act.[8] The CHX believes the proposal is consistent with section 6(b)(5) of the Act,[9] in that it is designed to promote just and equitable principles of trade, to remove impediments, and to perfect the mechanism of, a free and open market and a national market system, and, in general, to protect investors and the public interest.

B. Self-Regulatory Organization's Statement on Burden on Competition

The Exchange does not believe that the proposed rule change will result in any burden on competition.

C. Self-Regulatory Organization's Statement on Comments on the Proposed Rule Change Received From Members, Participants or Others

Written comments were neither solicited nor received.

III. Date of Effectiveness of the Proposed Rule Change and Timing for Commission Action

Because the foregoing proposed rule change constitutes a stated policy,

rule change. Telephone conversation between Kathleen M. Boege, Vice President and Associate General Counsel, CHX, and Ian K. Patel, Attorney, Division of Market Regulation, Commission, dated December 23, 2003.

[6] The ITS Plan was approved on a permanent basis on January 27, 1983. *See* Securities Exchange Act Release No. 19456 (January 27, 1983), 48 FR 4938. Signatories to the ITS Plan include the American Stock Exchange, LLC, the Boston Stock Exchange, Inc., the Chicago Board Options Exchange, Inc., the CHX, the Cincinnati Stock Exchange, Inc. (now known as the National Securities Exchange), the NASD, the New York Stock Exchange, Inc. (''NYSE''), the Pacific Exchange, Inc., and the Philadelphia Stock Exchange, Inc.

[7] Section 8(d)(ii) of the ITS Plan requires each Participant to adopt a rule substantially the same as the Trade-Through Rule. CHX Article XX, Rule 40 is the Exchange's version of the Trade-Through Rule.

[8] 15 U.S.C. 78(f)(b).

[9] 15 U.S.C. 78f(b)(5).

practice or interpretation with respect to the meaning, administration, or enforcement of an existing rule, it has become effective pursuant to section 19(b)(3)(A) of the Act [10] and Rule 19b–4(f)(1) thereunder.[11] At any time within 60 days of the filing of the proposed rule change, the Commission may summarily abrogate such rule change if it appears to the Commission that such action is necessary or appropriate in the public interest, for the protection of investors, or otherwise in furtherance of the purposes of the Act.

IV. Solicitation of Comments

Interested persons are invited to submit written data, views and arguments concerning the foregoing, including whether the proposed rule change is consistent with the Act. Persons making written submissions should file six copies thereof with the Secretary, Securities and Exchange Commission, 450 Fifth Street, NW., Washington, DC 20549–0609. Comments may also be submitted electronically at the following e-mail address: *rule-comments@sec.gov.* All comment letters should refer to File No. SR–CHX–2003–37. This file number should be included on the subject line if e-mail is used. To help the Commission process and review comments more efficiently, comments should be sent in hardcopy or by e-mail but not by both methods. Copies of the submission, all subsequent amendments, all written statements with respect to the proposed rule change that are filed with the Commission, and all written communications relating to the proposed rule change between the Commission and any person, other than those that may be withheld from the public in accordance with the provisions of 5 U.S.C. 552, will be available for inspection and copying at the Commission's Public Reference Room. Copies of such filing will also be available for inspection and copying at the principal office of the CHX. All submissions should refer to the File No. SR–CHX–2003–37 and should be submitted by January 21, 2004.

For the Commission, by the Division of Market Regulation, pursuant to delegated authority.[12]

Margaret H. McFarland,

Deputy Secretary.

[FR Doc. 03–32178 Filed 12–30–03; 8:45 am]

BILLING CODE 8010–01–P

[10] 15 U.S.C. 78s(b)(3)(A).

[11] 17 CFR 240.19b–4(f)(1).

[12] 17 CFR 200.30–3(a)(12).

SECURITIES AND EXCHANGE COMMISSION

[Release No. 34–48991; File No. SR–NASD–2003–44]

Self-Regulatory Organizations; Order Granting Approval to Proposed Rule Change and Amendment Nos. 1 and 2 Thereto and Notice of Filing and Order Granting Accelerated Approval to Amendment No. 3 Thereto by the National Association of Securities Dealers, Inc. To Modify an Existing Pilot Program Relating to the Bid Price Test of the Nasdaq Maintenance Listing Standards

December 23, 2003.

I. Introduction

On March 18, 2003, the National Association of Securities Dealers, Inc. (''NASD''), through its subsidiary, the Nasdaq Stock Market, Inc. (''Nasdaq''), filed with the Securities and Exchange Commission (''Commission'') a proposed rule change to modify an existing pilot program relating to the bid price test of Nasdaq's maintenance listing standards. Nasdaq submitted amendments to the proposed rule change on March 24, 2003,[1] and September 26, 2003.[2] On October 10, 2003, the Commission published notice of the proposal in the **Federal Register**.[3] No comments were received on the proposed rule change. On November 26, 2003, Nasdaq submitted Amendment No. 3 to the proposed rule change.[4] This notice and order solicits comment on Amendment No. 3 and approves the proposed rule change, as amended, on an accelerated basis.

II. Description of the Proposal

To obtain a listing on the Nasdaq Stock Market, an issuer must meet the initial listing standards; to keep a listing on Nasdaq, an issuer must meet the maintenance listing standards on an ongoing basis.[5] One of these standards relates to the bid price of the issuer's security. On either the Nasdaq National Market or the SmallCap Market, the security must maintain a bid price of at least $1.00 or face delisting.[6] Nasdaq's listing rules provide that a failure to meet the bid price standard exists if the bid price remains less than $1.00 for 30 consecutive business days.[7] After 30 consecutive business days of the security failing the bid price test, Nasdaq would notify the issuer of the deficiency.[8] Nasdaq's listing rules would then provide for certain ''grace periods'' during which the issuer is expected to regain compliance with the bid price standard or be delisted.

On the Nasdaq SmallCap Market, an issuer that fails the bid price test automatically receives a 180-calendar-day grace period.[9] An issuer need not meet any special requirements to qualify for this grace period. If the issuer still fails the bid price test at the end of the 180 days,[10] it could be granted an additional 180-day grace period if it meets one of the quantitative initial listing standards (rather than the lesser maintenance standards) of the SmallCap Market.[11] If the issuer were still deficient at the end of the second 180-day grace period, it could be granted an additional 90-calendar-day grace period if the issuer again meets one of the quantitative initial listing standards of the SmallCap Market. At the end of the 90 days (or of any other grace period where the issuer does not qualify for an additional grace period), Nasdaq would delist the security, subject to the procedural requirements of the NASD Rule 4800 Series. Thus, Nasdaq's maintenance listing standards currently allow a SmallCap issuer a theoretical maximum of approximately 1.25 years of non-compliance with the bid price standard before facing delisting.

On the Nasdaq National Market, like on the SmallCap Market, an issuer that fails the bid price test would automatically receive a 180-calendar-day grace period without having to meet

[1] *See* letter from Sara Nelson Bloom, Associate General Counsel, Nasdaq, to Katherine A. England, Division of Market Regulation, Commission, dated March 21, 2003 (''Amendment No. 1''). In Amendment No. 1, Nasdaq made minor revisions to the original proposal.

[2] *See* letter from Edward S. Knight, Executive Vice President, Nasdaq, to Katherine A. England, Division of Market Regulation, Commission, dated September 25, 2003 (''Amendment No. 2''). In Amendment No. 2, Nasdaq revised the length of the grace periods available to issuers not in compliance with the bid price test and added to the criteria that issuers would have to meet to avail themselves of such periods.

[3] *See* Securities Exchange Act Release No. 48592 (October 3, 2003), 68 FR 58732.

[4] *See* letter from Sara Nelson Bloom, Associate General Counsel, Nasdaq, to Katherine A. England, Division of Market Regulation, Commission, dated November 25, 2003. In Amendment No. 3, Nasdaq made minor revisions to the proposal.

[5] *See* NASD Rules 4300 *et seq.* and 4400 *et seq.*

[6] *See* NASD Rule 4310(c)(4) (for SmallCap); NASD Rules 4450(a)(5) and (b)(4) (for National Market).

[7] *See* NASD Rule 4310(c)(8)(D) (for SmallCap); NASD Rule 4450(e)(2) (for National Market).

[8] *See id.*

[9] *See* NASD Rule 4310(c)(8)(D).

[10] An issuer is deemed to be back in compliance with the bid price standard if it maintains a bid price of over $1 for ten consecutive business days, *see id.,* although Nasdaq in its discretion may extend the ten-day requirement to as long as 20 consecutive business days, *see id.*

[11] *See id.* (requiring issuer to meet any of the three criteria for initial listing set forth in NASD Rule 4310(c)(2)(A)).

any special requirements.[12] If the issuer still fails the bid price test at the end of the 180 days, it could be granted an additional 180-day grace period if it meets one of the quantitative initial listing standards (rather than the lesser maintenance standards) of the National Market.[13] If an issuer were still deficient at the end of the second 180-day grace period (or does not qualify for the second 180-day grace period), Nasdaq could delist the security, subject to the procedural requirements of the NASD Rule 4800 Series. Thus, Nasdaq's maintenance listing standards currently allow a National Market issuer a theoretical maximum of approximately 1.0 years of non-compliance with the bid price test before facing delisting. A National Market security that meets the maintenance listing standards for the SmallCap Market could ''phase down'' to the SmallCap Market to take advantage of the additional grace period offered there.[14]

The second 180-day grace period and the additional 90-day grace period on the SmallCap Market were established by pilot rules adopted by Nasdaq in February 2002 and modified in March 2003.[15] Also as part of the pilot program, Nasdaq extended the first grace period on the National Market from 90 days to 180 days and established the second 180-day grace period.[16] This pilot program expires on December 31, 2004.

Nasdaq has committed to study the effect of these changes to the maintenance listing standards during the pilot period.[17]

Nasdaq is now proposing to amend the pilot program by further extending the bid price grace periods. For the National Market, Nasdaq would provide an issuer with a third 180-calendar-day grace period if, at the end of the second 180-day period, the issuer meets all of the initial listing standards of the National Market (except for the bid price test).[18] Thus, a National Market issuer could fail the bid price test for a theoretical maximum of approximately 1.5 years before being delisted. For the SmallCap Market, Nasdaq would replace the current 90-day grace period (which comes after the two 180-day grace periods), with a grace period that would last up to the issuer's next shareholder meeting,[19] provided four conditions are met: (1) The issuer meets all of the initial listing standards for the SmallCap Market (other than the bid price test); (2) the shareholder meeting is scheduled to occur no later than two years from the original notification of the bid price deficiency; (3) the issuer obtains shareholder approval at the meeting to carry out the reverse stock split; and (4) the issuer executes the reverse stock split promptly after the shareholder meeting. If the issuer fails to timely propose, obtain approval for, or promptly execute the reverse stock split, Nasdaq would immediately institute delisting proceedings. Thus, Nasdaq's proposal would allow SmallCap issuers to fail the bid price test for a theoretical maximum of 2.0 years before being delisted.[20]

In addition, Nasdaq is proposing to amend the second of the two 180-day grace periods in the SmallCap Market by requiring that an issuer, at the end of the first 180-day period, meet all of the initial listing requirements to the SmallCap Market before entering the second grace period. Currently, the issuer need meet only one of the quantitative initial listing requirements of the SmallCap Market to receive the second grace period. The first 180-day grace period would continue to be available without any stipulations.

Special provisions would apply during the transition period between the old and new rules. An issuer currently in the delisting process for bid price deficiency could avail itself of any grace period to which it would have been entitled had the new pilot rules been in effect when the issuer received the original notification of the deficiency.[21] Furthermore, upon Commission approval of the new pilot rules, an issuer that is currently using a grace period offered by the old rules could remain listed for the duration of the period even though such period would be eliminated under the new rules. For example, a SmallCap issuer currently in the final 90-day grace period under the old rules would be permitted to maintain its listing on the SmallCap Market at least until the end of this period. At the end of the 90 days, the issuer could avail itself of the new rules and remain listed up to its next shareholder meeting, provided that it meets all of the initial listing criteria of the SmallCap Market (except the bid price test) and commits to seek shareholder approval for a reverse stock split, receives such approval, and promptly thereafter carries out the reverse stock split. However, in no event would a SmallCap issuer be afforded a cumulative grace period longer than two years from the date of the notification of the original bid price deficiency, absent ''extraordinary circumstances.''[22]

This proposal would not change the termination date of the pilot program. The pilot program will expire on December 31, 2004.

Finally, Nasdaq is proposing to amend NASD Rule 4820(a) to reference

[12] *See* NASD Rule 4450(e)(2).

[13] *See id.* (requiring issuer to meet the criteria for initial listing set forth in NASD Rules 4420(a)(1) and (5), Rule 4420(b)(1), or 4420(c)(6)).

[14] *See* NASD Rule 4450(i).

[15] *See* Securities Exchange Act Release No. 45387 (February 4, 2002), 67 FR 6306 (February 11, 2002) (SR–NASD–2002–13); Securities Exchange Act Release No. 47482 (March 11, 2003), 68 FR 12729 (March 17, 2003) (SR–NASD–2003–34).

[16] *See id.*

[17] *See* letter from Sara Nelson Bloom, Nasdaq, to Katherine A. England, Division of Market Regulation, Commission, dated January 31, 2002; letter from Florence Harmon, Division of Market Regulation, Commission, to Sara Nelson Bloom, Nasdaq, dated April 4, 2003.

[18] Under the proposal, the conditions relating to the first two 180-day grace periods would remain unchanged. The first 180-day grace period would be automatic; the second 180-day grace period would be available only if the issuer meets one (as opposed to all) of the quantitative initial listing requirements for the National Market.

[19] As originally proposed, the second year of the grace period would have lasted until the next *annual* shareholder meeting of the issuer. In Amendment No. 3, Nasdaq deleted the word ''annual'' and clarified that the shareholder meeting at which the reverse stock split is approved could be a special meeting rather than a regular annual meeting.

[20] In most cases, a SmallCap issuer would have a grace period of less than the two full years that is theoretically available. This can be demonstrated with the following example. Assume a SmallCap issuer receives an initial notice of bid price deficiency from Nasdaq on October 16, 2004. The issuer uses the first and the second 180-day grace periods, so the date is now October 11, 2005 (*i.e.*, 360 days after October 16, 2004). Assume further that the issuer's annual shareholder meeting is scheduled to occur on November 16, 2005. Although there is a theoretical maximum grace period of two years, the grace period in this case would extend only to November 16, 2005—a total of one year and one month. Now assume instead that the issuer holds its next annual shareholder meeting on October 10, 2006. The third grace period, therefore, could last until this annual meeting, if there is no intervening shareholder meeting. However, if there is a special shareholder meeting before October 10, 2006, authorization for the reverse stock split *must* be obtained at that meeting, because the pilot rule provides that the third grace period for the SmallCap Market extends only until the *next* shareholder meeting in the two-year window, not a shareholder meeting of the issuer's choosing. See e-mail from Sara Bloom, Nasdaq, to Michael Gaw, Division of Market Regulation, Commission, dated December 9, 2003.

[21] Nasdaq has stated that, during the pendency of this rule proposal, panels convened pursuant to the NASD Rule 4800 Series to consider delistings have been granting exemptions from the bid price rules consistent with the new pilot grace periods.

[22] Existing NASD Rule 4810(b) provides that Nasdaq may grant exceptions to its listing rules. In Amendment No. 3, Nasdaq clarified that it would be unwilling to exercise this discretion to allow a SmallCap issuer to maintain its listing beyond two years from the date of the notification of the original bid price deficiency, absent ''extraordinary circumstances.'' Nasdaq stated that adverse financial developments affecting the issuer would not support a finding of ''extraordinary circumstances.'' Rather, the term ''extraordinary circumstances'' is intended to refer to a *force majeure* event that, in the opinion of Nasdaq, makes it impossible for the issuer to effect the actions necessary to achieve compliance within the specified compliance period.

the ''Staff Warning Letter'' described in the proposed amendments to paragraph (e)(2) of NASD Rule 4450 and to make other minor, technical revisions.

III. Discussion

A. Approval of Revised Pilot Program

The Commission finds that the proposed rule change, as amended, is consistent with the requirements of the Act and the regulations thereunder applicable to the NASD.[23] In particular, the Commission believes that the proposal is consistent with Section 15A(b)(6) of the Act.[24] Section 15A(b)(6) requires, among other things, that the rules of a national securities association be designed to prevent fraudulent and manipulative acts and practices; to promote just and equitable principles of trade; to remove impediments to and perfect the mechanism of a free and open market and a national market system; and, in general, to protect investors and the public interest.

During the 1980s, there was widespread concern about the occurrence of so-called penny stock fraud which prompted Congress to enact the Securities Enforcement Remedies and Penny Stock Reform Act of 1990.[25] This legislation provided the Commission with expanded authority to regulate the market in securities with a low bid price. In light of these developments and that fact that the provisions of the Penny Stock Reform Act do not apply to any security listed on Nasdaq, the Commission in January 1990 wrote the NASD urging it to carefully scrutinize Nasdaq listing applications to ensure that low-priced securities fully complied with all applicable standards.[26] Nasdaq responded with a proposal to raise its listing standards by, among other things, adopting for the first time a requirement that an issuer maintain a minimum bid price. In its September 1991 approval order for that proposal, the Commission noted that there were two competing interests present. First, small, thinly capitalized companies had an interest in listing on Nasdaq to further their efforts to raise capital and grow their businesses. Second, Nasdaq had an interest in preventing suspect issuers from evading the Penny Stock Reform Act by allowing them to list on Nasdaq.[27] More broadly, Nasdaq has an interest in establishing and maintaining investor confidence in the quality of securities that it allows to trade on its market. Nasdaq's listing regime is an ongoing effort to balance these two considerations, particularly with respect to the SmallCap Market, which is designed to allow smaller companies access to the capital markets.

Nasdaq's original bid price rules allowed a perpetual exemption from the $1 bid price minimum if the issuer met heightened requirements for the market value of its public float and for the amount of capital and surplus.[28] In 1997, Nasdaq proposed to eliminate this alternative method of compliance, providing several reasons for doing so. First, Nasdaq believed that removing the exemption and enforcing a maintenance standard of a $1 bid price for all Nasdaq issuers would ''provide a safeguard against certain market activity associated with low-priced securities.'' [29] Second, Nasdaq pointed out that, when the exemption was adopted, it was intended to address ''temporary adverse market conditions,'' not to create a permanent means of meeting the listing standards.[30] Third, Nasdaq believed that ''a $1 minimum bid price would serve to increase investor confidence and the credibility of its market commensurate with its increased prominence.'' [31]

Nasdaq's present proposal is in some ways a return to the alternate standard that was in effect from 1991 to 1997 since, under both regimes, an issuer can remain listed on Nasdaq if it meets heightened quantitative standards. Although the Commission found the alternate standard to be consistent with the Act in its 1991 approval order, the Commission now shares the concerns that prompted Nasdaq to rescind the alternative standard in 1997. An investor who purchases a security on the Nasdaq Stock Market should have reason to assume that the security has met all of the minimum standards to obtain a listing there, including the bid price standard. Moreover, as Nasdaq observed in 1997, enforcing a minimum bid price helps deter abusive market activity sometimes associated with low-priced, thinly capitalized securities. The Commission agrees with the NASD's 1997 statement that the $1 minimum bid price generally ''serve[s] to increase investor confidence and the credibility of its market.''[32]

Furthermore, the Commission echoes Nasdaq's concern in rescinding the alternate standard that derogations from the bid price standard are meant to address ''temporary adverse market conditions.'' The Commission agrees with Nasdaq that ''at times companies experience temporary adverse market conditions that cause the share price of their security to fall below $1 without having a serious impact on the health or viability of the company.''[33] On that basis, the Commission was able to approve the alternate standard of compliance that allowed for the original, indefinite exemption from the bid price test. Nevertheless, an issuer should not be permitted to rely for an extended period of time on an exemption premised on ''*temporary* adverse market conditions.'' The Commission is concerned that the length of the grace periods for bid price deficiency in this case raises concerns about investor protection. Transparency is one of the fundamental aspects of any set of listing standards. If a listing standard is suspended for too long, the standard is not transparent and the investor protection principles underlying the listing standards could be compromised.

Despite these concerns, the Commission does not presently have reason to believe that Nasdaq's proposal is inconsistent with the Act. The present proposal differs from the earlier alternative to the bid price test in that the grace periods now are only temporary (up to 2.0 years for the SmallCap Market and 1.5 years for the National Market), whereas under the old rules an issuer that met the heightened quantitative standards could keep its listing indefinitely despite a bid price below $1. The present proposal also requires issuers that fail the bid price test to meet all of the initial listing criteria (except for the bid price test), whereas the old rules required issuers to meet just two heightened quantitative criteria (market value of the public float and amount of capital and surplus). These additional requirements that an issuer must meet to qualify for the grace periods should offer additional

[23] In approving the proposed rule change, the Commission has considered its impact on efficiency, competition, and capital formation. *See* 15 U.S.C. 78c(f).

[24] 15 U.S.C. 78o-3(b)(6).

[25] Pub. L. 101–429, 104 Stat. 931 (October 15, 1990).

[26] *See* Securities Exchange Act Release No. 29638 (August 30, 1991), 56 FR 44108, 44109 (September 6, 1991) (approval of SR–NASD–90–18) (''1991 Approval'').

[27] *See* 1991 Approval, 56 FR at 44111.

[28] *See* Securities Exchange Act Release No. 38469 (April 2, 1997), 62 FR 17262, 17262, 17268 (April 9, 1997) (proposing SR–NASD–97–16) (''1997 Proposal'') (showing 1991 rules providing exemption from bid price maintenance standard). For the SmallCap Market, an issuer could use the exemption if the market value of its public float was at least $1 million and it had capital and surplus of at least $2 million. For the National Market, an issuer could use the exemption if the market value of its public float was at least $3 million and it had capital and surplus of at least $4 million.

[29] 1997 Proposal, 62 FR at 17269.

[30] *Id.*

[31] *Id.*

[32] 1997 Proposal, 62 FR at 17269.

[33] 1991 Approval, 56 FR at 44111.

reassurance that the issuer remains a viable business vehicle despite its low bid price.

Nasdaq has provided the Commission with a discussion of its surveillance program for securities that fall below a $1 bid price. The Commission believes that this program, designed to detect fraudulent and abusive trading activity, should further the protection of investors and the public interest.

For these reasons, the Commission is approving this pilot proposal for extending the bid price grace periods. As noted above, Nasdaq previously has committed to study the effect of the pilot changes to its maintenance listing standards.[34] This data will be essential in analyzing—if and when Nasdaq seeks permanent approval for the rules allowing bid price grace periods—whether derogations from the bid price standards undermine the principles of the Act as they are reflected in Nasdaq's listing rules. Previously, the Commission required that Nasdaq submit the study six months prior to the expiration of the pilot (*i.e.*, by June 30, 2004).[35] However, because only 12 months remain in the pilot period, the Commission now believes that it would be appropriate to allow Nasdaq to submit the study three months prior to the expiration of the pilot (*i.e.*, by September 30, 2004). In view of its concerns about the potential for manipulation in the market for low-priced, thinly capitalized securities, the Commission believes that it would be difficult to permit any extension of the pilot provisions without first analyzing the results of Nasdaq's study.[36]

B. Accelerated Approval of Amendment No. 3

Pursuant to Section 19(b)(2) of the Act,[37] the Commission finds good cause for approving the proposal, as revised by Amendment No. 3, prior to the thirtieth day after the date that the notice of the amended proposal was published in the **Federal Register**. No comments were received on the original proposal, and the Commission believes that Amendment No. 3 does not materially alter the proposal and is intended only to make certain technical clarifications. Accordingly, the Commission is accelerating approval of the proposal, as amended.

IV. Text of Amendment No. 3

In Amendment No. 3, Nasdaq proposed further amendments to NASD Rule 4310(c), noted below. The base text is that proposed in Amendment No. 2 (*i.e.*, how the rule would appear if only Amendment No. 2 were approved by the Commission). Changes made by Amendment No. 3 are in italic; deletions are in brackets.

* * * * *

4310. Qualification Requirements for Domestic and Canadian Securities

To qualify for inclusion in Nasdaq, a security of a domestic or Canadian issuer shall satisfy all applicable requirements contained in paragraphs (a) or (b), and (c) hereof.

(a)–(b) No change.

(c) In addition to the requirements contained in paragraph (a) or (b) above, and unless otherwise indicated, a security shall satisfy the following criteria for inclusion in Nasdaq:

(1)–(7) No change.

(8)(A)–(C) No change.

(D) A failure to meet the continued inclusion requirement for minimum bid price on The Nasdaq SmallCap Market shall be determined to exist only if the deficiency continues for a period of 30 consecutive business days. Upon such failure, the issuer shall be notified promptly and shall have a period of 180 calendar days from such notification to achieve compliance. If the issuer has not been deemed in compliance prior to the expiration of the 180 day compliance period, it shall be afforded an additional 180 day compliance period, provided, that on the 180th day of the first compliance period, the issuer demonstrates that it meets the criteria for initial inclusion set forth in Rule 4310(c) (except for the bid price requirement set forth in Rule 4310(c)(4)) based on the issuer's most recent public filings and market information. If the issuer has publicly announced information (*e.g.*, in an earnings release) indicating that it no longer satisfies the applicable initial inclusion criteria, it shall not be eligible for the additional compliance period under this rule.

[If on the 180th day of the second compliance period, the issuer has not been deemed in compliance during such compliance period but it satisfies the criteria for initial inclusion set forth in Rule 4310(c) (except for the bid price requirement set forth in Rule 4310(c)(4)), the issuer shall be provided with an additional compliance period up to its next annual shareholder meeting, provided: the issuer commits to seek shareholder approval for a reverse stock split to address the bid price deficiency at or before its next annual meeting, and to promptly thereafter effect the reverse stock split; and the shareholder meeting to seek such approval is scheduled to occur no later than two years from the original notification of the bid price deficiency. If the issuer fails to timely propose, or obtain approval for, or promptly execute the reverse stock split, Nasdaq shall immediately institute delisting proceedings upon such failure.] *If on the 180th day of the second compliance period, the issuer has not been deemed in compliance during such compliance period but it satisfies the criteria for initial inclusion set forth in Rule 4310(c) (except for the bid price requirement set forth in Rule 4310(c)(4)), the issuer shall be provided with an additional compliance period up to its next shareholder meeting scheduled to occur no later than two years from the original notification of the bid price deficiency, provided the issuer commits to seek shareholder approval at that meeting for a reverse stock split to address the bid price deficiency. If the issuer fails to timely propose, or obtain approval for, or promptly execute the reverse stock split, Nasdaq shall immediately institute delisting proceedings upon such failure.* Compliance can be achieved during any compliance period by meeting the applicable standard for a minimum of 10 consecutive business days.

* * * * *

Amendment No. 3 clarifies that the shareholder meeting referred to in the proposed changes to NASD Rule 4310(c)(8)(D) need not be the annual shareholder meeting, but could also be a special shareholder meeting. A special meeting could be called for the express purpose of seeking shareholder approval for a reverse stock split to cure the issuer's bid price deficiency within the grace period allowed by proposed NASD Rule 4310(c)(8)(D). Nasdaq noted in Amendment No. 3 that, in some circumstances, the next annual meeting could fall outside the two-year deadline for such action and a special meeting would therefore be required.

Amendment No. 3 also clarifies the meaning of the term ''extraordinary circumstances'' used in regard to whether Nasdaq would exercise its discretion under NASD Rule 4810(b) to grant additional exceptions to its bid price maintenance standard.

Amendment No. 3 can be obtained from the Commission's Public Reference Room or from the principal offices of Nasdaq.

[34] *See supra* note 17.

[35] *See* letter from Florence Harmon, Division of Market Regulation, Commission, to Sara Nelson Bloom, Nasdaq, dated April 4, 2003.

[36] In addition, following issuance of this approval order, staff of the Commission's Division of Market Regulation will send a letter to Nasdaq setting forth in more detail the data that Nasdaq should provide in its study.

[37] 15 U.S.C. 78s(b)(2).

V. Solicitation of Comments on Amendment No. 3

Interested persons are invited to submit written data, views, and arguments on Amendment No. 3, including whether the amendment is consistent with the Act. Persons making written submissions should file six copies thereof with the Secretary, Securities and Exchange Commission, 450 Fifth Street, NW., Washington, DC 20549–0609. Comments also may be submitted electronically at the following e-mail address: *rule-comments@sec.gov.* All comments should refer to File No. SR–NASD–2003–44. This file number should be included on the subject line if e-mail is used. To help the Commission process and review comments more efficiently, comments should be sent in hardcopy or by e-mail but not by both methods. Copies of the submission, all subsequent amendments, all written statements with respect to the proposed rule change that are filed with the Commission, and all written communications relating to the proposed rule change between the Commission and any person, other than those that may be withheld from the public in accordance with the provisions of 5 U.S.C. 552, will be available for inspection and copying in the Commission's Public Reference Room. Copies of such filing will also be available for inspection and copying at the principal office of Nasdaq. All submissions should refer to File No. SR–NASD–2003–44 and should be submitted by January 21, 2004.

VI. Conclusion

It is therefore ordered, pursuant to section 19(b)(2) of the Act,[38] that the proposed rule change (SR–NASD–2003–44) and Amendment Nos. 1 and 2 are approved, and that Amendment No. 3 is approved on an accelerated basis.

For the Commission, by the Division of Market Regulation, pursuant to delegated authority.[39]

Jill M. Peterson,

Assistant Secretary.

[FR Doc. 03–32171 Filed 12–30–03; 8:45 am]

BILLING CODE 8010–01–P

[38] *Id.*

[39] 17 CFR 200.30–3(a)(12).

SECURITIES AND EXCHANGE COMMISSION

[Release No. 34–48969; File No. SR–NASD–2003–07]

Self-Regulatory Organizations; Order Granting Approval of Proposed Rule Change by the National Association of Securities Dealers, Inc. To Amend Rules 1011, 1014 and 1017

December 22, 2003.

On January 17, 2003, the National Association of Securities Dealers, Inc. (''NASD''), filed with the Securities and Exchange Commission (''Commission''), pursuant to section 19(b)(1) of the Securities Exchange Act of 1934 (''Act''),[1] and Rule 19b–4 thereunder,[2] a proposed rule change to amend NASD Rules 1011, 1014 and 1017. On September 17, 2003, NASD filed Amendment No. 1 to the proposed rule change.[3] On October 16, 2003, NASD filed Amendment No. 2 to the proposed rule change.[4] Notice of the proposed rule change, as amended, was published for comment in the **Federal Register** on October 23, 2003.[5] No comments were received on the proposed rule change. This order approves the proposed rule change.

In brief, NASD would amend certain of its rules that govern applications for NASD membership and applications for approval of changes in business structure by NASD members. Currently, NASD Rule 1014 delineates certain factors, such as pending or past regulatory actions, that NASD may consider in assessing an applicant's ability to comply with applicable law and regulations, NASD rules, and just and equitable principles of trade. Furthermore, Rule 1017 requires existing NASD members to apply to NASD for approval of continued membership in the event of certain changes to their ownership, control or business operations. In reviewing such applications, NASD staff also considers the factors listed in Rule 1014. NASD asserts that it has proposed these changes in order to strengthen its ability to protect investors with pending claims, awards or judgments against NASD members, and to otherwise detect and prevent misconduct.

[1] 15 U.S.C. 78s(b)(1).

[2] 17 CFR 240.19b–4.

[3] *See* letter from Kosha K. Dalal, Assistant General Counsel, NASD, to Katherine England, Assistant Director, Division of Market Regulation, Commission, dated September 16, 2003.

[4] *See* letter from Kosha K. Dalal, Assistant General Counsel, NASD, to Katherine England, Assistant Director, Division of Market Regulation, Commission, dated October 15, 2003.

[5] *See* Securities Exchange Act Release No. 48651 (October 17, 2003), 68 FR 60750 (''Notice'').

Accordingly, NASD would modify Rule 1017(a)(3) regarding when a member must request approval of a disposition of assets. The rule currently requires an NASD member to file an application for an ''acquisition of substantially all of the member's assets, unless the acquiring member is a member of the New York Stock Exchange, Inc. [NYSE].'' NASD would amend Rule 1017(a)(3) in three ways. First, it would add that transfers of a firm's assets, and not only acquisitions, would require approval. Second, NASD would require approval of a transfer unless *both* parties to the transaction, and not just the acquiring party, are members of the NYSE. Third, NASD would change the amount of a transfer that requires a request for approval from ''substantially all'' of the member's assets to ''25% or more in the aggregate of the member's assets or any asset, business or line of operation that generates revenues comprising 25% or more in the aggregate of the member's earnings measured on a rolling 36-month basis.''

NASD would also modify the factors listed in Rule 1014 that it considers in reviewing applications for membership and continued membership by adding pending arbitrations or civil actions against the applicant, as well as unpaid arbitration awards, or other adjudicated customer awards against the applicant and other persons who may have significant control or influence over the applicant. Such other persons would include the applicant's controlling persons, principals, registered representatives, other Associated Persons, any lender of 5% or more of the applicant's net capital, and any other member with respect to which these persons were a controlling person or a 5% lender of the applicant's net capital.

In addition, NASD's proposal would provide for a rebuttable presumption that an application for membership or continued membership should be denied when an analysis of the applicant's history reveals any one of the negative events enumerated in Rule 1014(a)(3)(A), (C), (D) and (E).[6] An applicant could overcome this presumption by demonstrating that it could nevertheless meet NASD's membership standards.

Finally, for purposes of its rules governing the above-described application processes, NASD would amend its definition of ''Associated Person.'' The term, as defined in Rule 1011(b), would be amended to bring

[6] *See* Notice, 68 FR at 60751.

non-natural controlling persons within the scope of its coverage.

The Commission finds that the proposed rule change is consistent with the requirements of the Act and the rules and regulations thereunder applicable to a national securities association.[7] Specifically, the Commission finds that the proposal is consistent with section 15A(b)(6) of the Act,[8] which requires, among other things, that NASD's rules be designed to prevent fraudulent and manipulative acts and practices, to promote just and equitable principles of trade, and, in general, to protect investors and the public interest. The Commission believes that the amendments should improve NASD's ability to ensure that its membership is not likely to engage in conduct that may be harmful to public investors.

The Commission believes that NASD's proposed changes to Rule 1017 are proper. First, the adoption of a defined quantitative measure of the amount of assets transferred that will require an application for approval should provide a greater degree of clarity to NASD members such that they may more readily anticipate when it will be necessary to file an application. The Commission also notes that the changes to Rule 1017 should result in its application to a broader range of transactions, in that applications for approval will now be required for any form of asset transfer, and not only acquisitions, and will be required except where both parties are members of the NYSE. This should enhance the NASD's ability to ensure that such transactions do not result in a member or its owners insulating itself or themselves from the responsibility to pay existing or potential customer claims.

The Commission believes that NASD's codification of a rebuttable presumption to deny an application for membership or continued membership where the applicant's history reflects any of the negative events specified in Rule 1014(a)(3)(A) and (C) through (E) is also proper. The Commission notes that this presumption should provide additional guidance to applicants as to how such events will be assessed in considering an applicant's ability to comply with NASD's membership standards. Moreover, the change should serve to provide notice to potential applicants of the consequences of misconduct, and thereby discourage it. The Commission also notes that the presumption may be overcome if the applicant can demonstrate that it is otherwise capable of meeting NASD's membership standards. The Commission believes that, because NASD is a member organization charged with the protection of investors and the public interest, it is fair to require applicants to show why membership should be granted, notwithstanding any prior history of misconduct.

As a further measure to encourage compliance with arbitration or other awards, and to deny entry to those who disregard them, NASD has proposed to amend Rule 1014(a)(3) to add pending arbitrations or civil actions to the list of factors considered in deciding whether to grant membership or continued membership. Further, NASD would add the existence of unpaid arbitration awards or settlements, or other adjudicated customer awards, to the factors listed in Rule 1014(a)(3) that would trigger the presumption against granting approval of membership or continued membership. NASD would consider this factor not only in reviewing the member's application, but also in reviewing its control persons and other persons who, by virtue of other arrangements or capital structure, exercise control over the applicant. The Commission believes that these changes are appropriate because such matters may demonstrate an applicant's ability or willingness to comply with the Act, the regulations of the Commission and the rules of NASD. Moreover, the new provisions should provide incentive to NASD members, potential NASD members, and persons that control NASD members to comply with arbitration or other awards.

Finally, the Commission believes that NASD's expansion of the definition of ''Associated Person,'' for purposes of its membership rules, to include non-natural persons is proper. The Commission believes the inclusion of such persons should permit NASD to examine a broader range of entities that potentially control an applicant, and thereby ensure that its ability to assess the applicant and the applicant's business history are not unnecessarily restricted.

It is therefore ordered, pursuant to section 19(b)(2) of the Act,[9] that the proposed rule change (File No. SR–NASD–2003–07) be, and it hereby is, approved.

For the Commission, by the Division of Market Regulation, pursuant to delegated authority.[10]

Jill M. Peterson,

Assistant Secretary.

[FR Doc. 03–32179 Filed 12–30–03; 8:45 am]

BILLING CODE 8010–01–P

[7] In approving this proposal, the Commission has considered the proposed rule's impact on efficiency, competition, and capital formation. 15 U.S.C. 78c(f).

[8] 15 U.S.C. 78*o*-3(b)(6).

[9] 15 U.S.C. 78s(b)(2).

[10] 17 CFR 200.30–3(a)(12).

SECURITIES AND EXCHANGE COMMISSION

[Release No. 34–48986; File No. SR–NASD–2003–183]

Self-Regulatory Organizations; Notice of Filing of Proposed Rule Change by the National Association of Securities Dealers, Inc. Relating to Proposed Amendments to Rule 1120 Regarding Regulatory Element Contact Person

December 23, 2003.

Pursuant to section 19(b)(1) of the Securities Exchange Act of 1934 (''Act'')[1] and Rule 19b–4 thereunder,[2] notice is hereby given that on December 9, 2003, the National Association of Securities Dealers, Inc. (''NASD''), filed with the Securities and Exchange Commission (''Commission'') the proposed rule change as described in Items I, II, and III below, which Items have been prepared by the NASD. The Commission is publishing this notice to solicit comments on the proposed rule change from interested persons.

I. Self-Regulatory Organization's Statement of the Terms of Substance of the Proposed Rule Change

The NASD is proposing to amend Rule 1120 to require that each member designate and identify to NASD the individual(s) who will receive Web Central Registration Depository (''CRD'') continuing education (''CE'') Regulatory Element e-mails. The proposed rule change further would require that each member quarterly review and update the CE contact person(s) information. Below is the text of the proposed rule change. Proposed new language is in *italics*; proposed deletions are in [brackets].

* * * * *

1120. Continuing Education Requirements

This Rule prescribes requirements regarding the continuing education of certain registered persons subsequent to their initial qualification and registration with *NASD* [the Association]. The requirements shall

[1] 15 U.S.C. 78s(b)(1).

[2] 17 CFR 240.19b–4.

consist of a Regulatory Element and a Firm Element as set forth below.

(a) Regulatory Element

(1) through (6) No change.

(7) Regulatory Element Contact Person

Each member shall designate and identify to NASD (by name and e-mail address) an individual or individuals responsible for receiving e-mail notifications provided via the Central Registration Depository regarding when a registered person is approaching the end of his or her Regulatory Element time frame and when a registered person is deemed inactive due to failure to complete the requirements of the Regulatory Element program, and provide prompt notification to NASD regarding any change in such designation(s). Each member must review and, if necessary, update the information regarding its Regulatory Element contact person(s) within 17 business days after the end of each calendar quarter to ensure the information's accuracy.

(b) No change.[3]

* * * * *

II. Self-Regulatory Organization's Statement of the Purpose of, and Statutory Basis for, the Proposed Rule Change

In its filing with the Commission, the NASD included statements concerning the purpose of and basis for the proposed rule change and discussed any comments it received on the proposed rule change. The text of these statements may be examined at the places specified in Item IV below. The NASD has prepared summaries, set forth in Sections A, B, and C below, of the most significant aspects of such statements.

A. Self-Regulatory Organization's Statement of the Purpose of, and Statutory Basis for, the Proposed Rule Change

1. Purpose

NASD Rule 1120 sets forth the CE requirements for registered persons. One of the two CE components is the Regulatory Element, a computer-based education program administered by the NASD to help ensure that registered persons are kept up-to-date on regulatory, compliance, and sales practice matters in the industry. Each registered person is required to complete the Regulatory Element initially within 120 days after the person's second registration anniversary date and, thereafter, within 120 days after every third registration anniversary date. A registered person who becomes inactive for failing to complete the required Regulatory Element program (''CE inactive'') is prohibited from performing, or being compensated for, any activities requiring registration, including supervision. Members are required under NASD Rule 1120 to restrict CE inactive persons from performing the prohibited activities.

To help firms keep track of their registered persons' Regulatory Element status, NASD provides members with e-mail notifications through Web CRD when a person is both 90 days and 30 days away from the end of his or her period to complete the Regulatory Element program before going inactive. CRD also notifies members when a registered person at the firm becomes CE inactive. Currently, receipt of the e-mail notifications is optional, and some firms have elected not to receive the notifications. The proposed rule change would require each member to designate a contact person or persons to receive such CRD Regulatory Element e-mail notifications. The member would be required to provide to the NASD the name and e-mail address of the designated contact person(s) and to promptly notify the NASD of any changes to the information. The NASD intends to collect the contact information through the NASD Contact System[4] on the NASD Web site.

To ensure the accuracy of the CE contact information, the proposed rule change also would require that each member review and, if necessary, update its CE contact person information within 17 business days after the end of each calendar quarter.[5] The NASD is examining different methods of reminding members of the obligation to quarterly review and update contact person information, including the possibility of a Web page linked to the act of filing the FOCUS report that would prompt members to update such contact person and/or through e-mail reminders to the designated CE contact person.[6]

The NASD believes that the proposed rule change will help firms avoid an NASD Rule 1120(a) violation that would occur if an inactive person were permitted to perform, or receive compensation for, activities that required registration during the period of inactive status. Specifically, the notifications will ensure that firms are positioned to prevent any registered persons from becoming inactive, thus enabling firms and individuals to avoid violations that occur when persons prohibited from doing business due to a CE inactive status nonetheless conduct business or improperly receive compensation.

The NASD also believes the proposed rule change is designed to assist the NASD with its efforts to further automate various aspects of its examination program with a goal of removing a substantial portion of CE compliance inspections from on-site firm examinations. The NASD believes that a more automated approach will result in a more efficient use of the NASD Department of Member Regulation resources and lead to a less intrusive regulatory approach for firms.

2. Statutory Basis

The NASD believes that the proposed rule change is consistent with the provisions of section 15A(b)(6) of the Act,[7] which requires, among other things, that NASD's rules must be designed to prevent fraudulent and manipulative acts and practices, to promote just and equitable principles of trade, and, in general, to protect investors and the public interest. The NASD believes that the proposed rule change is designed to accomplish these ends by helping firms ensure that their registered persons complete the required Regulatory Element training and are prevented from conducting business if they become CE inactive.

[3] Subparagrah (c) was renumbered to subparagraph (b) to accurately reflect the current text of NASD Rule 1120. Pursuant to a telephone conversation between Grace Yeh, Counsel, NASD, and A. Michael Pierson, Law Clerk, Division of Market Regulation (''Division''), Commission, dated, December 22, 2003.

[4] Effective as of December 8, 2003, the NASD Contact System replaced the Member Firm Contact Questionnaire, the previous system used for members to update and maintain certain required contact information.

[5] This proposed schedule is consistent with a member's quarterly FOCUS reporting schedule, as well as with the proposed rule change regarding members' business continuity plans. *See* Securities Exchange Act Release No. 46444 (August 30, 2002), 67 FR 57257 (September 9, 2002) (File No. SR–NASD–2002–108); Securities Exchange Act Release No. 47441 (March 4, 2003), 68 FR 11432 (March 10, 2003) (Notice of Filing of Amendment Nos. 1, 2, and 3 of File No. SR–NASD–2002–108); Securities Exchange Act Release No. 48503 (September 17, 2003), 68 FR 55686 (September 26, 2003) (Notice of Filing of Amendment Nos. 4 and 5 of File No. SR–NASD–2002–108). The Commission notes that these filings are pending at the Commission, and would require members to review and update emergency contact information within 17 business days after the end of each calendar quarter. Similarly, the proposed schedule is consistent with a proposed rule change filed with the Commission regarding the review and update of a member's Executive Representative designation and contact information. *See* SR–NASD–2003–184.

[6] Similarly, NASD would prompt members to review and update, where necessary, their emergency contact and Executive Representative information. *See supra* note 4.

[7] 15 U.S.C. 78*o*–3(b)(6).

B. Self-Regulatory Organization's Statement on Burden on Competition

The NASD does not believe that the proposed rule change will result in any burden on competition that is not necessary or appropriate in furtherance of the purposes of the Act.

C. Self-Regulatory Organization's Statement on Comments on the Proposed Rule Change Received From Members, Participants, or Others

Written comments were neither solicited nor received.

III. Date of Effectiveness of the Proposed Rule Change and Timing for Commission Action

Within 35 days of the date of publication of this notice in the **Federal Register** or within such longer period (i) As the Commission may designate up to 90 days of such date if it finds such longer period to be appropriate and publishes its reasons for so finding or (ii) as to which the NASD consents, the Commission will:

A. By order approve such proposed rule change, or

B. institute proceedings to determine whether the proposed rule change should be disapproved.

IV. Solicitation of Comments

Interested persons are invited to submit written data, views, and arguments concerning the foregoing, including whether the proposed rule change is consistent with the Act. Persons making written submissions should file six copies thereof with the Secretary, Securities and Exchange Commission, 450 Fifth Street, NW., Washington, DC 20549–0609. Comments may also be submitted electronically at the following e-mail address: *rule-comments@sec.gov*. All comment letters should refer to File No. SR–NASD–2003–183. This file number should be included on the subject line if e-mail is used. To help the Commission process and review your comments more efficiently, comments should be sent in hardcopy or by e-mail but not by both methods. Copies of the submission, all subsequent amendments, all written statements with respect to the proposed rule change that are filed with the Commission, and all written communications relating to the proposed rule change between the Commission and any person, other than those that may be withheld from the public in accordance with the provisions of 5 U.S.C. 552, will be available for inspection and copying in the Commission's Public Reference Room. Copies of such filing will also be available for inspection and copying at the principal office of the NASD. All submissions should refer to File No. SR–NASD–2003–183 and should be submitted by January 21, 2004.

For the Commission, by the Division of Market Regulation, pursuant to delegated authority.[8]

Jill M. Peterson,

Assistant Secretary.

[FR Doc. 03–32180 Filed 12–30–03; 8:45 am]

BILLING CODE 8010–01–P

SECURITIES AND EXCHANGE COMMISSION

[Release No. 34–48989; File No. SR–NASD–00–04]

Self-Regulatory Organizations; Order Approving Proposed Rule Change and Notice of Filing and Order Granting Accelerated Approval to Amendments Nos. 6, 7, 8, 9, and 10 by the National Association of Securities Dealers, Inc. Relating to Its Corporate Financing Rule

December 23, 2003.

I. Introduction

On January 21, 2000, the National Association of Securities Dealers, Inc. (''NASD'') filed with the Securities and Exchange Commission (''Commission'' or ''SEC''), pursuant to Section 19(b)(1) of the Securities Exchange Act of 1934 (''Act''),[1] and Rule 19b–4 thereunder,[2] a proposed rule change amending NASD Conduct Rule 2710. NASD filed Amendments Nos. 1,[3] 2,[4] and 3[5] to the proposed rule change on March 6, 2000, March 21, 2000, and March 30, 2000, respectively. The proposed rule change was published for comment in the **Federal Register** on April 11, 2000.[6] The Commission received 14 comments.[7] NASD filed Amendment No. 4 on December 11, 2000.[8] NASD filed Amendment No. 5 on February 4, 2001,[9] which was published for comment in the **Federal Register** on March 14, 2001.[10] The Commission received eight comments.[11] NASD filed Amendment Nos. 6,[12] 7,[13] 8,[14] 9,[15] and 10[16] on November 19, 2001, and April

---

[8] 17 CFR 200.30–3(a)(12).

[1] 15 U.S.C. 78s(b)(1).

[2] 17 CFR 240.19b–4.

[3] Letter from Suzanne E. Rothwell, Chief Counsel, Corporate Financing, NASD Regulation, Inc. (''NASD Regulation''), to Katherine A. England, Assistant Director, Division of Market Regulation (''Division''), Commission, dated March 3, 2000 (''Amendment No. 1'').

[4] Letter from Suzanne E. Rothwell, Chief Counsel, Corporate Financing, NASD Regulation, to Katherine A. England, Assistant Director, Division, Commission, dated March 20, 2000 (''Amendment No. 2'').

[5] Letter from Suzanne E. Rothwell, Chief Counsel, Corporate Financing, NASD Regulation, to Katherine A. England, Assistant Director, Division, Commission, dated March 29, 2000 (''Amendment No. 3'').

[6] *See* Securities Exchange Act Release No. 42619 (April 4, 2000), 65 FR 19409 (''initial notice'').

[7] These comments, and NASD Regulation's response, are discussed in the release cited in footnote 9.

[8] Amendment No. 4, filed December 11, 2000, amends the original filing as modified by Amendment Nos. 1, 2, and 3 in response to comments.

[9] NASD submitted a new Form 19b–4, which replaced and superseded all previous versions of the proposed rule change in their entirety.

[10] *See* Securities Exchange Act Release No. 44044 (March 6, 2001), 66 FR 14949.

[11] These comments, and the amendments proposed by NASD Regulation in response, are summarized in Section III. of this order.

[12] NASD submitted a new Form 19b–4, which replaced and superseded all previous versions of the proposed rule change in their entirety.

[13] Letter from Gary L. Goldsholle, Associate General Counsel, NASD Regulation, to Katherine A. England, Assistant Director, Division, Commission, dated April 3, 2002 (''Amendment No. 7''). Amendment No. 7 makes certain technical corrections to the rule text as it appears in Amendment No. 6, such as correcting the numbering of certain paragraphs in the rule text. As such, it is not subject to notice and comment.

[14] Letter from Gary L. Goldsholle, Associate General Counsel, NASD, to Katherine A. England, Assistant Director, Division, Commission, dated April 11, 2003 (''Amendment No. 8''). Among other things, Amendment No. 8: (i) Amends the definition of ''item of value'' in proposed Rule 2710(c)(3)(B) to exclude derivative instruments and certain other transactions; (ii) amends proposed NASD Rule 2710(a) to define ''fair price;'' (iii) modifies the requirement in proposed NASD Rule 2710(b)(6)(A)(iv) such that information initially filed in connection with debt securities and derivative instruments acquired or entered into for a ''fair price'' may be limited to a brief description of the transaction and a representation that the transaction was, or, if the pricing terms have not been set will, be entered into for a ''fair price;'' (iv) amends the lock-up requirements in proposed Rule 2710(g)(2) to exempt certain debt securities and derivative instruments; and (v) changes references in the rules from ''the Association'' to ''NASD.''

[15] Letter from Therese Woods, Deputy Director, Corporate Financing, NASD, to Katherine A. England, Assistant Director, Division, Commission, dated April 25, 2003 (''Amendment No. 9''). Amendment No. 9 makes technical corrections to the proposed rule text and amends proposed Rule 2710(b)(6)(A)(iv)(b) to state: ''information initially filed in connection with debt securities and derivative instruments acquired or entered into for ''fair price'' as defined in subsection (a)(9), but not excluded from items of value under subsection (c)(3)(B)(vi) or (vii), may be limited to a brief description of the transaction (additional information may be required in the review process) and a representation by the member that a registered principal or senior manager on behalf of the member has determined that the transaction was (or if the pricing terms have not been set) will be entered into at a fair price as defined in subsection (a)(9);''.

[16] Letter from Therese Woods, Deputy Director, Corporate Financing, NASD, to Katherine A. England, Assistant Director, Division, Commission, dated May 28, 2003 (''Amendment No. 10''). First, Amendment No. 10 makes technical corrections to the proposed rule text and revises the definition of ''fair price'' in proposed Rule 2710(a)(9) to include a cross reference to subsection (e)(5) and to clarify

3, 2002, April 14, 2003, April 29, 2003, and June 2, 2003, respectively. This order issues notice of, and grants accelerated approval to, the filing as modified by Amendment Nos. 6, 7, 8, 9, and 10.

II. Self-Regulatory Organization's Statement of the Terms of Substance of the Proposed Rule Change

In response to comments to Amendment No. 5, NASD is proposing additional amendments to Rules 2710 and 2720 of the NASD's Conduct Rules. Below is the text of the proposed rule change. Proposed new language is in italics; proposed deletions are in brackets. The text of the proposed rule change is marked to show additions and deletions from the NASD Corporate Financing Rule as it currently exists. The discussion section of this notice, however, focuses on the changes made in Amendment Nos. 6 through 10. For an explanation of the original filing, see the initial notice cited in footnote 6.

* * * * *

2710. Corporate Financing Rule—Underwriting Terms and Arrangements

(a) Definitions

For purposes of this Rule, the following terms shall have the meanings stated below. The definitions in Rule 2720 are incorporated herein by reference.

(1) Issuer

The issuer of the securities offered to the public, any selling security holders offering securities to the public, any affiliate of the issuer or selling security holder, and the officers or general partners, directors, employees and security holders thereof[;].

(2) Net Offering Proceeds

Offering proceeds less all expenses of issuance and distribution[;].

(3) Offering Proceeds

Public offering price of all securities offered to the public, not including securities subject to any overallotment option, securities to be received by the underwriter and related persons, or securities underlying other securities[;].

(4) *Participating Member(s)*

Any NASD member that is participating in a public offering, any associated person of the member, any members of their immediate family, and any affiliate of the member.

[(4)]*(5)* Participation or Participating in a Public Offering

Participation in the preparation of the offering or other documents, participation in the distribution of the offering on an underwritten, non-underwritten, or any other basis, furnishing of customer and/or broker lists for solicitation, or participation in any advisory or consulting capacity to the issuer related to the offering, but not the preparation of an appraisal in a savings and loan conversion or a bank offering or the preparation of a fairness opinion pursuant to SEC Rule 13e-3[; and].

[(5)]*(6)* Underwriter and Related Persons

[Includes underwriters,] *Consists of* underwriter's counsel, financial consultants and advisors, finders, [members of the selling or distribution group,] any *participating* member [participating in the public offering], and any [and all] other persons [associated with or] related to *any participating member* [and members of the immediate family of any of the aforementioned persons].

(7) Listed Securities

Securities meeting the listing standards to trade on the national securities exchanges identified in SEC Rule 146, markets registered with the SEC under Section 6 of the Exchange Act, and any offshore market that is a ''designated offshore securities market'' under Rule 902(b) of SEC Regulation S.

(8) Derivative Instruments

A derivative instrument is any ''eligible OTC derivative instrument'' as defined in SEC Rule 3b–13(a)(1), (2) and (3).

(9) Fair Price

A derivative instrument or non-convertible or non-exchangeable debt security has been acquired or entered into at a fair price for purposes of subparagraphs (b)(6)(A)(iv), (c)(3)(B)(vi) and (vii), and (e)(5) if the underwriters and related persons have priced the debt security or derivative instrument in good faith; on an arm's length, commercially reasonable basis; and in accordance with pricing methods and models and procedures used in the ordinary course of their business for pricing similar transactions. A derivative instrument or other security received for acting as a private placement agent for the issuer, for providing or arranging a loan, credit facility, merger, acquisition or any other service, including underwriting services, is not included within this ''fair price'' definition.

(10) Required Filing Date

The required filing date shall be the dates provided in subparagraph (b)(4), and for a public offering exempt from filing under subparagraph (b)(7), the required filing date for purposes of subparagraph (d) and (g) shall be the date the public offering would have been required to be filed with the NASD but for the exemption.

(b) Filing Requirements

(1)–(3) No change.

(4) Requirement for Filing

(A) Unless filed by the issuer, the managing underwriter, or another member, a member that anticipates participating in a public offering of securities subject to this Rule shall file with [the Association] *NASD* the documents and information with respect to the offering specified in subparagraphs (5) and (6) below:

(i) no later than one business day after [the filing of] any such documents *are filed with or submitted to*:

[(i)]*a.* [with] the Commission; *or*

[(ii)]*b.* [with the] *any* state securities commission *or other regulatory authority; or*

[(iii) with any other regulatory authority; or]

[(iv)]*(ii)* if not filed with *or submitted to* any regulatory authority, at least fifteen [(15)] business days prior to the anticipated [offering] date *on which offers will commence.*

(B) No [offering] *sales* of securities subject to this Rule shall commence unless:

(i) the documents and information specified in subparagraphs (5) and (6) below have been filed with and reviewed by [the Association] *NASD*; and

(ii) No change.

(C) No change.

(5) No change.

(6) Information Required To Be Filed

(A) Any person filing documents *with the NASD* that are required to be filed

---

that a derivative instrument or other security received for acting as a private placement agent for the issuer for providing or arranging a loan, credit facility, merger, acquisition, or any other service, is not included within the definition of ''fair price.'' Second, Amendment No. 10 adds subsection (a)(10) to Rule 2710, regarding required filing dates. Third, Amendment No. 10 adds the following language to proposed Rule 2710(b)(6)(A)(iv)(b): ''provided, however, that information filed in connection with debt securities and derivative instruments acquired or entered into for a ''fair price'' as defined in subsection (a)(9) may be limited as described in subsection (b)(6)(A)(iv)b.'' Fourth, Amendment No. 10 adds the following language to the beginning of the first sentence of proposed Rule 2710(g): ''In any public equity offering, other than a public equity offering by an issuer that can meet the requirements in subparagraphs (b)(7)(C)(i) or (ii), any * * *.'' Fifth, Amendment No. 10 adds new subparagraph (e)(5) to Rule 2710, regarding valuation of items of value acquired in connection with a fair price derivative or debt transaction.

under paragraph (b)(4) above shall provide the following information with respect to the offering through [the Association's] NASD's electronic filing system:

(i)–(ii) No change.

(iii) a statement of the association or affiliation with any member of any officer[,] *or* director *of the issuer, of any* [or security holder] *beneficial owner* of [the issuer in an initial public offering of equity securities, and with respect to any other offering provide such information with respect to any officer, director or security holder of five percent] *5%* or more of any class of the issuer's securities, *and of any beneficial owner of the issuer's unregistered equity securities that were acquired during the 180-day period immediately preceding the required filing date of the public offering, except for purchases described in subparagraph (c)(3)(B)(iv) below. This statement must identify* [to include]:

a. [the identity of] the person;

b. [the identity of] the member and whether such member is participating in any capacity in the public offering; and

c. the number of equity securities or the face value of debt securities owned by such person, the date such securities were acquired, and the price paid for such securities.

(iv) [a statement addressing the factors in subparagraphs (c)(4)(C) and (D), where applicable;]

[(v)] a detailed explanation of any other arrangement entered into during the [12-month] *180-day* period immediately preceding the *required* filing *date* of the *public* offering, which arrangement provides for the receipt of any item of value [and/]or the transfer of any warrants, options, or other securities from the issuer to the underwriter and related persons, *provided however:* [; and]

a. information regarding debt securities and derivative instruments not considered an item of value under subsection (c)(3)(B)(vi) and (vii) is not required to be filed; and

b. information initially filed in connection with debt securities and derivative instruments acquired or entered into for a ''fair price'' as defined in subsection (a)(9), but not excluded from items of value under subsection (c)(3)(B)(vi) or (vii), may be limited to a brief description of the transaction (additional information may be required in the review process) and a representation by the member that a registered principal or senior manager on behalf of the member has determined that the transaction was or (if the pricing terms have not been set) will be entered into at a fair price as defined in subsection (a)(9).

(v) a statement demonstrating compliance with all of the criteria of an exception from underwriting compensation in subparagraph (d)(5) below, when applicable; and

(vi) a detailed explanation and any documents related to:

a. the modification of any *information or representation previously provided to the NASD or of any* item of underwriting compensation, *including the information required in subparagraph (b)(6)(A)(iii) above with respect to any securities of the issuer acquired subsequent to the required filing date and prior to the effectiveness or commencement of the offering[,] ; or*

b. any new arrangement that provides for the receipt of any additional item of value by any participating member subsequent to the [review and approval of such compensation] *issuance of an opinion of no objections to the underwriting terms and arrangements* by [the Association] *NASD and within 90 days immediately following the date of effectiveness or commencement of sales of the public offering, provided, however, that information filed in connection with debt securities and derivative instruments acquired or entered into for a ''fair price'' as defined in subsection (a)(9) may be limited as described in subsection (b)(6)(A)(iv)b.*

(vii) any other information required to be filed under this Rule.

(B) No change.

(7)–(11) No change.

(c) Underwriting Compensation and Arrangements

(1) General

No member or person associated with a member shall participate in any manner in any public offering of securities in which the underwriting or other terms or arrangements in connection with or relating to the distribution of the securities, or the terms and conditions related thereto, are unfair or unreasonable.

(2) Amount of Underwriting Compensation

(A) No member or person associated with a member shall receive an amount of underwriting compensation in connection with a public offering [which] *that* is unfair or unreasonable and no member or person associated with a member shall underwrite or participate in a public offering of securities if the underwriting compensation in connection with the public offering is unfair or unreasonable.

(B)–(D) No change.

(E) The maximum amount of compensation (stated as a percentage of the dollar amount of the offering proceeds) [which] *that* is considered fair and reasonable generally will vary directly with the amount of risk to be assumed by [the underwriter and related persons] *participating members* and inversely with the dollar amount of the offering proceeds.

(3) Items of [Compensation] *Value*

(A) For purposes of determining the amount of underwriting compensation received or to be received by the underwriter and related persons pursuant to subparagraph *(c)*(2) above, the following items and all other items of value received or to be received by the underwriter and related persons in connection with or related to the distribution of the *public* offering, as determined pursuant to [sub]paragraph [(4)] *(d)* below shall be included:

(i)–(iii) No change.

(iv) finder's fees, *whether in the form of cash, securities or any other item of value;*

(v) wholesaler's fees;

(vi) financial consulting and advisory fees, whether in the form of cash, securities, or any other item of value;

(vii) *common or preferred* stock, options, warrants, and other *equity* securities, *including debt securities convertible to or exchangeable for equity securities,* [including securities] received [as underwriting compensation, for example]:

a. [in connection with a] *for acting as* private placement *agent* [of securities] for the issuer;

b. for providing or arranging *a loan, credit facility,* [bridge financing] *merger or acquisition services, or any other service* for the issuer;

[c. as a finder's fee;]

[d. for consulting services to the issuer; and]

[e.]*c.* [securities purchased] *as an investment* in a private placement made by the issuer; *or*

d. at the time of the public offering.

(viii) special sales incentive items [in compliance with subparagraph (6)(B)(xi)];

(ix) any right of first refusal provided to [the underwriter and related persons] *any participating member* to underwrite or participate in future public offerings, private placements or other financings, which will have a compensation value of 1% of the offering proceeds or that dollar amount contractually agreed to by the issuer and underwriter to waive or terminate the right of first refusal;

(x) No change.

(xi) commissions, expense reimbursements, or other compensation to be received by the underwriter and related persons as a result of the

exercise or conversion, within twelve [(12)] months following the effective date of the offering, of warrants, options, convertible securities, or similar securities distributed as part of the *public* offering;

(xii) fees of a qualified independent underwriter; and

(xiii) compensation, including expense reimbursements, *previously* paid [in the six (6) months prior to the initial or amended filing of the prospectus or similar documents] to any member *in connection with a* [or person associated with a member for a] proposed public offering that was not completed[.]*, unless the member does not participate in the revised public offering.*

(B) *Notwithstanding subparagraph (c)(3)(A) above, the following shall not be considered an item of value:*

(i) [E] *e*xpenses customarily borne by an issuer, such as printing costs; SEC, ''blue sky'' and other registration fees; [the Association] *NASD* filing fees; and accountant's fees, [shall be excluded from underwriter's compensation] whether or not paid through [an underwriter] a *participating member;*

(ii) cash compensation for acting as placement agent for a private placement or for providing a loan, credit facility, or for services in connection with a merger/acquisition;

(iii) listed securities purchased in public market transactions;

(iv) securities acquired through any stock bonus, pension, or profit-sharing plan that qualifies under Section 401 of the Internal Revenue Code;

(v) securities acquired by an investment company registered under the Investment Company Act of 1940;

(vi) non-convertible or non-exchangeable debt securities acquired for a fair price in the ordinary course of business in transactions unrelated to the public offering; and

(vii) derivative instruments entered into for a fair price in the ordinary course of business in a transaction unrelated to the public offering.

[(4)]*(d)* Determination of Whether [Compensation Is Received in Connection with the Offering] *Items of Value Are Included in Underwriting Compensation*

[(A)]*(1) Pre-Offering Compensation*

All items of value received [or to be received] *and all arrangements entered into for the future receipt of an item of value* by the underwriter and related persons during the [twelve (12) month] period *commencing 180 days* immediately preceding the *required* filing *date* of the registration statement or similar document *pursuant to subparagraph (b)(4) above[*, and at the time of and subsequent to] *until the date of effectiveness or commencement of sales of* the public offering[,] will be [examined to determine whether such items of value are] *considered to be* underwriting compensation in connection with the *public* offering [and, if received during the six (6) month period immediately preceding the filing of the registration statement or similar document, will be presumed to be underwriting compensation received in connection with the offering, provided, however, that such presumption may be rebutted on the basis of information satisfactory to the Association to support a finding that the receipt of an item is not in connection with the offering and shall not include cash discounts or commissions received in connection with a prior distribution of the issuer's securities].

(2) Undisclosed and Post-Offering Compensation

All items of value received and all arrangements entered into for the future receipt of an item of value by any participating member that are not disclosed to the NASD prior to the date of effectiveness or commencement of sales of a public offering, including items of value received subsequent to the public offering, are subject to post-offering review to determine whether such items of value are, in fact, underwriting compensation for the public offering.

[(B) Items of value received by an underwriter and related person more than twelve (12) months immediately preceding the date of filing of the registration statement or similar document will be presumed not to be underwriting compensation. However, items received prior to such twelve (12) month period may be included as underwriting compensation on the basis of information to support a finding that receipt of the item is in connection with the offering.]

[(C) For purposes of determining whether any item of value received or to be received by the underwriter and related persons is in connection with or related to the distribution of the public offering, the following factors, as well as any other relevant factors and circumstances, shall be considered:]

[(i) the length of time between the date of filing of the registration statement or similar document and:]

[a. the date of the receipt of the item of value;]

[b. the date of any contractual agreement for services for which the item of value was or is to be received; and]

[c. the date the performance of the service commenced, with a shorter period of time tending to indicate that the item is received in connection with the offering;]

[(ii) the details of the services provided or to be provided for which the item of value was or is to be received;]

[(iii) the relationship between the services provided or to be provided for which the item of value was or is to be received and:]

[a. the nature of the item of value;]

[b. the compensation value of the item; and]

[c. the proposed public offering;]

[(iv) the presence or absence of arm's length bargaining or the existence of any affiliate relationship between the issuer and the recipient of the item of value, with the absence of arm's length bargaining or the presence of any affiliation tending to indicate that the item of value is received in connection with the offering.]

[(D) For purposes of determining whether securities received or to be received by the underwriter and related persons are in connection with or related to the distribution of the public offering, the factors in subparagraph (C) above and the following factors shall be considered:]

[(i) any disparity between the price paid and the offering price or the market price, if a bona fide independent market exists at the time of acquisition, with a greater disparity tending to indicate that the securities constitute compensation;]

[(ii) the amount of risk assumed by the recipient of the securities, as determined by:]

[a. the restrictions on exercise and resale;]

[b. the nature of the securities (*e.g.*, warrant, stock, or debt); and]

[c. the amount of securities, with a larger amount of readily marketable securities without restrictions on resale or a warrant for securities tending to indicate that the securities constitute compensation; and]

[(iii) the relationship of the receipt of the securities to purchases by unrelated purchasers on similar terms at approximately the same time, with an absence of similar purchases tending to indicate that the securities constitute compensation.]

[(E) Notwithstanding the provisions of subparagraph (3)(A)(vi) above, financial consulting and advisory fees may be excluded from underwriting compensation upon a finding by the Association, on the basis of information satisfactory to it, that an ongoing

relationship between the issuer and the underwriter and related person has been established at least twelve (12) months prior to the filing of the registration statement or similar document or that the relationship, if established subsequent to that time, was not entered into in connection with the offering, and that actual services have been or will be rendered which were not or will not be in connection with or related to the offering.]

(3) Date of Receipt of Securities

Securities of the issuer acquired by the underwriter and related persons will be considered to be received for purposes of subparagraphs (d)(1) and (d)(5) as of the date of the:

(A) closing of a private placement, if the securities were purchased in or received for arranging a private placement; or

(B) execution of a written contract with detailed provisions for the receipt of securities as compensation for a loan, credit facility, or put option; or

(C) transfer of beneficial ownership of the securities, if the securities were received as compensation for consulting or advisory services, merger or acquisition services, acting as a finder, or for any other service.

(4) Definitions

For purposes of subparagraph (d)(5) below, the following terms will have the meanings stated below.

(A) An entity:

(i) includes a group of legal persons that either:

a. are contractually obligated to make co-investments and have previously made at least one such investment; or

b. have filed a Schedule 13D or 13G with the SEC that identifies the legal persons as members of a group that have agreed to act together for the purpose of acquiring, holding, voting or disposing of equity securities of an issuer in connection with a previous investment; and

(ii) may make its investment or loan through a wholly owned subsidiary (except when the entity is a group of legal persons).

(B) An institutional investor is any individual or legal person that has at least $50 million invested in securities in the aggregate in its portfolio or under management, including investments held by its wholly owned subsidiaries; provided that no participating members direct or otherwise manage the institutional investor's investments or have an equity interest in the institutional investor, either individually or in the aggregate, that exceeds 5% for a publicly owned entity or 1% for a nonpublic entity.

(C) A bank or insurance company is only the regulated entity, not its subsidiaries or other affiliates.

(D) A right of preemption means the right of a shareholder to acquire additional securities in the same company in order to avoid dilution when additional securities are issued, pursuant to:

(i) any option, shareholder agreement, or other contractual right entered into at the time of a purchase of securities;

(ii) the terms of the security purchased;

(iii) the issuer's charter or by-laws; or

(iv) the domestic law of a foreign jurisdiction that regulates the issuance of the securities.

(E) ''Total equity securities'' means the aggregate of the total shares of:

(i) common stock outstanding of the issuer; and

(ii) common stock of the issuer underlying all convertible securities outstanding that convert without the payment of any additional consideration.

(5) Exceptions From Underwriting Compensation

Notwithstanding subparagraph (d)(1) above, the following items of value are excluded from underwriting compensation (but are subject to the lock-up restriction in subparagraph (g)(1) below), provided that the member does not condition its participation in the public offering on an acquisition of securities under an exception and any securities purchased are purchased at the same price and with the same terms as the securities purchased by all other investors.

(A) Purchases and Loans by Certain Entities—Securities of the issuer purchased in a private placement or received as compensation for a loan or credit facility before the required filing date of the public offering pursuant to subparagraph (b)(4) above by certain entities if:

(i) each entity:

a. either:

1. manages capital contributions or commitments of $100 million or more, at least $75 million of which has been contributed or committed by persons that are not participating members;

2. manages capital contributions or commitments of $25 million or more, at least 75% of which has been contributed or committed by persons that are not participating members;

3. is an insurance company as defined in Section 2(a)(13) of the Securities Act or is a foreign insurance company that has been granted an exemption under this Rule; or

4. is a bank as defined in Section 3(a)(6) of the Act or is a foreign bank that has been granted an exemption under this Rule; and

b. is a separate and distinct legal person from any member and is not registered as a broker/dealer;

c. makes investments or loans subject to the evaluation of individuals who have a contractual or fiduciary duty to select investments and loans based on the risks and rewards to the entity and not based on opportunities for the member to earn investment banking revenues;

d. does not participate directly in investment banking fees received by any participating member for underwriting public offerings; and

e. has been primarily engaged in the business of making investments in or loans to other companies; and

(ii) all entities related to each member in acquisitions that qualify for this exception do not acquire more than 25% of the issuer's total equity securities during the review period in subparagraph (d)(1), calculated immediately following the transaction.

(B) Investments In and Loans to Certain Issuers—Securities of the issuer purchased in a private placement or received as compensation for a loan or credit facility before the required filing date of the public offering pursuant to subparagraph (b)(4) above by certain entities if:

(i) each entity:

a. manages capital contributions or commitments of at least $50 million;

b. is a separate and distinct legal person from any member and is not registered as a broker/dealer;

c. does not participate directly in investment banking fees received by the member for underwriting public offerings; and

d. has been primarily engaged in the business of making investments in or loans to other companies; and

(ii) institutional investors beneficially own at least 33% of the issuer's total equity securities, calculated immediately prior to the transaction;

(iii) the transaction was approved by a majority of the issuer's board of directors and a majority of any institutional investors, or the designees of institutional investors, that are board members; and

(iv) all entities related to each member in acquisitions that qualify for this exception do not acquire more than 25% of the issuer's total equity securities, calculated immediately following the transaction.

(C) Private Placements With Institutional Investors—Securities of the issuer purchased in, or received as

placement agent compensation for, a private placement before the required filing date of the public offering pursuant to subparagraph (b)(4) above if:

(i) institutional investors purchase at least 51% of the ''total offering'' (comprised of the total number of securities sold in the private placement and received or to be received as placement agent compensation by any member);

(ii) an institutional investor was the lead negotiator or, if the terms were not negotiated, was the lead investor with the issuer to establish or approve the terms of the private placement; and

(iii) underwriters and related persons did not, in the aggregate, purchase or receive as placement agent compensation more than 20% of the ''total offering'' (excluding purchases by any entity qualified under subparagraph (d)(5)(A) above).

(D) Acquisitions and Conversions to Prevent Dilution—Securities of the issuer if:

(i) the securities were acquired as the result of:

a. a right of preemption that was granted in connection with securities that were purchased either:

1. in a private placement and the securities are not deemed by the NASD to be underwriting compensation; or

2. from a public offering or the public market; or

b. a stock-split or a pro-rata rights or similar offering; or

c. the conversion of securities that have not been deemed by the NASD to be underwriting compensation; and

(ii) the only terms of the purchased securities that are different from the terms of securities purchased by other investors are pre-existing contractual rights that were granted in connection with a prior purchase;

(iii) the opportunity to purchase in a rights offering or pursuant to a right of preemption, or to receive additional securities as the result of a stock-split or conversion was provided to all similarly situated securityholders; and

(iv) the amount of securities purchased or received did not increase the recipient's percentage ownership of the same generic class of securities of the issuer or of the class of securities underlying a convertible security calculated immediately prior to the investment, except in the case of conversions and passive increases that result from another investor's failure to exercise its own rights.

(E) Purchases Based On a Prior Investment History—Purchases of securities of the issuer if:

(i) the amount of securities purchased did not increase the purchaser's percentage ownership of the same generic class of securities of the issuer or of the class of securities underlying a convertible security calculated immediately prior to the investment; and

(ii) an initial purchase of securities of the issuer was made at least two years and a second purchase was made more than 180 days before the required filing date of the public offering pursuant to subparagraph (b)(4) above.

[(5)](*e*) Valuation of Non-Cash Compensation

For purposes of determining the value to be assigned to securities received as underwriting compensation, the following criteria and procedures shall be applied[:].

[(A) No underwriter and related person may receive a security or a warrant for a security as compensation in connection with the distribution of a public offering that is different than the security to be offered to the public unless the security received as compensation has a bona fide independent market, provided, however, that: (i) in exceptional and unusual circumstances, upon good cause shown, such arrangement may be permitted by the Association; and (ii) in an offering of units, the underwriter and related persons may only receive a warrant for the unit offered to the public where the unit is the same as the public unit and the terms are no more favorable than the terms of the public unit.]

(1) Limitation on Securities Received Upon Exercise or Conversion of Another Security

An underwriter and related person may not receive a security (including securities in a unit), a warrant for a security, or a security convertible into another security as underwriting compensation in connection with a public offering unless:

(A) the security received or the security underlying the warrant or convertible security received is identical to the security offered to the public or to a security with a bona fide independent market; or

(B) the security can be accurately valued, as required by subparagraph (f)(2)(I) below.

[(B)]*(2) Valuation of Securities That Do Not Have an Exercise or Conversion Price*

[s] *S*ecurities that [are not options, warrants or convertible securities] *do not have an exercise or conversion price* shall *have a compensation value* [be valued on the basis of] *based on*:

[(i)] (*A*) the difference between [the per security cost and]*:*

(i) either the market price per security on the date of acquisition, [where a] *or, if no* bona fide independent market exists for the security, [or] the [proposed (and actual)] public offering price per security; *and*

(ii) the per security cost;

[(ii)] *(B)* multiplied by the number of securities received or to be received as underwriting compensation;

[(iii)] *(C)* divided by the offering proceeds; and

[(iv)] *(D)* multiplied by one hundred [(100)].

(3) Valuation of Securities That Have an Exercise or Conversion Price

[(C) o] *O*ptions, warrants or convertible securities *that have an exercise or conversion price* (''warrants'') shall [be valued on the basis of] *have a compensation value based on* the following formula:

[(i)] *(A)* the [proposed (and actual)] public offering price per security multiplied by .65 [(65%)];

[(ii)] *(B)* minus the [difference between] *resultant of* the exercise or conversion price per [security] *warrant* [and] *less* either*:*

(i) the market price per security on the date of acquisition, where a bona fide independent market exists for the security, or

(ii) the [proposed (and actual)] public offering price per security;

[(iii)] *(C)* divided by two [(2)];

[(iv)] *(D)* multiplied by the number of *securities underlying the* warrants[, options, and convertible securities received or to be received as underwriting compensation];

[(v)] *(E)* less the total price paid for the [securities] *warrants*;

[(vi)] *(F)* divided by the offering proceeds; and

[(vii)] *(G)* multiplied by one hundred [(100).]*;*

(H) provided, however, that, notwithstanding subparagraph (e)(4) below, such warrants shall have a compensation value of at least .2% of the offering proceeds for each amount of securities that is up to 1% of the securities being offered to the public (excluding securities subject to an overallotment option).

(4) Valuation Discount for Securities With a Longer Resale Restriction

[(D) a lower value equal to 80% and 60% of the calculated value shall be assigned if securities, and where relevant, underlying securities, are or will be restricted from sale, transfer, assignment or other disposition for a

period of one and two years, respectively, beyond the one-year period of restriction required by subparagraph (7)(A)(i) below.]

A lower value equal to 10% of the calculated value shall be deducted for each 180-day period that the securities or underlying securities are restricted from sale or other disposition beyond the 180-day period of the lock-up restriction required by subparagraph (g)(1) below. The transfers permitted during the lock-up restriction by subparagraphs (g)(2)(A)(iii)–(iv) are not available for such securities.

(5) Valuation of Items of Value Acquired in Connection with a Fair Price Derivative or Debt Transaction

Any debt or derivative transaction acquired or entered into at a ''fair price'' as defined in subsection (a)(9) and item of value received in or receivable in the settlement, exercise or other terms of such debt or derivative transaction shall not have a compensation value for purposes of determining underwriting compensation. If the actual price for the debt or derivative security is not a fair price, compensation will be calculated pursuant to this subsection (e) or based on the difference between the fair price and the actual price.

[(6)] *(f)* Unreasonable Terms and Arrangements

[(A)] *(1) General*

No member or person associated with a member shall participate in any manner in a public offering of securities after any arrangement proposed in connection with the public offering, or the terms and conditions relating thereto, has been determined to be unfair or unreasonable pursuant to this Rule or inconsistent with any By-Law or any Rule or regulation of [the Association] *NASD.*

[(B)] *(2) Prohibited Arrangements*

Without limiting the foregoing, the following terms and arrangements, when proposed in connection with [the distribution of] a public offering of securities, shall be unfair and unreasonable[:].

[(i)] *(A)* [a]*A*ny accountable expense allowance granted by an issuer to the underwriter and related persons [which] *that* includes payment for general overhead, salaries, supplies, or similar expenses of the underwriter incurred in the normal conduct of business[;].

[(ii)] *(B)* [a]*A*ny non-accountable expense allowance in excess of [three (3) percent;] *3% of offering proceeds.*

[(iii)] *(C)* [a]*A*ny payment of commissions or reimbursement of expenses directly or indirectly to the underwriter and related persons prior to commencement of the public sale of the securities being offered, except a reasonable advance against out-of-pocket accountable expenses actually anticipated to be incurred by the underwriter and related persons, which advance is reimbursed to the issuer to the extent not actually incurred[;].

[(iv)] *(D)* [t]*T*he payment of any compensation by an issuer to a member or person associated with a member in connection with an offering of securities [which] *that* is not completed according to the terms of agreement between the issuer and underwriter, except those negotiated and paid in connection with a transaction that occurs in lieu of the proposed offering as a result of the efforts of the underwriter and related persons and provided, however, that the reimbursement of out-of-pocket accountable expenses actually incurred by the member or person associated with a member shall not be presumed to be unfair or unreasonable under normal circumstances[;].

[(v)] *(E)* [a]*A*ny ''tail fee'' arrangement granted to the underwriter and related persons that has a duration of more than two [(2)] years from the date the member's services are terminated, in the event that the offering is not completed in accordance with the agreement between the issuer and the underwriter and the issuer subsequently consummates a similar transaction, except that a member may demonstrate on the basis of information satisfactory to [the Association] *NASD* that an arrangement of more than two [(2)] years is not unfair or unreasonable under the circumstances.

[(vi)] *(F)* [a]*A*ny right of first refusal provided to the underwriter or related persons to underwrite or participate in future public offerings, private placements or other financings [which] *that*:

[a.] *(i)* has a duration of more than three [(3)] years from the [effective] date *of effectiveness or commencement of sales* of the *public* offering; or

[b.] *(ii)* has more than one opportunity to waive or terminate the right of first refusal in consideration of any payment or fee[;].

[(vii)] *(G)* [a]*A*ny payment or fee to waive or terminate a right of first refusal regarding future public offerings, private placements or other financings provided to the underwriter and related persons [which] *that*:

[a.]*(i)* has a value in excess of the greater of [one percent (] 1% [)] of the offering proceeds in the public offering where the right of first refusal was granted (or an amount in excess of [one percent] *1%* if additional compensation is available under the compensation guideline of the original offering) or [five percent (] 5% [)] of the underwriting discount or commission paid in connection with the future financing (including any overallotment option that may be exercised), regardless of whether the payment or fee is negotiated at the time of or subsequent to the original public offering; or

[b.]*(ii)* is not paid in cash[;].

[(viii)]*(H) The terms or the exercise of the terms of an agreement for* the receipt by the underwriter and related persons of underwriting compensation consisting of any option, warrant or convertible security [which] *that*:

[a.]*(i)* is exercisable or convertible more than five [(5)] years from the effective date of the offering;

[b. is exerciseable or convertible at a price below either the public offering price of the underlying security or, if a bona fide independent market exists for the security or the underlying security, the market price at the time of receipt;]

[c.]*(ii)* is not in compliance with subparagraph [(5)(A)] *(e)(1)* above;

[d.]*(iii)* has more than one demand registration right at the issuer's expense;

[e.]*(iv)* has a demand registration right with a duration of more than five [(5)] years from the [effective] date *of effectiveness or the commencement of sales* of the *public* offering;

[f.]*(v)* has a piggyback registration right with a duration of more than seven [(7)] years from the [effective] date *of effectiveness or the commencement of sales* of the *public* offering;

[g.]*(vi)* has anti-dilution terms [designed to provide] *that allow* the underwriter and related persons [with disproportionate rights, privileges and economic benefits which are not provided to the purchasers of the securities offered to the public (or the public shareholders, if in compliance with subparagraph (5)(A) above)] *to receive more shares or to exercise at a lower price than originally agreed upon at the time of the public offering, when the public shareholders have not been proportionally affected by a stock split, stock dividend, or other similar event; or*

[h.]*(vii)* has anti-dilution terms [designed to provide for the receipt or accrual of] *that allow the underwriter and related persons to receive or accrue* cash dividends prior to the exercise or conversion of the security[; or].

[i. is convertible or exercisable or otherwise is on terms more favorable than the terms of the securities being offered to the public;]

[(ix)]*(I)* [t]*T*he receipt by the underwriter and related persons of any item of compensation for which a value

cannot be determined at the time of the offering[;].

[(x)]*(J)* [w]*W*hen proposed in connection with the distribution of a public offering of securities on a ''firm commitment'' basis, any over allotment option providing for the over allotment of more than [fifteen (15) percent] *15%* of the amount of securities being offered, computed excluding any securities offered pursuant to the over allotment option[;].

[(xi) stock numerical limitation. The receipt by the underwriter and related persons of securities which constitute underwriting compensation in an aggregate amount greater than ten (10) percent of the number or dollar amount of securities being offered to the public, which is calculated to exclude:]

[a. any securities deemed to constitute underwriting compensation;]

[b. any securities issued pursuant to an overallotment option;]

[c. in the case of a ''best efforts'' offering, any securities not actually sold; and]

[d. any securities underlying warrants, options, or convertible securities which are part of the proposed offering, except where acquired as part of a unit;]

[(xii)]*(K)* [t]*T*he receipt by a member or person associated with a member, pursuant to an agreement entered into at any time before or after the effective date of a public offering of warrants, options, convertible securities or units containing such securities, of any compensation or expense reimbursement in connection with the exercise or conversion of any such warrant, option, or convertible security in any of the following circumstances:

[a.]*(i)* the market price of the security into which the warrant, option, or convertible security is exercisable or convertible is lower than the exercise or conversion price;

[b.]*(ii)* the warrant, option, or convertible security is held in a discretionary account at the time of exercise or conversion, except where prior specific written approval for exercise or conversion is received from the customer;

[c.]*(iii)* the arrangements whereby compensation is to be paid are not disclosed:

[1.]*a.* in the prospectus or offering circular by which the warrants, options, or convertible securities are offered to the public, if such arrangements are contemplated or any agreement exists as to such arrangements at that time, and

[2.]*b.* in the prospectus or offering circular provided to security holders at the time of exercise or conversion; or

[d.]*(iv)* the exercise or conversion of the warrants, options or convertible securities is not solicited by the underwriter or related person, provided however, that any request for exercise or conversion will be presumed to be unsolicited unless the customer states in writing that the transaction was solicited and designates in writing the broker/dealer to receive compensation for the exercise or conversion[;].

[(xiii)]*(L)* [f]*F*or a member to participate with an issuer in the public distribution of a non-underwritten issue of securities if the issuer hires persons primarily for the purpose of distributing or assisting in the distribution of the issue, or for the purpose of assisting in any way in connection with the underwriting, except to the extent in compliance with 17 C.F.R. 240.3a4–1 and applicable state law.

[(xiv)]*(M)* [f]*F*or a member or person associated with a member to participate in a public offering of real estate investment trust securities, as defined in Rule 2340(c)(4), unless the trustee will disclose in each annual report distributed to investors pursuant Section 13(a) of the Act a per share estimated value of the trust securities, the method by which it was developed, and the date of the data used to develop the estimated value.

[(C) In the event that the underwriter and related persons receive securities deemed to be underwriting compensation in an amount constituting unfair and unreasonable compensation pursuant to the stock numerical limitation in subparagraph (B)(ix) above, the recipient shall return any excess securities to the issuer or the source from which received at cost and without recourse, except that in exceptional and unusual circumstances, upon good cause shown, a different arrangement may be permitted.]

[(7)]*(g) Lock-Up* Restriction[s] on Securities

[(A) No member or person associated with a member shall participate in any public offering which does not comply with the following requirements:]

[(i) securities deemed to be underwriting compensation shall not be sold, transferred, assigned, pledged or hypothecated by any person, except as provided in subparagraph (B) below, for a period of (a) one year following the effective date of the offering. However, securities deemed to be underwriting compensation may be transferred to any member participating in the offering and the bona fide officers or partners thereof and securities which are convertible into other types of securities or which may be exercised for the purchase of other securities may be so transferred, converted or exercised if all securities so transferred or received remain subject to the restrictions specified herein for the remainder of the initially applicable time period;]

[(ii) certificates or similar instruments representing securities restricted pursuant to subparagraph (i) above shall bear an appropriate legend describing the restriction and stating the time period for which the restriction is operative; and]

[(iii) securities to be received by a member as underwriting compensation shall only be issued to a member participating in the offering and the bona fide officers or partners thereof.]

(1) Lock-Up Restriction

In any public equity offering, other than a public equity offering by an issuer that can meet the requirements in subparagraphs (b)(7)(C)(i) or (ii) any common or preferred stock, options, warrants, and other equity securities of the issuer, including debt securities convertible to or exchangeable for equity securities of the issuer, that are unregistered and acquired by an underwriter and related person during 180 days prior to the required filing date, or acquired after the filing of the registration statement and deemed to be underwriting compensation by the NASD, and securities excluded from underwriting compensation pursuant to subparagraph (d)(5) above, shall not be sold during the offering, or sold, transferred, assigned, pledged, or hypothecated, or be the subject of any hedging, short sale, derivative, put, or call transaction that would result in the effective economic disposition of the securities by any person for a period of 180 days immediately following the date of effectiveness or commencement of sales of the public offering, except as provided in subparagraph (g)(2) below.

(2) Exceptions to Lock-Up Restriction

[(B) The provisions of subparagraph (A) notwithstanding:]

Notwithstanding subparagraph (g)(1) above, the following shall not be prohibited:

(A) the transfer of any security:

(i) by operation of law or by reason of reorganization of the issuer [shall not be prohibited.]*;*

(ii) to any member participating in the offering and the officers or partners thereof, if all securities so transferred remain subject to the lock-up restriction in subparagraph (g)(1) above for the remainder of the time period;

[(C) Venture capital restrictions. When a member participates in the initial public offering of an issuer's securities, such member or any officer,

director, general partner, controlling shareholder or subsidiary of the member or subsidiary of such controlling shareholder or a member of the immediate family of such persons, who beneficially owns any securities of said issuer at the time of filing of the offering, shall not sell such securities during the offering or sell, transfer, assign or hypothecate such securities for ninety (90) days following the effective date of the offering unless:]

[(i) the price at which the issue is to be distributed to the public is established at a price no higher than that recommended by a qualified independent underwriter who does not beneficially own 5% or more of the outstanding voting securities of the issuer, who shall also participate in the preparation of the registration statement and the prospectus, offering circular, or similar document and who shall exercise the usual standards of ''due diligence'' in respect thereto; or]

[(ii)] *(iii)* if the aggregate amount of [such] securities *of the issuer* held by [such a member and its related persons enumerated above would] *the underwriter or related person do* not exceed 1% of the securities being offered[.];

(iv) that is beneficially owned on a pro-rata basis by all equity owners of an investment fund, provided that no participating member manages or otherwise directs investments by the fund, and participating members in the aggregate do not own more than 10% of the equity in the fund;

(v) that is not an item of value under subparagraphs (c)(3)(B)(iv)–(vii) above;

(vi) that is eligible for the limited filing requirement in subparagraph (b)(6)(A)(iv)b and has not been deemed to be underwriting compensation under the Rule;

(vii) that was previously but is no longer subject to the lock-up restriction in subparagraph (g)(1) above in connection with a prior public offering (or a lock-up restriction in the predecessor rule), provided that if the prior restricted period has not been completed, the security will continue to be subject to such prior restriction until it is completed; or

(viii) that was acquired subsequent to the issuer's initial public offering in a transaction exempt from registration under SEC Rule 144A; or

(B) the exercise or conversion of any security, if all securities received remain subject to the lock-up restriction in subparagraph (g)(1) above for the remainder of the time period.

[(8)] *(h)* [Conflicts of Interest] Proceeds Directed to a Member[:]

(1) Compliance With Rule 2720

No member shall participate in a public offering of an issuer's securities where more than [ten (10) percent] *10%* of the net offering proceeds, not including underwriting compensation, are intended to be paid to [members participating in the distribution of the offering or associated or affiliated persons of such members, or members of the immediate family of such persons] *participating members*, unless the price at which an equity issue or the yield at which a debt issue is to be distributed to the public is established pursuant to Rule 2720(c)(3).

[(A)] *(2) Disclosure*

All offerings included within the scope of [this] subparagraph [(8)] *(h)(1)* shall disclose in the underwriting or plan of distribution section of the registration statement, offering circular or other similar document that the offering is being made pursuant to the provisions of this subparagraph and, where applicable, the name of the member acting as qualified independent underwriter, and that such member is assuming the responsibilities of acting as a qualified independent underwriter in pricing the offering and conducting due diligence.

[(B)] *(3) Exception From Compliance*

The provisions of [this] subparagraph*s* [(8)] *(h)(1) and (2)* shall not apply to:

[(i)] *(A)* an offering otherwise subject to the provisions of Rule 2720;

[(ii)] *(B)* an offering of securities exempt from registration with the Commission under Section 3(a)(4) of the Securities Act of 1933;

[(iii)] *(C)* an offering of a real estate investment trust as defined in Section 856 of the Internal Revenue Code; or

[(iv)] *(D)* an offering of securities subject to Rule 2810, unless the net offering proceeds are intended to be paid to the above persons for the purpose of repaying loans, advances or other types of financing utilized to acquire an interest in a pre-existing company.

[(d)] *(i)* Non-Cash Compensation

(1) Definitions

The terms ''compensation,'' ''non-cash compensation'' and ''offeror'' as used in this Section (d) of this Rule shall have the following meanings:

(A) ''Compensation'' shall mean cash compensation and non-cash compensation.

(B) ''Non-cash compensation'' shall mean any form of compensation received in connection with the sale and distribution of securities that is not cash compensation, including but not limited to merchandise, gifts and prizes, travel expenses, meals and lodging.

(C) ''Offeror'' shall mean an issuer, an adviser to an issuer, an underwriter and any affiliated person of such entities.

(2) Restrictions on Non-Cash Compensation

In connection with the sale and distribution of a public offering of securities, no member or person associated with a member shall directly or indirectly accept or make payments or offers of payments of any non-cash compensation, except as provided in this provision. Non-cash compensation arrangements are limited to the following:

(A) Gifts that do not exceed an annual amount per person fixed periodically by the Board of Governors [17] and are not preconditioned on achievement of a sales target.

(B) An occasional meal, a ticket to a sporting event or the theater, or comparable entertainment which is neither so frequent nor so extensive as to raise any question of propriety and is not preconditioned on achievement of a sales target.

(C) Payment or reimbursement by offerors in connection with meetings held by an offeror or by a member for the purpose of training or education of associated persons of a member, provided that:

(i) associated persons obtain the member's prior approval to attend the meeting and attendance by a member's associated persons is not conditioned by the member on the achievement of a sales target or any other incentives pursuant to a non-cash compensation arrangement permitted by subparagraph (d)(2)(D);

(ii) the location is appropriate to the purpose of the meeting, which shall mean an office of the issuer or affiliate thereof, the office of the member, or a facility located in the vicinity of such office, or a regional location with respect to regional meetings;

(iii) the payment or reimbursement is not applied to the expenses of guests of the associated person; and

(iv) the payment or reimbursement by the issuer or affiliate of the issuer is not conditioned by the issuer or an affiliate of the issuer on the achievement of a sales target or any other non-cash compensation arrangement permitted by subparagraph (d)(2)(D).

(D) Non-cash compensation arrangements between a member and its

[17] The current annual amount fixed by the Board of Governors is $100.

associated persons or a company that controls a member company and the member's associated persons, provided that no unaffiliated non-member company or other unaffiliated member directly or indirectly participates in the member's or non-member's organization of a permissible non-cash compensation arrangement; and

(E) Contributions by a non-member company or other member to a non-cash compensation arrangement between a member and its associated persons, provided that the arrangement meets the criteria in subparagraph (d)(2)(D).

A member shall maintain records of all non-cash compensation received by the member or its associated persons in arrangements permitted by subparagraphs (d)(2)(C)–(E). The records shall include: the names of the offerors, non-members or other members making the non-cash compensation contributions; the names of the associated persons participating in the arrangements; the nature and value of non-cash compensation received; the location of training and education meetings; and any other information that proves compliance by the member and its associated persons with subparagraph (d)(2)(C)–(E).

[e] *(j)* Exemptions

Pursuant to the Rule 9600 Series, the [Association may exempt a member or person associated with a member from the provisions of this Rule] *appropriate NASD staff*, for good cause shown *after taking into consideration all relevant factors, may conditionally or unconditionally grant an exemption from any provision of this Rule to the extent that such exemption is consistent with the purposes of the Rule, the protection of investors, and the public interest*.

2720. Distribution of Securities of Members and Affiliates—Conflicts of Interest

(a) General

No Change.

(b) Definitions

(1)–(8) No Change.

(9) Immediate family—*the* parents, mother-in-law, father-in-law, [husband or wife] *spouse*, brother or sister, brother-in-law or sister-in-law, son-in-law or daughter-in-law, and children *of an employee or associated person of a member, except any person other than the spouse and children who does not live in the same household as, have a business relationship with, provide material support to, or receive material support from, the employee or associated person of a member. In addition, the immediate family includes* [or] any other person who [is supported, directly or indirectly, to a material extent by] *either lives in the same household as, provides material support to, or receives material support from,* an employee [of,] or *associated* person [associated, with] *of* a member.

* * * * *

III. Self-Regulatory Organization's Statement of the Purpose of, and Statutory Basis for, the Proposed Rule Change

In its filing with the Commission, NASD included statements concerning the purpose of, and basis for, the proposed rule change and discussed any comments it received on the proposed rule change. The text of these statements may be examined at the places specified in Item IV below. NASD has prepared summaries, set forth in Sections A, B, and C below, of the most significant aspects of such statements.

A. Self-Regulatory Organization's Statement of the Purpose of, and Statutory Basis for, the Proposed Rule Change

1. Purpose

In January 2000, NASD filed with the SEC proposed amendments to the Corporate Financing Rule (''Rule'') to modernize and simplify the Rule (''original proposal''). The SEC published the original proposal for comment on April 11, 2000 [18] and received 14 comment letters.[19] In January 2001, NASD submitted Amendment No. 5 to the original proposal to respond to the comments (''amended proposal''). The SEC published the amended proposal for comment on March 14, 2001[20] and received 8 comment letters [21] described later in this Section. Amendment Nos. 6 through 10 respond to the comments received.

The Corporate Financing Rule regulates underwriting compensation and prohibits unfair arrangements in connection with public offerings of securities. The Rule requires members to submit registration statements for public offerings and other supplemental information to the Corporate Financing Department (''Department'') for review. In January 2000, NASD proposed comprehensive amendments to the Rule to modernize the Rule so that it would better reflect the various financial activities of multi-service firms.

The Commission has twice published for comment the proposed amendments. Commenters praised NASD for its decision to bring clarity and consistency to the application of the Rule. They also believed that the Rule should accommodate bona fide advisory and investment activities of NASD members while continuing to protect issuers and investors from unfair or unreasonable underwriting activities.

The original proposal contained an objective standard that members and the Department could follow to determine whether any ''item of value,'' such as fees and securities received by underwriters and their affiliates should be included in the calculation of underwriting compensation under the Rule. Under this standard, all items of value received by participating members within the 180 day period before the filing of a registration statement and up to the time of the offering's effectiveness or commencement of sales (the ''Review Period'') would be included, unless the items were received in a transaction that met certain exceptions contained in the Rule. The exceptions are intended to distinguish securities and other items of value acquired as consideration for underwriting services from securities and other items of value acquired as consideration for venture capital investments and other financial services.

In the original proposal, securities acquired during the 90 days before the registration statement was filed would have been counted as compensation per se, notwithstanding whether their acquisition otherwise would meet an exception. Industry commenters strongly opposed the 90-day per se requirement and recommended the adoption of several alternative exceptions. They also recommended that the Department retain some flexibility under the Rule to make case-by-case determinations regarding whether certain items of value should be deemed to be underwriting compensation.

[18] *See supra* note 6.

[19] As stated previously, these comment letters are discussed in the release cited in note.

[20] *See supra* note 10.

[21] Letters from Edward M. Alterman, Fried, Frank, Harris Shriver & Jacobson (''Fried Frank''), dated April 4, 2001; Goldman Sachs & Co. (''Goldman''), dated April 6, 2001; Michael T. Edsall, Kirkland & Ellis (Kirkland''), dated April 4, 2001; Christine Walsh, First Vice President and Co-Head of Investment Banking Counsel Corporate and Institutional Client Group, Merrill Lynch (''Merrill''), dated April 12, 2001; John Faulkner, Managing Director, Morgan Stanley Dean Witter (''Morgan''), dated April 10, 2001; Stuart J. Kaswell, General Counsel and Senior Vice President, Securities Industry Association (''SIA''), dated April 6, 2001; Linda DeRenzo, Testa, Hurwitz & Thibeault (''Testa''), dated April 3, 2001; and Morris N. Simkin, Winston & Strawn (''Winston''), dated February 27, 2001.

The amended proposal eliminates the 90-day *per se* requirement and adds the following:

- A 10% limitation on acquisitions of securities that meet the exception for ''purchases and loans by certain entities'' in paragraph (d)(5)(A) of Rule 2710 (''Exception 1'') and the exception for ''investments in and loans to certain issuers'' in paragraph (d)(5)(B) of Rule 2710 (''Exception 2'');
- A provision that excludes listed securities from being deemed an ''item of value;'
- The addition of insurance companies and banks as qualifying entities in Exception 1;
- An exception for securities received in connection with financial consulting and advisory arrangements, if the arrangement is detailed in a written agreement executed at least 12 months before filing; and,
- Tightened lock-up restrictions that prohibit derivative transactions that result in the effective economic disposition of locked-up shares.

The following is a description of proposed amendments to the amended proposal to which the Commission is granting accelerated approval. As noted previously, the Commission has published the filing for comment on two prior occasions.[22] All of the proposed changes from the amended proposal are in response to the comments on Amendment No. 5, except as indicated for non-substantive and conforming changes to the Rule. NASD also describes several suggestions made by the commenters that it does not support because they would not improve the Rule or would be inconsistent with its purposes.

1. Lock-Up Restrictions

The current Corporate Financing Rule imposes a one-year lock-up on securities deemed to be underwriting compensation. Securities of an issuer that are not deemed to be underwriting compensation, but are held by members of the underwriting syndicate in an IPO, are subject to a 90-day ''venture capital'' lock-up. The lock-up provisions in the Rule are intended primarily to protect the aftermarket in a new security from the potential for manipulation. The lock-up provisions as proposed to be amended also should ensure that securities acquired during the Review Period by an underwriter or related person that are not deemed to be compensation because they were acquired in transactions that meet one of the five proposed exceptions, were acquired and held as an investment in the issuer.

The original proposal replaced the one-year and 90-day lock-up provisions with a single 180-day lock-up. According to NASD, the 180-day lock-up is consistent with the industry practice to impose a 180-day lock-up on securities of the issuer held by its officers, directors and other insiders. The amended proposal further tightens the lock-up provision by prohibiting certain derivative transactions. NASD believes that this change should ensure that securities subject to the lock-up are held as an investment and minimize the opportunity for underwriters and related persons to realize a quick profit from cheap stock and warrants acquired from the issuer or its nominees during the Review Period.

Commenters (Goldman, Fried Frank, SIA and Testa) suggested changing language in the amended proposal that could be read to prevent members from participating in public offerings in which their affiliates or associated persons are selling security-holders. They also commented that the lock-up restrictions are too broad and recommended that the restrictions apply only to securities deemed to be underwriter compensation related to initial public offerings.

In response to these comments, NASD proposes to revise the language in the proposed amendments to clarify that members may participate in public offerings in which the members, their affiliates or associated persons are offering their shares or are selling security-holders of another issuer. NASD intended for the Rule to permit such participation, but the draft rule language was not clear on this point. The proposed amendments also would limit the 180-day lock-up to equity or convertible-to-equity securities and certain derivatives (''unregistered equity securities'') held by underwriters and related persons and acquired during the Review Period. NASD also proposes additional exceptions from the lock-up requirements in NASD Rule 2710(g)(2) to provide that debt securities and derivative instruments (1) that are not items of value, or (2) that are eligible for the limited filing requirement in NASD Rule 2710(b)(6)(A)(iv) and have not been deemed to be underwriting compensation by the Department under the Rule will not be locked up.

The proposed amendments retain the lock-up provision in connection with secondary offerings. Nevertheless, NASD believes that it is unusual for members and their affiliates to acquire privately placed, unregistered securities of issuers conducting secondary offerings, except pursuant to Rule 144A transactions. The proposed amendments would provide an exception from the lock-up restrictions for Rule 144A securities acquired after the completion of an issuer's IPO.

2. 10% Limitation

The original and amended proposals contained an objective standard that members and the Department would use to determine whether any ''item of value,'' such as fees and securities, received by underwriters and their affiliates must be included in the calculation of underwriting compensation under the Rule. Under this standard, all items of value received by a participating member during the Review Period would be included, unless the items were received in a transaction that met one of the enumerated exceptions contained in the proposal.

Exceptions 1 and 2 except from underwriting compensation, securities received as consideration for certain investments and loans by entities that are affiliates of members. These entities must meet certain capital and other requirements that are designed to ensure that they are engaged in bona fide businesses providing loans to, or venture capital investments in, other companies. The amended proposal also provided that the total amount of securities received by all entities related to a member in transactions meeting the requirements in Exceptions 1 and 2 may not exceed 10% of the issuer's total equity securities, calculated immediately following the transaction.

Some commenters (Fried Frank, Goldman, Kirkland, SIA and Testa) asserted that the 10% limitation undermined the usefulness of the exceptions and was unnecessary because the other requirements in the exceptions ensure that the transactions are bona fide investments or loans. NASD proposed to retain the limitation in Exceptions 1 and 2, but raise the threshold to 25%. NASD states that other conditions of the exceptions help to ensure that the transaction is a bona fide investment or loan, but a 25% limitation is a reasonable additional protection against the potential for overreaching and unfair arrangements. The 25% limitation would apply only to transactions that qualify for the particular exception. If, for example, a member receives unregistered equity securities as placement agent compensation in a transaction that qualifies under the third exception, those securities would not count toward the 25% limitation on the amount of securities that could be acquired by an

[22] *See supra* notes 6 and 10.

affiliated entity in a transaction that qualifies under Exception 1 or 2.

Exception 1 would apply the 25% threshold to all securities acquired during the Review Period, while Exception 2 would apply the 25% threshold to each acquisition of securities under that exception. Exception 1 is available for private placements and loans in which the only parties are the member's affiliate and the issuer. Accordingly, under Exception 1 a member's affiliate could structure a single financing as a series of transactions, each of which enable it to acquire no more than 25% of the issuer's total equity securities, but in combination would bring the affiliate's acquisitions well over the 25% level. By contrast, because the issuer's board of directors must approve each transaction in Exception 2, the amount of equity an issuer must provide as consideration for a particular mezzanine level financing would be certain and discrete. Consequently, Exception 1 would apply the 25% threshold to all securities acquired during the Review Period, while Exception 2 would apply the threshold on a transaction by transaction basis.

3. Entity Definition

A. *New Partnerships.* Exceptions 1 and 2 require entities to meet certain capital requirements and to be engaged in the business of making investments in or loans to other companies. Some commenters (Goldman and SIA) pointed out that many sponsors routinely carry out investment programs through a series of similar funds, although each individual fund may not meet the capital requirements in the exceptions. Other commenters (Fried Frank and Morgan) noted that a fund whose first investment is in the issuer would not be able to establish that it is engaged in the business of making investments and loans and thus it could not qualify for the exceptions, even though the fund is part of the investment program. These commenters recommended that NASD amend the Rule to treat as one entity all funds in a series of funds that are created to engage in the same business as prior funds in the series. The fund's capital and operating history thus would reflect those of the entire investment program for purposes of these exceptions. NASD does not support this change because it would introduce a highly subjective consideration (*i.e.*, whether a fund is part of an investment program) and would undermine the requirements that a qualifying entity demonstrate through its operating history that it is a bona fide business, and that it alone meets the capital standards in the exception.

B. *Group of Legal Persons.* The definition of ''entity'' for purposes of Exceptions 1 and 2 includes ''a group of legal persons'' that are contractually obligated to make co-investments *and* have previously made at least one such investment. This provision permits a group of entities to combine their capital for purposes of the exceptions, and thus permits certain joint ventures and partnerships that would not otherwise be deemed entities to take advantage of the exceptions. Some commenters recommended that the definition be broader and include: (1) entities that have entered into a co-investment agreement, but have not yet made a co-investment; or (2) entities that do not have a co-investment agreement, but have made previous co-investments. Given the potential abuse that could arise from an illegitimate ''grouping'' of different entities, the proposed amendments preserve the requirements of both a co-investment history and an agreement.

C. *Bank and Insurance Company Subsidiaries.* The amended proposal added insurance companies and banks as qualifying entities in Exception 1. These entities are separately regulated and engage in a line of business that is distinct from the underwriting business. Commenters (Goldman and SIA) suggested that because the definition of ''entity'' includes a wholly owned subsidiary of a qualifying entity, subsidiaries of banks and insurance companies could enjoy a competitive advantage over broker/dealer subsidiaries if they were not required to meet the capitalization requirements. The proposed amendments clarify that in order to qualify for the exception, subsidiaries and affiliates of banks and insurance companies that are not themselves regulated banks and insurance companies must separately meet the requirements in Exception 1.

4. Institutional Investor Definition

Rule 2710(d)(4)(B) defines ''institutional investor'' for purposes of Exception 2 and the exception for ''private placements with institutional investors'' in paragraph (d)(5)(C) of Rule 2710 (''Exception 3''). Under the amended proposal, no participating member could have any equity interest or management responsibility in an entity intending to qualify as an ''institutional investor.'' One commenter (Fried Frank) suggested that NASD amend the definition of ''institutional investor'' to permit some part of the equity interest in the entity to be held by participating members. The commenter claims that the application is otherwise too restrictive, especially with regard to widely held institutional entities like publicly owned companies or mutual funds.

In response to the comment, NASD proposes to amend the definition of ''institutional investor'' to permit a member to qualify for the exceptions so long as it holds no more than 5% of a publicly owned entity and no more than 1% of a non-public entity, such as a hedge fund.

5. Private Placements With Institutional Investors

Exception 3 addresses private placements in which: (1) Institutional investors acquire at least 51% of the total offering of the issuer's securities; (2) an institutional investor is the lead negotiator or lead investor with the issuer and establishes the terms of the private placement; and (3) underwriters and related persons do not acquire more than 20% of the total offering. Some commenters (Fried Frank and Goldman) claimed that it should be presumed that institutional investors participated in the negotiation of the transaction to the extent necessary to protect their interests if they acquire as much as 51% of an offering of privately placed securities, and that the ''lead negotiator'' or ''lead investor'' requirement is unnecessary. Some commenters further asserted that the 20% limitation is too low.

NASD does not propose any change to these provisions. NASD agrees that institutional investors generally will protect their interests, but the requirement that an unaffiliated institutional investor lead the negotiation or serve as lead investor is designed to prevent the potential overreaching that could occur if a member that is underwriting an issuer's public offering or its affiliate sets the price and terms of a private placement undertaken during the Review Period. Because the 20% limitation permits participating members to acquire only a relatively small portion of the issuer's equity in a private placement compared to the unaffiliated institutional investors, NASD views the limitation as reasonably designed to minimize the incentive for participating members to pressure an issuer to conduct the private placement for the member's benefit.

6. Transactions Completed Before Filing

Exceptions 1–3 require that the issuer's securities be acquired in transactions that occur before the required filing date of the public offering. Commenters (Fried Frank, Merrill, Morgan) suggested that, in view

of other safeguards built into the exceptions, this requirement should be deleted. Because an issuer's ability to negotiate at arm's length to raise capital directly from participating members may be particularly compromised once the members are actively engaged in soliciting investors in the public offering on behalf of the issuer, NASD believes it is appropriate to limit the exceptions to transactions that occur before filing a registration statement.

7. Preemptive Rights and Anti Dilution Rights

The exception for ''acquisitions and conversions to prevent dilution'' in paragraph (d)(5)(D) of Rule 2710 (''Exception 4'') would not apply to any purchase or acquisition that increases the participating member's percentage ownership of the same generic class of securities of the issuer. Some commenters (Fried Frank, Goldman, Merrill, Morgan and SIA) suggested that NASD revise Exception 4 to permit passive increases in ownership that may be the result of another investor's failure to exercise its own preemptive rights. NASD has revised the proposed amendments to make this change.

8. Purchases Based on a Prior Investment History

The exception for ''purchases based on a prior investment history'' in paragraph (d)(5)(E) of Rule 2710 (''Exception 5'') would provide an exception for acquisitions made in private placements during the Review Period by participating members in order to prevent dilution of a long-standing equity interest in the issuer. In order to be eligible for the exception, the investor must have made at least two prior purchases of the issuer's securities: One investment must have been made at least 24 calendar months before the required filing date and another more than 180 days before the required filing date. Commenters (Merrill, Morgan, SIA) suggested various shorter time period requirements for the initial acquisitions that would broaden the availability of the exception. NASD included Exception 5 in response to comments on the original proposal. The time periods correspond roughly to investments the Department has recognized in the course of its filing reviews as typical of early round financing by long-term venture capital investors in start-up companies in the late 1990's and 2000. According to NASD, the trend in the current market environment is that these time periods are being extended, not shortened. NASD believes that the proposed time periods are consistent with the purposes of, and other protections in, Exception 5.

9. Financial Consulting and Advisory Arrangements

The exception for ''financial consulting and advisory arrangements'' in paragraph (d)(5)(F) of Rule 2710 (''Exception 6'') addresses securities acquired in connection with financial consulting and advisory services. Codifying an exception for the receipt of securities as consideration for these services is in contrast to the proposed treatment of *cash* paid in connection with financial consulting and advisory services, which the Department proposed to continue to evaluate on a case-by-case basis to determine whether fees were in fact received in connection with underwriting services. A commenter (Fried Frank) suggested that the Department continue to evaluate whether the receipt of securities paid in connection with these services is underwriting compensation on a case-by-case basis, rather than relying solely on the proposed exception. NASD agrees that these arrangements are so fact specific that in many cases they do not fit well into the codified exception. Accordingly, the proposed amendments delete the codified exception. The Department will continue to analyze the receipt of both cash and securities in connection with financial consulting and advisory services based on the particular facts and circumstances in the arrangements.

10. Listed Securities

The amended proposal excluded from ''items of value,'' listed securities of the issuer that are purchased in public market transactions. Commenters (Fried Frank, Goldman and SIA) suggest that the exclusion is too narrow and should instead extend to securities that are freely trading or acquired in transactions with persons unaffiliated with the issuer. Alternatively, one commenter (SIA) suggested that the definition of listed securities should be amended to specify the markets and exchanges on which securities may be listed to qualify for the exception. NASD has amended the Rule to specify eligible markets and exchanges. NASD believes that expanding the definition to include all freely trading securities or those acquired from unaffiliated persons would create unacceptable opportunities to evade the Rule and consequently NASD has not adopted the change.

11. When Securities Are Considered Received

The original and amended proposals provided that securities will be considered ''received'' as of the date of the closing of the private placement, not at the date a commitment letter is signed. One commenter (Fried Frank) suggested that one relevant date should be the date on which the buyer is unconditionally bound to purchase. The Department made several, ultimately unsuccessful attempts to review commitment letters and work with counsel to determine whether market-out and other termination clauses typically found in commitment letters render them binding contracts. The date of closing a private placement, when beneficial ownership is transferred, continues to be the best and most reliable indicator of when securities are received. Consequently, NASD has not made the recommended change.

12. Items of Value Received After Completion of an Offering

The amended proposal would require members to file information with the Department regarding the receipt of items of value by participating members during the 90 day period following the effective date of a registration statement. One commenter (Fried Frank) asserted that the provision would be too burdensome. NASD believes that the information is necessary to prevent fraudulent conduct and that the provision is a reasonable, narrowly defined mechanism to ensure that members comply with the Rule.

13. Non-Qualified Employee Benefit Plans

The amended proposal would have excluded from items of value securities acquired through certain plans that qualify under Section 401 of the Internal Revenue Code. Commenters (Fried Frank and Goldman) suggested that the provision be expanded to include securities received under non-qualified employee benefit plans. Under such a revision, the Department staff would be required to investigate and analyze who owns the assets, directs the trading and exercises control in the various non-qualified plans. NASD is not confident that the Department would always be provided with all necessary information on a timely basis from which it could conclude that a particular plan is not, for example, substantially an investment vehicle for employees in the investment banking or syndicate departments, or their relatives or nominees. Consequently, NASD has not made the recommended change.

14. Non-Cash Compensation

One commenter (Winston) suggested that the Rule be amended so that its treatment of non-cash compensation conforms to the requirements in the rules regulating investment company sales charges and variable annuities. The proposed amendments do not address this issue. NASD currently is working on rule amendments that would address the issue comprehensively under both the Corporate Financing Rule and NASD Conduct Rule 2810 (Direct Participation Programs).

15. Certain Derivative Securities

NASD also proposes additional amendments to the definition of ''item of value'' so that it does not have the unintended effect of capturing within ''underwriting compensation'' certain derivative and other instruments that are entered into by members or related persons in the ordinary course of business. As proposed, the definition of ''items of value'' would include derivative instruments and certain other transactions that were not intended to be included in the compensation provisions. Accordingly, NASD proposes to add subsections (c)(3)(B)(vi) and (vii) to NASD Rule 2710, which provide that nonconvertible or non-exchangeable debt securities and derivative instruments acquired or entered into: (i) for a fair price; (ii) in the ordinary course of business; and (iii) in transactions unrelated to the public offering; are not ''items of value'' under the Rule. Because they are not items of value, they would also be excluded from the lock-up requirements in the Rule, as discussed above. In addition, any securities received in settlement of the derivative entered into at a fair price would not have any compensation value.

The term ''fair price'' would be defined in NASD Rule 2710(a)(9) to require that the underwriters and related persons have priced the non-convertible or non-exchangeable debt security or derivative instrument in good faith, on an arm's length basis, in a commercially reasonable manner, and in accordance with pricing methods and models and procedures used in the ordinary course of their business for pricing similar transactions. This ''fair price'' definition is intended to distinguish covered debt and derivative transactions from a transaction in which the benefit to the underwriter or related person is related to the underwriting or similar services provided to the issuer. The proposed definition would exclude a derivative instrument or other security received for acting as a private placement agent for the issuer, for providing or arranging a loan, credit facility, merger, acquisition or any other service, including underwriting services.

As stated above, proposed NASD Rule 2710(c)(3)(B)(vi) and (vii) would require that the non-convertible or non-exchangeable debt securities and derivative instruments be acquired or entered into ''in transactions unrelated to the public offering.'' Generally, if a transaction occurring within the review period is negotiated by personnel in a member's investment banking department, it would not be considered to be ''unrelated to the public offering.'' An exception to this general principle would be a put option or other derivative instrument that is entered into by an issuer with an underwriter or related person, in connection with a publicly disclosed share repurchase program. The public disclosure and transparent nature of the repurchase program distinguish the derivative transaction in support of the program from other privately negotiated transactions between the investment bankers and the issuer during the review period.

NASD determined not to define the term ''in the ordinary course of business'' for purposes of Rule 2710(c)(3)(B)(vi) and (vii). Whether a debt or derivative transaction between an issuer and an underwriter or related person is part of regular business services provided by the member to its clients or whether it is a customized transaction that is being offered in connection with a public offering depends on the particular facts and circumstances.

Under the proposed Rule, information regarding debt and derivative transactions that do not meet the ''in the ordinary course of business in transactions unrelated to the public offering'' requirement of Rule 2710(c)(3)(B)(vi) and (vii) would be required to be filed if the related public offering is subject to the filing requirements of the Rule. NASD proposes to amend the filing requirement in NASD Rule 2710(b)(6)(A)(iv), such that information initially filed in connection with debt securities and derivative instruments acquired or entered into for a ''fair price'' as defined in NASD Rule 2710(a)(9), but not excluded from items of value, may be limited to a brief description of the transaction and a representation that the transaction was (or if the pricing terms have not been set) will be entered into at a fair price as defined in NASD Rule 2710(a)(9). The required information would have to be submitted only with respect to the particular public offering to which a particular non-convertible or non-exchangeable debt security or derivative instrument relates. The Department would evaluate the information submitted in the same case-by-case manner that it will review financial consulting and advisory arrangements under the Rule.

IV. Commission Findings and Order Granting Accelerated Approval to Proposed Rule Change

The Commission finds that the proposed rule change is consistent with the Act and the rules and regulations thereunder applicable to a national securities association. In particular, the Commission finds that the proposed rule change is consistent with Section 15A(b)(6) of the Act,[23] which requires that an Association's rules be designed to prevent fraudulent and manipulative acts and practices, to promote just and equitable principles of trade, and to protect investors and the public interest.[24] The Commission believes that the proposed rule change should permit members to provide legitimate capital-raising services to issuers, while adopting restrictions that are designed to minimize the opportunity for abusive practices by members.

Current NASD Rule 2710 requires the terms of an underwriting to be fair and reasonable. Under the current Rule, any item of value, including certain securities of the issuer, acquired by the underwriter and related persons during the 12-month period before the filing date of a proposed public offering is examined by the Department to determine whether it was acquired ''in connection with the public offering'' and, therefore, is deemed to be underwriting compensation. The Rule presumes that any such item of value acquired during the six-month period before filing is underwriting compensation, but this presumption may be rebutted by the member based on information satisfactory to the Department. The proposed rule change replaces the current subjective standard with an objective standard under which all items of value received by an underwriter or related person during the 180 days before the required filing date of the registration statement or similar document will be considered to be underwriting compensation in connection with a public offering. Items

[23] 15 U.S.C. 78*o*–3(b)(6).

[24] In approving this rule, the Commission has considered the proposed rule's impact on efficiency, competition, and capital formation. 15 U.S.C. 78c(f).

of value that are not disclosed to NASD, and items of value that are received subsequent to the public offering, would be subject to post-offering review to determine whether they were underwriting compensation for the public offering. The proposed rule also contains five exceptions from the general rule that an ''item of value'' is deemed to be underwriting compensation. The Commission believes that replacing the subjective test with an objective, bright-line test should provide greater clarity and predictability regarding whether equity securities of the issuer and other items of value acquired by the underwriter and related persons constitute underwriting compensation. In addition, it should permit the NASD to better use its resources.

A. Six-Month Pre-Offering Test

As stated above, the proposed rule change replaces the current subjective standard with an objective standard under which all items of value received by an underwriter or related person during the 180-day period before the required filing date of the registration statement or similar document will be considered to be underwriting compensation in connection with a public offering. Under the current Rule, the Department examines all items of value acquired by the underwriter and related persons during the 12-month period before the filing date of a proposed public offering. The Commission believes that a bright-line test should provide greater clarity and predictability concerning application of the Rule to specific transactions. Consequently, members and their venture capital and lending affiliates should find it easier to determine at the time of a private placement or other financing whether their investment will be treated as underwriting compensation when the subsequent public offering is filed with the Department for review. The Commission also believes that shortening the time-frame from one year to six months is reasonable and reflects the NASD's experience that a longer time frame has generally been unnecessary to minimize the opportunity for abusive practices by members. The Commission also notes that commenters generally supported shortening the look-back period to 180 days.

Several commenters requested that the Rule be amended to provide that the 180-day review period be measured from the date that the preliminary prospectus is circulated, particularly because certain issuers file early with the SEC. According to NASD, members typically provide significant underwriting services in connection with the preparation and filing of a registration statement or other offering document. These underwriting activities are likely to have commenced during the 180-day period preceding the filing date. Consequently, the NASD is not going to amend the rule. The Commission believes it is reasonable for the NASD to measure the review period from the required filing date, rather than the date the preliminary prospectus is circulated.

B. Undisclosed and Post-Offering Compensation

The original proposal would have required the staff to examine items of value received by underwriters and related persons during the 90-day period immediately following the effective date of a public offering to determine whether they constitute underwriting compensation. Commenters expressed concern that the provision may subject members to disciplinary actions based upon the unknown activities by unaffiliated entities included in the definition of ''underwriter and related person.''

In response to the concerns of commenters, NASD narrowed the scope of the rule. As amended, proposed Rule 2710(d)(2) would provide that all items of value received and all arrangements entered into for the future receipt of an item of value by a participating member that are not disclosed to NASD before the date of effectiveness or the commencement of sales of a public offering (including items of value received after the public offering), are subject to post-offering review to determine whether such items of value are additional underwriting compensation for the public offering. In addition, subparagraph (b)(6)(vi)(b) would require the filing of any new arrangement that provides for receipt of an additional item of value subsequent to the issuance of an opinion of no objections to the underwriting arrangements by NASD and during the 90-day period following the date of effectiveness or commencement of the public offering. These provisions will enable NASD staff to consider whether items of value received after the public offering need to be included as underwriting compensation in order to avoid circumvention of the Rule.

C. Items of Value

Current Rule 2710(c)(3)(A) sets forth the items of value that are to be included in the calculation of underwriting compensation. NASD proposed to make non-substantive amendments to the description of the types of equity securities that are included. In addition, in response to comments, NASD is proposing several changes to Rule 2710(c)(3)(B), which sets forth exclusions from ''items of value.'' The proposal would expand this section by adding: (i) Cash compensation for acting as placement agent for a private placement or for providing a loan, credit facility, or for services in connection with a merger/acquisition; (ii) listed securities purchased in public market transactions; (iii) securities acquired through any stock bonus, pension, or profit-sharing plan that qualifies under Section 401 of the Internal Revenue Code; (v) securities acquired by an investment company registered under the Investment Company Act of 1940; (vi) non-convertible or non-exchangeable debt securities acquired for a fair price in the ordinary course of business in transactions unrelated to the public offering; and (vii) derivative instruments (and any securities received in settlement thereof) entered into for a fair price in the ordinary course of business in a transaction unrelated to the public offering.

The Commission believes that the proposal codifies exclusions for ''items of value'' that should not raise concerns about abuse and overreaching. As noted above, securities received in settlement of a derivative entered into at a fair price would not be considered an item of value. The Commission believes that it is reasonable to exempt any securities received in settlement of a derivative entered into at a fair price because the derivative transaction itself is not considered to be an item of value and, thus, the securities received in settlement (like any cash received in settlement in the case of a cash-settled derivative) would not represent any additional value.

Some commenters suggested that the exclusion for listed securities that are purchased in public market transactions is too narrow and should instead extend to securities that are freely trading or acquired in transactions with persons not affiliated with the issuer. Another commenter suggested that the definition of listed securities should be amended to specify the markets and exchanges on which securities may be listed to qualify for the exception. NASD has amended the Rule to specify eligible markets and exchanges. NASD believes that expanding the definition to include all freely trading securities or those acquired from unaffiliated persons would create unacceptable opportunities to evade the Rule. The Commission agrees.

D. Exceptions to the General Rule

The proposed rule change provides five exceptions from the general rule that items of value received within 180 days of the required filing date of a registration statement or similar document will be considered to be underwriting compensation.

1. Purchases and Loans by Certain Entities

The first exception in subparagraph (d)(5)(A) is intended for acquisitions of the issuer's securities by certain entities that routinely make investments in or provide loans or credit facilities to other companies. The exception would be available to an entity that: (i) Manages capital contributions or commitments of $100 million or more, at least $75 million of which has been contributed or committed by persons that are not participating members; (ii) manages capital contributions or commitments of $25 million or more, at least 75% of which has been contributed or committed by persons that are not participating members; (iii) is an insurance company as defined under Section 2(a)(13) of the Securities Act of 1933, or a foreign insurance company that has been given an exemption; or (iv) is a bank as defined in Section 3(a)(6) of the Act or is a foreign bank that has been granted an exemption. In addition to those requirements, the entity must: (i) Be a separate and distinct legal person from any member and not be registered as a broker-dealer; (ii) make investments or loans subject to the evaluation of individuals who have a contractual or fiduciary duty to select investments and loans based on risks and rewards, not on opportunities for the member to earn investment banking revenues; (iii) not participate directly in investment banking fees received by any participating member for underwriting public offerings; and (iv) have been primarily engaged in the business of making investments in or loans to other companies. Finally, all entities related to each member in acquisitions that qualify for this exemption cannot acquire more than 25% of the issuer's total equity securities during the review period.

The Commission believes that the proposed exceptions accommodate bona fide acquisitions by entities that regularly make venture capital investments. The Commission also believes that the limitations of the exception, such as the capital under management requirement, and the 25% acquisition limit, are reasonably designed to minimize the opportunity for abusive practices. The Commission notes that the acquisition limitation was previously proposed to be 10% of the issuer's total securities. In response to the concerns of commenters, NASD has proposed to raise this limit to 25%. The Commission believes that the other conditions of the exception should help to ensure that the transactions are bona fide investments or loans, and the 25% limitation is sufficient as a reasonable additional protection against overreaching and unfair arrangements.

2. Investments in and Loans to Certain Issuers

The second exception in subparagraph (d)(5)(B) is intended for acquisitions of securities of issuers that have significant institutional investor involvement in their corporate governance. Securities of the issuer purchased in a private placement or received as compensation for a loan or credit facility would be exempt if each entity: (i) Manages capital contributions or commitments of at least $50 million; (ii) is a separate and distinct legal person from any member and is not registered as a broker/dealer; (iii) does not participate directly in investment banking fees received by the member for underwriting public offerings; and (iv) has been primarily engaged in the business of making investments in or loans to other companies. The following additional requirements would apply: (i) Institutional investors must beneficially own at least 33% of the issuer's total equity securities, calculated immediately before the transaction; (ii) the transaction was approved by a majority of the issuer's board of directors and a majority of any institutional investors, or the designees of institutional investors, that are board members; and (iii) all entities related to each member in acquisitions that qualify for this exception do not acquire more than 25% of the issuer's total equity securities, calculated immediately following the transaction.

The Commission believes this exception is reasonable and should permit bona fide investments in issuers with significant institutional investor involvement in their corporate governance. The Commission believes that the limitations of this exception, such as the requirement of substantial involvement of institutional investors, should minimize the potential for overreaching and abuse. As stated above, the Commission notes that the acquisition limitation was previously proposed to be 10% of the issuer's total securities. In response to the concerns of commenters, NASD has proposed to raise this limit to 25%. The Commission believes that the other conditions of the exception should help to ensure that the transactions are bona fide investments or loans, and the 25% limitation is sufficient as a reasonable additional protection against overreaching and abuse.

a. Definition of ''Entity''

Exceptions 1 and 2 require entities to meet certain capital requirements and to be engaged in the business of making investments in or loans to other companies. Some commenters recommended that NASD amend the Rule to treat as one entity all funds in a series of funds that are created to engage in the same business as prior funds in the series. NASD determined not to adopt the suggested amendment because it believed that it would introduce a highly subjective consideration (*i.e.*, whether a fund is part of an investment program) and would undermine the requirement that a qualifying entity demonstrate through its operating history that it is a bona fide business, and that it alone meets the capital standards in the exception. The Commission believes that the proposed definition of ''entity'' is an objective standard that should be more easily administered by the Department than the standard suggested by comments. The Commission also believes that it is reasonable for the NASD to retain the requirement that each qualifying entity demonstrate through its operating history that it is a bona fide business.

In addition, the definition of ''entity'' for purposes of exceptions 1 and 2 includes ''a group of legal persons'' that are contractually obligated to make co-investments and have previously made at least one such investment. Some commenters recommended that the definition be broader and include: (1) Entities that have entered into a co-investment agreement, but have not yet made a co-investment; or (2) entities that do not have a co-investment agreement, but have made previous co-investments. NASD determined not to make this change because of the potential abuse that could arise from an illegitimate ''grouping'' of different entities; the proposed rule preserves the requirements of both a co-investment history and an agreement. The Commission believes that the proposed definition is reasonable and should minimize any potential for abuse.

3. Private Placements With Institutional Investors

Exception 3 would permit acquisitions in private placements that have significant institutional investor participation. This exception would permit private placements in which: (1)

Institutional investors acquire at least 51% of the total offering of the issuer's securities; (2) an institutional investor is the lead negotiator or lead investor with the issuer and establishes the terms of the private placement; and (3) underwriters and related persons do not acquire more than 20% of the total offering. Some commenters claimed that it should be presumed that institutional investors participated in the negotiation of the transaction to the extent necessary to protect their interests if they acquire as much as 51% of an offering of privately placed securities, and that the ''lead negotiator'' or ''lead investor'' requirement is unnecessary. Some commenters further asserted that the 20% limitation is too low.

NASD did not propose any changes in response to these comments. The Commission believes that the 20% limitation and the requirement that an unaffiliated institutional investor lead the negotiation or serve as lead investor are reasonable limitations designed to prevent the potential for overreaching that could occur if a member that is underwriting an issuer's public offering or its affiliate sets the price and terms of a private placement undertaken during the Review Period.

a. Definition of ''Institutional Investor''

For purposes of exceptions 2 and 3, ''institutional investor'' is defined as any individual or legal person that has at least $50 million invested in securities in the aggregate in its portfolio or under management, including investments held by its wholly owned subsidiaries; provided that no participating members direct or otherwise manage the institutional investor's investments or have an equity interest in the institutional investor, either individually or in the aggregate, that exceeds 5% for a publicly owned entity or 1% for a nonpublic entity. Under a previous version of the proposal, no participating member could have any equity interest or management responsibility in an entity intending to qualify as an ''institutional investor.'' Commenters stated that the definition of ''institutional investor'' should be amended to permit some part of the equity interest in the entity to be held by participating members. Other commenters stated that equity interest should not be the determinative factor, but rather control. In response to comments, NASD decided to amend the definition to allow an equity interest in the institutional investor, either individually or in the aggregate, of up to 5% for a publicly owned entity or 1% for a nonpublic entity. The Commisison believes that this limitation is reasonable and should help to ensure that only institutional investors that are independent of the influence of members will count for purposes of exceptions 2 and 3.

4. Acquisitions and Conversions To Prevent Dilution

Under the proposal, securities of the issuer would be excluded from underwriting compensation if the securities were acquired as the result of: (i) A qualifying right of preemption or a stock-split or a pro-rata rights or similar offering, or (ii) the conversion of securities that have not been deemed by NASD to be underwriting compensation. In addition, the only terms of the purchased securities that could be different from the terms of securities purchased by other investors would be pre-existing contractual rights that were granted in connection with a prior purchase. Further, the opportunity to purchase must have been provided to all similarly situated securityholders. Finally, the amount of securities purchased or received must not have increased the recipient's percentage ownership of the same generic class of securities of the issuer, except in the case of conversions and passive increases that result from another investor's failure to exercise its own rights.

Under a previous version of the proposal, this exception would not have applied to any purchase or acquisition that increased the participating member's percentage ownership of the same generic class of securities of the issuer. In response to comments, NASD revised the exception to permit passive increases in ownership that may be the result of another investor's failure to exercise its own preemptive rights.

The Commission agrees with NASD that this exception does not raise concerns about overreaching and abusive practices that the Rule was designed to address because purchases pursuant to a right of preemption are based on a purchase right granted to the purchaser in a prior investment and thus, the acquisition is not compensation for a subsequent public offering. The Commission further believes that the limitations of the exception should help to ensure that only securities acquired pursuant to a valid right of preemption will be eligible to be excluded from the underwriting exception. The Commission also believes that it is reasonable to permit passive increases in ownership that may be the result of another investor's failure to exercise its own preemptive rights. The Commission notes that shareholders frequently must decide whether to exercise their preemptive rights without knowing whether other shareholders will do the same. Consequently, without an exception for passive increases, it would be virtually impossible to determine in advance whether shares acquired pursuant to a right of preemption would be deemed underwriting compensation.

5. Purchases Based on a Prior Investment History

This exception would exempt acquisitions made in private placements during the Review Period by participating members in order to prevent dilution of a long-standing equity interest in the issuer. In order to be eligible for the exception, the investor must have made at least two prior purchases of the issuer's securities: one investment must be made at least 24 calendar months before the required filing date and another more than 180 days before the required filing date. Commenters suggested various shorter time period requirements for the initial acquisitions that would broaden the availability of the exception. NASD included this exemption in response to comments on the original proposal. NASD has stated that the time periods correspond roughly to investments the Department has recognized in the course of its filing reviews as typical of early round financing by long-term venture capital investors in start-up companies in the late 1990's and 2000. The Commission believes that this exemption is reasonable and would codify NASD's historic practice of exempting such securities from underwriting compensation. In addition, the Commission believes that the proposed time periods are reasonable in that they reflect NASD's experience with such acquisitions.

6. Financial Consulting and Advisory Arrangements

Prior versions of the proposal contained an exemption that addressed securities acquired in connection with financial consulting and advisory services. A commenter suggested that the Department continue to evaluate whether the receipt of securities paid in connection with these services are underwriting compensation on a case-by-case basis, rather than solely relying on the proposed exception. NASD determined that these arrangements are so fact specific that in many cases they do not fit well into a codified exception and, thus, proposed to delete this exception. Consequently, the Department would continue to analyze the receipt of both cash and securities in connection with financial consulting

and advisory services based on the particular facts and circumstances in the arrangements. The Commission believes that it is within NASD's discretion to delete this exception and to continue to review such acquisitions based on the particular facts and circumstances.

E. Lock-Up Restriction

Under the proposal, common or preferred stock, options, warrants, and other equity securities of the issuer that are unregistered and acquired by an underwriter and related person within 180 days before the filing of the registration statement, or acquired after the filing of the registration statement and deemed to be compensation by NASD, would be subject to a 180-day lock-up. The proposed lock-up also would prohibit certain derivative transactions.[25] In addition, the proposal contains several exceptions to the lock-up restriction for transfers of securities, including, but not limited to, transfers of securities that are not considered to be an item of value, transfers by operation of law or reorganization of the issuer, and transfers of securities that were previously, but no longer are, subject to a lock-up restriction in connection with a prior public offering.

Under the original version of the proposal, a 180-day lock-up restriction would have applied to all equity securities of the issuer that are held by any underwriter and related person at the time of effectiveness of the public offering, unless the securities or transaction complied with an exception. In response to comments, NASD determined to limit the 180-day lock-up to unregistered equity or convertible-to-equity securities and certain derivatives held by underwriters and related persons and acquired during the Review Period. Despite contrary views of commenters, NASD determined to retain the lock-up provision in connection with secondary offerings. However, the proposal would provide an exception from the lock-up restrictions for Rule 144A securities acquired after the completion of the issuer's IPO. In addition, in response to comments, NASD is proposing to amend the proposed rule change to clarify that members may participate in public offerings in which the members, their affiliates or associated persons are offering their shares or are selling security-holders of another issuer. NASD has stated that it intended to permit such participation, but the prior version of the proposal was unclear.

The Commission believes that the proposed lock-up restrictions, and exceptions thereto, are reasonably designed to protect the aftermarket in a new security from the potential for fraud and manipulation that exists when a member is an underwriter, actively trades the securities, and is a selling security-holder. The Commission further believes that the proposed prohibition against any hedging, short sale, derivative, put, or call transaction that would result in the effective economic disposition of the securities should help to prevent circumvention of the lock-up restrictions.

F. Exemptive Authority

Under the proposal, the NASD has retained the ability to grant exemptions from any provision of the Rule, if such exemption is consistent with the purposes of the Rule, the protection of investors, and the public interest. The Commission believes that this exemptive authority is reasonable and should give NASD the authority to exempt transactions that, although covered by the Rule, the Rule was not intended to address.

The Commission finds good cause for accelerating approval of Amendment Nos. 6, 7, 8, 9, and 10. The Commission notes that the proposed rule change has been previously published twice for comment.[26] Amendment Nos. 6 through 10 respond to the concerns previously raised by commenters and make certain technical corrections to the proposed rule change. Accordingly, the Commission finds that good cause exists, consistent with Sections 15A(b)(6) of the Act,[27] and Section 19(b)(2) of the Act[28] to accelerate approval of Amendment Nos. 6 through 10 to the proposed rule change prior to the thirtieth day after publication in the **Federal Register**.

V. Solicitation of Comments

Interested persons are invited to submit written data, views and arguments concerning Amendment Nos. 6 through 10, including whether the amendments are consistent with the Act. Persons making written submissions should file six copies thereof with the Secretary, Securities and Exchange Commission, 450 Fifth Street NW, Washington, DC 20549–0609. Comments may also be submitted electronically at the following e-mail address: *rulecomments@sec.gov.* All comment letters should refer to File No. SR–NASD–00–04. This file number should be included on the subject line if e-mail is used. To help the Commission process and review comments more efficiently, comments should be sent in hard copy or by e-mail but not by both methods.

Copies of the submission, all subsequent amendments, all written statements with respect to the proposed rule change that are filed with the Commission, and all written communications relating to the proposed rule change between the Commission and any person, other than those that may be withheld from the public in accordance with the provisions of 5 U.S.C. 552, will be available for inspection and copying in the Commission's Public Reference Room. Copies of such filing will also be available for inspection and copying at the principal office of NASD. All submissions should refer to File No. SR–NASD–00–04 and should be submitted by January 21, 2004.

VI. Conclusion

It is therefore ordered, pursuant to Section 19(b)(2) of the Act,[29] that the proposed rule change (SR–NASD–00–04), as amended, is approved, and Amendment Nos. 6 through 10 are approved on an accelerated basis.

For the Commission, by the Division of Market Regulation, pursuant to delegated authority.[30]

Jill M. Peterson,

Assistant Secretary.

[FR Doc. 03–32183 Filed 12–30–03; 8:45 am]

BILLING CODE 8010–01–P

SECURITIES AND EXCHANGE COMMISSION

[Release No. 34–48976; File No. SR–PCX–2003–68]

Self-Regulatory Organizations; Notice of Filing and Immediate Effectiveness of Proposed Rule Change by the Pacific Exchange, Inc. Relating to Exchange Fees and Charges

December 23, 2003.

Pursuant to section 19(b)(1) of the Securities Exchange Act of 1934 (''Act'')[1] and Rule 19b–4 thereunder,[2] notice is hereby given that on December 16, 2003, the Pacific Exchange, Inc. (''PCX'' or ''Exchange'') filed with the Securities and Exchange Commission

[25] However, as discussed above, debt securities and derivative instruments (1) that are not items of value, or (2) that are eligible for the limited filing requirement in NASD Rule 2710(b)(6)(A)(iv) and have not been deemed to be underwriting compensation by the Department under the Rule will not be subject to the lock-up.

[26] *See supra* notes 6 and 10.

[27] 15 U.S.C. 78*o*–3(b)(6).

[28] 15 U.S.C. 78s(b)(2).

[29] 15 U.S.C. 78s(b)(2).

[30] 17 CFR 200.30–3(a)(12).

[1] 15 U.S.C. 78s(b)(1).

[2] 17 CFR 240.19b–4.

(''Commission'') the proposed rule change as described in Items I, II and III below, which Items have been prepared by the PCX. The Commission is publishing this notice to solicit comments on the proposed rule change from interested persons.

I. Self-Regulatory Organization's Statement of the Terms of Substance of the Proposed Rule Change

The Exchange is proposing to amend the Trade-Related Charges portion of its Schedule of Fees and Charges (''Schedule''). The text of the proposed rule change is available at the Office of the Secretary, the PCX, and at the Commission.

II. Self-Regulatory Organization's Statement of the Purpose of, and Statutory Basis for, the Proposed Rule Change

In its filing with the Commission, the PCX included statements concerning the purpose of and basis for the proposed rule change and discussed any comments it received on the proposed rule change. The text of these statements may be examined at the places specified in Item IV below. The PCX has prepared summaries, set forth in sections A, B, and C below, of the most significant aspects of such statements.

A. Self-Regulatory Organization's Statement of the Purpose of, and Statutory Basis for, the Proposed Rule Change

1. Purpose

The Exchange is proposing to amend the Trade-Related Charges portion of its Schedule in order to create an incentive program for Market Makers with respect to transaction charges. Currently, Market Maker transactions are assessed a charge of $0.21 per contract side for all issues regardless of market share or Top 120 designation. As part of its ongoing effort to secure existing volumes and attract higher levels of liquidity, the PCX is proposing to adopt a three-tiered rate schedule that would lower transaction charges for Market Makers (including Lead Market Makers) as the Exchange attains higher levels of market share on individual issues.[3]

Specifically, the incentive program would lower marginal transaction costs on an issue-by-issue basis for those underlying symbols that the PCX attained market share beyond certain tiers. The three-tiered system is based on the percentage of market share attained for each issue and whether the issue is designated as a Top 120. The table below shows the marginal Market Maker transaction rates for Top 120 Issues:

Market share tiers	Marg rate
0.00% to 11.00%	$0.21
11.00% to 20.00%	0.11
20.00% to 100.00%	.....

Under the proposed rate schedule, the rates would be applied based on market share at the end of the trade month. The PCX proposes that these Market Maker transaction rates would be assessed in a fair and equitable manner to ensure that all Market Makers trading in a particular issue receive the same rate incentives. Accordingly, a Top 120 issue that had 1,000,000 contracts in national volume and a 30% PCX market share (or 300,000 PCX contracts) would be billed in the following manner. The first 11% in market share would be billed at a transaction rate of $0.21 per contract (11% × 1,000,000 × $0.21=$23,100). The next 9% in market share would be billed at a transaction rate of $.11 per contract (9% × 1,000,000 × $0.11 = $9,900). The final 10% in market share would be billed at a transaction rate of $0.00. The net effective rate on said issue would be $0.11 per contract (total transaction charges/total PCX market maker contracts or $33,000/300,000 contracts). All Market Makers would receive the same rate incentive because all Market Maker volumes in that issue would be charged the same effective rate: $0.11 per contract.[4]

Rates for issues that are not in the Top 120 in terms of national volume will still benefit from the rate incentive, albeit employing a different set of marginal rates. The table below summarizes those marginal transaction rates for Market Makers:

Market share tiers	Marg rate
0% to 15%	$0.21
15% to 25%	0.15
25% to 100%	0.05

Using the previous example, an issue that was not in the Top 120 but had the same contract volumes would receive the following billing treatment. The first 15% in market share would be billed at a transaction rate of $0.21 per contract (15% × 1,000,000 × $0.21=$31,500). The next 10% in market share would be billed at a transaction rate of $.15 per contract (10% × 1,000,000 × $0.15 = $15,000). The final 5% in market share would be billed at a transaction rate of $0.05 (5% × 1,000,000 × $0.05 = $2,500). The net effective rate on said issue would be $0.1633 per contract ($49,000 in charges divided by 300,000 contracts). The PCX believes all Market Makers would receive the same rate incentive because all Market Maker volumes in that issue would be charged at the same effective rate: $0.1633 per contract. Singly listed issues would continue to be billed at the current flat Market Maker transaction rate of $0.21 per contract.

The Exchange believes that the incentive program will help the PCX attract higher levels of liquidity and therefore enable the PCX to compete aggressively with other market centers. Moreover, the PCX believes the incentive program provides for a natural means of attracting more crowd participation on the trading floor. The incentive program will apply equally to issues traded on the POETS and the PCX Plus trading platforms.

2. Statutory Basis

The Exchange believes that the proposed rule change is consistent with the Act and the rules and regulations thereunder applicable to a national securities exchange and, in particular, the requirements of section 6(b) of the Act.[5] Specifically, the Exchange believes the proposed rule change is consistent with the section 6(b)(4) requirements that the rules of the exchange provide for the equitable allocation of reasonable dues, fees, and other charges among its members.

B. Self-Regulatory Organization's Statement on Burden on Competition

The Exchange does not believe that the proposed rule change will impose any burden on competition that is not necessary or appropriate in furtherance of the purposes of the Act.

C. Self-Regulatory Organization's Statement on Comments on the Proposed Rule Change Received From Members, Participants, or Others

Written comments on the proposed rule change were neither solicited nor received.

III. Date of Effectiveness of the Proposed Rule Change and Timing for Commission Action

The foregoing proposed rule change has become effective pursuant to section

[3] The Exchange states that transaction charges will not change for Customer, Firm or Broker/Dealer transactions.

[4] For purposes of simplicity, this example assumes that all PCX contracts were executed by Market Makers. In the event this was not the case, for example, the Exchange had the same contract volumes but 100,000 contracts were customer contracts and 200,000 Market Maker contracts, Market Makers would still receive the same rate incentive: $0.11 per Market Maker contract.

[5] 15 U.S.C. 78f(b).

19(b)(3)(A)(ii) of the Act[6] and Rule 19b–4(f)(2)[7] thereunder, because it establishes or changes a due, fee, or other charge imposed by the Exchange. Accordingly, the proposal will take effect upon filing with the Commission. At any time within 60 days of the filing of such proposed rule change, the Commission may summarily abrogate such rule change if it appears to the Commission that such action is necessary or appropriate in the public interest, for the protection of investors, or otherwise in furtherance of the purposes of the Act.

IV. Solicitation of Comments

Interested persons are invited to submit written data, views and arguments concerning the foregoing, including whether the proposal is consistent with the Act. Persons making written submissions should file six copies thereof with the Secretary, Securities and Exchange Commission, 450 Fifth Street, NW., Washington, DC 20549. Comments may also be submitted electronically at the following e-mail address: *rule-comments@sec.gov.* All comment letters should refer to File No. SR–PCX–2003–68. This file number should be included on the subject line if e-mail is used. To help the Commission process and review your comments more efficiently, comments should be sent in hardcopy or by e-mail but not by both methods. Copies of the submission, all subsequent amendments, all written statements with respect to the proposed rule change that are filed with the Commission, and all written communications relating to the proposed rule change between the Commission and any person, other than those that may be withheld from the public in accordance with the provisions of 5 U.S.C. 552, will be available for inspection and copying in the Commission's Public Reference Room. Copies of such filing will also be available for inspection and copying at the principal office of the PCX. All submissions should refer to File No. SR–PCX–2003–68 and should be submitted by January 21, 2004.

For the Commission, by the Division of Market Regulation, pursuant to delegated authority.[8]

Margaret H. McFarland,

Deputy Secretary.

[FR Doc. 03–32175 Filed 12–30–03; 8:45 am]

BILLING CODE 8010–01–P

[6] 15 U.S.C. 78(s)(b)(3)(A)(ii).

[7] 17 CFR 240.19b–4(f)(2).

[8] 17 CFR 200.30–3(a)(12).

SECURITIES AND EXCHANGE COMMISSION

[Release No. 34–48983; File No. SR–Phlx–2003–80]

Self-Regulatory Organizations; Notice of Filing and Immediate Effectiveness of Proposed Rule Change by the Philadelphia Stock Exchange, Inc. To Revise Its Schedule of Dues, Fees and Charges To Provide a Rebate for Certain Trades Executed Pursuant to a Dividend Spread Strategy

December 23, 2003.

Pursuant to section 19(b)(1) of the Securities Exchange Act of 1934 (''Act'')[1] and Rule 19b–4 thereunder,[2] notice is hereby given that on December 15, 2003, the Philadelphia Stock Exchange, Inc. (''Phlx'' or ''Exchange'') submitted to the Securities and Exchange Commission (''Commission'') the proposed rule change as described in Items I, II, and III below, which Items have been prepared by the Exchange. The Commission is publishing this notice to solicit comments on the proposed rule change.

I. Self-Regulatory Organization's Statement of the Terms of Substance of the Proposed Rule Change

The Phlx proposes to amend its schedule of dues, fees and charges to provide a rebate for certain trades executed pursuant to a dividend spread strategy.[3] The proposed rebate would be effective for trades clearing on and after December 17, 2003.

The schedule of dues, fees and charges is available at the Office of the Secretary, the Phlx, and at the Commission.

II. Self-Regulatory Organization's Statement of the Purpose of, and Statutory Basis for, the Proposed Rule Change

In its filing with the Commission, the Exchange included statements concerning the purpose of and basis for the proposed rule change and discussed any comments it received on the proposed rule change. The text of these statements may be examined at the places specified in Item IV below. The Exchange has prepared summaries, set forth in sections A, B, and C below, of the most significant parts of such statements.

[1] 15 U.S.C. 78s(b)(1).

[2] 17 CFR 240.19b–4.

[3] A ''dividend spread'' is any trade done within a defined time frame in which a dividend arbitrage can be achieved between any two (2) deep-in-the-money options.

A. Self-Regulatory Organization's Statement of the Purpose of, and Statutory Basis for, the Proposed Rule Change

1. Purpose

The Exchange states that the purpose of the proposed rule change is to amend the Exchange's schedule of dues, fees and charges to adopt a rebate for certain contracts executed in trades occurring as part of a dividend spread strategy. Specifically, for those options contracts executed pursuant to a dividend spread strategy by member registered options traders (''ROT'') and options specialists who have not elected to have the specialist unit fixed monthly fee (''non-fixed specialists'')[4] be applicable on the business day before the underlying stock's ex-date,[5] the Exchange would rebate $0.08 per contract side for ROT executions and $0.07 per side for non-fixed specialists executions. The proposed rebate would be effective for trades clearing on and after December 17, 2003.

The Exchange's billing system is unable to distinguish between dividend spreads and other types of trades. The Exchange has therefore developed a manual procedure to implement the proposed rebate. Specifically, within thirty calendar days of the billing period (*i.e.*, within thirty days from the issue date of the invoice) for these transactions, a Fee Reimbursement Form, including the appropriate documentation, must be completed and submitted to the Exchange. After the appropriate verification and subsequent acceptance, the Exchange would credit the appropriate member's account for the amount of the rebate (*i.e.*, either $0.08 or $0.07 per contract side) charged on contracts executed in trades occurring as part of a dividend spread strategy.

The Exchange states that the primary reason for this fee is to create a cost effective environment for a dividend spread strategy to be executed. By keeping fees low, the Exchange believes that this program should encourage specialists and registered options traders to provide liquidity for these

[4] Specialist units that have been active trading equity and index option books in the capacity of a specialist unit for at least one year from September 1, 2002 may elect to pay a fixed monthly charge as described in the Exchange's fee schedule. A specialist unit may, by the 15th day of the billing month, select the fixed monthly fee methodology for subsequent months, which would be continued until February 29, 2004. *See* Securities Exchange Act Release No. 48459 (September 8, 2003), 68 FR 54034 (September 15, 2003).

[5] The ex-date is the date on or after which a security is traded without a previously declared dividend or distribution. After the ex-date, a stock is said to trade ex-dividend.

types of financial strategies and should permit the Exchange to remain competitive.

2. Statutory Basis

The Exchange believes that the proposed rule change is consistent with section 6(b) of the Act [6] in general, and furthers the objectives of section 6(b)(4) of the Act [7] in particular, because it is designed to provide for the equitable allocation of reasonable dues, fees, and other charges among its members. The Exchange notes that although the rebate would result in a net transaction charge of $0.11 per contract side for a ROT and $0.14 per contract side for non-fixed specialist executions, ROTs pay an additional comparison charge of $0.03. Thus, both member organizations—ROTs and non-fixed specialist—would pay the same net per contract side charge.

B. Self-Regulatory Organization's Statement on Burden on Competition

The Exchange does not believe that the proposed rule change will impose any inappropriate burden on competition.

C. Self-Regulatory Organization's Statement on Comments on the Proposed Rule Change Received From Members, Participants, or Others

No written comments were either solicited or received.

III. Date of Effectiveness of the Proposed Rule Change and Timing for Commission Action

The proposed rule change has become effective pursuant to section 19(b)(3)(A)(ii) of the Act [8] and subparagraph (f)(2) of Rule 19b–4 thereunder [9] because it establishes or changes a due, fee, or other charge imposed by the Exchange. At any time within 60 days of the filing of such proposed rule change, the Commission may summarily abrogate such rule change if it appears to the Commission that such action is necessary or appropriate in the public interest, for the protection of investors, or otherwise in furtherance of the purposes of the Act.

IV. Solicitation of Comments

Interested persons are invited to submit written data, views and arguments concerning the foregoing, including whether the proposed rule change is consistent with the Act. Persons making written submissions should file six copies thereof with the Secretary, Securities and Exchange Commission, 450 Fifth Street, NW., Washington, DC 20549–0609. Comments may also be submitted electronically at the following e-mail address: *rule-comments@sec.gov.* All comment letters should refer to File No. SR–Phlx–2003–80. This file number should be included on the subject line if e-mail is used. To help the Commission process and review your comments more efficiently, comments should be sent in hardcopy or by e-mail but not by both methods. Copies of the submission, all subsequent amendments, all written statements with respect to the proposed rule change that are filed with the Commission, and all written communications relating to the proposed rule change between the Commission and any person, other than those that may be withheld from the public in accordance with the provisions of 5 U.S.C. 552, will be available for inspection and copying in the Commission's Public Reference Room. Copies of the filing will also be available for inspection and copying at the principal office of the Phlx. All submissions should refer to File No. SR–Phlx–2003–80 and should be submitted by January 21, 2004.

For the Commission, by the Division of Market Regulation, pursuant to delegated authority.[10]

Margaret H. McFarland,

Deputy Secretary.

[FR Doc. 03–32174 Filed 12–30–03; 8:45 am]

BILLING CODE 8010–01–P

[6] 15 U.S.C. 78f(b).

[7] 15 U.S.C. 78f(b)(4).

[8] 15 U.S.C. 78s(b)(3)(A)(ii).

[9] 17 CFR 240.19b–4(f)(2).

[10] 17 CFR 200.30–3(a)(12).

SECURITIES AND EXCHANGE COMMISSION

[Release No. 34–48961; File No. SR–NASD–2003–176]

Self-Regulatory Organizations; Notice of Filing of Proposed Rule Change by the National Association of Securities Dealers, Inc. Relating to Chief Executive Officer and Chief Compliance Officer Certification

December 23, 2003.

Pursuant to section 19(b)(1) of the Securities Exchange Act of 1934 (''Act'') [1] and Rule 19b–4 thereunder,[2] notice is hereby given that on November 28, 2003, the National Association of Securities Dealers, Inc. (''NASD'') filed with the Securities and Exchange Commission (''SEC'' or ''Commission'') the proposed rule change as described in Items I, II, and III below, which Items have been prepared by NASD. The Commission is publishing this notice to solicit comments on the proposed rule change from interested persons.

I. Self-Regulatory Organization's Statement of the Terms of Substance of the Proposed Rule Change

NASD is proposing to establish NASD Rule 3013 and accompanying Interpretive Material (''IM'') 3013 to require each member to designate a chief compliance officer (''CCO'') and further require the member's chief executive officer (''CEO'') and CCO to certify annually to having in place a process to establish, maintain, review, modify, and test policies and procedures reasonably designed to achieve compliance with applicable NASD rules, MSRB rules and the federal securities laws. Below is the text of the proposed rule change. Proposed new language is in *italics*.

* * * * *

3013. Annual Certification of Compliance and Supervisory Processes

(a) Designation of Chief Compliance Officer

Each member shall designate and specifically identify to NASD on Schedule A of Form BD a principal to serve as chief compliance officer.

(b) Annual Certification

Each member shall have its chief executive officer (or equivalent officer) and chief compliance officer jointly certify annually, as set forth in IM–3013, that the member has in place processes to establish, maintain, review, test and modify written compliance policies and written supervisory procedures reasonably designed to achieve compliance with applicable NASD rules, MSRB rules and federal securities laws and regulations.

IM–3013. Annual Compliance and Supervision Certification

The NASD Board of Governors is issuing this interpretation to the requirement under Rule 3013(b), which requires that the member's chief executive officer (or equivalent officer) and chief compliance officer execute annually [1] a certification that the member has in place processes to establish, maintain, review, test and modify written compliance policies and written supervisory procedures reasonably designed to achieve compliance with applicable NASD

[1] 15 U.S.C. 78s(b)(1).

[2] 17 CFR 240.19b–4.

[1] Members must ensure that each ensuing annual certification is effected no later than on the anniversary date of the previous year's certification.

rules, MSRB rules and federal securities laws. The certification shall state the following:

Annual Compliance and Supervision Certification

The undersigned are respectively the chief executive officer (or equivalent officer) and chief compliance officer of [name of member corporation/ partnership/sole proprietorship] (the ''Member''). As required by NASD Rule 3013(b), the undersigned make the following certification:

1. The Member has in place processes to:

(a) establish and maintain policies and procedures reasonably designed to achieve compliance with applicable NASD rules, MSRB rules and federal securities laws;

(b) modify such policies and procedures as business, regulatory and legislative changes and events dictate; and

(c) test the effectiveness of such policies and procedures on a periodic basis, the timing and extent of which is reasonably designed to ensure continuing compliance with NASD rules, MSRB rules and federal securities laws;

2. The Member's processes, with respect to item 1 above, are evidenced in a report reviewed by the chief executive officer (or equivalent officer), chief compliance officer and such other officers as the Member may deem necessary to make this certification. These processes at a minimum must include: (a) one or more meetings between the chief executive officer (or equivalent officer) and the chief compliance officer to discuss and review the matters that are the subject of this certification and (b) review of the report by the Member's board of directors and audit committee; and

3. The undersigned chief executive officer (or equivalent officer), chief compliance officer and other officers as applicable (referenced in item 2 above) have consulted with or otherwise relied on those employees, officers, outside consultants, lawyers and accountants, to the extent they deem appropriate, in order to attest to the statements made in this certification.

It is critical that each NASD member understand the importance of employing comprehensive and effective compliance policies and written supervisory procedures. Compliance with applicable NASD rules, MSRB rules and federal securities laws and rules is the foundation of ensuring investor protection and market integrity and is essential to the efficacy of self-regulation. Consequently, the certification requirement is intended to require processes by each member to establish, maintain, review, test and modify its compliance policies and written supervisory procedures in light of the nature of its businesses and the laws and rules that are applicable thereto, and to evidence such processes in a report reviewed by those executing the certification.

The execution of the certification by the chief compliance officer (and other designated officers with primary compliance responsibility) is intended to ensure that the person(s) charged with managing the member's compliance program has regular and significant interaction with senior management concerning the subject matter of the certification. The rule permits co-certifications by other compliance officers that report to the chief compliance officer. However, the NASD Board of Governors expects that any such co-certifications will be executed only by senior compliance officers that have primary compliance responsibility over a segment of a member's business operations.

The NASD Board of Governors recognizes that supervisors with business line responsibility are accountable for the discharge of a member's compliance policies and written supervisory procedures. The signatories to the certification are certifying only as to having processes in place to establish, maintain, review, test and modify the member's written compliance and supervisory policies and procedures and the execution of this certification does not by itself establish business line responsibility.

The requirement to designate a chief compliance officer does not preclude such person from holding any other position within the member, including the position of chief executive officer, provided that such person can discharge the duties of a chief compliance officer in light of his or her other additional responsibilities. The requirement that a member's processes include a review of the report (required by item 2 of the certification) by the board of directors and audit committee does not apply to members that do not utilize these types of governing bodies and committees in the conduct of their business.[2]

The report required in item 2 of the certification must document the member's processes for establishing, maintaining, reviewing, testing and modifying compliance policies. The report must be produced prior to execution of the certification and be reviewed by the chief executive officer (or equivalent officer), chief compliance officer and any other officers the member deems necessary to make the certification. The report should include the manner and frequency in which the processes are administered, as well as the identification of officers and supervisors that have responsibility for such administration. The report need not contain any conclusions produced as a result of following the processes set forth therein. The report may be combined with any other compliance report or other similar report required by any other self-regulatory organization provided that (1) such report is clearly titled in a manner indicating that it is responsive to the requirements of the certification and this Interpretive Material; (2) a member that submits a report for review in response to an NASD request must submit the report in its entirety; and (3) the member makes such report in a timely manner, i.e., annually.

* * * * *

[2] *Members, as a part of their process, must have the report reviewed by their governing bodies and committees that serve similar functions in lieu of a board of directors and audit committee.*

II. Self-Regulatory Organization's Statement of the Purpose of, and Statutory Basis for, the Proposed Rule Change

In its filing with the Commission, NASD included statements concerning the purpose of and basis for the proposed rule change and discussed any comments it received on the proposed rule change. The text of these statements may be examined at the places specified in Item IV below. NASD has prepared summaries, set forth in Sections A, B, and C below, of the most significant aspects of such statements.

A. Self-Regulatory Organization's Statement of the Purpose of, and Statutory Basis for, the Proposed Rule Change

1. Purpose

Comprehensive compliance and supervisory systems constitute the bedrock of effective securities industry self-regulation and the primary strata of investor protection. As such, NASD believes that a member's senior management should focus the same attention to a member's compliance and supervisory policies and procedures as is accorded to a member's revenue-producing businesses and such fundamental operational prerequisites as, for example, net capital requirements.

To that end, NASD is proposing a rule change that would bolster investor

protection by promoting regular and meaningful interaction between senior management and compliance personnel to ensure that compliance is given the highest priority by a member's senior executive officers. Specifically, the proposed rule change would require (1) that each member designate a principal to serve as CCO and (2) the CEO and CCO to certify annually to having in place processes to establish, maintain, review, modify, and test policies and procedures reasonably designed to achieve compliance with applicable NASD rules, MSRB rules and federal securities laws.

As to the former, NASD Rule 1022 currently requires a person designated as a CCO on Schedule A of Form BD to be registered as a General Securities Principal unless certain exceptions apply.[3] However, the current rules do not require that a member so designate such a person. The proposed rule change would mandate that a member designate a CCO and identify that person on Schedule A of Form BD.

With respect to the certification, the proposed rule change also would require the CEO and CCO to certify annually that senior executive management has in place processes to (1) establish and maintain policies and procedures reasonably designed to achieve compliance with applicable NASD rules, MSRB rules and federal securities laws; (2) modify such policies and procedures as business, regulatory and legislative changes and events dictate; and (3) test the effectiveness of such policies and procedures on a periodic basis, the timing of which is reasonably designed to ensure continuing compliance with NASD rules, MSRB rules and the federal securities laws. The proposed rule change further would require the CEO and CCO to certify that those processes are evidenced in a report that has been reviewed by those executing the certification, as well as the member's board of directors and audit committee.[4] Notably, the processes, at a minimum, must include one or more meetings between the CEO and CCO to discuss and review the matters that are subject of the certification.

The proposed rule change also would create IM–3013, which sets forth the language of the certification and gives further guidance as to the requirements and limitations of the rule. For example, the interpretive material clarifies that the person designated as CCO also may hold other positions within the member, including CEO, provided that individual can effectively discharge the CCO responsibilities while maintaining another position. Thus, resource-constrained members are not required to hire or designate a dedicated CCO. The proposed interpretive material also explains that the rule permits co-certifications by other compliance officers that report to the CCO, provided those individuals are senior compliance officers who have primary responsibility over a segment of the member's business operations.

The proposed interpretive material further recognizes that responsibility for discharging compliance policies and written supervisory procedures rests with business line supervisors. The proposed interpretive material clarifies that execution of the certification does not by itself establish a signatory as having such line supervisory responsibility.

The proposed interpretive material also sets forth the particulars regarding the report that must evidence a member's compliance processes. It states that the report must be produced prior to execution of the certification and reviewed by the CEO, CCO and such other officers as the member deems necessary. The report also must include the manner and frequency in which the processes are administered and identify those officers and supervisors with responsibility for such administration. The proposed interpretive material further explains that the report need not contain conclusions that result from following the specified processes, such as compliance deficiencies. Additionally, the proposed interpretive material states that the report may be combined with other reports required by a self-regulatory organization, provided the report is made annually, clearly indicates in the title that it contains the information required by Rule 3013, and that the entire report is provided in response to any regulatory request for all or part of the combined report.

Finally, with respect to review of the report, the proposed interpretive material clarifies that review by a member's board of directors and audit committee only applies to those members whose corporate governance structure have such or similar governing bodies and committees—it does not impose a requirement that members create them if they do not currently exist.

The proposal would complement and underscore the closely related obligations that currently exist under NASD rules that require each member to designate principals who must review the member's supervisory systems and procedures and recommend to senior management appropriate action to ensure the systems are reasonably designed to achieve compliance with applicable rules and regulations.[5] NASD believes the proposal provides an effective mechanism to compel substantial and purposeful interaction between senior management and compliance personnel, thereby enhancing the quality of members' supervisory and compliance systems. NASD further believes the rule change imposes the minimal additional burden on members that is necessary to achieve the proposal's purpose.

2. Statutory Basis

NASD believes that the proposed rule change is consistent with the provisions of Section 15A(b)(6) of the Act, which requires, among other things, that NASD's rules must be designed to prevent fraudulent and manipulative acts and practices, to promote just and equitable principles of trade, and, in general, to protect investors and the public interest. NASD believes that that the proposed rule change is consistent with the provisions of the Act noted above in that it will enhance focus on members' compliance and supervision systems, thereby decreasing the likelihood of fraud and manipulative acts and increasing investor protection.

B. Self-Regulatory Organization's Statement on Burden on Competition

NASD does not believe that the proposed rule change will result in any burden on competition that is not necessary or appropriate in furtherance of the purposes of the Act.

C. Self-Regulatory Organization's Statement on Comments on the Proposed Rule Change Received from Members, Participants, or Others

In June 2003, NASD issued Notice to Members 03–29, seeking comment on a different proposal with similar objectives. That proposal would have required each member to designate a CCO and further required that the CCO and CEO certify annually to the

[3] *See* Notice to Members 01–51 (August 2001).

[4] Members that do not employ a board of directors or audit committee or other similar bodies in their governance and management would not be subject to this requirement.

[5] *See* 3010(a)(8). NASD has filed with the Commission a proposed rule change that would incorporate the requirements of Rule 3010(a)(8) into new Rule 3012 and eliminate Rule 3010(a)(8) altogether. If the proposed rule change is approved, Rule 3012 would require members to designate one or more principals who will establish, maintain, and enforce a system of supervisory control policies and procedures that test and verify that the member's supervisory procedures are reasonably designed to achieve compliance with applicable securities laws and NASD rules and amend supervisory procedures where the need is identified. *See* SR–NASD–2002–162.

adequacy of the member's compliance and supervisory systems. A proposed interpretive material clarified that the signatories to the certification would incur no additional liability as a consequence of the certification, provided there was a reasonable basis to certify at the time of execution. The previous proposal differed from the current proposal in that it would have required, among other things, that the CCO and CEO have a reasonable basis to certify that a member was in compliance with all applicable laws, rules and regulations at a fixed moment in time. By contrast, the current proposal requires certification to having processes in place to establish, maintain, review, modify and test policies and procedures reasonably designed to achieve compliance with those laws, rules and regulations.

NASD received 166 comments to the proposal, including submissions on behalf of members from 65 CCOs and 34 CEOs, as well as nine comments from various trade organizations. The overwhelming majority of commenters disfavored the proposal. Only six commenters favored the proposal.

Broadly, commenters questioned the value of the proposal, whether it was duplicative of existing requirements, the scope of the certification, and the potential liability of the signatories. CCOs expressed concern that the proposal could lead to retaliation by CEOs if a CCO refused to certify. Additionally, questions arose as to whether the goal of better compliance could be achieved only at the expense of increased potential liability on the part of members. Commenters also noted that the dynamic nature of compliance and the need to allocate finite compliance resources on a risk assessment basis did not lend itself to a certification of compliance certainty at any fixed moment. Commenters further expressed concern that the proposal would spawn baseless litigation by opportunistic plaintiffs' attorneys. Small firms also commented that the cost of compliance would outweigh the benefits for their firms and would divert resources from more substantive compliance matters.

NASD disagrees with a number of the comments, including that the previous proposal duplicated existing requirements and added no value to the quality of compliance. On the contrary, both the previous and present proposals would place focus on the obligations of the compliance function in an unprecedented manner by giving an elevated voice to compliance personnel and forcing regular and productive interaction with the CCO by the CEO. NASD also disagrees that the proposal would have created new liability on CEOs and CCOs who otherwise have no supervisory responsibility—a fact expressly stated in the previously proposed interpretive material. Moreover, NASD does not believe the possibility of meritless litigation should dictate its regulatory actions—abusive litigation should be dealt with by sanctions, not abandoned policy.

Nonetheless, NASD agrees with many of the commenters' other concerns. In particular, NASD recognizes the difficulty in certifying to absolute compliance at any given moment in the face of dynamic regulatory and business environments. At the same time, NASD is committed to the initial proposal's intent: to promote investor protection through improved compliance and supervisory systems and the promotion of regular and meaningful interaction between senior management and compliance personnel. Thus, NASD now is submitting to the Commission a modified proposal that takes a different approach to the issue, one that NASD believes more efficiently and pragmatically achieves the same goal of enhanced compliance. In addition, NASD believes the new proposal effectively focuses senior management attention on compliance matters in a way that allays CCO concerns about incurring additional personal liability and fear of retaliation.

III. Date of Effectiveness of the Proposed Rule Change and Timing for Commission Action

Within 35 days of the date of publication of this notice in the **Federal Register** or within such longer period (i) as the Commission may designate up to 90 days of such date if it finds such longer period to be appropriate and publishes its reasons for so finding or (ii) as to which the self-regulatory organization consents, the Commission will:

(A) by order approve such proposed rule change, or

(B) institute proceedings to determine whether the proposed rule change should be disapproved.

IV. Solicitation of Comments

Interested persons are invited to submit written data, views, and arguments concerning the foregoing, including whether the proposed rule change is consistent with the Act. Persons making written submissions should file six copies thereof with the Secretary, Securities and Exchange Commission, 450 Fifth Street, NW, Washington, DC 20549–0609. Comments may also be submitted electronically at the following e-mail address: *rule-comments@sec.gov.* All comment letters should refer to File No. SR–NASD–2003–176. This file number should be included on the subject line if e-mail is used. To help the Commission process and review comments more efficiently, comments should be sent in hardcopy or by e-mail but not by both methods. Copies of the submission, all subsequent amendments, all written statements with respect to the proposed rule change that are filed with the Commission, and all written communications relating to the proposed rule change between the Commission and any person, other than those that may be withheld from the public in accordance with the provisions of 5 U.S.C. 552, will be available for inspection and copying in the Commission's Public Reference Room. Copies of such filing will also be available for inspection and copying at the principal office of the NASD. All submissions should refer to File No. SR–NASD–2003–176 and should be submitted by January 21, 2004.

For the Commission, by the Division of Market Regulation, pursuant to delegated authority.[6]

Jill M. Peterson,

Assistant Secretary.

[FR Doc. 03–32131 Filed 12–30–03; 8:45 am]

BILLING CODE 8010–01–P

[6] 17 CFR 200.30–3(a)(12).

DEPARTMENT OF STATE

[Public Notice 4578]

Culturally Significant Objects Imported for Exhibition Determinations: ''From Fra Angelico to Bonnard: Masterpieces from the Rau Collection''

AGENCY: Department of State.

ACTION: Notice.

SUMMARY: Notice is hereby given of the following determinations: Pursuant to the authority vested in me by the Act of October 19, 1965 (79 Stat. 985; 22 U.S.C. 2459), Executive Order 12047 of March 27, 1978, the Foreign Affairs Reform and Restructuring Act of 1998 (112 Stat. 2681, *et seq.*; 22 U.S.C. 6501 note, *et seq.*), Delegation of Authority No. 234 of October 1, 1999, Delegation of Authority No. 236 of October 19, 1999, as amended, and Delegation of Authority No. 257 of April 15, 2003 [68 FR 19875], I hereby determine that the objects to be included in the exhibition ''From Fra Angelico to Bonnard: Masterpieces from the Rau Collection,'' imported from

abroad for temporary exhibition within the United States, are of cultural significance. The objects are imported pursuant to loan agreements with the foreign owners. I also determine that the exhibition or display of the exhibit objects at the Portland Art Museum, from on or about January 24, 2004 until on or about September 5, 2004, and at possible additional venues yet to be determined, is in the national interest. Public Notice of these Determinations is ordered to be published in the **Federal Register**.

FOR FURTHER INFORMATION CONTACT: For further information, including a list of the exhibit objects, contact Damir Arnaut, the Office of the Legal Adviser, U.S. Department of State, (telephone: 202/619–6982). The address is U.S. Department of State, SA–44, 301 4th Street, SW., Room 700, Washington, DC 20547–0001.

Dated: December 23, 2003.

C. Miller Crouch,

Principal Deputy Assistant Secretary for Educational and Cultural Affairs, Department of State.

[FR Doc. 03–32193 Filed 12–30–03; 8:45 am]

BILLING CODE 4710–08–P

DEPARTMENT OF TRANSPORTATION

Federal Aviation Administration

[Summary Notice No. PE–2003–79]

Petitions for Exemption; Summary of Petitions Received; Dispositions of Petitions Issued

AGENCY: Federal Aviation Administration (FAA), DOT.

ACTION: Notice of dispositions of prior petitions.

SUMMARY: Pursuant to FAA's rulemaking provisions governing the application, processing, and disposition of petitions for exemption part 11 of Title 14, Code of Federal Regulations (14 CFR), this notice contains a summary of certain dispositions of certain petitions previously received. The purpose of this notice is to improve the public's awareness of, and participation in, this aspect of FAA's regulatory activities.

FOR FURTHER INFORMATION CONTACT: Tim Adams (202) 267–8033, or Sandy Buchanan-Sumter (202) 267–7271, Office of Rulemaking (ARM–1), Federal Aviation Administration, 800 Independence Avenue, SW., Washington, DC 20591.

This notice is published pursuant to 14 CFR 11.85 and 11.91.

Issued in Washington, DC, on December 23, 2003.

Donald P. Byrne,

Assistant Chief Counsel for Regulations.

Dispositions of Petitions

Docket No.: FAA–2002–13273.
Petitioner: Stuart Air Show.
Section of 14 CFR Affected: 14 CFR 135.251, 135.255, and 135.353, and appendices I and J to part 121.
Description of Relief Sought/Disposition: To permit the Visiting Nurse Association to conduct local sightseeing flights at the Martin County Airport, Stuart, Florida, for the Stuart Air Show on November 8 and 9, 2003, for compensation or hire, without complying with certain any-drug and alcohol misuse prevention requirements of part 135.
Grant, 10/23/2003, Exemption No. 8159

Docket No.: FAA–2003–16344.
Petitioner: Sky Care.
Section of 14 CFR Affected: 14 CFR 135.143(c)(2).
Description of Relief Sought/Disposition: To permit Sky Care to operate certain aircraft under part 135 without a TSP–C112 (Mode S) transponder installed in those aircraft.
Grant, 10/31/2003, Exemption No. 8165

Docket No.: FAA–2001–11025.
Petitioner: Miller Aviation.
Section of 14 CFR Affected: 14 CFR 135.143(c)(2).
Description of Relief Sought/Disposition: To permit Miller Aviation to operate certain aircraft under part 135 without a TSP–C112 (Mode S) transponder installed in those aircraft.
Grant, 10/31/2003, Exemption No. 7663A

Docket No.: FAA–2002–12354.
Petitioner: Keystone Helicopter Corporation.
Section of 14 CFR Affected: 14 CFR 135.143(c)(2).
Description of Relief Sought/Disposition: To permit Keystone Helicopter Corporation to operate certain aircraft under part 135 without a TSO–C112 (Mode S) transponder installed in those aircraft.
Grant, 10/31/2003, Exemption No. 7783A

Docket No.: FAA–2002–11493.
Petitioner: Central Copters, Inc.
Section of 14 CFR Affected: 14 CFR 135.143(c)(2).
Description of Relief Sought/Disposition: To permit Central Copters, Inc., to operate certain aircraft under part 135 without a TSO–C112 (Mode S) transponder installed in those aircraft.
Grant, 10/31/2003, Exemption No. 7724A

Docket No.: FAA–2003–16276.
Petitioner: Federal Express Corporation.
Section of 14 CFR Affected: 14 CFR 121.583(a).
Description of Relief Sought/Disposition: To permit Federal Express Corporation to transport medical personnel assigned to Project Orbis without complying with all the passenger-carrying requirements in §§ 121.291, 121.309(f), 121.310, and 121.391.
Grant, 11/3/2003, Exemption No. 5129F

Docket No.: FAA–2001–10799.
Petitioner: Garrett Aviation Services.
Section of 14 CFR Affected: 14 CFR 145.45(f).
Description of Relief Sought/Disposition: To permit Garrett Aviation Services to place an maintain its inspection procedures manual (IPM) in strategically located areas throughout its facility rather than give a copy of the IPM to each of its supervisory and inspection personnel.
Grant, 11/3/2003, Exemption No. 7089B

Docket No.: FAA–2003–15045.
Petitioner: T.B.M., Inc.
Section of 14 CFR Affected: 14 CFR 36.1581(d).
Description of Relief Sought/Disposition: To permit T.B.M., Inc. to operate its Douglas DC–6 and Douglas DC–7 aircraft in aerial fire suppression operations at landing weights greater than the maximum landing weight.
Grant, 11/3/2003, Exemption No. 2745C

Docket No.: FAA–2003–15716.
Petitioner: Triad International Maintenance Corporation.
Section of 14 CFR Affected: 14 CFR 145.45(f).
Description of Relief Sought/Disposition: To permit Triad International Maintenance Corporation to place and maintain its inspection procedures manual (IPM) in its hangar library and inspection office rather than give a copy to each of its supervisory and inspection personnel.
Grant, 11/4/2003, Exemption No. 8166

Docket No.: FAA–2003–16199.
Petitioner: Pacific Airways, Inc.
Section of 14 CFR Affected: 14 CFR 135.203(a)(1).
Description of Relief Sought/Disposition: To permit Pacific Airways, Inc., to conduct operations under visual flight rules outside controlled airspace, over water, at an altitude below 500 feet above the surface.
Grant, 11/4/2003, Exemption No. 8167

Docket No.: FAA–2002–11499.
Petitioner: Mr. Randy L. Bailey.
Section of 14 CFR Affected: 14 CFR 91.109(a) and (b)(3).
Description of Relief Sought/ Disposition: To permit Mr. Randy L. Bailey to conduct certain flight instruction and simulated instrument flights to meet the recent experience requirements in Beechcraft Bonanza, and Travel Air airplanes equipped with a functioning throwover control wheel in place of functioning dual controls.
Grant, 11/4/2003, Exemption No. 7734A

Docket No.: FAA–2001–9772.
Petitioner: Leading Edge Aviation Services, Inc.
Section of 14 CFR Affected: 14 CFR 135.143(c)(2).
Description of Relief Sought/ Disposition: To permit Leading Edge Aviation Services, Inc., to operate certain aircraft under part 135 without a TSO–112C (Mode S) transponder installed in those aircraft.
Grant, 11/5/2003, Exemption No. 8168

Docket No.: FAA–2003–16412.
Petitioner: Richland Aviation.
Section of 14 CFR Affected: 14 CFR 135.143(c)(2).
Description of Relief Sought/ Disposition: To permit Richland Aviation to operate certain aircraft under part 135 without a TSO–112C (Mode S) transponder installed in those aircraft.
Grant, 11/7/2003, Exemption No. 8169

Docket No.: FAA–2001–10793.
Petitioner: Taconite Aviation, Inc.
Section of 14 CFR Affected: 14 CFR 135.145(c)(2).
Description of Relief Sought/ Disposition: To permit Taconite Aviation, Inc., to operate certain aircraft under part 135 without a TSO–112C (Mode S) transponder installed in those aircraft.
Grant, 11/7/2003, Exemption No. 6735C

Docket No.: FAA–2001–10605.
Petitioner: United Air Lines, Inc.
Section of 14 CFR Affected: 14 CFR 121.440(a) and SFAR 58, paragraph 6(b)(3)(ii)(A).
Description of Relief Sought/ Disposition: To permit United Air Lines, Inc., to meet line check requirements using an alternative line check program.
Grant, 11/7/2003, Exemption No. 3451N

Docket No.: FAA–2002–12573.
Petitioner: Regional Aviation Partners.
Section of 14 CFR Affected: 14 CFR 119.21(a)(1).
Description of Relief Sought/ Disposition: To permit members of Regional Aviation Partners, that are direct air carriers conducting domestic operations, in accordance with § 119.3 with airplanes having a passenger seat configuration of more than 9 and less than 31 seats, excluding and crewmember seat, required to conduct operations under part 121 to instead conduct operations under part 135.
Denial, 11/10/2003, Exemption No. 8170

Docket No.: FAA–2001–10919.
Petitioner: Gulfstream Aerospace Corporation.
Section of 14 CFR Affected: 14 CFR 145.45(f).
Description of Relief Sought/ Disposition: To permit Gulfstream Aerospace Corporation to give copies of its Inspection Procedures Manual (IPM) to individuals as necessary and make the manual available electronically to all other employees, rather than give a paper copy of the IPM to each of its supervisory and inspection personnel.
Grant, 11/20/2003, Exemption No. 7706A

Docket No.: FAA–2001–10452.
Petitioner: Air Logistics, LLC.
Section of 14 CFR Affected: 14 CFR 145.45(f).
Description of Relief Sought/ Disposition: To permit Air Logistics, LLC, to place and maintain its inspection procedures manual (IPM) in a number of fixed locations within the facility, in lieu of giving a copy of its IPM to each of its supervisory and inspection personnel.
Grant, 11/20/2003, Exemption No. 7097B

Docket No.: FAA–2001–9783.
Petitioner: Lider Signature S.A.
Section of 14 CFR Affected: 14 CFR 145.47(b).
Description of Relief Sought/ Disposition: To permit Lider Signature S.A., to substitute the calibration standards of the Instituto Nacional de Metrologia, Normalizacao e Qualidade Industrial, Brazil's national standards organization, for the calibration standards of the U.S. National Institute of Standards and Technology, for testing of its inspection and test equipment.
Grant, 11/19/2003, Exemption No. 8177

Docket No.: FAA–2001–10676.
Petitioner: Air Transport Association.
Section of 14 CFR Affected: Appendix H to part 121.
Description of Relief Sought/ Disposition: To permit member airlines of the Air Transport Association to use level C simulators for pilot-in-command initial and upgrade training and checking.
Grant, 11/20/2003, Exemption No. 5400F

Docket No.: FAA–2001–10800.
Petitioner: Sierra industries, Inc.
Section of 14 CFR Affected: 14 CFR 91.9(a) and 91.531(a)(1) and (2).
Description of Relief Sought/ Disposition: To permit certain qualified pilots of its Cessna Citation Model 500 series airplanes equipped with supplemental type certificate (STC) No. SA8176SW or STC No. SA09377SC and either STC No. SA2172NM or STC No. SA645NW to operate those aircraft without a pilot who is designated as second in command.
Grant, 11/20/2003, Exemption No. 5517G

Docket No.: FAA–2003–16399.
Petitioner: New World Aviation, Inc.
Section of 14 CFR Affected: 14 CFR 135.152(a).
Description of Relief Sought/ Disposition: To permit New World Aviation to operate Business Aircraft Group's 1969 Gulfstream Aerospace G–1159 aircraft under part 135 without the aircraft being equipped with an approved digital flight data recorder.
Denial, 11/24/2003, Exemption No. 8181

Docket No.: FAA–2000–8533.
Petitioner: Israel Aircraft Industries, Ltd.
Section of 14 CFR Affected: 14 CFR 61.77(a).
Description of Relief Sought/ Disposition: To permit pilots employed by, or under contract to, Israel Aircraft Industries, Ltd., to operate any U.S.-registered airplane, for which they are licensed by the Israeli CAA, to the United States from Israel, ferry and deliver U.S.-registered airplanes from Israel to other countries for its customers, and perform test and acceptance flights on U.S.-registered airplanes to its customers.
Denial, 11/24/2003, Exemption No. 8180

Docket No: FAA–2003–14819.
Petitioner: AiRadio Corporation, d.b.a. ElectroSonics.
Section of 14 CFR Affected: 14 CFR 145.57(a) and 145.09(d)(3) and (4).
Description of Relief Sought/ Disposition: To permit AiRadio Corporation, d.b.a. ElectroSonics (ElectroSonics) to use manufacturer's service manuals, instructions, and service bulletins provided by the aircraft owners or operators rather than maintain current copies of these documents at the repair station for each aircraft ElectroSonics may repair or alter.
Denial, 10/27/2003, Exemption No. 8161

Docket No.: FAA–2003–15792.
Petitioner: Northwest Airlines, Inc.

Section of 14 CFR Affected: 14 CFR 121.505(b).

Description of Relief Sought/ Disposition: To permit pilots operating a single Northwest Airlines, Inc., airplane to be on duty for more than 16 hours during 24 consecutive hours.

Denial, 12/1/2003, Exemption No. 8182

Docket No: FAA–2001–9353.

Petitioner: Promech, Inc.

Section of 14 CFR Affected: 14 CFR 135.203(a)(1).

Description of Relief Sought/ Disposition: To permit certain certificate holders conducting operations under part 135 to operate seaplanes inside the Ketchikan, Alaska, Class E airspace under Special Visual Flight Rules below 500 feet above surface.

Grant, 11/24/2003, Exemption No. 4760J

Docket No.: FAA–2001–9142.

Petitioner: Honeywell International, Inc., Systems, and Services.

Section of 14 CFR Affected: 14 CFR 21.325(b)(3).

Description of Relief Sought/ Disposition: To permit Honeywell International, Inc., Systems, and Services (Honeywell ES&S) to issue export airworthiness approval tags for class II and class III products manufactured at Honeywell's Singapore facility, which is an approved supplier to Honeywell ES&S under parts manufactured approval No. PQ1222NM.

Grant, 11/17/2003, Exemption No. 7075C

Docket No.: FAA–2001–10475.

Petitioner: Air Transport Association of America.

Section of 14 CFR Affected: 14 CFR 45.11(a) and (d), 91.417(d), and paragraph (d) of appendix B to part 43.

Description of Relief Sought/ Disposition: To permit aircraft to be operated without complying with the requirements pertaining to (1) the location of the aircraft identification plates and (2) the carriage of FAA Form 337 as evidence of installation approval for fuel tank installation in the passenger compartment or a baggage compartment.

Grant, 11/10/2003, Exemption No. 4902I

Docket No.: FAA–2003–16576.

Petitioner: Martinair, Inc.

Section of 14 CFR Affected: 14 CFR 135.143(c)(2).

Description of Relief Sought/ Disposition: To permit Martinair, Inc., to operate certain aircraft under part 135 without a TSO–112C (Mode S) transponder installed in those aircraft.

Grant, 12/4/2003, Exemption No. 8186

Docket No.: FAA–2001–11050.

Petitioner: Big Sky Transportation Company d.b.a. Big Sky Airlines.

Section of 14 CFR Affected: 14 CFR 121.345(c)(2).

Description of Relief Sought/ Disposition: To permit Big Sky Transportation Company d.b.a. Big Sky Airlines to operate certain aircraft under part 121 without a TSO–112C (Mode S) transponder installed in those aircraft.

Grant, 12/4/2003, Exemption No. 7685A

Docket No.: FAA–2003–16561.

Petitioner: Alaska Coastal Airlines, Inc., d.b.a. Wings Airways.

Section of 14 CFR Affected: 14 CFR 135.203(a)(1).

Description of Relief Sought/ Disposition: To permit Alaska Coastal Airlines, Inc., d.b.a. Wings Airways to conduct operations under visual flight rules outside controlled airspace, over water, at an altitude below 500 feet above the surface.

Grant, 12/2/2003, Exemption No. 8185

Docket No.: FAA–2001–10384.

Petitioner: Weary Warriors Squadron, Inc.

Section of 14 CFR Affected: 14 CFR 91.315, 119.5(g), and 119.21(a).

Description of Relief Sought/ Disposition: To permit Weary Warriors Squadron, Inc., to operate its North American B–25 for the purpose of carrying passengers for compensation or hire on local flights for educational and historical purposes.

Grant, 12/2/2003, Exemption No. 6786D

Docket No.: FAA–2003–16518.

Petitioner: Helicopter Association International.

Section of 14 CFR Affected: 14 CFR 61.197(b)(2).

Description of Relief Sought/ Disposition: To permit certificated flight instructors who renewed their certificates at the Helicopter Association International's HELI–EXPO in February 2002, and whose certificates are due to expire on February 29, 2004, and extension period to March 31, 2004.

Denial, 12/2/2003, Exemption No. 8184

Docket No.: FAA–2002–11491.

Petitioner: Cessna Aircraft Company.

Section of 14 CFR Affected: 14 CFR 91.9(a) and 91.531(a)(1) and (2).

Description of Relief Sought/ Disposition: To permit the Cessna Aircraft Company to allow certain qualified pilots of Cessna Citation Model 550, S550, 552, or 560 aircraft to operate those aircraft without a pilot who is designated as second in command.

Grant, 12/2/2003, Exemption No. 4050M

[FR Doc. 03–32084 Filed 12–30–03; 8:45 am]

BILLING CODE 4910–13–P

DEPARTMENT OF TRANSPORTATION

Federal Aviation Administration

Notice of Intent To Rule on Application 04–05–C–00–BUF To Impose and Use the Revenue From a Passenger Facility Charge (PFC) at Buffalo Niagara International Airport, Buffalo, New York

AGENCY: Federal Aviation Administration (FAA), DOT.

ACTION: Notice of intent to rule on application.

SUMMARY: The FAA proposes to rule and invites public comment on the application to impose and use the revenue from a PFC at Buffalo Niagara International Airport under the provisions of the 49 U.S.C. 40117 and part 158 of the Federal Aviation Regulations (14 CFR part 158).

DATES: Comments must be received on or before January 30, 2004.

ADDRESSES: Comments on this application may be mailed or delivered in triplicate to the FAA at the following address: New York Airports District Office, 600 Old Country Road, Suite 446, Garden City, New York, 11530.

In addition, one copy of any comments submitted to the FAA must be mailed or delivered to Lawrence M. Meckler, Executive Director of the Niagara Frontier Transportation Authority at the following address: 181 Ellicott Street, Buffalo, New York 14203.

Air carriers and foreign air carriers may submit copies of written comments previously provided to the Niagara Frontier Transportation Authority under § 158.23 of part 158.

FOR FURTHER INFORMATION CONTACT: Philip Brito, Manager, New York Airports District Office, 600 Old Country Road, Suite 446, Garden City, New York, 11530, (516) 227–3800. The application may be reviewed in person at this same location.

SUPPLEMENTARY INFORMATION: The FAA proposes to rule and invites public comment on the application to impose and use the revenue from a PFC at Buffalo Niagara International Airport under the provisions of the 49 U.S.C. 40117 and part 158 of the Federal Aviation Regulations (14 CFR part 158).

On December 16, 2003, the FAA determined that the application to impose and use the revenue from a PFC

submitted by Niagara Frontier Transportation Authority was substantially complete within the requirements of § 158.25 of part 158. The FAA will approve or disapprove the application, in whole or in part, no later than February 25, 2004.

The following is a brief overview of the application.

Proposed charge effective date: May 1, 2009.

Proposed charge expiration date: April 1, 2010.

Level of the proposed PFC: $3.00.

Total estimated PFC revenue: $7,045,262.

Brief description of proposed project(s):

1. Design and Construction, Extension of Runway 14/32;
2. Design and Construction, Extension, Widening and Rehabilitation of Taxiway D;
3. Design and Construction, Extension and Rehabilitation of Runway 5/23;
4. Design and construction, Extension and Rehabilitation of Taxiway A;
5. Design and Construction, Overhead Canopies for Pedestrian Walkways.

Class or classes of air carriers which the public agency has requested not be required to collect PFCs: Air Taxi/Commercial Operators (ATCO) filing FAA Form 1800–31.

Any person may inspect the application in person at the FAA office listed above under **FOR FURTHER INFORMATION CONTACT** and at the FAA regional Airports office located at: Federal Aviation Administration, Airports Division, 1 Aviation Plaza, Jamaica, New York 11434–4809.

In addition, any person may, upon request, inspect the application, notice and other documents germane to the application in person at the Niagara Frontier Transportation Authority.

Issued in Garden City, New York on December 16, 2003.

Philip Brito,

Manager, New York Airports District Office, Eastern Region.

[FR Doc. 03–32090 Filed 12–30–03; 8:45 am]

BILLING CODE 4910–13–M

DEPARTMENT OF TRANSPORTATION

Federal Aviation Administration

Notice of Intent To Rule on Application 04–07–C–00–EYW To Impose and Use the Revenue From a Passenger Facility Charge (PFC) at Key West International Airport, Key West, FL

AGENCY: Federal Aviation Administration (FAA), DOT.

ACTION: Notice of intent to rule on application.

SUMMARY: The FAA proposes to rule and invites public comment on the application to impose and use the revenue from a PFC at Key West International and use the revenue from a PFC at Florida Keys Marathon Airports under the provisions of the 49 U.S.C. 40117 and part 158 of the Federal Aviation Regulations (14 CFR part 158).

DATES: Comments must be received on or before January 30, 2004.

ADDRESSES: Comments on this application may be mailed or delivered in triplicate to the FAA at the following address: Orlando Airports District Office, Suite 400, 5950 Hazeltine National Drive, Orlando, FL 32822.

In addition, one copy of any comments submitted to the FAA must be mailed or delivered to Mr. Peter Horton, Director of Airports of the Monroe County Board of County Commissioners at the following address: Key West International Airport, 3491 S. Roosevelt Boulevard, Key West, Florida 33040.

Air carriers and foreign air carriers may submit copies of written comments previously provided to the Monroe County Board of County Commissioners under § 158.23 of part 158.

FOR FURTHER INFORMATION CONTACT: Ms. Susan Moore, Program Manager, Orlando Airports District Office, Suite 400, 5950 Hazeltine National Drive, Orlando, FL 32822, (407) 812–6331.

The application may be reviewed in person at this same location.

SUPPLEMENTARY INFORMATION: The FAA proposes to rule and invites public comment on the application to impose and use the revenue from a PFC Key West International and Florida Keys Marathon Airports under the provisions of the 49 U.S.C. 40117 and part 158 of the Federal Aviation Regulations (14 CFR part 158).

On December 18, 2003, the FAA determined that the application to impose and use the revenue from a PFC submitted by Monroe County Board of County Commissioners was substantially complete within the requirements of section 158.25 of part 158. The FAA will approve or disapprove the applications, in whole or in part, no later than April 1, 2004.

The following is a brief overview of the application.

Proposed charge effective date: May 1, 2004.

Proposed charge expiration date: January 1, 2006.

Level of the proposed PFC: $4.50.

Total estimated PFC revenue: $1,437,200.

Brief description of proposed project(s): PFC Application and Administration, THangar Taxiways and Apron, New Terminal Development, Noise Improvement Program Design and Construction—Phase 3 (50 Homes), Noise Contour Update #4, Runway Safety Area Environmental Impact Study Design and Construction—Phase 1, Runway 9/27 Drainage Construction, Aprons Sealcoat Design, Rehabilitate Airport Beacon and Tower, Disadvantage Business Enterprise Program Implementation, Ground Vehicle Operations Video Training Equipment and Cargo Apron Rehabilitation (at Florida Keys Marathon). Class or classes of air carriers which the public agency has requested not be required to collect PFCs: ATCO filing FAA Form 1800–31 and CAC filing Form 298C T1 or E1.

Any person may inspect the application in person at the FAA office listed above under **FOR FURTHER INFORMATION CONTACT** and at the FAA regional Airports office located at: Southern Region Headquarters, 1701 Columbia Avenue, College Park, Georgia 30337.

In addition, any person may, upon request, inspect the application, notice and other documents germane to the application in person at the Monroe County Board of County Commissioners.

Issued in Orlando, Florida, Airports District Office on December 19, 2003.

W. Dean Stringer,

Manager, Orlando Airports District Office, Southern Region.

[FR Doc. 03–32091 Filed 12–30–03; 8:45 am]

BILLING CODE 4910–13–M

DEPARTMENT OF TRANSPORTATION

Federal Aviation Administration

Notice of Intent To Rule on Applications 03–04–C–00–SGF To Impose and Use the Revenue From a Passenger Facility Charge (PFC) at Springfield-Branson Regional Airport, Springfield, MO

AGENCY: Federal Aviation Administration, (FAA), DOT.

ACTION: Notice of intent to rule on application.

SUMMARY: The FAA proposes to rule and invites public comment on the application to impose and use the revenue from a PFC at Springfield-Branson Regional Airport under the provisions of the Aviation Safety and Capacity Expansion Act of 1990 (Title IX of the Omnibus Budget

Reconciliation Act of 1990) (Pub. L. 101–508) and part 158 of the Federal Aviation Regulations (14 CFR part 158).

DATES: Comments must be received on or before January 30, 2004.

ADDRESSES: Comments on this application may be mailed or delivered in tripilicate to the FAA at the following address: Federal Aviation Administration, Central Region, Airports Division, 901 Locust Street, Kansas City, MO 64106.

In addition, one copy of any comments submitted to the FAA must be mailed or delivered to Mr. Robert D. Hancik, A.A.E., Director of Aviation, at the following address: Springfield-Branson Regional Airport, 5000 West Kearney, Suite 15, Springfield, Missouri 65803.

Air carriers and foreign air carriers may submit copies of written comments previously provided to the City of Springfield, Springfield-Branson Regional Airport, under section 158.23 of Part 158.

FOR FURTHER INFORMATION CONTACT: Lorna Sandridge, PFC Program Manager, FAA, Central Region, 901 Locust Street, Kansas City, MO 64106, (816) 329–2641. The application may be reviewed in person at this same location.

SUPPLEMENTARY INFORMATION: The FAA proposes to rule and invites public comment on the application to impose and use the revenue from a PFC at the Springfield-Branson Regional Airport under the provisions of the Aviation Safety and Capacity Expansion Act of 1990 (Title IX of the Omnibus Budget Reconciliation Act of 1990) (Pub. L. 101–508) and part 158 of the Federal Aviation Regulations (14 CFR part 158).

On September 12, 2003, the FAA determined that the application to impose and use the revenue from a PFC submitted by the City of Springfield, Missouri, was not substantially complete within the requirements of section 158.25 of Part 158. The City of Springfield submitted supplemental information on December 3, 2003, to complete the application. The FAA will approve or disapprove the supplemental application, in whole or in part, no later than April 1, 2004.

The following is a brief overview of the application.

Level of the proposed PFC: $4.50.

Proposed charge effective date: July, 2004.

Proposed charge expiration date: August, 2005.

Total estimated PFC revenue: $1,847,000.

Brief description of proposed project(s): Design the midfield terminal; purchase and install loading bridges; modify existing loading bridges; and PFC consulting fees.

Any person may inspect the application in person at the FAA office listed above under **FOR FURTHER INFORMATION CONTACT.**

In addition, any person may, upon request, inspect the application, notice and other documents germane to the application in person at the Springfield-Branson Regional Airport.

Issued in Kansas City, Missouri on December 18, 2003.

George A. Hendon,

Manager, Airports Division, Central Region.

[FR Doc. 03–32092 Filed 12–30–03; 8:45 am]

BILLING CODE 4910–13–M

DEPARTMENT OF TRANSPORTATION

Federal Aviation Administration

Geosynchronous Orbit Aeronautical Mobile Satellite Services Aircraft Earth Station Equipment

AGENCY: Federal Aviation Administration, DOT.

ACTION: Notice of availability and requests for public comment.

SUMMARY: This announces the availability of and request comments on a proposed Technical Standard Order (TSO) C–132, Geosynchronous Orbit Aeronautical Mobile Satellite Services Aircraft Earth Station Equipment. The proposed TSO tells manufacturers seeking TSO authorization or letter of design approval what minimum performance standard (MPS) their equipment must first meet to obtain approval and identification with the applicable TSO markings.

DATES: Comments must identify the TSO and arrive by January 30, 2004.

ADDRESSES: Send all comments on the proposed TSO to: Federal Aviation Administration, Aircraft Certification Service, Aircraft Engineering Division, Avionic Systems Branch, Room 815, 800 Independence Avenue, SW., Washington, DC 20591. Attn. Mr. Albert Sayadian, AIR–130. Or, deliver comments to: Federal Aviation Administration, Room 815, 800 Independence Avenue, SW., Washington, DC 20591.

FOR FURTHER INFORMATION CONTACT: Mr. Albert Sayadian, Federal Aviation Administration, Aircraft Certification Service, Aircraft Engineering Division, Avionic Systems Branch, Room 815, 800 Independence Avenue, SW., Washington, DC 20591, Telephone (202) 385–4652, Fax (202) 385–4651. E-mail *albert.sayadian@FAA.GOV.*

SUPPLEMENTARY INFORMATION:

Comments Invited

You may comment on the proposed TSO listed in this notice by sending such written data, views, or arguments to the above listed address. You may also examine comments received on the proposed TSO, before and after the comment closing date, in Room 815, FAA Headquarters Building, 800 Independence Avenue, SW., Washington, DC 20591, weekdays except Federal holidays, between 8:30 a.m. and 4:30 p.m. The Director of the Aircraft Certification Service will consider all communications received by the closing date before issuing the final TSO.

Background

This proposed TSO applies to Aeronautical Mobile Satellite Services (AMSS) Aircraft Earth Station (AES) equipment that provides direct worldwide communications between aircraft subnetworks and ground sub networks via aeronautical mobile satellites and their ground earth stations. Note that the capability of the AMSS includes the support of both data and voice communications between aircraft and ground-based users. To accomplish this task, the MPS contained in the proposed TSO–C132 will assist manufacturers of geosynchronous orbit AMSS AES articles in their compliance with the applicable requirements of RTCA Document Number (RTCA/DO) 210D, Minimum Operational Performance Standards (MOPS) for Geosynchronous Orbit Aeronautical Mobile Satellite Services Avionics, dated April 19, 2000.

How To Get Copies

You may get a copy of the proposed TSO via the Internet at, *http://www.faa.gov/certification/aircraft/TSOA.htm,* or by contacting the person listed in the section titled **FOR FURTHER INFORMATION CONTACT.**

Issued in Washington, DC, on December 19, 2003.

Susan J.M. Cabler,

Assistant Manager, Aircraft Engineering Division, Aircraft Certification Service.

[FR Doc. 03–32089 Filed 12–30–03; 8:45 am]

BILLING CODE 4910–13–M

DEPARTMENT OF TRANSPORTATION

Federal Aviation Administration

TSO–C163, VDL Mode 3 Communications Equipment Operating Within the Frequency Range 117.975 to 137.000 Megahertz (MHz)

AGENCY: Federal Aviation Administration, DOT.

ACTION: Notice of availability and requests for public comment.

SUMMARY: This notice announces the availability of, and request comments, on a proposed Technical Standard order (TSO) for VDL Mode 3 Communications Equipment Operating within the Frequency Range 117.975 to 137.000 Megahertz (MHz). The proposed TSO tells manufacturers seeking TSO authorization or letter of design approval what minimum performance standard (MPS) their VDL Mode 3 Communications Equipment Operating within the Frequency Range 117.975 to 137.000 MHz must first meet to obtain approval and identification with the applicable TSO markings. Note that this proposed VDL Mode 3 TSO is drafted to recognize RTCA document (RTCA/DO)—271A, Minimum Operational Performance Standards (MOPS) for Aircraft VDL Mode 3 Transceiver Operating in the Frequency Range 117.975 to 137.000 Megahertz (MHz).

DATES: Comments must identify the TSO and arrived by February 5, 2004.

ADDRESSES: Send all comments on the proposed TSO to: Federal Aviation Administration, Aircraft Certification Service, Aircraft Engineering Division, Avionic Systems Branch, AIR–130, Room 815, 800 Independence Avenue, SW., Washington, DC 20591. ATTN: Mr. Gregory Frye, AIR–130. Or, you may deliver comments to: Federal Aviation Administration, Room 815, 800 Independence Avenue, SW., Washington, DC 20591.

FOR FURTHER INFORMATION CONTACT: Mr. Gregory Frye, Federal Aviation Administration, Aircraft Certification Service, Aircraft Engineering Division, Avionic Systems Branch, AIR–130, Room 815, 800 Independence Avenue, SW., Washington, DC 20591, Telephone (202) 385–4649, FAX (202) 385–4651. E-mail *gregory.e.frye@FAA.GOV.*

SUPPLEMENTARY INFORMATION:

Comments Invited

You may comment on the proposed TSO listed in this notice by sending such written data, views, or arguments to the above listed address. You may also examine comments received on the proposed TSO, before and after the comment closing date, in Room 815, FAA Headquarters Building, 800 Independence Avenue, SW., Washington, DC 20591, weekdays except Federal holidays, between 8:30 a.m. and 4:30 p.m. The Director of the Aircraft Certification Service will consider all communications received by the closing date before issuing the final TSO.

Background

The steady growth of aviation has brought about the corresponding growth in air/ground communications requirements. Further, the growing diversity of air traffic has resulted in an increasing complex air traffic control environment, which adds to the demand for spectrum efficiency, necessitates the impending relief granted with the usage of this VDL Mode 3 communication enhancement.

The current Very High Frequency (VHF) air/ground communications system lacks the channel capacity for future air traffic integrated voice and data communications demands. Deficiencies in the existing communication system includes:

- Lack of additional channels for voice services.
- Lack of integrated data link capacity.
- Insufficient ability to significantly improve NAS safety and efficiency.
- Increase radio frequency interference susceptibility.
- Outdated equipment and infrastructure.
- System maintenance concerns.

The VDL Mode 3 system is designed to address deficiencies in the current air traffic management system as well as utilizing technological advances in communications equipment design in order to meet future air traffic system voice and data demands.

How To Get Copies

You may get a copy of the proposed TSO from the Internet at *http://av-info.faa.gov/tso/Tsoro/Proposed.htm*, or by contacting the person listed in the section titled **FOR FURTHER INFORMATION CONTACT**. You may inspect the RTCA document at the FAA office listed under **ADDRESSES**. Because RTCA documents are copyrighted and may not be reproduced without the written consent of RTCA, Inc., you may purchase a copy of RTCA/DO–271A from: RTCA Inc., 1828 L Street, NW., Suite 807, Washington, DC 20036.

Issued in Washington, DC, on December 19, 2003.

Susan J.M. Cabler,

Assistant Manager, Aircraft Engineering Division, Aircraft Certification Service.

[FR Doc. 03–32088 Filed 12–30–03; 8:45 am]

BILLING CODE 4910–13–M

DEPARTMENT OF TRANSPORTATION

Federal Highway Administration

Environmental Impact Statement: Chittenden County, Vermont

AGENCY: Federal Highway Administration (FHWA), DOT.

ACTION: Notice of intent.

SUMMARY: The FHWA is issuing this notice to advise the public that a new supplement to a final environmental impact statement will be prepared for a proposed highway project in Chittenden County, Vermont, and that a 1984 supplement to the final environmental impact statement will not be completed.

FOR FURTHER INFORMATION CONTACT: Rob Sikora, Environmental Program Manager, Federal Highway Administration, P.O. Box 568, Montpelier, Vermont 05601. Telephone: 802–828–4433.

SUPPLEMENTARY INFORMATION: The FHWA, in cooperation with the Vermont Agency of Transportation (VTrans) and the City of Burlington, will prepare a supplement to the final Environmental Impact Statement (EIS) on a proposal to construct a new highway known as the Southern Connector/Champlain Parkway in the City of Burlington, Chittenden County, Vermont. The original EIS for the Southern Connector (FHWA–VT–EIS–77–02–F) was approved on July 3, 1979. As described in the 1979 EIS, the proposed improvements provide an undivided four-lane, limited access highway on new location, commencing at the interchange of I–189 with Shelburne Street (U.S. Route 7) and extending westerly and northerly to the intersection of Battery and King Streets in the Burlington Central Business District for a distance of about 2.5 miles.

A portion of the proposed project has been constructed. Preliminary design and right-of-way acquisition for an additional portion has been completed. The remaining segment has been delayed due to the fact that it traverses an EPA Superfund Site.

On August 29, 1984, FHWA issued a Notice of Intent to prepare a Supplemental EIS to address any additional environmental impacts caused by constructing the new

highway in a wetland contaminated by hazardous waste from a coal gasification plant. A draft Supplemental EIS was approved by FHWA on December 6, 1984, and circulated for public and agency review and comment. Resolution of issues could not be reached and therefore a final Supplemental EIS has not been issued.

A Supplemental EIS (FHWA–VT–EIS–77–02–FS) was approved on February 18, 1997, that provided for the construction of a temporary detour around the Superfund Site along a combination of existing streets and new roadway. The detour was intended to allow interim operation of the Southern Connector/Champlain Parkway pending the resolution of issues related to the Superfund Site and completion of the 1984 Supplemental EIS. The temporary detour has not been constructed.

A new Supplemental EIS is being initiated because FHWA, VTrans, and the City of Burlington are now restudying the portion of the Southern Connector/Champlain Parkway between Lakeside Avenue and the intersection of Battery and King Streets to determine if permanently avoiding the Superfund Site would be appropriate. As a result, it is unnecessary to complete the Supplemental EIS initiated in 1984. In addition to impacts associated with avoiding the Superfund Site, the new Supplemental EIS will also evaluate the impacts of reducing the proposed highway to a two-lane facility.

Alternatives under consideration include (1) taking no action; (2) constructing through the Superfund Site on the approved location; and (3) a range of alternatives for permanently voiding the Superfund Site using a combination of existing streets and new location roadways.

Letters describing the proposed action and soliciting comments will be sent to appropriate Federal, State and local agencies, and to private organizations and citizens who have previously expressed or are known to have interest in this proposal. A public hearing will be held in Burlington. Public notice will be given of the time and place of the hearing. The draft Supplemental EIS will be available for public and agency review and comment prior to the public hearing. No formal scoping meeting is planned at this time.

To ensure that a full range of issues related to this proposed action are addressed and all significant issues identified, comments and suggestions are invited from all interested parties. Comments or questions concerning this proposed action and the Supplemental EIS should be directed to FHWA at the address provided above.

(Catalog of Federal Domestic Assistance Program Number 20.205, Highway Planning and Construction. The regulations implementing Executive Order 12372 regarding intergovernmental consultation on Federal programs and activities apply to this program.)

Issued on: December 23, 2003.

Kenneth R. Sikora, Jr.,

Environmental Program Manager, Montpelier, Vermont.

[FR Doc. 03–32159 Filed 12–30–03; 8:45 am]

BILLING CODE 4910–22–M

DEPARTMENT OF TRANSPORTATION

Federal Highway Administration

Federal Transit Administration

Environmental Impact Statement: Denver, Boulder, Broomfield, Adams, Larimer and Weld Counties, Colorado

AGENCY: Federal Highway Administration (FHWA) and Federal Transit Administration (FTA), Department of Transportation (DOT).

ACTION: Notice of intent to prepare an environmental impact statement.

SUMMARY: FHWA and FTA are issuing this notice to advise the public that an environmental impact statement/Section 4(f) Evaluation will be prepared for transportation improvements in the Counties of Denver, Boulder, Broomfield, Adams, Larimer and Weld.

ADDRESSES: Written comments on the project scope should be sent to David Martinez, Resident Engineer, Colorado Department of Transportation, Region 4, 2207 East Highway 402, Loveland, CO 80537, Telephone: (907) 667–4670, extension 5119.

FOR FURTHER INFORMATION CONTACT: Jean Wallace, Operations/Pavement Engineer, FHWA, Colorado Division, 555 Zang Street, Room 250, Lakewood, CO 80228, Telephone: (303) 969–6730, extension 382. John Dow, Community Planner, FTA, 216 16th Street Mall, Suite 650, Denver, CO 80202, Telephone: (303) 844–3243. David Martinez, Resident Engineer, Colorado Department of Transportation, Region 4. 2207 East Highway 402, Loveland, CO 80537, Telephone: (907) 667–4670, extension 5119.

SUPPLEMENTARY INFORMATION:

I. Description of Corridor and Transportation Needs

The FHWA and FTA, in cooperation with the Colorado Department of Transportation (CDOT), will prepare an environmental impact statement (EIS/Section 4(f) Evaluation in accordance with the National Environmental Policy Act (NEPA) for transportation improvements between Denver and Fort Collins, Colorado. Improvements between Denver and Fort Collins are considered necessary to provide for existing and projected travel demand, improve safety, replace aging infrastructure and accommodate multiple modes of transportation. These problems were identified in past studies and long-range transportation plans, including the North Front Range Transportation Alternatives Feasibility Study.

II. Alternatives

Alternatives under consideration include (1) Taking no action; (2) improvements to the existing highway network, particularly interstate 25, but perhaps also US 85 and US 287; (3) transit options including bus and rail technologies; and (4) constructing a highway on a new location. Incorporated into and studied with the various build alternatives will be design variations of grade and alignment, interchange improvements or new interchanges, and transit station and maintenance facility locations.

III. Issues To Be Studied

FHWA and FTA will evaluate social, economic and environmental impacts of the various alternatives. Factors to be evaluated include transportation service including future corridor capacity, transit ridership and costs, community impacts such as land use, right of way needs, noise, neighborhood compatibility and aesthetics and resource impacts including impacts to historic and archaeological resources, air quality, wetlands, water quality and threatened or endangered species.

IV. Scoping

Project scoping will be accomplished through coordination with affected parties, stakeholders, organizations, Federal, State and local agencies; agency scoping meetings; and through public meetings in the project corridor. Meetings will be held as follows(:)

Greeley—February 3, 2004, 4 p.m. to 7 p.m., Greeley Recreation Center, 651 10th Avenue, Greeley, CO.

Tri-Towns Area—February 5, 2004, 4 p.m. to 7 p.m., Southwest Weld County Services Building, 4209 Weld County Rd 24, ½ (one-half mile north of the intersection of I–25 and Colorado Highway 119).

Fort Collins—February 10, 2004, 4 p.m. to 7 p.m., Fort Collins Lincoln Center, 417 W. Magnolia, Fort Collins, CO.

A scoping information packet will be available at these meetings or by contacting CDOT at the address above.

Information on the time and place of the public scoping meetings will also be provided in local newspapers.

To ensure that the full range of issues related to this proposed action are addressed and all significant issues identified, comments and suggestions are invited from all interested parties. Comments or questions concerning this proposed action and the EIS should be directed to the FHWA, FTA or Colorado Department of Transportation at the addresses provided above. Interested individuals, organizations, or agencies may propose the consideration of an additional, specific alternative or the study of a specific environmental effect associated with an alternative.

(Catalog of Federal Domestic Assistance Program Number 20.205, Highway Planning and Construction. The regulations implementing Executive Order 12372 regarding intergovernmental consultation on Federal programs and activities apply to this program.)

Issued on: December 22, 2003.

William C. Jones,

Division Administrator, Colorado Division, Federal Highway Administration, Lakewood, Colorado.

Lee O. Waddleton,

Regional Administrator, Federal Transit Administration, Denver, Colorado.

[FR Doc. 03–31979 Filed 12–30–03; 8:45 am]

BILLING CODE 4910–22–M

DEPARTMENT OF TRANSPORTATION

Federal Motor Carrier Safety Administration

[FMCSA Docket No. FMCSA–2003–16241]

Qualification of Drivers; Exemption Applications; Vision

AGENCY: Federal Motor Carrier Safety Administration (FMCSA), DOT.

ACTION: Notice of final disposition.

SUMMARY: The FMCSA announces its decision to exempt 24 individuals from the vision requirement in the Federal Motor Carrier Safety Regulations (FMCSRs). The exemptions will enable these individuals to qualify as drivers of commercial motor vehicles (CMVs) in interstate commerce without meeting the vision standard prescribed in 49 CFR 391.41(b)(10).

DATES: December 31, 2003.

FOR FURTHER INFORMATION CONTACT: Ms. Sandra Zywokarte, Office of Bus and Truck Standards and Operations, (202) 366–2987, FMCSA, Department of Transportation, 400 Seventh Street, SW., Washington, DC 20590–0001. Office hours are from 7:45 a.m. to 4:15 p.m., e.t., Monday through Friday, except Federal holidays.

SUPPLEMENTARY INFORMATION:

Electronic Access

You may see all the comments online through the Document Management System (DMS) at: *http://dmses.dot.gov*.

Background

On October 30, 2003, the FMCSA published a Notice of its receipt of applications from 24 individuals, and requested comments from the public (68 FR 61857). The 24 individuals petitioned the FMCSA for exemptions from the vision requirement in 49 CFR 391.41(b)(10), which applies to drivers of CMVs in interstate commerce. They are: Ronald G. Austin, William E. Barrett, Eric D. Bennett, Zack Bradford, Sr., Rickey C. Dalton, Dustin G. Davis, John K. DeGolier, Martiano L. Espinosa, Roy M. Field, Derek T. Ford, James G. LaBair, Dennis A. Leschke, Lonnie Lomax, Jr., Ernesto R. Martinez, Bennet G. Maruska, James T. McGinnis, Gary L. Miller, Jack D. Miller, Ezequiel M. Ramirez, Carl W. Skinner, Jr., Doyce J. Soriez, Peter D. Wehner, Howard W. Williams, and Jack E. Wilson.

Under 49 U.S.C. 31315 and 31136(e), the FMCSA may grant an exemption for a 2-year period if it finds ''such exemption would likely achieve a level of safety that is equivalent to, or greater than, the level that would be achieved absent such exemption.'' The statute also allows the agency to renew exemptions at the end of the 2-year period. Accordingly, the FMCSA has evaluated the 24 applications on their merits and made a determination to grant the exemptions to all of them. The comment period closed on December 1, 2003. One comment was received, and its contents were carefully considered by the FMCSA in reaching the final decision to grant the exemptions.

Vision and Driving Experience of the Applicants

The vision requirement in the FMCSRs provides:

A person is physically qualified to drive a commercial motor vehicle if that person has distant visual acuity of at least 20/40 (Snellen) in each eye without corrective lenses or visual acuity separately corrected to 20/40 (Snellen) or better with corrective lenses, distant binocular acuity of at least 20/40 (Snellen) in both eyes with or without corrective lenses, field of vision of at least 70° in the horizontal meridian in each eye, and the ability to recognize the colors of traffic signals and devices showing standard red, green, and amber (49 CFR 391.41(b)(10)).

Since 1992, the agency has undertaken studies to determine if this vision standard should be amended. The final report from our medical panel recommends changing the field of vision standard from 70° to 120°, while leaving the visual acuity standard unchanged. (See Frank C. Berson, M.D., Mark C. Kuperwaser, M.D., Lloyd Paul Aiello, M.D., and James W. Rosenberg, M.D., ''Visual Requirements and Commercial Drivers,'' October 16, 1998, filed in the docket, FHWA–98–4334.) The panel's conclusion supports the agency's view that the present visual acuity standard is reasonable and necessary as a general standard to ensure highway safety. The FMCSA also recognizes that some drivers do not meet the vision standard, but have adapted their driving to accommodate their vision limitation and demonstrated their ability to drive safely.

The 24 applicants fall into this category. They are unable to meet the vision standard in one eye for various reasons, including amblyopia, corneal and retinal scars, and loss of an eye due to trauma. In most cases, their eye conditions were not recently developed. All but 11 of the applicants were either born with their vision impairments or have had them since childhood. The 11 individuals who sustained their vision conditions as adults have had them for periods ranging from 4 to 35 years.

Although each applicant has one eye which does not meet the vision standard in 49 CFR 391.41(b)(10), each has at least 20/40 corrected vision in the other eye, and in a doctor's opinion has sufficient vision to perform all the tasks necessary to operate a CMV. The doctors' opinions are supported by the applicants' possession of valid commercial driver's licenses (CDLs) or non-CDLs to operate CMVs. Before issuing CDLs, States subject drivers to knowledge and performance tests designed to evaluate their qualifications to operate a CMV. All these applicants satisfied the testing standards for their State of residence. By meeting State licensing requirements, the applicants demonstrated their ability to operate a commercial vehicle, with their limited vision, to the satisfaction of the State.

While possessing a valid CDL or non-CDL, these 24 drivers have been authorized to drive a CMV in intrastate commerce, even though their vision disqualifies them from driving in interstate commerce. They have driven CMVs with their limited vision for careers ranging from 4 to 49 years. In the past 3 years, four of the drivers have had

convictions for traffic violations. Three of these convictions were for speeding and one was for ''failure to yield right of way to an emergency vehicle.'' Two drivers were involved in a crash but did not receive a citation.

The qualifications, experience, and medical condition of each applicant were stated and discussed in detail in the October 30, 2003 notice (68 FR 61857). Since there were no docket comments on the specific merits or qualifications of any applicant, we have not repeated the individual profiles here. Our summary analysis of the applicants is supported by the information published at 68 FR 61857.

Basis for Exemption Determination

Under 49 U.S.C. 31315 and 31136(e), the FMCSA may grant an exemption from the vision standard in 49 CFR 391.41(b)(10) if the exemption is likely to achieve an equivalent or greater level of safety than would be achieved without the exemption. Without the exemption, applicants will continue to be restricted to intrastate driving. With the exemption, applicants can drive in interstate commerce. Thus, our analysis focuses on whether an equal or greater level of safety is likely to be achieved by permitting each of these drivers to drive in interstate commerce as opposed to restricting him or her to driving in intrastate commerce.

To evaluate the effect of these exemptions on safety, the FMCSA considered not only the medical reports about the applicants' vision, but also their driving records and experience with the vision deficiency. To qualify for an exemption from the vision standard, the FMCSA requires a person to present verifiable evidence that he or she has driven a commercial vehicle safely with the vision deficiency for 3 years. Recent driving performance is especially important in evaluating future safety, according to several research studies designed to correlate past and future driving performance. Results of these studies support the principle that the best predictor of future performance by a driver is his/her past record of crashes and traffic violations. Copies of the studies have been added to the docket (FHWA–98–3637).

We believe we can properly apply the principle to monocular drivers, because data from a former FMCSA waiver study program clearly demonstrates that the driving performance of experienced monocular drivers in the program is better than that of all CMV drivers collectively. (*See* 61 FR 13338, 13345, March 26, 1996.) The fact that experienced monocular drivers with good driving records in the waiver program demonstrated their ability to drive safely supports a conclusion that other monocular drivers, meeting the same qualifying conditions as those required by the waiver program, are also likely to have adapted to their vision deficiency and will continue to operate safely.

The first major research correlating past and future performance was done in England by Greenwood and Yule in 1920. Subsequent studies, building on that model, concluded that crash rates for the same individual exposed to certain risks for two different time periods vary only slightly. (*See* Bates and Neyman, University of California Publications in Statistics, April 1952.) Other studies demonstrated theories of predicting crash proneness from crash history coupled with other factors. These factors—such as age, sex, geographic location, mileage driven and conviction history—are used every day by insurance companies and motor vehicle bureaus to predict the probability of an individual experiencing future crashes. (*See* Weber, Donald C., Accident Rate Potential: An Application of Multiple Regression Analysis of a Poisson Process,'' Journal of American Statistical Association, June 1971.) A 1964 California Driver Record Study prepared by the California Department of Motor Vehicles concluded that the best overall crash predictor for both concurrent and nonconcurrent events is the number of single convictions. This study used 3 consecutive years of data, comparing the experiences of drivers in the first 2 years with their experiences in the final year.

Applying principles from these studies to the past 3-year record of the 24 applicants receiving an exemption, we note that the applicants have had only two crashes and four traffic violations in the last 3 years. The applicants achieved this record of safety while driving with their vision impairment, demonstrating the likelihood that they have adapted their driving skills to accommodate their condition. As the applicants' ample driving histories with their vision deficiencies are good predictors of future performance, the FMCSA concludes their ability to drive safely can be projected into the future.

We believe the applicants' intrastate driving experience and history provide an adequate basis for predicting their ability to drive safely in interstate commerce. Intrastate driving, like interstate operations, involves substantial driving on highways on the interstate system and on other roads built to interstate standards. Moreover, driving in congested urban areas exposes the driver to more pedestrian and vehicular traffic than exists on interstate highways. Faster reaction to traffic and traffic signals is generally required because distances are more compact. These conditions tax visual capacity and driver response just as intensely as interstate driving conditions. The veteran drivers in this proceeding have operated CMVs safely under those conditions for at least 3 years, most for much longer. Their experience and driving records lead us to believe that each applicant is capable of operating in interstate commerce as safely as he or she has been performing in intrastate commerce. Consequently, the FMCSA finds that exempting these applicants from the vision standard in 49 CFR 391.41(b)(10) is likely to achieve a level of safety equal to that existing without the exemption. For this reason, the agency is granting the exemptions for the 2-year period allowed by 49 U.S.C. 31315 and 31136(e) to the 24 applicants listed in the October notice (68 FR 61857).

We recognize that the vision of an applicant may change and affect his/her ability to operate a commercial vehicle as safely as in the past. As a condition of the exemption, therefore, the FMCSA will impose requirements on the 24 individuals consistent with the grandfathering provisions applied to drivers who participated in the agency's vision waiver program.

Those requirements are found at 49 CFR 391.64(b) and include the following: (1) That each individual be physically examined every year (a) by an ophthalmologist or optometrist who attests that the vision in the better eye continues to meet the standard in 49 CFR 391.41(b)(10), and (b) by a medical examiner who attests that the individual is otherwise physically qualified under 49 CFR 391.41; (2) that each individual provide a copy of the ophthalmologist's or optometrist's report to the medical examiner at the time of the annual medical examination; and (3) that each individual provide a copy of the annual medical certification to the employer for retention in the driver's qualification file, or keep a copy in his/her driver's qualification file if he/she is self-employed. The driver must also have a copy of the certification when driving, for presentation to a duly authorized Federal, State, or local enforcement official.

Discussion of Comments

The FMCSA received one comment in this proceeding. The comment was considered and is discussed below.

Advocates for Highway and Auto Safety (Advocates) expresses continued opposition to the FMCSA's policy to grant exemptions from the FMCSRs, including the driver qualification standards. Specifically, Advocates: (1) Objects to the manner in which the FMCSA presents driver information to the public and makes safety determinations; (2) objects to the agency's reliance on conclusions drawn from the vision waiver program; (3) claims the agency has misinterpreted statutory language on the granting of exemptions (49 U.S.C. 31315 and 31136(e)); and finally (4) suggests that a 1999 Supreme Court decision affects the legal validity of vision exemptions.

The issues raised by Advocates were addressed at length in 64 FR 51568 (September 23, 1999), 64 FR 66962 (November 30, 1999), 64 FR 69586 (December 13, 1999), 65 FR 159 (January 3, 2000), 65 FR 57230 (September 21, 2000), and 66 FR 13825 (March 7, 2001). We will not address these points again here, but refer interested parties to those earlier discussions.

Conclusion

After considering the comments to the docket and based upon its evaluation of the 24 exemption applications, the FMCSA exempts Ronald G. Austin, William E. Barrett, Eric D. Bennett, Zack Bradford, Sr., Rickey C. Dalton, Dustin G. Davis, John K. DeGolier, Martiano L. Espinosa, Roy M. Field, Derek T. Ford, James G. LaBair, Dennis A. Leschke, Lonnie Lomax, Jr., Ernesto R. Martinez, Bennet G. Maruska, James T. McGinnis, Gary L. Miller, Jack D. Miller, Ezequiel M. Ramirez, Carl W. Skinner, Jr., Doyce J. Soriez, Peter D. Wehner, Howard W. Williams, and Jack E. Wilson from the vision requirement in 49 CFR 391.41(b)(10), subject to the following conditions: (1) That each individual be physically examined every year (a) by an ophthalmologist or optometrist who attests that the vision in the better eye continues to meet the standard in 49 CFR 391.41(b)(10), and (b) by a medical examiner who attests that the individual is otherwise physically qualified under 49 CFR 391.41; (2) that each individual provide a copy of the ophthalmologist's or optometrist's report to the medical examiner at the time of the annual medical examination; and (3) that each individual provide a copy of the annual medical certification to the employer for retention in the driver's qualification file, or keep a copy in his/her driver's qualification file if he/she is self-employed. The driver must also have a copy of the certification when driving, so it may be presented to a duly authorized Federal, State, or local enforcement official.

In accordance with 49 U.S.C. 31315 and 31136(e), each exemption will be valid for 2 years unless revoked earlier by the FMCSA. The exemption will be revoked if: (1) The person fails to comply with the terms and conditions of the exemption; (2) the exemption has resulted in a lower level of safety than was maintained before it was granted; or (3) continuation of the exemption would not be consistent with the goals and objectives of 49 U.S.C. 31315 and 31136. If the exemption is still effective at the end of the 2-year period, the person may apply to the FMCSA for a renewal under procedures in effect at that time.

Issued on: December 12, 2003.

Rose A. McMurray,

Associate Administrator, Policy and Program Development.

[FR Doc. 03–32093 Filed 12–30–03; 8:45 am]

BILLING CODE 4910–EX–P

DEPARTMENT OF TRANSPORTATION

Maritime Administration

[MARAD–2003–16753]

Requested Administrative Waiver of the Coastwise Trade Laws

AGENCY: Maritime Administration, Department of Transportation.

ACTION: Invitation for public comments on a requested administrative waiver of the Coastwise Trade Laws for the vessel AMICI.

SUMMARY: As authorized by Pub. L. 105–383 and Pub. L. 107–295, the Secretary of Transportation, as represented by the Maritime Administration (MARAD), is authorized to grant waivers of the U.S.-build requirement of the coastwise laws under certain circumstances. A request for such a waiver has been received by MARAD. The vessel, and a brief description of the proposed service, is listed below. The complete application is given in DOT docket 2003–16753 at *http://dms.dot.gov*. Interested parties may comment on the effect this action may have on U.S. vessel builders or businesses in the U.S. that use U.S.-flag vessels. If MARAD determines, in accordance with Pub. L. 105–383 and MARAD's regulations at 46 CFR part 388 (68 FR 23084; April 30, 2003), that the issuance of the waiver will have an unduly adverse effect on a U.S.-vessel builder or a business that uses U.S.-flag vessels in that business, a waiver will not be granted. Comments should refer to the docket number of this notice and the vessel name in order for MARAD to properly consider the comments. Comments should also state the commenter's interest in the waiver application, and address the waiver criteria given in § 388.4 of MARAD's regulations at 46 CFR part 388.

DATES: Submit comments on or before January 30, 2004.

ADDRESSES: Comments should refer to docket number MARAD–2003–16753. Written comments may be submitted by hand or by mail to the Docket Clerk, U.S. DOT Dockets, Room PL–401, Department of Transportation, 400 7th St., SW., Washington, DC 20590–0001. You may also send comments electronically via the Internet at *http://dmses.dot.gov/submit/*. All comments will become part of this docket and will be available for inspection and copying at the above address between 10 a.m. and 5 p.m., E.T., Monday through Friday, except federal holidays. An electronic version of this document and all documents entered into this docket is available on the World Wide Web at *http://dms.dot.gov*.

FOR FURTHER INFORMATION CONTACT: Michael Hokana, U.S. Department of Transportation, Maritime Administration, MAR–830 Room 7201, 400 Seventh Street, SW., Washington, DC 20590. Telephone 202–366–0760.

SUPPLEMENTARY INFORMATION: As described by the applicant the intended service of the vessel AMICI is:

Intended Use: ''Provide cruises as fundraising activity for non-profit organizations.''

Geographic Region: ''Maine to Florida Keys.''

Dated: December 23, 2003.

By order of the Maritime Administrator.

Joel C. Richard,

Secretary, Maritime Administration.

[FR Doc. 03–32096 Filed 12–30–03; 8:45 am]

BILLING CODE 4910–81–P

DEPARTMENT OF TRANSPORTATION

Maritime Administration

[MARAD–2003–16758]

Requested Administrative Waiver of the Coastwise Trade Laws

AGENCY: Maritime Administration, Department of Transportation.

ACTION: Invitation for public comments on a requested administrative waiver of the Coastwise Trade Laws for the vessel CATTLEYA.

SUMMARY: As authorized by Pub. L. 105–383 and Pub. L. 107–295, the Secretary of Transportation, as represented by the Maritime Administration (MARAD), is authorized to grant waivers of the U.S.-

build requirement of the coastwise laws under certain circumstances. A request for such a waiver has been received by MARAD. The vessel, and a brief description of the proposed service, is listed below. The complete application is given in DOT docket 2003–16758 at *http://dms.dot.gov*. Interested parties may comment on the effect this action may have on U.S. vessel builders or businesses in the U.S. that use U.S.-flag vessels. If MARAD determines, in accordance with Pub. L. 105–383 and MARAD's regulations at 46 CFR part 388 (68 FR 23084; April 30, 2003), that the issuance of the waiver will have an unduly adverse effect on a U.S.-vessel builder or a business that uses U.S.-flag vessels in that business, a waiver will not be granted. Comments should refer to the docket number of this notice and the vessel name in order for MARAD to properly consider the comments. Comments should also state the commenter's interest in the waiver application, and address the waiver criteria given in § 388.4 of MARAD's regulations at 46 CFR part 388.

DATES: Submit comments on or before January 30, 2004.

ADDRESSES: Comments should refer to docket number MARAD–2003–16758. Written comments may be submitted by hand or by mail to the Docket Clerk, U.S. DOT Dockets, Room PL–401, Department of Transportation, 400 7th St. SW., Washington, DC 20590–0001. You may also send comments electronically via the Internet at *http://dmses.dot.gov/submit/*. All comments will become part of this docket and will be available for inspection and copying at the above address between 10 a.m. and 5 p.m., E.T., Monday through Friday, except federal holidays. An electronic version of this document and all documents entered into this docket is available on the World Wide Web at *http://dms.dot.gov*.

FOR FURTHER INFORMATION CONTACT: Michael Hokana, U.S. Department of Transportation, Maritime Administration, MAR–830 Room 7201, 400 Seventh Street SW., Washington, DC 20590. Telephone (202) 366–0760.

SUPPLEMENTARY INFORMATION: As described by the applicant the intended service of the vessel CATTLEYA is:

Intended Use: ''Sailing Charters & sailing Instruction.''

Geographic Region: ''All U.S. waters excluding Alaska, Hawaii, Washington, and Oregon. Primary expected use is in the waters of Florida and Texas.''

Dated: December 23, 2003.

By order of the Maritime Administrator.

Joel C. Richard,

Secretary, Maritime Administration.

[FR Doc. 03–32099 Filed 12–30–03; 8:45 am]

BILLING CODE 4910–81–P

DEPARTMENT OF TRANSPORTATION

Maritime Administration

[MARAD–2003–16751]

Requested Administrative Waiver of the Coastwise Trade Laws

AGENCY: Maritime Administration, Department of Transportation.

ACTION: Invitation for public comments on a requested administrative waiver of the Coastwise Trade Laws for the vessel JUSTUS.

SUMMARY: As authorized by Pub. L. 105–383 and Pub. L. 107–295, the Secretary of Transportation, as represented by the Maritime Administration (MARAD), is authorized to grant waivers of the U.S.-build requirement of the coastwise laws under certain circumstances. A request for such a waiver has been received by MARAD. The vessel, and a brief description of the proposed service, is listed below. The complete application is given in DOT docket 2003–16751 at *http://dms.dot.gov*. Interested parties may comment on the effect this action may have on U.S. vessel builders or businesses in the U.S. that use U.S.-flag vessels. If MARAD determines, in accordance with Pub. L. 105–383 and MARAD's regulations at 46 CFR part 388 (68 FR 23084; April 30, 2003), that the issuance of the waiver will have an unduly adverse effect on a U.S.-vessel builder or a business that uses U.S.-flag vessels in that business, a waiver will not be granted. Comments should refer to the docket number of this notice and the vessel name in order for MARAD to properly consider the comments. Comments should also state the commenter's interest in the waiver application, and address the waiver criteria given in § 388.4 of MARAD's regulations at 46 CFR part 388.

DATES: Submit comments on or before January 30, 2004.

ADDRESSES: Comments should refer to docket number MARAD–2003–16751. Written comments may be submitted by hand or by mail to the Docket Clerk, U.S. DOT Dockets, Room PL–401, Department of Transportation, 400 7th St., SW., Washington, DC 20590–0001. You may also send comments electronically via the Internet at *http://dmses.dot.gov/submit/*. All comments will become part of this docket and will be available for inspection and copying at the above address between 10 a.m. and 5 p.m., E.T., Monday through Friday, except federal holidays. An electronic version of this document and all documents entered into this docket is available on the World Wide Web at *http://dms.dot.gov*.

FOR FURTHER INFORMATION CONTACT: Michael Hokana, U.S. Department of Transportation, Maritime Administration, MAR–830 Room 7201, 400 Seventh Street, SW., Washington, DC 20590. Telephone 202–366–0760.

SUPPLEMENTARY INFORMATION: As described by the applicant the intended service of the vessel JUSTUS is:

Intended Use: ''Tourist day trips around Boston, MA.''

Geographic Region: ''Massachusetts waters.''

Dated: December 23, 2003.

By order of the Maritime Administrator.

Joel C. Richard,

Secretary, Maritime Administration.

[FR Doc. 03–32094 Filed 12–30–03; 8:45 am]

BILLING CODE 4910–81–P

DEPARTMENT OF TRANSPORTATION

Maritime Administration

[MARAD–2003–16755]

Requested Administrative Waiver of the Coastwise Trade Laws

AGENCY: Maritime Administration, Department of Transportation.

ACTION: Invitation for public comments on a requested administrative waiver of the Coastwise Trade Laws for the vessel MEMORY MAKER.

SUMMARY: As authorized by Pub. L. 105–383 and Pub. L. 107–295, the Secretary of Transportation, as represented by the Maritime Administration (MARAD), is authorized to grant waivers of the U.S.-build requirement of the coastwise laws under certain circumstances. A request for such a waiver has been received by MARAD. The vessel, and a brief description of the proposed service, is listed below. The complete application is given in DOT docket 2003–16755 at *http://dms.dot.gov*. Interested parties may comment on the effect this action may have on U.S. vessel builders or businesses in the U.S. that use U.S.-flag vessels. If MARAD determines, in accordance with Pub. L. 105–383 and MARAD's regulations at 46 CFR part 388 (68 FR 23084; April 30, 2003), that the issuance of the waiver will have an unduly adverse effect on a U.S.-vessel builder or a business that uses U.S.-flag vessels in that business, a waiver will

not be granted. Comments should refer to the docket number of this notice and the vessel name in order for MARAD to properly consider the comments. Comments should also state the commenter's interest in the waiver application, and address the waiver criteria given in § 388.4 of MARAD's regulations at 46 CFR part 388.

DATES: Submit comments on or before January 30, 2004.

ADDRESSES: Comments should refer to docket number MARAD–2003–16755. Written comments may be submitted by hand or by mail to the Docket Clerk, U.S. DOT Dockets, Room PL–401, Department of Transportation, 400 7th St., SW., Washington, DC 20590–0001. You may also send comments electronically via the Internet at *http://dmses.dot.gov/submit/*. All comments will become part of this docket and will be available for inspection and copying at the above address between 10 a.m. and 5 p.m., E.T., Monday through Friday, except federal holidays. An electronic version of this document and all documents entered into this docket is available on the World Wide Web at *http://dms.dot.gov*.

FOR FURTHER INFORMATION CONTACT: Michael Hokana, U.S. Department of Transportation, Maritime Administration, MAR–830 Room 7201, 400 Seventh Street, SW., Washington, DC 20590. Telephone 202–366–0760.

SUPPLEMENTARY INFORMATION: As described by the applicant the intended service of the vessel MEMORY MAKER is:

Intended Use: ''Uninspected vessel for 6 passengers or less for hire upon the Great Lakes.''

Geographic Region: ''The Great Lakes of the U.S.''

Dated: December 23, 2003.

By order of the Maritime Administrator.

Joel C. Richard,

Secretary, Maritime Administration.

[FR Doc. 03–32098 Filed 12–30–03; 8:45 am]

BILLING CODE 4910–81–P

DEPARTMENT OF TRANSPORTATION

Maritime Administration

[MARAD–2003–16754]

Requested Administrative Waiver of the Coastwise Trade Laws

AGENCY: Maritime Administration, Department of Transportation.

ACTION: Invitation for public comments on a requested administrative waiver of the Coastwise Trade Laws for the vessel MON AMIE.

SUMMARY: As authorized by Pub. L. 105–383 and Pub. L. 107–295, the Secretary of Transportation, as represented by the Maritime Administration (MARAD), is authorized to grant waivers of the U.S.-build requirement of the coastwise laws under certain circumstances. A request for such a waiver has been received by MARAD. The vessel, and a brief description of the proposed service, is listed below. The complete application is given in DOT docket 2003–16754 at *http://dms.dot.gov*. Interested parties may comment on the effect this action may have on U.S. vessel builders or businesses in the U.S. that use U.S.-flag vessels. If MARAD determines, in accordance with Pub. L. 105–383 and MARAD's regulations at 46 CFR part 388 (68 FR 23084; April 30, 2003), that the issuance of the waiver will have an unduly adverse effect on a U.S.-vessel builder or a business that uses U.S.-flag vessels in that business, a waiver will not be granted. Comments should refer to the docket number of this notice and the vessel name in order for MARAD to properly consider the comments. Comments should also state the commenter's interest in the waiver application, and address the waiver criteria given in § 388.4 of MARAD's regulations at 46 CFR part 388.

DATES: Submit comments on or before January 30, 2004.

ADDRESSES: Comments should refer to docket number MARAD–2003–16754. Written comments may be submitted by hand or by mail to the Docket Clerk, U.S. DOT Dockets, Room PL–401, Department of Transportation, 400 7th St., SW., Washington, DC 20590–0001. You may also send comments electronically via the Internet at *http://dmses.dot.gov/submit/*. All comments will become part of this docket and will be available for inspection and copying at the above address between 10 a.m. and 5 p.m., E.T., Monday through Friday, except federal holidays. An electronic version of this document and all documents entered into this docket is available on the World Wide Web at *http://dms.dot.gov*.

FOR FURTHER INFORMATION CONTACT: Michael Hokana, U.S. Department of Transportation, Maritime Administration, MAR–830 Room 7201, 400 Seventh Street, SW., Washington, DC 20590. Telephone 202–366–0760.

SUPPLEMENTARY INFORMATION: As described by the applicant the intended service of the vessel MON AMIE is:

Intended Use: ''Lessons, charters and tours.''

Geographic Region: ''East Coast of USA.''

Dated: December 23, 2003.

By order of the Maritime Administrator.

Joel C. Richard,

Secretary, Maritime Administration.

[FR Doc. 03–32097 Filed 12–30–03; 8:45 am]

BILLING CODE 4910–81–P

DEPARTMENT OF TRANSPORTATION

Maritime Administration

[MARAD–2003–16752]

Requested Administrative Waiver of the Coastwise Trade Laws

AGENCY: Maritime Administration, Department of Transportation.

ACTION: Invitation for public comments on a requested administrative waiver of the Coastwise Trade Laws for the vessel VERITAS.

SUMMARY: As authorized by Pub. L. 105–383 and Pub. L. 107–295, the Secretary of Transportation, as represented by the Maritime Administration (MARAD), is authorized to grant waivers of the U.S.-build requirement of the coastwise laws under certain circumstances. A request for such a waiver has been received by MARAD. The vessel, and a brief description of the proposed service, is listed below. The complete application is given in DOT docket 2003–16752 at *http://dms.dot.gov*. Interested parties may comment on the effect this action may have on U.S. vessel builders or businesses in the U.S. that use U.S.-flag vessels. If MARAD determines, in accordance with Pub. L. 105–383 and MARAD's regulations at 46 CFR part 388 (68 FR 23084; April 30, 2003), that the issuance of the waiver will have an unduly adverse effect on a U.S.-vessel builder or a business that uses U.S.-flag vessels in that business, a waiver will not be granted. Comments should refer to the docket number of this notice and the vessel name in order for MARAD to properly consider the comments. Comments should also state the commenter's interest in the waiver application, and address the waiver criteria given in § 388.4 of MARAD's regulations at 46 CFR part 388.

DATES: Submit comments on or before January 30, 2004.

ADDRESSES: Comments should refer to docket number MARAD–2003–16752. Written comments may be submitted by hand or by mail to the Docket Clerk, U.S. DOT Dockets, Room PL–401, Department of Transportation, 400 7th St., SW., Washington, DC 20590–0001. You may also send comments electronically via the Internet at *http://dmses.dot.gov/submit/*. All comments will become part of this docket and will

be available for inspection and copying at the above address between 10 a.m. and 5 p.m., E.T., Monday through Friday, except federal holidays. An electronic version of this document and all documents entered into this docket is available on the World Wide Web at *http://dms.dot.gov*.

FOR FURTHER INFORMATION CONTACT: Michael Hokana, U.S. Department of Transportation, Maritime Administration, MAR–830 Room 7201, 400 Seventh Street, SW., Washington, DC 20590. Telephone 202–366–0760.

SUPPLEMENTARY INFORMATION: As described by the applicant the intended service of the vessel VERITAS is:

Intended Use: ''Charter cruises.''

Geographic Region: ''U.S. East Coastal Waters and the Caribbean.''

Dated: December 23, 2003.

By order of the Maritime Administrator.

Joel C. Richard,

Secretary, Maritime Administration.

[FR Doc. 03–32095 Filed 12–30–03; 8:45 am]

BILLING CODE 4910–81–P

DEPARTMENT OF TRANSPORTATION

Research and Special Programs Administration

[Docket No. RSPA–98–4957]

Request for Public Comments and OMB Approval of Existing Information Collection

AGENCY: Research and Special Programs Administration (RSPA), DOT.

SUMMARY: As required by the Paperwork Reduction Act of 1995, the Research and Special Programs Administration, Office of Pipeline Safety published its intention to revise forms RSPA F 7100.1, Incident Report for Gas Distribution Systems, and Form RSPA F 7100.1–1, Annual Report for Gas Distribution Systems, (68 FR 33759, June 5, 2003). Several operators, two trade associations representing natural gas distribution pipeline operators, one state utility commission, and one individual provided comments. The purpose of this additional notice is to provide the public an additional 30 days to comment on the proposed revisions to the natural gas distribution incident and annual reporting forms, including the form instructions.

DATES: Comments on this notice must be received by January 30, 2004, to be assured of consideration.

FOR FURTHER INFORMATION CONTACT: Shauna Turnbull by telephone at (202) 366–3731, by fax at (202) 366–4566, by e-mail at *shauna.turnbull@rspa.dot.gov,* or by mail at the DOT/RSPA Office of Pipeline Safety, DPS–13, 400 Seventh Street, SW., Washington, DC 20590.

ADDRESSES: Copies of the proposed information collection and the revised forms and instructions can be viewed in this docket at *http://dms.dot.gov.* You may also visit the Dockets Facility, U.S. Department of Transportation, Plaza 401, 400 Seventh Street, S.W., Washington, D.C. 20590–0001. Comments should identify the docket number of this notice, RSPA–98–4957, and can be mailed directly to: Office of Information and Regulatory Affairs OIRA), Office of Management and Budget (OMB), 726 Jackson Place, N.W., Washington, D.C. 20503, ATTN: Desk Officer for Department of Transportation (DOT).

SUPPLEMENTARY INFORMATION:

Filing Information

The Dockets facility is open from 10 a.m. to 5 p.m., Monday through Friday, except federal holidays. You should submit an original and one copy of a comment. If you wish to receive confirmation of receipt of your comments, you must include a stamped, self-addressed postcard. To file written comments electronically, after logging onto *http://dms.dot.gov,* click on ''Electronic Submission.'' You can read comments and other material in the docket at: *http://dms.dot.gov.* General information about our pipeline safety program is available at: *http://ops.dot.gov.*

Background

Operators of pipeline systems subject to the Research and Special Programs Administration/Office of Pipeline Safety (RSPA/OPS) natural gas distribution systems pipeline safety regulations are required to report annually, and for each reportable incident, certain information about those systems. RSPA/OPS uses this information to compile a national pipeline inventory, to identify and determine the scope of safety problems, and to target inspections. The information provides the basis for more efficient and meaningful analyses of RSPA/OPS gas distribution pipeline incident and annual data.

RSPA/OPS uses pipeline incident and annual data to identify safety issues and to target risk-based inspections. The data are collected from incidents reported by operators on RSPA Form F 7100.1, Incident Report—Gas Distribution Pipelines. Operators are required to file an incident report form within thirty days after a reportable incident occurs. Annual information is collected from operators reporting on RSPA Form F 7100.1–1, Annual Report ''Gas Distribution Pipelines. Operators are required to file annual report forms with RSPA/OPS by March 15th for the preceding calendar year.

RSPA/OPS published a notice in the **Federal Register** on June 5, 2003 (68 FR 33759) inviting comments on proposed revisions to the gas distribution pipeline operator incident and annual reports and associated instructions. These revisions require operators to submit information necessary for the normalization of incident information for safety trend analysis. The proposed changes are intended to make information collection more useful to the public, government agencies, and industry.

Summary of Comments

In response to the **Federal Register** notice of June 5, 2003 (68 FR 33759) RSPA/OPS received comments from the American Gas Association (AGA), the American Public Gas Association (APGA), the State of Colorado Public Utilities Commission (CPUC), Southern Connecticut Gas and the Connecticut Natural Gas Corporation (Connecticut), Consolidated Edison Company of New York, Inc. (Con Edison), Southwest Gas Corporation (Southwest), Atmos Energy Corporation (Atmos), and Mr. John Erikson, Pipeline Safety Consultant (Mr. Erikson). The comments and RSPA/OPS responses are summarized below for the proposed incident and annual report forms and instructions.

Incident Report Form RSPA F 7100.1

Operator Time Burden

AGA expects that, at least for the first year, the operator burden for completing the forms will exceed the estimated 12 hour completion time and cost burden. Gas distribution pipeline operators usually computerize the collection of incident and annual report form data.

Approximately five percent of the workforce may have to be trained to manage the new data format. One operator estimated that $40,000 would be spent to reprogram the data systems that collect, record, validate, retrieve, and process this information. APGA states that asking for extraneous information will increase compliance costs.

RSPA/OPS Response: RSPA/OPS agrees with the comment that the amount of time to complete the forms was underestimated in the notice. We have considered the extra impact of computerization and the cost of increased training, and have doubled the amount of estimated time to

complete the required incident and annual report forms.

RSPA/OPS believes that the time differential for filing a revised incident report compared to the existing incident report is small, because the form is completed for only one of the 25 cause categories for any given incident. Furthermore, because only a small percentage of distribution operators have reportable incidents, the cumulative total time for filing the revised annual information with RSPA/OPS will not increase significantly.

The revised natural gas distribution pipeline operator annual report is substantially unchanged, with the major revision being the addition of the new table for mileage by decade of installation. The increased time to file the new information for mileage by decade of installation should not be substantial for most companies, because the information will be readily available in existing computerized systems for those decades for which the information is available. When the information is not available, RSPA agrees that mileage should be tabulated in the ''Unknown'' category, in lieu of an extensive and costly information gathering effort. For those operators with computerized systems, there would be an initial cost for conversion to provide the information in the tabulated format, but RSPA/OPS believes the cost would be minimal and the value of collecting the information outweighs completion time or conversion costs. Smaller companies without computerization of the information would generally have little mileage to tabulate. This would result in a minimal increase in preparation time relative to the time required to complete the current form.

Operator Cost Burden

AGA stated that:

> * * * [p]roper trending of incidents needs to account for inflationary cost increases. The $50,000 [property damage] incident reporting threshold has not been increased for more than ten years. The effect of inflation over a period of time involving the past decades can be considerable.

For example, a $50,000 loss in 1989 dollars would be equivalent to $61,543 in 1998. Conversely, if inflation is ignored, a $50,000 incident today can be compared to a $40,622 incident in 1989. Thus, when adjusted for inflation, natural gas distribution incidents decreased from 105 in 1989 to 98 in 1998. Accordingly, AGA suggests that, as part of a future rulemaking, OPS consider raising the monetary threshold for incident reporting to a higher limit. Additionally, any reporting of intrastate incidents meeting lower cost thresholds (*e.g.*, $5,000) should be identified and segregated from the $50,000 incidents.

RSPA/OPS response: RSPA/OPS interprets AGA's comment to mean that if operators were required to report incidents with property damage of $50,000 in 1989, they would estimate the change in the consumer price index and report only incidents with a real cost of $50,000 in 2003. Although this would save operators a small amount of money in reduced paperwork costs, it would cause a great loss to RSPA/OPS in terms of safety information. For instance, if there were 10 fewer incidents reported per year, this would save operators 120 hours per year if each incident took 12 hours to report. At $80 per hour, the total savings would be less than $1,000 per year. However, if the information from any incident helped RSPA/OPS identify a potential problem that could prevent one major incident in the future, the value of this information would potentially prevent an incident that could cost millions of dollars in property damage, as well as preventing potential injuries or fatalities.

RSPA/OPS feels the small burden of reporting incidents resulting in $50,000 or more in property damage is outweighed by the benefit of the information provided. Due to the relative scarcity of pipeline incidents, the information that is gained from any one incident is very valuable and justifies the minimal expense to the operators.

Data Clarity and Intended Use

APGA observed that if data elements and instructions are unclear, incorrect data submissions will make it less likely that statistically significant conclusions could be drawn from the information. APGA supports data collection if the data is readily available and beneficial, but urges RSPA/OPS not to collect data unless it can identify how it will be used in analyses. Moreover, APGA urges RSPA/OPS to provide information on the intended use for each data element requested.

RSPA/OPS response: RSPA/OPS agrees that unclear instructions could result in incorrect submissions and our goal is to ensure that all instructions are as clear as possible. However, practicality and resource constraints prohibit line-by-line justification of each requested data element. Current RSPA/OPS forms are based on the work of two separate data teams that extensively evaluated reporting needs, taking into consideration the American Society of Mechanical Engineers (ASME) cause categories contained in standard ASME B31.4. These cause categories have already been adopted for natural gas transmission incident and hazardous liquid accident report forms beginning in 2002, along with the adopted stakeholder best practices. RSPA/OPS based its submission requirements on this information and concludes that its data requests are reasonable and cost of compliance is minimal.

Item Labeling

AGA, Con Edison, and Southwest recommend renumbering subsections to correct sequential item identification. Various minor renumbering suggestions were made to improve form flow. For brevity's sake, they are not individually outlined in this summary.

RSPA/OPS response: Renumbering and reformatting suggestions are accepted as general recommendations for proper formatting and increased clarity.

Latitude/Longitude

AGA and APGA request definition of the phrase ''projections and datum used in collecting this data.'' Both associations ask for clear identification of where this information is to be entered on the form or elimination of the phrase from the form instructions.

AGA alleged that many local distribution company operators may not have latitude and longitude information and the information would more likely be used by cross-country pipeline operators. AGA also noted that while Tiger/Line Data tools were considered helpful in locating latitude and longitude, AGA believes it is important for operators to understand how the data would be used so they could support RSPA/OPS data trending efforts. AGA recommends the inclusion of form instructions that demonstrate how latitude/longitude data would be used.

APGA tested logon time to the tiger.census.gov website (*http://tiger.census.gov/cgi-bin/mapbrowse-tbl*) to determine the time required to pinpoint the latitude and longitude of the APGA office using a broadband internet connection. This effort required approximately ten minutes and provided an address to seven decimals. However, the form's space allotment does not provide enough room for numbers of this size.

APGA believes there is no known or proven geographical trend in incidents. If no potential use for this data can be identified, APGA urges RSPA/OPS to delete it from the form and instructions. If, however, RSPA/OPS chooses to continue to ask for the data, it should specify how many decimals to include

and provide sufficient space on the form.

Southwest stated that the additional request for latitude and longitude requires an increase in man-hours of approximately ten to thirty minutes using the website, depending on the location to research. Southwest finds the website non-user friendly and states that returned results were only marginally accurate because gas lines are not shown on base maps. Southwest believes these fields should be removed if they are not going to be significant in analysis.

APGA and Southwest question the value of collecting latitude/longitude data and its application for incident analyses.

RSPA/OPS Response: We have eliminated the request for projections and datum used in collecting latitude/longitude information. However, RSPA/OPS requests latitude and longitude information for the specific purpose of obtaining a location description to pinpoint the site of the incident. Without this information, RSPA/OPS would not be able to geographically locate most incidents.

Furthermore, RSPA/OPS is often requested by Congress to provide maps of gas pipeline incidents, necessitating this data collection. RSPA/OPS is also working to create risk-based tools to assist in targeting solutions where problems occur, to identify risks in highly-populated corridors, and to identify future risks in expected growth corridors. Latitude and longitude information further provides macro level information necessary to develop these risk-based tools.

RSPA/OPS is requiring latitude and longitude to be stated in decimal degrees with a minimum of five decimal places. No projection is required. Form instructions have been clarified to further explain how latitude and longitude should be reported. In the event operators lack GIS capability, latitude and longitude is readily available on the Internet. As APGA noted, and tests by RSPA/OPS confirm, trials to access the Tiger/Line were successful within ten minutes or less. Note, however, that operators are not required to use the Tiger/Line site. Many similar Internet tools are available that will facilitate provision of latitude/longitude coordinates.

Federal Land Incident

AGA and Southwest allege that it is the responsibility of RSPA/OPS to obtain federal land location, and not that of the operator. Definitions for ''federal land'' provided for the incident and annual reports are cited as inconsistent. A recommendation was made to use the same definition in both instructions.

RSPA/OPS Response: RSPA/OPS requires Federal Land identification for incidents that occur on federal lands to comply with 30 U.S.C. 185. RSPA/OPS has revised the definition in the form instructions to state: ''All lands owned by the United States except lands in the National Park System, lands held in trust for an Indian or Indian tribe, and lands on the Outer Continental Shelf.''

Type of Leak or Rupture

AGA stated: ''[t]ype of leak or rupture asks the operator for a puncture diameter in inches. There may be situations where the puncture is not circular in shape. If this data is to be used to calculate areas of the puncture opening, rectangular dimensions should also be sought for punctures that approach a rectangular shape.''

RSPA/OPS response: It is not the intent of RSPA/OPS to restrict measurements to circular dimensions. For the purposes of this data collection, provide length in inches of a representational cross section of the leak or rupture, or diameter, whichever best suits the shape of the puncture. We further clarify this in the instructions.

Leak Reporting

APGA stated:

> OPS asks operators to report the type of leak or rupture. The instructions for this section are confusing. In the instructions OPS includes a note to operators not to report leaks that are either inconsequential or incidental to the operation of the pipeline and which can be repaired under routine daily maintenance. Neither of these types of leaks would be involved in an incident, therefore would not be reported on the incident form under any circumstances. The instructions would be more clear if this note would simply state that the operator should only report information about the one leak that the operator has determined to be the proximate cause of the incident.

RSPA/OPS response: RSPA/OPS agrees with the comment and is clarifying the instructions accordingly.

Pinhole Leaks

Southwest comments:

> * * * RSPA/OPS has not defined what constitutes a pinhole. If operators are left to interpret this, each operator will have its own definition of a pinhole—that will vary from operator to operator. This in effect will minimize the usefulness of any type of meaningful analysis because of the various criteria used to establish the date. Southwest suggests that RSPA/OPS define what constitutes a pinhole.

RSPA/OPS Response: RSPA/OPS agrees with the comment concerning the need for a definition of ''pinhole'' and will define a ''pinhole'' as one that is hard to see with the naked eye characterized as being a small hole made as by a pin.

Consequences—Reporting Reasons

Connecticut commented on the section of the form titled ''Consequences.'' The current report has a heading for the same type of information, titled ''Reasons for Reporting.'' Those reasons align directly with criteria in 49 CFR Part 191—to make clear for reporting purposes why the Operator is reporting the incident. The proposed change in the section heading from ''Reasons for Reporting'' to ''Consequences'' substantially alters the meaning and causes confusion with the current report. Connecticut recommends the section heading be retained as ''Reasons for Reporting.'' Additional recommendations include retaining all the areas under ''Reasons for Reporting'' as in the existing report and in alignment with Part 191 reporting criteria.

The two proposed additions, ''gas ignited'' and ''evacuation,'' are not specific Part 191 reporting criteria and can be open to interpretation and confusion. Connecticut asks, ''[i]f during a planned purging operation, an operator ignited and burned off gas, would that trigger a report, since ''gas ignited'' is now one of the ''consequences, or if 3 people were evacuated from a home by the Fire Department because of a gas odor due to a pilot light out (non-jurisdictional), would that trigger a Report?''

RSPA/OPS response: All the items in this revised section are not triggers (*i.e.*, gas ignited and evacuation) for filing a natural gas distribution incident. The ''Consequences'' title has been adopted to align with the gas transmission form and the hazardous liquid accident form revisions that also adopted the revised heading for this section. A ''reason for reporting'' is readily discernable regardless of what the section heading is labeled. For consistency with the natural gas transmission and hazardous liquid incident and accident forms, RSPA/OPS therefore retains the proposed ''Consequences'' title for this section.

The ''gas ignited'' and ''evacuation'' events will not trigger a report filing, because these revisions do not change the reporting criteria.

Estimated Property Damage/Loss

AGA asks that cost of relighting gas services shut off due to incidents be included in the instructions for estimated costs because all property

damages related to the incident should be reported. Southwest requests clarification if relighting costs are to be included in the total dollars for property damage.

RSPA/OPS response: We agree and we will clarify that relighting costs are to be included in the instructions.

Gas Ignited—Explosion or No Explosion

The current form instructions require operators to report whether gas ignited with or without an explosion, but do not clarify at what point in time ''explosion'' is considered to have occurred or what constitutes a fire or explosion. AGA and Southwest suggest adoption of definitions based on National Fire Protection Association (NFPA) standards.

APGA states that an unconfined cloud of natural gas cannot explode (*i.e.*, causing a shock wave that causes damage outside the immediate area of the gas cloud). If gas is ignited within a confined space (*e.g.*, within a building) it can cause the building to explode. APGA does not understand how RSPA/OPS would treat an incident differently depending on whether property damage was caused by fire or explosion of a structure. Given the confusion about what is or is not an explosion, any analysis relying on this data element is unlikely to provide statistically significant results. APGA suggests that the term ''explosion'' not be included on the form, but instead that RSPA/OPS ask whether the gas ignited or did not ignite. Con Edison recommends re-labeling the field ''Gas Ignited—No Explosion'' to ''Gas Ignited''.

RSPA/OPS Response: To provide needed clarity, RSPA/OPS has relabeled block 5d on the form to ''Gas Ignited,'' adding two checkbox options, one appearing as ''explosion'' and the other as ''no explosion.'' Block 5e has been relabeled as ''Gas Did Not Ignite,'' adding checkbox options ''explosion'' and ''no explosion.'' RSPA/OPS did not propose to adopt a definition of ignition, fire, or explosion based on NFPA standards. We will continue to rely on the common understanding of these terms as reflected in NFPA and other documents and standards.

Evacuation Reason

RSPA/OPS asks operators to estimate the number of persons evacuated as a result of the incident. Commenters noted that evacuation is sometimes performed by firemen, police, or other emergency officials, in which case the operator may not know how many persons were evacuated. Even when the operator requests evacuation, obtaining an accurate count of the number of persons is not and should not be a priority. RSPA/OPS should clarify that the operator is not expected to expend significant time and effort to determine this number. Southwest requests clarification of which field should be selected as the default when the reason for evacuation or who ordered it is not known. If there is no default field, a supplemental report will have to be sent to RSPA, possibly contradicting the idea behind the Paperwork Reduction Act of 1995. A similar comment stated that supplemental report filing may contract the intent of the Paperwork Reduction Act of 1995 regarding incidents with cause of plastic pipe failure not always determined or known at the time that the report is submitted.

RSPA/OPS Response: The operator is not expected to expend significant time and effort to determine the numbers of people involved during an evacuation. An indication of order of magnitude is sufficient (1, 10, or closest hundred, thousand, *etc.*) Local companies should have contact with local emergency responders and officials as part of their standard operating procedures, and obtaining this information could be as simple as calling officials and speaking with responders.

Filing supplemental report information is routine where additional information not available at the time of incident becomes available. Furthermore, RSPA/OPS was urged by the General Accounting Office and others to seek complete incident information beyond that which is known at initial reporting.

Incident Origin—Failure Occurred On

Con Edison recommends that another option labeled ''Saddle Tee'' be added because it may be confusing as to whether the failure occurred on the body of pipe, joint, component, or other.

RSPA/OPS Response: RSPA/OPS believes that the general public will be best served by utilizing the ''Other'' option along with the form allowance for a write-in cause. This will allow RSPA/OPS to consider future additions based on frequency of write-in causes.

Corrosion

AGA and Southwest point out that current form fields only allow operators to answer yes or no to the question of whether the pipe was previously damaged in the area of corrosion. Operators would be able to correctly indicate unknown if a field were provided or if instructions included the caveat that a ''no'' response would be inclusive of an ''unknown'' response.

RSPA/OPS response: RSPA/OPS has added an ''Unknown'' field for this element.

Other Outside Force Damage—Fire/Explosion as Primary Cause

AGA believes that instructions on reporting fire or explosion occurring as a result of the pipeline failure, but not as a cause of the failure, should read:

> If a fire/explosion occurred as a result of the failure, but was not a primary cause of the failure, do not check item 10 of this section. Part A, items 5d and/or 5f should already be checked to show that the fire/explosion occurred.

Southwest believes that the instructions given for completing this section are inaccurate, and currently lead the operator to the section referencing corrosion. If it is the intent of the form to cover the possibility of fire and/or explosion due to corrosion, Southwest explains that there could be other causes of failure (fatigue, stresses due to rocks or other infrastructure), and suggests that RSPA/OPS revisit the instructions for clarity and relevance.

Con Edison recommends that an item be added for ''Electric Wire Down or Electric Fault in a Manhole.'' The current form instructions appear to cover only one possibility, namely a fire and/or explosion due to corrosion. There could be other causes of failure due to a downed electric wire or an electric fault in a manhole, which are more common type incidents.

RSPA/OPS response: RSPA/OPS agrees with the comments and has revised the instructions.

Test Medium

RSPA/OPS requires operators to specify the test medium used to establish the Maximum Allowable Operating Pressure (MAOP) and provides check boxes for ''water,'' ''natural gas,'' ''inert gas,'' and ''other.'' If RSPA/OPS elects to include this data element in the final revised form, APGA recommends that ''air'' be included as one of the options since the vast majority of distribution piping is tested with air prior to being placed into service. APGA questions whether knowledge of the test medium is necessary for any analysis.

RSPA/OPS Response: RSPA/OPS agrees that information on the test medium is not necessary for analysis. We have eliminated this data element.

Equipment or Operations

RSPA/OPS offers the cause option, ''Ruptured or leaking seals/pump packing.'' APGA finds this confusing as pumps are not a common component on gas distribution systems. The

association also questions whether this refers to pumps only, or if seal or packing leaks on valves, couplings, regulators, meters and other equipment should be included. Unless RSPA/OPS requires that the cause categories be identical across all three incident forms (liquid, gas transmission, and distribution), the field should be deleted. If the pump identification is retained on the form, RSPA/OPS should recognize that confusion about its proper application may make it more difficult to draw statistically significant conclusions about causes of equipment and operations failures.

Con Edison believes this section refers more appropriately to hazardous liquid operations, especially ''pump packing.'' They recommend changing this item to address more common equipment failures, such as ''Mechanical Device Not Installed Properly.'' There are many mechanical connectors being used on plastic pipe systems that may not be properly installed, and could lead to an incident. There should be a provision for this. Although there is a box to check off for ''Poor Workmanship,'' there appears to be no follow-up to this category when a mechanical device is involved.

RSPA/OPS Response: RSPA/OPS recognizes that pump packing is not a common element in the natural gas distribution pipeline industry. Therefore, we change this cause category from ''Ruptured or leaking seals/pump packing'' to ''Leaking Seals.''

Annual Report Form RSPA F 7100.1–1

Federal Land Incident

With regard to leaks reported on annual reports, AGA asks RSPA/OPS to clarify the exclusion that ''Federal Buildings such as Federal court houses and warehouses are not to be reported in the incident on Federal lands.'' Southwest asks whether the exclusion also applies to leaks reported on the annual report.

RSPA/OPS Response: RSPA/OPS has corrected the definition in the form instructions to state: ''All lands owned by the United States except lands in the National Park System, lands held in trust for an Indian or Indian tribe, and lands on the Outer Continental Shelf.'' We have eliminated the exclusion of federal buildings because determining whether buildings were federally owned would be an unnecessary burden on pipeline operators and would serve no analytical purpose.

Miles of Main and Numbers of Services by Decade of Installation

RSPA/OPS asks operators to submit data on the decade of installation of mains and services. AGA and APGA state that this information may not be readily available to operators, and ask RSPA/OPS to clarify that operators are not required to undertake a massive records search to develop the data. APGA offers that operators should be able to list mains and services as ''unknown'' if the data is not readily available.

APGA notes that RSPA/OPS recently began collecting this data from gas transmission and hazardous liquid operators. Transmission and liquid operators are more likely to have the information readily available because these pipelines tend to be constructed in major projects in a particular decade. Distribution mains and services are installed in smaller increments. Every day an operator may be installing new mains and services, retiring mains and services, and replacing small sections of its piping network. Depending on the record keeping systems, developing the requested installation-by-decade data could require significant time and effort.

Southwest believes that the new requirement will require an increase in the number of hours required to collect distribution data—approximately a day or two longer than is required to complete the current distribution annual report.

Atmos questions the value of such information. Until the value of the data is better justified, Atmos prefers that the proposed changes not be made.

RSPA/OPS Response: The lack of information about overall age of the national pipeline infrastructure has been a major data gap identified by RSPA/OPS, the National Transportation Safety Board, the Department of Transportation Office of the Inspector General, the General Accounting Office, and others. RSPA/OPS also emphasizes that operators are not required to undertake a massive records search to develop the data if it is not readily available. RSPA/OPS seeks best estimates only and does not expect operators to conduct costly manual searches. However, we believe that information on most lines should be available. RSPA/OPS believes the value of the data will increase over time and its accuracy will improve. In the long term, mileage by decade will be of significant value.

Average Length of Service Line

Mr. Erikson reports that the use of the RSPA/OPS Annual Report data for analyses is necessary in his safety consultancy, and therefore accuracy and usability of the data is of high interest. Mr. Erikson recommends that RSPA/OPS cease asking for average length of service line. Few, if any, operators know this length, and nearly one-sixth of operators reported an average length of zero feet. Experience with operators points to the fact that numbers reported are often a guess, rendering the information unreliable.

RSPA/OPS Response: The estimated average length of service line data element is the sole source for mileage of services nationally. RSPA/OPS uses this information to survey per decade changes in the overall environment. We also use the information to characterize the overall infrastructure. Therefore, this data element will be retained.

Leak Cause

RSPA/OPS proposes to revise the categories for leaks eliminated and/or repaired during the year. However, APGA asks that RSPA/OPS recognize that many operators collect leak repair data using forms and procedures provided to the field crews. Many operators use computer software to store this data. These forms, procedures, and software will have to be modified to reflect the new categories and the new procedures must be explained to field personnel. APGA urges RSPA/OPS to provide adequate lead-time to allow operators to modify their forms, procedures, and software to start tracking new categories. A minimum of six months between the date that RSPA/OPS promulgates changes to leak categories and the start of the year for which new annual reports will be used to collect leak repair data is deemed reasonable.

RSPA/OPS Response: RSPA/OPS acknowledges that time is needed to revise systems to tabulate the new information on the revised annual report form. Accordingly, we will request the information annually beginning March 15, 2005 for calendar year 2004.

Altering Leak Cause Categories

CPUC provided RSPA/OPS with an extensively revised instruction guide and proposed form for annual report completion to ensure leakage data that would be useful for Colorado regulatory analysis purposes. The proposed form is a tool that alters past definitions used to classify ''leaks'' into different ''Leak Cause'' categories. CPUC's recommended instructions are provided with the intent to provide clarity and correlation with past leak cause data collection efforts. Because in-depth

failure investigations are conducted for each ''incident'' as defined under 49 CFR 191.3 during the 30-day incident reporting period, a failure investigation into the cause of a leak under normal gas distribution system operating conditions is usually determined by the operator's field technician. Therefore, instructions should help clarify which leak category the field technician must focus on for the purposes of the annual report.

CPUC suggests that the data collection and reporting using the proposed form should coincide with a full calendar year of leak repair data to ensure meaningful data reporting and analysis. Partial calendar year or ''Unknown'' data classification will result in inconsistent data collection and questionable conclusions.

RSPA/OPS Response: The data collection for the natural gas distribution annual report has historically been, and will remain, per calendar year for the preceding calendar year. As stated above, we request the revised forms to be filed annually beginning March 15, 2005, for calendar year 2004.

Combining Categories

Southwest questions combining equipment leaks and operation leaks into one category. As explained in the instructions for the annual report, equipment leaks are leaks resulting from malfunctioning valves, regulators, couplings, etc. Operation leaks are leaks resulting from inadequate procedures or safety practices, failure to follow correct procedures, or other operator errors. These categories are distinct and justify separation into their own category. Southwest believes that separating these into distinct categories will better enable RSPA/OPS to perform a proper analysis of the data.

RSPA/OPS Response: RSPA/OPS agrees that the categories are distinct and justify separation into their own category. Accordingly, the form and instructions are changed to separate Equipment leaks and Operation leaks.

Abstract of Proposed Information Collection and Request for Comments

The forms to be revised are two of the four gas pipeline reporting forms authorized by Information Collection OMB 2137–0522, Incident and Annual Reports for Gas Pipeline Operators. The proposed revisions represent the final phase of an ongoing process to revise all incident and annual reports. RSPA/OPS revised the natural gas transmission operator annual report forms in 2001 for collection beginning in 2002.

Title of Information Collection: Incident and Annual Reports for Gas Pipeline Operators—Revision of Natural Gas Distribution Incident Report (RSPA F 7100.1) and the Annual Report Form for Gas Distribution Systems (RSPA F 7100.1–1)

OMB Number: 2137–0522.

Respondents: Natural Gas Distribution Pipeline Operators.

Estimated Number of Respondents: 1,200.

Estimated Total Annual Burden on Respondents: 30,240 hours.

Comments are invited on:

(a) The need for the proposed collection of information for the proper performance of the functions of the agency, including whether the information will have practical utility;

(b) the accuracy of the agency's estimate of the burden of the proposed collection of information, including the validity of the methodology and assumptions used;

(c) ways to enhance the quality, utility, and clarity of the information to be collected; and

(d) ways to minimize the burden of the collection of information on those who are to respond, including the use of appropriate automated, electronic, mechanical, or other technological collection techniques.

Issued in Washington, DC, on December 24, 2003.

Stacey L. Gerard,

Associate Administrator for Pipeline Safety.

[FR Doc. 03–32201 Filed 12–30–03; 8:45 am]

BILLING CODE 4910–60–P

DEPARTMENT OF TRANSPORTATION

Research and Special Programs Administration

Office of Hazardous Materials Safety; Notice of Applications for Modification of Exemption

AGENCY: Research and Special Programs Administration, DOT.

ACTION: List of applications for modification of exemption.

SUMMARY: In accordance with the procedures governing the application for, and the processing of, exemptions from the Department of Transportation's Hazardous Material Regulations (49 CFR part 107, subpart B), notice is hereby given that the Office of Hazardous Materials Safety has received the application described herein. This notice is abbreviated to expedite docketing and public notice. Because the sections affected, modes of transportation, and the nature of application have been shown in earlier Federal Register publication, they are not repeated here. Request of modifications of exemptions (e.g. to provide for additional hazardous materials, packaging design changes, additional mode of transportation, etc.) are described in footnotes to the application number. Application numbers with the suffix ''M'' denote a modification request. These applications have been separated from the new application for exemption to facilitate processing.

DATES: Comments must be received on or before January 15, 2004.

ADDRESS COMMENTS TO: Record Center, Research and Special Programs Administration, U.S. Department of Transportation, Washington, DC 20590.

Comments should refer to the application number and be submitted in triplicate. If Confirmation of receipt of comments is desired, include a self-addressed stamped postcard showing the exemption number.

FOR FURTHER INFORMATION CONTACT: Copies of the applications are available for inspection in the Records Center, Nassif Building, 400 7th Street SW, Washington DC or at *http://dms.dot.gov*.

This notice of receipt of applications for modification of exemption is published in accordance with part 107 of the Federal hazardous materials transportation law (49 U.S.C. 5117(b); 49 CFR 1.53(b)).

Issued in Washington, DC, on December 24, 2003.

Ryan Posten,

Exemptions Program Officer, Office of Hazardous Materials Exemptions & Approvals.

MODIFICATION EXEMPTIONS

Application No.	Docket No.	Applicant	Regulation(s) affected	Modification of exemption	Nature of exemption thereof
11215–M		Orbital Sciences Corporation, Majave, CA.	49 CFR Part 172, Subparts C, D; 172.101, Special Provision 109.	11215	To modify the exemption to authorize an alternate takeoff/landing site of the L–1011/Pegasus fuel rocket.
11818–M		Raytheon Company, El Segundo, CA.	49 CFR 173.34(d)	11818	To modify the exemption to authorize alternative containers for the packaging and transport of heat pipes into larger assemblies in connection with a flight project spacecraft.
13181–M	RSPA–02–14022	Thermo MF Physics, Colorado Springs, CO.	49 CFR 173.403; 173.424.	13181	To modify the exemption to authorize a design change of the high voltage accelerator system for the transportation of a Division 2.2 material.
13318–M	RSPA–03–16446	Western Industries, Chilton, WI.	49 CFR 173.301; 177.840.	13318	To reissue the exemption originally issued on an emergency basis for the use of a DOT Specification cylinder packaged in an alternative method transporting certain Division 2.1 materials.

[FR Doc. 03–32194 Filed 12–30–03; 8:45 am]

BILLING CODE 4909–60–M

DEPARTMENT OF TRANSPORTATION

Research and Special Programs Administration

Office of Hazardous Materials Safety; Notice of Application for Exemptions

AGENCY: Research and Special Programs Administration, DOT.

ACTION: List of applications for exemption.

SUMMARY: In accordance with the procedures governing the application for, and the processing of, exemptions from the Department of Transportation's Hazardous Material Regulations (49 CFR Part 107, Subpart B), notice is hereby given that the Office of Hazardous Materials Safety has received the application described herein. Each mode of transportation for which a particular exemption is requested is indicated by a number in the ''Nature of Application'' portion of the table below as follows: 1—Motor vehicle, 2—Rail freight, 3—Cargo vessel, 4—Cargo aircraft only, 5—Passenger-carrying aircraft.

DATES: Comments must be received on or before January 30, 2004.

ADDRESS: Record Center, Research and Special Programs Administration, U.S. Department of Transportation, Washington, DC 20590.

Comments should refer to the application number and be submitted in triplicate. If Confirmation of receipt of comments is desired, include a self-addressed stamped postcard showing the exemption number.

FOR FURTHER INFORMATION CONTACT: Copies of the applications are available for inspection in the Records Center, Nassif Building, 400 7th Street SW, Washington DC or at *http://dms.dot.gov.*

This notice of receipt of applications for modification of exemption is published in accordance with Part 107 of the Federal hazardous materials transportation law (49 U.S.C. 5117(b); 49 CFR 1.53(b)).

Issued in Washington, DC, on December 24, 2003.

R. Ryan Posten,

Exemptions Program Officer, Office of Hazardous Materials, Exemptions & Approvals.

NEW EXEMPTION

Application No.	Docket No.	Applicant	Regulation(s) affected	Nature of exemption thereof
13341–N		National Propane Gas Association Washington, DC.	49 CFR 173.315(j)(4)	To authorize the one-way transportation in commerce of certain non-DOT specification storage tanks containing propane. (mode 1).
13343–N		Olin Corporation, Winchester Division, East Alton, IL.	49 CFR 173–60(b)(4); 177.834(1)(1).	To authorize the transportation in commerce of trinitroresorcinol, wetted, Class 1.1D, packaged in accordance with the required packaging instruction in motor vehicles equipped with heating and refrigerating (heat-pump) apparatus. (mode 1).
13344–N		Precision Technik, Atlanta, GA.	49 CFR 173.301(a)(f)(1); 180.209; 173.201; 173.202; 173.203; 173.302; 173.304.	To authorize the manufacture, marking and sale of a salvage cylinder which do not contain a pressure relief device for use in transporting damaged or leaking gas cylinder. (mode 1).
13347–N		ShipMate, Inc., Torrance, CA.	49 CFR 172.301; 172.401; 173.201; 173.202; 172.203(a); 172.301(c).	To authorize the transportation in commerce of certain unmarked, unlabeled, hazardous materials in single packagings or inner receptacles of combination packagings, placed in properly marked and labeled non-specification devices. (mode 1).

NEW EXEMPTION—Continued

Application No.	Docket No.	Applicant	Regulation(s) affected	Nature of exemption thereof
13336–N		Renaissance Industries, Sparpsville, PA.	49 CFR 173.302(a)(1); 173.304; 175.3.	To authorize the manufacture, mark, sale and use of a non-DOT specifications cylinder for use in transporting certain classes of hazardous materials. (modes 1, 2, 3, 4, 5).
13337–N		Albemarle Corporation, Baton Rouge, LA.	49 CFR 176.83(b)&(d)	To authorize the transportation in commerce of certain cylinders, non-bulk packaging and small portable tanks containing various Division 4.2 and 4.3 materials without meeting segregation requirements. (mode 3).
13338–N		Sacramento Municipal Utility District, Herald, CA.	49 CFR 173.403; 173.427(a), (b)& (c); 173.465(c)&(d).	To authorize the transportation in commerce of two steam generators having a Class 7 radioactive material on its surfaces. (mode 2).
13339–N		ExxonMobil Chemical Company, Mont Belvieu, TX.	49 CFR 173.242	To authorize the transportation in commerce of certain pyrophoric solids in non-DOT specification portable tanks comparable to DOT Specification 51 portable tanks with alternative testing criteria. (mode 1).

[FR Doc. 03–32195 Filed 12–30–03; 8:45 am]
BILLING CODE 4909–60–M

DEPARTMENT OF TRANSPORTATION

Research and Special Programs Administration (RSPA)

[Docket No. RSPA–98–4470]

Pipeline Safety: Meetings of the Pipeline Safety Advisory Committees

AGENCY: Office of Pipeline Safety, Research and Special Programs Administration, DOT.

ACTION: Notice; Meetings of the Technical Pipeline Safety Standards Committee and the Technical Hazardous Liquid Pipeline Safety Standards Committee.

SUMMARY: Meetings of the Technical Pipeline Safety Standards Committee (TPSSC) and the Technical Hazardous Liquid Pipeline Safety Standards Committee (THLPSSC) will be held from Tuesday, February 3 to Thursday, February 5, 2004, at the Washington-Dulles Airport Marriott Hotel, Dulles, Virginia. The Office of Pipeline Safety (OPS) will provide briefings on pending rulemakings and regulatory initiatives. The advisory committees will discuss various proposed rulemakings and associated risk assessments.

ADDRESSES: Members of the public may attend the meetings at the Washington-Dulles Airport Marriott Hotel, 45020 Aviation Drive, Dulles, Virginia. The exact location and room number for this meeting will be posted on the OPS Web page approximately 15 days before the meeting date at *http://ops.dot.gov*.

An opportunity will be provided for the public to make short statements on the topics under discussion. Anyone wishing to make an oral statement should notify Jean Milam, (202) 493–0967, not later than January 16, 2004, on the topic of the statement and the length of the presentation. The presiding officer at each meeting may deny any request to present an oral statement and may limit the time of any presentation.

You may submit written comments by mail or deliver to the Dockets Facility, U.S. Department of Transportation, Room PL–401, 400 Seventh Street, SW., Washington, DC 20590–0001. It is open from 10 a.m. to 5 p.m., Monday through Friday, except Federal holidays. You may also submit written comments to the docket electronically. To do so, log onto the following Internet Web address: *http://dms.dot.gov*. Click on ''Help & Information'' for instructions on how to file a document electronically. All written comments should reference docket number RSPA–98–4470. Anyone who would like confirmation of mailed comments must include a self-addressed stamped postcard.

Anyone is able to search the electronic form of all comments received in any of our dockets by the name of the individual submitting the comment (or signing the comment, if submitted on behalf of an association, business, labor union, etc.). You may review DOT's complete Privacy Act Statement in the **Federal Register** published on April 11, 2000 (Volume 65, Number 70; Pages 19477–78) or you may visit *http://dms.dot.gov*.

Information on Services for Individuals with Disabilities

For information on facilities or services for individuals with disabilities or to request special assistance at the meeting, contact Jean Milam at (202) 493–0967.

FOR FURTHER INFORMATION CONTACT: Cheryl Whetsel, OPS, (202) 366–4431 or Richard Huriaux, OPS, (202) 366–4565, regarding the subject matter of this notice.

SUPPLEMENTARY INFORMATION: The TPSSC and THLPSSC are statutorily mandated advisory committees that advise the Research and Special Programs Administration's (RSPA) Office of Pipeline Safety (OPS) on proposed safety standards for gas and hazardous liquid pipelines. These advisory committees are constituted in accordance with section 10(a)(2) of the Federal Advisory Committee Act (Pub. L. 92–463, 5 U.S.C. App. 1). The committees consist of 15 members—five each representing government, industry, and the public. The TPSSC and THLPSSC are tasked with determining reasonableness, cost-effectiveness, and practicability of proposed pipeline regulations.

Federal law requires that OPS submit cost-benefit analyses and risk assessment information on proposed safety standards to the advisory committees. The TPSSC and/or THLPSSC evaluate the merit of the data and methods used within the analyses, and when appropriate, provide recommendations relating to the cost-benefit analyses.

On Tuesday, February 3, 2004, from 9 a.m. to 12:30 p.m. e.s.t., the Technical Hazardous Liquid Pipeline Safety Standards Committee (THLPSSC) will meet. The preliminary agenda includes briefings on the following topics:

1. Hazardous Liquid Pipeline Operator Annual Report
2. Hazardous Liquid Integrity Management Program Update
3. Definition of Hazardous Liquid Gathering Lines

4. Permitting Project and Best Management Practices
5. Controller Project
6. Fatigue

On Tuesday, February 3, 2004, from 1:30 p.m. to 4 p.m. e.s.t., the THLPSSC and the Technical Pipeline Safety Standards Committee will meet in joint session and continue on Wednesday, February 4, 2004, from 9 a.m. to 4 p.m. e.s.t. OPS will provide the Committees with briefings on the following topics:

1. Periodic Underwater Inspections
2. Annual Update of Standards Incorporated by Reference
3. Pipeline Industry Implementation of Effective Public Awareness (API 1162)
4. Amendments to Operator Qualification.
5. 2005 Budget Proposal and Departmental Reorganization
6. Pipeline Research and Development Program
7. Common Ground Alliance Update
8. Inspector General and General Accounting Office Reports
9. National Pipeline Mapping System
10. National Pipeline Security Preparedness
11. Safety Orders and Penalty Structure
12. Fire Marshals Project
13. Council of Energy Resource Tribes (CERT)
14. Energy Impacts

On Thursday, February 5, 2004, from 9 a.m. to 1 p.m. e.s.t. the TPSSC will meet. The TPSSC will vote on the Cost Benefit for the Notice of Proposed Rulemaking on the Passage of Internal Inspection Devices. The TPSSC will also be provided briefings on the following topics:

1. Pipeline Integrity Management for Gas Transmission Pipelines in High Consequence Areas (Final Rule)
2. Pipeline Direct Assessment
3. Gas Gathering Line Definition
4. Gas Transmission Definition
5. Excess Flow Valves
6. Waivers for Class Location
7. Permit Project and Best Management Practices
8. Integrity Management Tracking System
9. Controller Project
10. Fatigue

Authority: 49 U.S.C. 60102, 60115.

Issued in Washington, DC on December 24, 2003.

Richard D. Huriaux,

Manager, Regulations, Office of Pipeline Safety.

[FR Doc. 03–32203 Filed 12–30–03; 8:45 am]

BILLING CODE 4910–60–P

DEPARTMENT OF TRANSPORTATION

Surface Transportation Board

[STB Finance Docket No. 34445]

Lehigh Valley Rail Management, LLC-Acquisition and Operation Exemption-Rail Lines in Pennsylvania

Lehigh Valley Rail Management, LLC (LVRM), a noncarrier, has filed a verified notice of exemption under 49 CFR 1150.31 to acquire and operate approximately 170.079 miles of rail line owned by ISG Railways, Inc. (ISGR).[1] LVRM will acquire and operate the following rail lines: (1) An approximately 132-mile line in Northampton County, PA, formerly operated by Keystone Railroad, LLC, comprised of yard and switching tracks, with no assigned mileposts; (2) an approximately 32-mile line in Cambria County, PA, formerly operated by Conemaugh & Black Lick Railroad, LLC, comprised of yard and switching tracks, with no assigned mileposts; and (3)(a) an approximately 4.5-mile line extending between approximately milepost 6.4 at Edensburg Junction and approximately milepost 10.45189, and (b) an approximately 1.579-mile connecting segment between milepost 15.355 (RJCP milepost 10.45189) and approximately milepost 16.934, in Cambria County, formerly operated by Cambria and Indiana Railroad, Inc.

LVRM certifies that its projected revenues as a result of this transaction will not exceed those that would qualify it as a Class III rail carrier and that such revenues will not exceed $5 million annually.

Consummation of the transaction was scheduled to take place on or after December 17, 2003, the effective date of the exemption (7 days after the exemption was filed).

If the verified notice contains false or misleading information, the exemption is void *ab initio.* Petitions to revoke the exemption under 49 U.S.C. 10502(d) may be filed at any time. The filing of a petition to revoke will not automatically stay the transaction.

An original and 10 copies of all pleadings, referring to STB Finance Docket No. 34445, must be filed with the Surface Transportation Board, 1925 K Street, NW., Washington, DC 20423–0001. In addition, a copy of each pleading must be served on Eric M. Hocky, Four Penn Center, Suite 200, 1600 John F. Kennedy Blvd., Philadelphia, PA 19103–2808.

Board decisions and notices are available on our Web site at *http://www.stb.dot.gov.''*

Decided: December 22, 2003.

By the Board, David M. Konschnik, Director, Office of Proceedings.

Vernon A. Williams,

Secretary.

[FR Doc. 03–31959 Filed 12–30–03; 8:45 am]

BILLING CODE 4915–00–P

[1] In May 2003, ISGR acquired the rail lines and substantially all other assets of the Bethlehem Steel Corporation subsidiary railroads. *See ISG Railways, Inc.—Acquisition of Control Exemption—Assets of Keystone Railroad LLC d/b/a Philadelphia, Bethlehem and New England Railroad Company, Conemaugh & Black Lick Railroad Company LLC, Steelton & Highspire Railroad Company LLC, Lake Michigan & Indiana Railroad Company LLC, Brandywine Valley Railroad Company LLC, Upper Merion & Plymouth Railroad Company LLC, Patapsco & Back Rivers Railroad Company LLC, and Cambria and Indiana Railroad, Inc.,* STB Finance Docket No. 34344 (STB served May 22, 2003). In this proceeding, ISGR has agreed to transfer to LVRM three of the subsidiary railroads along with related assets.

DEPARTMENT OF THE TREASURY

Office of the Comptroller of the Currency

Office of Thrift Supervision

BOARD OF GOVERNORS OF THE FEDERAL RESERVE SYSTEM FEDERAL DEPOSIT INSURANCE CORPORATION

Agency Information Collection Activities: Submission for OMB Review; Comment Request—CRA Sunshine

AGENCIES: Office of the Comptroller of the Currency (OCC), Treasury; Board of Governors of the Federal Reserve System (Board); Federal Deposit Insurance Corporation (FDIC); and Office of Thrift Supervision (OTS), Treasury.

ACTION: Joint notice and request for comment.

SUMMARY: In accordance with requirements of the Paperwork Reduction Act of 1995 (44 U.S.C. 3501 *et seq.*), the OCC, Board, FDIC, and OTS (collectively, the Agencies) may not conduct or sponsor, and a respondent is not required to respond to, an information collection unless it displays a currently valid Office of Management and Budget (OMB) control number. The Agencies hereby give notice that they plan to submit information collections regarding their respective CRA Sunshine (Disclosure and Reporting of CRA-Related Agreements) regulations to OMB for review and approval.

DATES: Submit written comments on or before January 30, 2004.

ADDRESSES: You should direct your comments to:

OCC: Public Information Room, Office of the Comptroller of the Currency, Mailstop 1–5, Attention: 1557–0219, 250 E Street, SW., Washington, DC 20219. Due to delays in paper mail delivery in the Washington area, commenters are encouraged to submit their comments by fax to (202) 874–4448, or by e-mail to *regs.comments@occ.treas.gov.* You can make an appointment to inspect the comments by calling (202) 874–5043 for an appointment.

Board: Comments may be mailed to Ms. Jennifer J. Johnson, Secretary, Board of Governors of the Federal Reserve System, 20th Street and Constitution Avenue, NW., Washington, DC 20551. However, because paper mail in the Washington area and at the Board of Governors is subject to delay, please consider submitting your comments by e-mail to *regs.comments@federalreserve.gov*, or faxing them to the Office of the Secretary at (202) 452–3819 or (202) 452–3102. Members of the public may inspect comments in Room MP–500 between 9 a.m. and 5 p.m. on weekdays pursuant to § 261.12, except as provided in § 261.14, of the Board's Rules Regarding Availability of Information, 12 CFR 261.12 and 261.14.

FDIC: Steven F. Hanft, (202) 898–3907, Legal Division (Consumer and Compliance Unit), Room MB–3064, Federal Deposit Insurance Corporation, 550 17th Street, NW., Washington, DC 20429. All comments should refer to the OMB control number 3064–1039. Comments may be hand-delivered to the guard station at the rear of the 17th Street building (located on F Street) on business days between 7 a.m. and 5 p.m.

OTS: Information Collection Comments, Chief Counsel's Office, Office of Thrift Supervision, 1700 G Street, NW., Washington, DC 20552, by fax to (202) 906–6518, or by e-mail to *infocollection.comments@ots.treas.gov.* OTS will post comments and the related index on the OTS Internet site at *www.ots.treas.gov.* In addition, interested persons may inspect comments at the Public Reading Room, 1700 G Street, NW., by appointment. To make an appointment, call (202) 906–5922, send an e-mail to *publicinfo@ots.treas.gov,* or send a facsimile transmission to (202) 906–7755.

OMB Desk Officer: Joseph F. Lackey, Jr., Office of Information and Regulatory Affairs, Office of Management and Budget, New Executive Office Building, Room 10235, Washington, DC 20503, or e-mail to *jlackeyj@omb.eop.gov.*

FOR FURTHER INFORMATION CONTACT: You can request additional information or a copy of the collection from:

OCC: John Ference, Acting OCC Clearance Officer, (202) 874–4824, Legislative & Regulatory Activities Division, Office of the Comptroller of the Currency, 250 E Street, SW., Washington, DC 20219.

Board: Cindy Ayouch, Federal Reserve Board Clearance Officer, (202) 452–3829, Division of Research and Statistics, Board of Governors of the Federal Reserve System, Washington, DC 20551. Telecommunications Device for the Deaf (TDD) users may contact (202) 263–4869, Board of Governors of the Federal Reserve System, Washington, DC 20551.

FDIC: Steven F. Hanft, FDIC Clearance Officer, (202) 898–3907, fax number (202) 898–3838, Legal Division (Consumer and Compliance Unit), Federal Deposit Insurance Corporation, Room MB–3064, 550 17th Street, NW., Washington, DC 20429.

OTS: Marilyn K. Burton, OTS Clearance Officer, at marilyn.burton@ots.treas.gov, (202) 906–6467, or facsimile number (202) 906–6518, Regulations and Legislation Division, Chief Counsel's Office, Office of Thrift Supervision, 1700 G Street, NW., Washington, DC 20552.

SUPPLEMENTARY INFORMATION:

Comments

The Agencies jointly requested comments on the proposed extension, without revision, of the information collections contained in the CRA Sunshine regulations on September 18, 2003 (68 FR 54785). No comments were received.

Titles

OCC: Disclosure and Reporting of CRA-Related Agreements (12 CFR 35).

Board: Disclosure and Reporting Requirements of CRA-Related Agreements (Reg G).

FDIC: CRA Sunshine (12 CFR 346).

OTS: CRA Sunshine (12 CFR 533).

OMB Control Numbers

OCC: 1557–0219.
Board: 7100–0299.
FDIC: 3064–1039.
OTS: 1550–0105.

Description

Section 48 of the Federal Deposit Insurance Act requires nongovernmental entities or persons (NGEPs), insured depository institutions, and affiliates of insured depository institutions that are parties to certain agreements that are in fulfillment of the Community Reinvestment Act of 1977 to make the agreements available to the public and the appropriate agency, and to file annual reports concerning the agreements with the appropriate agency.

The Agencies are proposing to extend OMB approval of the information collections associated with the regulations implementing the CRA Sunshine provisions of section 48. The regulations are found at 12 CFR part 35 (OCC), 12 CFR part 207 (Board), 12 CFR part 346 (FDIC), and 12 CFR part 533 (OTS). This submission involves no change to the regulations or to the information collection requirements.

The information collection requirements contained in the regulations are as follows:

Section ____.6(b)(1) requires each nongovernmental entity or person (NGEP) and each insured depository institution or affiliate (IDI) that enters into a covered agreement to make a copy of the covered agreement available to any individual or entity upon request.

Section ____.6(c)(1) requires each NGEP that is a party to a covered agreement to provide within 30 days after receiving a request from the relevant supervisory agency (1) a complete copy of the agreement; and (2) in the event the NGEP seeks confidential treatment of any portion of the agreement under FOIA, a copy of the agreement that excludes information for which confidential treatment is sought and an explanation justifying the request.

Sections ____.6(d)(1)(i) and ____.6(d)(1)(ii) require each IDI within 60 days of the end of each calendar quarter to provide each supervisory agency with either (1) a complete copy of each covered agreement entered into by the IDI or affiliate during the calendar quarter; and in the event the IDI seeks confidential treatment of any portion of the agreement under FOIA, a copy of the agreement that excludes information for which confidential treatment is sought and an explanation justifying the request; or (2) a list of all covered agreements entered into by the IDI or affiliate during the calendar quarter.

Section ____.6(d)(2) requires an IDI or affiliate to provide any relevant supervisory agency with a complete copy and public version of any covered agreement, if the IDI submits a list of their covered agreements pursuant to section ____.6(d)(1)(ii).

Section ____.7(b) requires each NGEP and IDI that is a party to a covered agreement to file an annual report with each relevant supervisory agency concerning the disbursement, receipt,

and uses of funds or other resources under the covered agreement.

Section ____.7(f)(2)(ii) requires an IDI that receives an annual report from a NGEP pursuant to section ____.7(f)(2)(i) to file the report with the relevant supervisory agency or agencies on behalf of the NGEP within 30 days.

Section ____.4(b) requires an IDI that is party to a covered agreement that concerns any activity described in section ____.4(a) of a CRA affiliate to notify each NGEP that is a party to the agreement that the agreement concerns a CRA affiliate.

Affected Public

Business or other for-profit; individuals.

Burden Estimates

The reduction in the estimated burden is due to a change in the method of estimation. The old estimate, made three years ago, was based on the assumption and projection that 50 percent of insured depository institutions would be parties to a covered agreement. The new estimate is based on the actual number of IDIs or their affiliates that reported covered agreements to the agencies in 2001 and 2002, and is therefore more accurate. The number of NGEP respondents is based on an assumption that one NGEP is a party to each covered agreement.

Estimated Number of Respondents

OCC: 25 IDI; 337 NGEP.
Board: 13 IDI; 78 NGEP.
FDIC: 13 IDI; 36 NGEP.
OTS: 24 IDI; 120 NGEP.

Estimated Number of Responses

OCC: 2,813.
Board: 637.
FDIC: 316.
OTS: 984.

Estimated Annual Burden Hours

OCC: 3,899 hours.
Board: 910 hours.
FDIC: 501.6 hours.
OTS: 1,416 hours.

Frequency of Response

On occasion.

All comments will become a matter of public record. Comments are invited on:

(a) Whether the collection is necessary for the proper performance of the functions of the Agency, including whether the information has practical utility;

(b) The accuracy of the Agency's estimate of the burden of the collection of information;

(c) Ways to enhance the quality, utility, and clarity of the information to be collected;

(d) Ways to minimize the burden of the collection on respondents, including through the use of automated collection techniques or other forms of information technology; and

(e) Estimates of capital or startup costs and costs of operation, maintenance, and purchase of services to provide information.

Dated: December 8, 2003.

Mark J. Tenhundfeld,

Assistant Director, Legislative and Regulatory Activities Division, Office of the Comptroller of the Currency.

By order of the Board of Governors of the Federal Reserve System December 18, 2003.

Jennifer J. Johnson,

Secretary of the Board.

Dated in Washington, DC, this 15th day of December, 2003. Federal Deposit Insurance Corporation.

Robert E. Feldman,

Executive Secretary.

Dated: December 17, 2003.

By the Office of Thrift Supervision.

Richard M. Riccobono,

Deputy Director.

[FR Doc. 03–32118 Filed 12–30–03; 8:45 am]

BILLING CODE 4810–33–P; 6210–01–P; 6714–01–P; 6720–01–P

DEPARTMENT OF THE TREASURY

Fiscal Service

Surety Companies Acceptable on Federal Bonds: American Southern Insurance Company

AGENCY: Financial Management Service, Fiscal Service, Department of the Treasury.

ACTION: Notice.

SUMMARY: This is supplement No. 5 to the Treasury Department Circular 570; 2003 Revision, published July 1, 2003 at 68 FR 39186.

FOR FURTHER INFORMATION CONTACT: Surety Bond Branch at (202) 874–6765.

SUPPLEMENTARY INFORMATION: A Certificate of Authority as an acceptable surety on Federal bonds is hereby issued to the following Company under 31 U.S.C. 9304 to 9308. Federal bond-approving officers should annotate their reference copies of the Treasury Circular 570, 2003 Revision, on page 39191 to reflect this addition: American Southern Insurance Company. Business Address: P.O. Box 723030, Atlanta, Georgia 31139–0030. Phone: (404) 266–9599. Underwriting Limitation b/:$3,274,000. Surety Licenses c/:AL, AR, FL, GA, IL, KS, KY, MD, MS, NE, NC, OH, PA, SC, TN, UT, WA, WV, WY. Incorporated in: Kansas.

Certificates of Authority expire on June 30 each year, unless revoked prior to that date. The Certificates are subject to subsequent annual renewal as long as the companies remain qualified (31 CFR part 223). A list of qualified companies is published annually as of July 1 in Treasury Department Circular 570, with details as to underwriting limitations, areas in which licensed to transact surety business and other information.

The Circular may be viewed and downloaded through the Internet at *http://www.fms.treas.gov/c570.* A hard copy may be purchased from the Government Printing Office (GPO) Subscription Service, Washington, DC, Telephone (202) 512–1800. When ordering the Circular from GPO, use the following stock number: 769–004–04643–2.

Questions concerning this Notice may be directed to the U.S. department of the Treasury, Financial Management Service, Financial Accounting and Services Division surety Bond Branch, 3700 East-West Highway, Room 6A04, Hyattsville, MD 20782.

Dated: December 18, 2003.

Wanda J. Rogers,

Director, Financial Accounting and Services Division, Financial Management Service.

[FR Doc. 03–32189 Filed 12–30–03; 8:45 am]

BILLING CODE 4810–35–M

DEPARTMENT OF THE TREASURY

Office of Thrift Supervision

Proposed Agency Information Collection Activities; Comment Request—Securities Offering Disclosure

AGENCY: Office of Thrift Supervision (OTS), Treasury.

ACTION: Notice and request for comment.

SUMMARY: The Department of the Treasury, as part of its continuing effort to reduce paperwork and respondent burden, invites the general public and other Federal agencies to comment on proposed and continuing information collections, as required by the Paperwork Reduction Act of 1995, 44 U.S.C. 3507. The Office of Thrift Supervision within the Department of the Treasury will submit the proposed information collection requirement described below to the Office of Management and Budget (OMB) for review, as required by the Paperwork Reduction Act. Today, OTS is soliciting public comments on the proposal.

DATES: Submit written comments on or before March 1, 2004.

ADDRESSES: Send comments, referring to the collection by title of the proposal or by OMB approval number, to Information Collection Comments, Chief Counsel's Office, Office of Thrift Supervision, 1700 G Street, NW., Washington, DC 20552; send a facsimile transmission to (202) 906–6518; or send an e-mail to *infocollection.comments@ots.treas.gov.* OTS will post comments and the related index on the OTS Internet Site at *www.ots.treas.gov.* In addition, interested persons may inspect comments at the Public Reading Room, 1700 G Street, NW., by appointment. To make an appointment, call (202) 906–5922, send an e-mail to *publicinfo@ots.treas.gov,* or send a facsimile transmission to (202) 906–7755.

FOR FURTHER INFORMATION CONTACT: You can request additional information about this proposed information collection from Gary Jeffers, Senior Attorney, Business Transactions Division, Office of Chief Counsel, (202) 906–6457, Office of Thrift Supervision, 1700 G Street, NW., Washington, DC 20552.

SUPPLEMENTARY INFORMATION: OTS may not conduct or sponsor an information collection, and respondents are not required to respond to an information collection, unless the information collection displays a currently valid OMB control number. As part of the approval process, we invite comments on the following information collection.

Comments should address one or more of the following points:

a. Whether the proposed collection of information is necessary for the proper performance of the functions of OTS;

b. The accuracy of OTS's estimate of the burden of the proposed information collection;

c. Ways to enhance the quality, utility, and clarity of the information to be collected;

d. Ways to minimize the burden of the information collection on respondents, including through the use information technology.

We will summarize the comments that we receive and include them in the OTS request for OMB approval. All comments will become a matter of public record. In this notice, OTS is soliciting comments concerning the following information collection.

Title of Proposal: Securities Offering Disclosure.

OMB Number: 1550–0035.

Form Number: SEC Forms S–1, S–2, S–3, S–4, S–8, SB–1, and SB–2, and OTS Forms PS, OC and G–12.

Regulation requirement: 12 CFR Part 563g.

Description: OTS collects information for disclosure in securities offerings by savings associations related directly to U.S. Securities and Exchange Commission requirements for offering of information to potential securities purchasers.

Type of Review: Renewal.

Affected Public: Savings Associations.

Estimated Number of Respondents: 8.

Estimated Frequency of Response: On occasion.

Estimated Burden Hours per Response: 335 hours.

Estimated Total Burden: 5,699 hours.

Clearance Officer: Marilyn K. Burton, (202) 906–6467, Office of Thrift Supervision, 1700 G Street, NW., Washington, DC 20552.

OMB Reviewer: Joseph F. Lackey, Jr., (202) 395–7316, Office of Management and Budget, Room 10235, New Executive Office Building, Washington, DC 20503.

Dated: December 23, 2003.

By the Office of Thrift Supervision.

Richard M. Riccobono,

Deputy Director.

[FR Doc. 03–32185 Filed 12–30–03; 8:45 am]

BILLING CODE 6720–01–P

DEPARTMENT OF THE TREASURY

Office of Thrift Supervision

Proposed Agency Information Collection Activities; Comment Request—General Reporting and Recordkeeping by Savings Associations

AGENCY: Office of Thrift Supervision (OTS), Treasury.

ACTION: Notice and request for comment.

SUMMARY: The Department of the Treasury, as part of its continuing effort to reduce paperwork and respondent burden, invites the general public and other Federal agencies to comment on proposed and continuing information collections, as required by the Paperwork Reduction Act of 1995, 44 U.S.C. 3507. The Office of Thrift Supervision within the Department of the Treasury will submit the proposed information collection requirement described below to the Office of Management and Budget (OMB) for review, as required by the Paperwork Reduction Act. Today, OTS is soliciting public comments on the proposal.

DATES: Submit written comments on or before March 1, 2004.

ADDRESSES: Send comments, referring to the collection by title of the proposal or by OMB approval number, to Information Collection Comments, Chief Counsel's Office, Office of Thrift Supervision, 1700 G Street, NW., Washington, DC 20552; send a facsimile transmission to (202) 906–6518; or send an e-mail to *infocollection.comments@ots.treas.gov.* OTS will post comments and the related index on the OTS Internet Site at *www.ots.treas.gov.* In addition, interested persons may inspect comments at the Public Reading Room, 1700 G Street, NW., by appointment. To make an appointment, call (202) 906–5922, send an e-mail to *publicinfo@ots.treas.gov,* or send a facsimile transmission to (202) 906–7755.

FOR FURTHER INFORMATION CONTACT: You can request additional information about this proposed information collection from Josephine Battle, Supervision Policy, (202) 906–6870, Office of Thrift Supervision, 1700 G Street, NW., Washington, DC 20552.

SUPPLEMENTARY INFORMATION: OTS may not conduct or sponsor an information collection, and respondents are not required to respond to an information collection, unless the information collection displays a currently valid OMB control number. As part of the approval process, we invite comments on the following information collection.

Comments should address one or more of the following points:

a. Whether the proposed collection of information is necessary for the proper performance of the functions of OTS;

b. The accuracy of OTS's estimate of the burden of the proposed information collection;

c. Ways to enhance the quality, utility, and clarity of the information to be collected;

d. Ways to minimize the burden of the information collection on respondents, including through the use of information technology.

We will summarize the comments that we receive and include them in the OTS request for OMB approval. All comments will become a matter of public record. In this notice, OTS is soliciting comments concerning the following information collection.

Title of Proposal: General Reporting and Recordkeeping by Savings Associations.

OMB Number: 1550–0011.

Form Number: N/A.

Regulation requirements: 12 CFR 544.8, 545.96(c), 552.11, 562.1, 562.4, 563.1(b), 563.47(e), 563.76(c), and 584.1(f).

Description: This collection of information allows management of savings associations to exercise prudent controls and to provide OTS with a means of determining the integrity of savings association records and operations when examining for safety, soundness, and regulatory compliance.

Type of Review: Renewal.

Affected Public: Savings Associations.

Estimated Number of Respondents: 941.

Estimated Number of Responses: 941.

Estimated Frequency of Response: On occasion.

Estimated Burden Hours per Response: 3,369.

Estimated Total Burden: 3,170,229.

Clearance Officer: Marilyn K. Burton, (202) 906–6467, Office of Thrift Supervision, 1700 G Street, NW., Washington, DC 20552.

OMB Reviewer: Joseph F. Lackey, Jr., (202) 395–7316, Office of Management and Budget, Room 10235, New Executive Office Building, Washington, DC 20503.

Dated: December 23, 2003.

By the Office of Thrift Supervision.

Richard M. Riccobono,

Deputy Director.

[FR Doc. 03–32186 Filed 12–30–03; 8:45 am]

BILLING CODE 6720–01–P

Federal Register

Wednesday,
December 31, 2003

Part II

Department of Transportation

Research and Special Programs Administration

49 CFR Parts 171, 172, et al.

Hazardous Materials: Matter Incorporated by Reference; Final Rule

DEPARTMENT OF TRANSPORTATION

Research and Special Programs Administration

49 CFR Parts 171, 172, 173, 174, 175, 176, 177, 178, 179, and 180

[Docket No. RSPA–03–15574 (HM–189U)]

RIN 2137–AD83

Hazardous Materials: Matter Incorporated by Reference

AGENCY: Research and Special Programs Administration (RSPA), DOT.

ACTION: Final rule.

SUMMARY: This final rule amends the Hazardous Materials Regulations (HMR) to standardize the format used to cross-reference consensus standards published by nationally and internationally recognized standard-setting organizations and industry that are incorporated by reference into the HMR. In addition, this rule adds missing cross-references and removes unnecessary cross-references in the HMR. The amendments contained in this rule are minor editorial changes and impose no new requirements.

DATES: *Effective date:* January 1, 2004.

Incorporation by Reference Date: The incorporation by reference of the publications listed in this final rule has been approved by the Director of the Federal Register as of January 1, 2004.

FOR FURTHER INFORMATION CONTACT: Eileen Edmonson, Office of Hazardous Materials Standards, (202) 366–8553, Research and Special Programs Administration, U.S. Department of Transportation, 400 Seventh Street, SW., Washington, DC 20590–0001.

SUPPLEMENTARY INFORMATION:

I. Background

The Research and Special Programs Administration (RSPA, we, us) references certain consensus standards, specifications, and recommended practices developed by nationally and internationally recognized standard-setting organizations and the hazardous materials industry to establish certain requirements in the Hazardous Materials Regulations (HMR; 49 CFR Parts 171–180). This practice, known as incorporation by reference, allows us to incorporate the provisions of widely accepted technical standards into the regulations and to reduce the volume of material published in the **Federal Register**. The legal effect of incorporation by reference is that the referenced provisions are treated as if they were published in the **Federal Register** and in the HMR. As with any other requirements appearing in regulations, the incorporated provisions have the force and effect of law.

The Office of the Federal Register's (OFR's) regulations, at 1 CFR Part 51, govern how RSPA and other Federal agencies may incorporate various documents by reference. These regulations require agencies to obtain approval from the Director of the Federal Register for each publication incorporated by reference. Incorporation by reference of a publication is limited to the specific edition approved by the OFR. In the HMR, § 171.7 contains a complete listing of the source and name of each publication approved by the OFR regulations.

The OFR requires an agency to use the words ''incorporated by reference'' in the language incorporating a publication. The HMR incorporate by reference more than 100 publications and contain hundreds of references to these publications. For conciseness, we are using the wording ''IBR, see § 171.7 of this subchapter'' in the language incorporating a publication. This wording appears the first time a publication is referenced in a particular section. Some sections in the HMR currently contain multiple references to the same publication. These repeated references when they appear in the same section are being removed in this final rule.

In an earlier final rule (RSPA Docket No. 02–13658 (HM–215E), 68 FR 1013, January 8, 2003), we revised § 171.7 to incorporate by reference the 2002 edition of International Maritime Dangerous Goods Code (IMDG Code), including Amendment 31. We also authorized the continued use of the 2000 edition of the IMDG Code, including Amendment 30, until January 1, 2004. We are removing the reference to the 2000 edition of the IMDG Code in this final rule.

The rule also contains minor editorial corrections (*e.g.,* incomplete section references, and typographical and punctuation errors), and certain other minor adjustments to enhance the clarity of the HMR.

Because these amendments impose no new requirements, notice and public comment procedures are unnecessary. In addition, making these amendments effective without the customary 30-day delay following publication will allow the changes to appear in the next revision of 49 CFR.

II. Rulemaking Analyses and Notices

A. Executive Order 12866 and DOT Regulatory Policies and Procedures

This final rule is not considered a significant regulatory action under section 3(f) of Executive Order 12866 and, therefore, was not reviewed by the Office of Management and Budget. This rule is not significant under the Regulatory Policies and Procedures of the Department of Transportation (44 FR 11034). Because of the minimal economic impact of this rule, preparation of a regulatory impact analysis or a regulatory evaluation is not warranted.

B. Executive Order 13132

This final rule has been analyzed in accordance with the principles and criteria in Executive Order 13132 (''Federalism''). This final rule does not propose any regulation that: (1) Has substantial direct effects on the States, the relationship between the national government and the States, or the distribution of power and responsibilities among the various levels of government; (2) imposes substantial direct compliance costs on State and local governments; or (3) preempts State law.

RSPA is not aware of any State, local, or Indian tribe requirements that would be preempted by correcting editorial errors and making minor regulatory changes. This final rule does not have sufficient federalism impacts to warrant the preparation of a federalism assessment.

C. Executive Order 13175

This rule has been analyzed in accordance with the principles and criteria contained in Executive Order 13175 (''Consultation and Coordination with Indian Tribal Governments''). Because this rule does not have tribal implications and does not impose substantial direct compliance costs, the funding and consultation requirements of Executive Order 13175 do not apply.

D. Regulatory Flexibility Act

I certify that this final rule will not have a significant economic impact on a substantial number of small entities. This rule makes minor editorial changes that will not impose any new requirements on persons subject to the HMR; thus, there are no direct or indirect adverse economic impacts for small units of government, businesses or other organizations.

E. Unfunded Mandates Reform Act of 1995

This rule does not impose unfunded mandates under the Unfunded Mandates Reform Act of 1995. It does not result in costs of $100 million or more to either State, local, or tribal governments, in the aggregate, or to the private sector, and is the least burdensome alternative that achieves the objective of the rule.

F. Paperwork Reduction Act

There are no new information collection requirements in this final rule.

G. Regulation Identifier Number (RIN)

A regulation identifier number (RIN) is assigned to each regulatory action listed in the Unified Agenda of Federal Regulations. The Regulatory Information Service Center publishes the Unified Agenda in April and October of each year. The RIN number contained in the heading of this document can be used to cross-reference this action with the Unified Agenda.

List of Subjects

49 CFR Part 171

Exports, Hazardous materials transportation, Hazardous waste, Imports, Incorporation by reference, Reporting and recordkeeping requirements.

49 CFR Part 172

Education, Hazardous materials transportation, Hazardous waste, Incorporation by reference, Labeling, Markings, Packaging and containers, Reporting and recordkeeping requirements.

49 CFR Part 173

Hazardous materials transportation, Incorporation by reference, Packaging and containers, Radioactive materials, Reporting and recordkeeping requirements, Uranium.

49 CFR Part 174

Hazardous materials transportation, Incorporation by reference, Radioactive materials, Railroad safety.

49 CFR Part 175

Air carriers, Hazardous materials transportation, Incorporation by reference, Radioactive materials, Reporting and recordkeeping requirements.

49 CFR Part 176

Hazardous materials transportation, Incorporation by reference, Maritime carriers, Radioactive materials, Reporting and recordkeeping requirements.

49 CFR Part 177

Hazardous materials transportation, Incorporation by reference, Motor carriers, Radioactive materials, Reporting and recordkeeping requirements.

49 CFR Part 178

Hazardous materials transportation, Incorporation by reference, Motor vehicle safety, Packaging and containers, Reporting and recordkeeping requirements.

49 CFR Part 179

Hazardous materials transportation, Incorporation by reference, Railroad safety, Reporting and recordkeeping requirements.

49 CFR Part 180

Hazardous materials transportation, Incorporation by reference, Motor vehicle safety, Packaging and containers, Reporting and recordkeeping requirements.

■ In consideration of the foregoing, 49 CFR Chapter I is amended as follows:

PART 171—GENERAL INFORMATION, REGULATIONS, AND DEFINITIONS

■ 1. The authority citation for part 171 continues to read as follows:

Authority: 49 U.S.C. 5101–5127; 49 CFR 1.53.

§ 171.7 [Amended]

■ 2. In § 171.7, the table in paragraph (a)(3) is revised and the table in paragraph (b) is amended by adding an entry in the appropriate alphabetical order to read as follows:

§ 171.7 Referenced material.

(a) * * *

(3) *Table of material incorporated by reference.* * * *

Source and name of material	49 CFR reference
Air Transport Association of America, 1301 Pennsylvania Avenue, N.W., Washington, DC 20004–1707:	
ATA Specification No. 300 Packaging of Airline Supplies, Revision 19, July 31, 1996.	172.102.
The Aluminum Association, 420 Lexington Avenue, New York, NY 10017:	
Aluminum Standards and Data, Seventh Edition, June 1982	172.102; 178.65.
American National Standards Institute, Inc., 25 West 43rd Street, New York, NY 10036:	
ANSI/ASHRAE 15–94, Safety Code for Mechanical Refrigeration ..	173.306; 173.307.
ANSI B16.5–77, Steel Pipe Flanges, Flanged Fittings	178.360–4.
ANSI N14.1 Uranium Hexafluoride—Packaging for Transport, 1971, 1982, 1987, 1990, 1995 and 2001 Editions.	173.417; 173.420.
American Petroleum Institute, 1220 L Street, NW, Washington, D.C. 20005–4070:	
API Recommended Practice Closures of Underground Petroleum Storage Tanks, 3rd Edition, March 1996.	1604172.102.
American Pyrotechnics Association (APA), P.O. Box 213, Chestertown, MD 21620:	
APA Standard 87–1, Standard for Construction and Approval for Transportation of Fireworks, Novelties, and Theatrical Pyrotechnics, December 1, 2001 version.	173.56.
American Society of Mechanical Engineers, ASME International, 22 Law Drive, P.O. Box 2900, Fairfield, NJ 07007–2900:	

Source and name of material	49 CFR reference
ASME Code, Sections II (Parts A and B), V, VIII (Division 1), and IX of 1998 Edition of American Society of Mechanical Engineers Boiler and Pressure Vessel Code.	172.102; 173.24b; 173.32; 173.306; 173.315; 173.318; 173.420; 178.245–1; 178.245–3; 178.245–4; 178.245–6; 178.245–7; 178.255–1; 178.255–2; 178.255–14; 178.255–15; 178.270–2; 178.270–3; 178.270–7; 178.270–9; 178.270–11; 178.270–12; 178.271–1; 178.272–1; 178.273; 178.274; 178.276; 178.277; 178.320; 178.337–1; 178.337–2; 178.337–3; 178.337–4; 178.337–6; 178.337–16; 178.337–18; 178.338–1; 178.338–2; 178.338–3; 178.338–4; 178.338–5; 178.338–6; 178.338–13; 178.338–16; 178.338–18; 178.338–19; 178.345–1; 178.345–2; 178.345–3; 178.345–4; 178.345–7; 178.345–14; 178.345–15; 178.346–1; 178.347–1; 178.348–1; 179.400–3; 180.407.
American Society for Testing and Materials, 100 Barr Harbor Drive, West Conshohocken, PA 19428:	
Noncurrent ASTM Standards are available from: Engineering Societies Library, 354 East 47th Street, New York, NY 10017	
ASTM A 20/A 20M–93a Standard Specification for General Requirements for Steel Plates for Pressure Vessels.	178.337–2; 179.102–4; 179.102–1; 179.102–17.
ASTM A 47–68 Malleable Iron Castings	179.200–15.
ASTM A 240/A 240M–99b Standard Specification for Heat-Resisting Chromium and Chromium-Nickel Stainless Steel Plate, Sheet and Strip for Pressure Vessels.	178.57; 178.358–5; 179.100–7; 179.100–10; 179.102–1; 179.102–4; 179.102–17; 179.200–7; 179.201–5; 179.220–7; 179.300–7; 179.400–5.
ASTM A 242–81 Standard Specification for High-Strength Low-Alloy Structural Steel.	178.338–2.
ASTM A 262–93a Standard Practices for Detecting Susceptibility to Intergranular Attack in Austenitic Stainless Steels.	179.100–7; 179.200–7; 179.201–4.
ASTM A 285–78 Pressure Vessel Plates, Carbon Steel, Low- and Intermediate-Tensile Strength.	179.300–7.
ASTM A 300–58 Steel Plates for Pressure Vessels for Service at Low Temperatures.	178.337–2.
ASTM A 302/A 302M–93 Standard Specification for Pressure Vessel Plates, Alloy Steel, Manganese-Molybdenum and Manganese-Molybdenum Nickel.	179.100–7; 179.200–7; 179.220–7.
ASTM A 333–67 Seamless and Welded Steel Pipe for Low-Temperature Service.	178.45.
ASTM A 370–94 Standard Test 179.102–1; 179.102–4; Methods and Definitions for Mechanical Testing of Steel Products.	179.102–17.
ASTM A 441–81 Standard Specification for High-Strength Low-Alloy Structural Manganese Vanadium Steel.	178.338–2.
ASTM A 514–81 Standard Specification for High-Yield Strength Quenched and Tempered Alloy Steel Plate, Suitable for Welding.	178.338–2.
ASTM A 515/A 515M–03 Standard Specification for Pressure Vessel Plates, Carbon Steel, for Intermediate- and Higher-Temperature Service.	179.300–7.
ASTM A 516/A 516M–90 Standard Specification for Pressure Vessel Plates, Carbon Steel, for Moderate and Lower-Temperature Service.	178.337–2; 179.100–7; 179.102–1; 179.102–2; 179.102–4; 179.102–17; 179.200–7; 179.220–7; 179.300–7.
ASTM A 537/A 537M–91 Standard Specification for Pressure Vessel Plates, Heat-Treated, Carbon-Manganese-Silicon Steel.	179.100–7; 179.102–4; 179.102–17.
ASTM A 572–82 Standard Specification for High-Strength Low-Alloy Columbian-Vanadium Steels of Structural Quality.	178.338–2.
ASTM A 588–81 Standard Specification for High-Strength Low-Alloy Structural Steel with 50 Ksi Minimum Yield Point to 4 in. Thick.	178.338–2.
ASTM A 606–75 Standard Specification for Steel Sheet and Strip Hot- Rolled and Cold-Rolled, High-Strength, Low-Alloy, with Improved Atmospheric Corrosion Resistance, 1975 (Reapproved 1981).	178.338–2.
ASTM A 607–98 Standard Specification for Steel, Sheet and Strip, High-Strength, Low-Alloy, Columbium or Vanadium, or Both, Hot-Rolled and Cold-Rolled.	178.338–2.
ASTM A 612–72a High Strength Steel Plates for Pressure Vessels for Moderate and Lower Temperature Service.	178.337–2.
ASTM A 633–79a Standard Specification for Normalized High-Strength Low-Alloy Structural Steel, 1979 Edition.	178.338–2.
ASTM A 715–81 Standard Specification for Steel Sheet and Strip, Hot-Rolled, High-Strength, Low-Alloy with Improved Formability, 1981.	178.338–2.
ASTM B 162–93a Standard Specification for Nickel Plate, Sheet, and Strip.	173.249; 179.200–7.
ASTM B 209–93 Standard Specification for Aluminum and Aluminum-Alloy Sheet and Plate.	179.100–7; 179.200–7; 179.220–7.
ASTM B 221–76 Aluminum Alloy Extruded Bars, Rods, Shapes, and Tubes.	178.46.

Source and name of material	49 CFR reference
ASTM B 557–84 Tension Testing Wrought and Cast Aluminum and Magnesium-Alloy Products.	178.46.
ASTM B 580–79 Standard Specification for Anodic Oxide Coatings on Aluminum, (Re-approved 2000).	173.316; 173.318; 178.338–17.
ASTM D 1238–90b Standard Test Method for Flow Rates of Thermoplastics for Extrusion Plastometer.	173.225.
ASTM D 1709–01 Standard Text Methods for Impact Resistance of Plastic Film by the Free-Falling Dart Method.	173.197.
ASTM D 1835–97 Standard Specification for Liquefied Petroleum (LP) Gases.	180.209.
ASTM D 1838–64 Copper Strip Corrosion by Liquefied Petroleum (LP) Gases.	173.315.
ASTM D 1922–00a Standard Test Method for Propogation Tear Resistance of Plastic Film and Thin Sheeting by Pendulum Method.	173.197.
ASTM D 4206–96 Standard Test Method for Sustained Burning of Liquid Mixtures Using the Small Scale Open-Cup Apparatus.	173.120.
ASTM D 4359–90 Standard Test Method for Determining Whether a Material is a Liquid or a Solid.	171.8.
ASTM E 8–99 Standard Test Methods for Tension Testing of Metallic Materials.	178.36; 178.37; 178.38; 178.39; 178.44; 178.45; 178.50; 178.51; 178.53; 178.55; 178.56; 178.57; 178.58; 178.59; 178.60; 178.61; 178.68.
ASTM E 23–98 Standard Test Methods for Notched Bar Impact Testing of Metallic Materials.	178.57.
ASTM E 112–88 Standard Test Methods for Determining Average Grain Size.	178.44.
ASTM E 112–96 Standard Test Methods for Determining Average Grain Size, 1996 Edition.	178.274; Part 178, appendix A.
ASTM E 114–95 Standard Practice for Ultrasonic Pulse-Echo Straight-Beam Examination by the Contact Method.	178.45.
ASTM E 213–98 Standard Practice for Ultrasonic Examination of Metal Pipe and Tubing.	178.45.
American Water Works Association, 1010 Vermont Avenue, N.W., Suite 810, Washington, DC 20005:	
AWWA Standard C207–55, Steel Pipe Flanges, 1955	178.360–4.
American Welding Society, 550 N.W. Le Jeune Road, Miami, Florida 33126:	
AWS Code B 3.0; Standard Qualification Procedure; 1972 (FRB 3.0–41, rev. May 1973).	178.356–2, 178.358–2.
AWS Code D 1.0; Code for Welding in Building Construction (FR D 1.0–66, 1966).	178.356–2; 178.358–2.
Association of American Railroads, American Railroads Building, 50 F Street, NW., Washington, DC 20001:	
AAR Manual of Standards and Recommended Practices, Section C—Part III, Specifications for Tank Cars, Specification M–1002, (AAR Specifications for Tank Cars), December 2000.	173.31; 174.63; 179.6; 179.7; 179.15; 179.16; 179.20; 179.22; 179.100–9; 179.100–10; 179.100–12; 179.100–13; 179.100–14; 179.100–18; 179.101–1; 179.102–1; 179.102–4; 179.102–17; 179.103–5; 179.200–7; 179.200–9; 179.200–10; 179.200–11; 179.200–13; 179.200–17; 179.200–22; 179.201–6; 179.220–6; 179.220–7; 179.220–10; 179.220–11; 179.220–14; 179.220–18; 179.220–26; 179.300–9; 179.300–10; 179.300–15; 179.300–17; 179.400–5; 179.400–6; 179.400–8; 179.400–11; 179.400–12; 179.400–15; 179.400–18; 179.400–20; 179.400–25; 180.509; 180.513; 180.515; 180.517.
AAR Manual of Standards and Recommended Practices, Section I, Specially Equipped Freight Car and Intermodal Equipment, 1988.	174.55; 174.63.
AAR Specifications for Design, Fabrication and Construction of Freight Cars, Volume 1, 1988.	179.16.
Chlorine Institute, Inc., 2001 L Street, NW., Suite 506, Washington, DC 20036:	
Chlorine Institute Emergency Kit ''A'' for 100-lb. & 150-lb. Chlorine Cylinders (with the exception of repair method using Device 8 for side leaks), Edition 9, June 2000.	173.3.
Chlorine Institute Emergency Kit ''B'' for Chlorine Ton Containers (with the exception of repair method using Device 9 for side leaks) Edition 8, June 1996.	173.3.
Type 1½ JQ 225, Dwg., H51970, Revision D, April 5, 1989; or Type 1½ JQ 225, Dwg. H50155, Revision F, April 4, 1989.	173.315.
Section 3, Pamphlet 57, Emergency Shut-Off Systems for Bulk Transfer of Chlorine, 3rd Edition, October 1997.	177.840.
Standard Chlorine Angle Valve Assembly, Dwg. 104–8, July 1993	178.337–9.
Excess Flow Valve with Removable Seat, Dwg. 101–7, July 1993	178.337–8.
Excess Flow Valve with Removable Basket, Dwg. 106–6, July 1993.	178.337–8.

Source and name of material	49 CFR reference
Standards for Housing and Manway Covers for Steel Cargo Tanks, Dwgs. 137–1 and 137–2, September 1, 1982.	178.337–10.
Compressed Gas Association, Inc., 4221 Walney Road, 5th Floor, Chantilly, Virginia 20151:	
CGA Pamphlet C–3, Standards for Welding on Thin-Walled Steel Cylinders, 1994.	178.47; 178.50; 178.51; 178.53; 178.55; 178.56; 178.57; 178.58; 178.59; 178.60; 178.61; 178.65; 178.68; 180.211.
CGA Pamphlet C–5, Cylinder Service Life—Seamless Steel High Pressure Cylinders, 1991.	173.302a.
CGA Pamphlet C–6, Standards for Visual Inspection of Steel Compressed Gas Cylinders, 1993.	173.198; 180.205; 180.209; 180.211; 180.411; 180.519.
CGA Pamphlet C–6.1, Standards for Visual Inspection of High Pressure Aluminum Compressed Gas Cylinders, 1995.	180.205; 180.209.
CGA Pamphlet C–6.2, Guidelines for Visual Inspection and Requalification of Fiber Reinforced High Pressure Cylinders, 1996, Third Edition.	180.205.
CGA Pamphlet C–6.3, Guidelines for Visual Inspection and Requalification of Low Pressure Aluminum Compressed Gas Cylinders, 1991.	180.205; 180.209.
CGA Pamphlet C–7, A Guide for the Preparation of Precautionary Markings for Compressed Gas Containers, appendix A, issued 1992 (6th Edition).	172.400a.
CGA Pamphlet C–8, Standard for Requalification of DOT–3HT Cylinder Design, 1985.	180.205; 180.209.
CGA Pamphlet C–11, Recommended Practices for Inspection of Compressed Gas Cylinders at Time of Manufacture, 2001, Third Edition.	178.35.
CGA Pamphlet C–12, Qualification Procedure for Acetylene Cylinder Design, 1994.	173.301; 173.303; 178.59; 178.60.
CGA Pamphlet C–13, Guidelines for Periodic Visual Inspection and Requalification of Acetylene Cylinders, 2000, Fourth Edition.	173.303; 180.205; 180.209.
CGA Pamphlet C–14, Procedures for Fire Testing of DOT Cylinder Pressure Relief Device Systems, 1979.	173.301; 173.323.
CGA Pamphlet G–2.2 Tentative Standard Method for Determining Minimum of 0.2% Water in Anhydrous Ammonia, 1985.	173.315.
CGA Pamphlet G–4.1, Cleaning Equipment for Oxygen Service, 1985.	178.338–15.
CGA Pamphlet P–20, Standard for the Classification of Toxic Gas Mixtures, 1995.	173.115.
CGA Pamphlet S–1.1, Pressure Relief Device Standards—Part 1—Cylinders for Compressed Gases, 2001 (with the exception of paragraph 9.1.1.1), Ninth Edition.	173.301; 173.304a.
CGA Pamphlet S–1.2, Safety Relief Device Standards Part 2—Cargo and Portable Tanks for Compressed Gases, 1980.	173.315; 173.318; 178.276; 178.277.
CGA Pamphlet S–7, Method for Selecting Pressure Relief Devices for Compressed Gas Mixtures in Cylinders, 1996.	173.301.
CGA Technical Bulletin TB–2, Guidelines for Inspection and Repair of MC–330 and MC–331 Cargo Tanks, 1980.	180.407; 180.413.
Department of Defense (DOD), 2461 Eisenhower Avenue, Alexandria, VA 22331:	
DOD TB 700–2; NAVSEAINST 8020.8B; AFTO 11A–1–47; DLAR 8220.1: Explosives Hazard Classification Procedures, January 1998.	173.56.
Department of Energy (USDOE), 100 Independence Avenue SW., Washington, DC 20545:	
USDOE publications available from: Superintendent of Documents, Government Printing Office (GPO) or The National Technical Information Service (NTIS).	
USDOE, CAPE–1662, Revision 1, and Supplement 1, Civilian Application Program Engineering Drawings, April 6, 1988.	178.356–1; 178.356–2; 178.358–1; 178.358–2; 178.358–3; 178.358–4.
USDOE, Material and Equipment Specification No. SP–9, Rev. 1, and Supplement—Fire Resistant Phenolic Foam, March 28, 1968.	178.356–2; 178.358–2.
USDOE, ORO 651—Uranium Hexafloride; A Manual of Good Practices, Revision 6, 1991 edition.	173.417.
USDOE, KSS–471, November 30, 1986—Proposal for Modifications to U.S. Department of Transportation Specification 21PF–1, Fire and Shock Resistant Phenolic Foam—Insulated Metal Overpack.	178.358–1; 178.358–3.
General Services Administration, Specification Office, Room 6662, 7th and D Street, S.W., Washington, DC 20407:	
Federal Specification RR–C–901C, Cylinders, Compressed Gas: High Pressure Steel DOT 3AA, and Aluminum Applications, January 15, 1981 (Superseding RR–C–901B, August 1, 1967).	173.302; 173.336; 173.337.

Source and name of material	49 CFR reference
Institute of Makers of Explosives, 1120 19th Street NW., Suite 310, Washington, DC 20036–3605:	
IME Safety Library Publication No. 22 (IME Standard 22), Recommendation for the Safe Transportation of Detonators in a Vehicle with Certain Other Explosive Materials, May 1993.	173.63; 177.835.
International Atomic Energy Agency (IAEA), P.O. Box 100, Wagramer Strasse 5, A–1400 Vienna, Austria:	
Also available from: Bernan Associates, 4611–F Assembly Drive, Lanham, MD 20706–4391, USA; or Renouf Publishing Company, Ltd., 812 Proctor Avenue, Ogdensburg, New York 13669, USA.	
IAEA, Regulations for the Safe Transport of Radioactive Material, No. TS–R–1, 1996 Edition (Revised), (ST–1, Revised).	171.12.
IAEA, Regulations for the Safe Transport of Radioactive Material, Safety Series No. 6, 1985 Edition (as Amended 1990).	171.12; 173.415; 173.416; 173.417; 173.473.
International Civil Aviation Organization (ICAO), P.O. Box 400, Place de l'Aviation Internationale, 1000 Sherbrooke Street West, Montreal, Quebec, Canada H3A 2R2:	
ICAO Technical Instructions available from: INTEREG, International Regulations, Publishing and Distribution Organization, P.O. Box 60105, Chicago, IL 60660.	
Technical Instructions for the Safe Transport of Dangerous Goods by Air (ICAO Technical Instructions), DOC 9284–AN/905, 2003–2004 Edition, including Erratum.	171.8; 171.11; 172.202; 172.401; 172.512; 172.602; 173.320; 175.33; 178.3.
International Maritime Organization (IMO), 4 Albert Embankment, London, SE17SR, United Kingdom or New York Nautical Instrument & Service Corporation, 140 West Broadway, New York, NY 10013:	
International Convention for the Safety of Life at Sea, (SOLAS) Amendments 2000, Chapter II–2/Regulation 19, 2001.	176.63.
International Maritime Dangerous Goods (IMDG) Code, 2002 Edition, including Amendment 31–02 (English Edition).	171.12; 172.202; 172.401; 172.502; 172.602; 173.21; 176.2; 176.5; 176.11; 176.27; 176.30, 178.3.
International Organization for Standardization, Case Postale 56, CH–1211, Geneve 20, Switzerland:	
Also available from: ANSI 25 West 43rd Street, New York, NY 10036	
ISO 82–74(E) Steels Tensile Testing	178.270–3.
ISO 535–1991(E) Paper and board—Determination of water absorptiveness—Cobb method.	178.516; 178.707; 178.708.
ISO 1496–3–1995(E)—Series Freight Containers—Specification and Testing—Part 3: Tank Containers for Liquids, Gases and Pressurized Dry Bulk March 1, 1995, Fourth Edition.	1173.411; 178.274.
ISO 2431–1984(E) Standard Cup Method	173.121.
ISO 2592–1973(E) Petroleum products—Determination of flash and fire points—Cleveland open cup method.	173.120.
ISO 2919–1980(E)—Sealed radioactive sources—Classification	173.469.
ISO 3036–1975(E) Board—Determination of puncture resistance ...	178.708.
ISO 3574–1986(E) Cold-reduced carbon steel sheet of commercial and drawing qualities.	178.503; Part 178, appendix C.
ISO 4126–1 Safety valves—Part 1: General Requirements, December 15, 1991, First Edition.	178.274.
ISO/TR 4826–1979(E)—Sealed radioactive sources—Leak test methods.	173.469.
ISO 6892 Metallic materials—Tensile testing, July 15, 1984, First Edition.	178.274.
ISO 8115 Cotton bales—Dimensions and density, 1986 Edition	172.102.
National Board of Boiler and Pressure Vessel Inspectors, 1055 Crupper Avenue, Columbus, Ohio 43229:	
National Board Inspection Code, A Manual for Boiler and Pressure Vessel Inspectors, NB–23, 1992 Edition.	180.413.
National Fire Protection Association, Batterymarch Park, Quincy, MA 02269:	
NFPA 58-Liquefied Petroleum Gas Code, 2001 Edition	173.315.
National Institute of Standards and Technology, Department of Commerce, 5285 Port Royal Road, Springfield, VA 22151:	
USDC, NBS Handbook H–28 (1957), 1957 Handbook of Screw-Thread Standards for Federal Services, December 1966 Edition.	179.2; 178.45; 178.46.
Organization for Economic Cooperation and Development (OECD), OECD Publications and Information Center, 2001 L Street, N.W., Suite 700, Washington, DC 20036:	
OECD Guideline for Testing of Chemicals, No. 404 ''Acute Dermal Irritation/Corrosion,'' 1992.	173.137.
Transport Canada, TDG Canadian Government Publishing Center, Supply and Services, Canada, Ottawa, Ontario, Canada K1A 059:	

Source and name of material	49 CFR reference
Transportation of Dangerous Goods Regulations (TDG Regulations), 1 July 1985, SOR/85/77, incorporating the following Registration Numbers: SOR/85–314, SOR/85–585, SOR/85–609, SOR/86–526, SOR/87–186, SOR/87–335, SOR/88–635, SOR/89–39, SOR/89–294, SOR/90–847, SOR/91–711, SOR/91–712, SOR/92–447, SOR/92–600, SOR/93–203, SOR/93–274, SOR/93–525, SOR/94–146 and SOR/94–264 (English edition), SOR/95–241, and SOR/95–547.	171.12a; 172.401; 172.502; 172.602.
Truck Trailer Manufacturers Association, 1020 Princess Street, Alexandria, Virginia 22314:	
TTMA RP No. 61–98, Performance of manhole and/or Fill Opening Assemblies on MC 306, DOT 406, Non-ASME MC 312 and Non-ASME DOT 412 Cargo Tanks, June 1, 1998.	180.405.
TTMA RP No. 81–97, Performance of Spring Loaded Pressure Relief Valves on MC 306, MC 307, MC 312, DOT 406, DOT 407, and DOT 412 Tanks, July 1, 1997 Edition.	178.345–10; 178.346–3.
TTMA TB No. 107, Procedure for Testing In-Service Unmarked and/or Uncertified MC 306 and Non-ASME MC 312 Type Cargo Tank Manhole Covers, June 1, 1998 Edition.	180.405.
United Nations, United Nations Sales Section, New York, NY 10017:	
UN Recommendations on the Transport of Dangerous Goods (UN Recommendations), Twelfth Revised Edition (2001).	171.12; 172.202; 172.401; 172.502; 173.22; 173.24; 173.24b; 173.197; Part 173, appendix H; 178.274; 178.801.
UN Recommendations on the Transport of Dangerous Goods, Manual of Tests and Criteria (UN Manual of Tests and Criteria), Third Revised Edition (1999).	172.102; 173.21; 173.56; 173.57; 173.58; 173.124; 173.125; 173.127; 173.128; 173.185.

(b) * * *

Source and name of material	49 CFR reference
* * * * * * *	
American Society for Testing and Materials, 100 Barr Harbor Drive, West Conshohocken, PA 19428:	
Noncurrent ASTM Standards are available from: Engineering Societies Library, 354 East 47th Street, New York, NY 10017	
ASTM E 380–89 Standards for Metric Practice	171.10
* * * * * * *	

* * * * *

■ 3. In § 171.8, the definitions for ''Competent Authority,'' ''Liquid,'' ''Liquid phase,'' ''NPT,'' ''UN Recommendations,'' and ''UN standard packaging'' are revised to add the parenthetical phrase ''(IBR, see § 171.7),'' and a definition for ''Incorporated by reference or IBR'' is added, to read as follows:

§ 171.8 Definitions and abbreviations.

* * * * *

Competent Authority means a national agency responsible under its national law for the control or regulation of a particular aspect of the transportation of hazardous materials (dangerous goods). The term *Appropriate Authority*, as used in the ICAO Technical Instructions (IBR, see § 171.7), has the same meaning as *Competent Authority.* For purposes of this subchapter, the Associate Administrator is the Competent Authority for the United States.

* * * * *

Incorporated by reference or *IBR* means a publication or a portion of a publication that is made a part of the regulations of this subchapter. See § 171.7.

* * * * *

Liquid means a material, other than an elevated temperature material, with a melting point or initial melting point of 20 °C (68 °F) or lower at a standard pressure of 101.3 kPa (14.7 psia). A viscous material for which a specific melting point cannot be determined must be subjected to the procedures specified in ASTM D 4359 ''Standard Test Method for Determining Whether a Material is Liquid or Solid'' (IBR, see § 171.7).

Liquid phase means a material that meets the definition of liquid when evaluated at the higher of the temperature at which it is offered for transportation or at which it is transported, not at the 37.8 °C (100 °F) temperature specified in ASTM D 4359 (IBR, see § 171.7).

* * * * *

NPT means an American Standard taper pipe thread conforming to the requirements of NBS Handbook H–28 (IBR, see § 171.7).

* * * * *

UN Recommendations means the UN Recommendations on the Transport of Dangerous Goods (IBR, see § 171.7).

UN standard packaging means a packaging conforming to standards in the UN Recommendations (IBR, see § 171.7).

* * * * *

■ 4. In § 171.10, paragraph (c)(1) is revised to read as follows:

§ 171.10 Units of measure.

* * * * *

(c) * * *

(1) Conversion values are provided in the following table and are based on values provided in ASTM E 380, ''Standard for Metric Practice''.

* * * * *

§ 171.11 [Amended]

■ 5. In § 171.11, amend the introductory paragraph by removing the parenthetical phrase ''(incorporated by reference, see § 171.7)'' and adding the parenthetical phrase ''(IBR, see § 171.7)'' in its place.

■ 6. In § 171.12, paragraphs (b) introductory text, (d) introductory text, and paragraph (e)(5) are revised to read as follows:

§ 171.12 Import and export shipments.

* * * * *

(b) *IMDG Code*. The IMDG Code (IBR, see § 171.7) sets forth descriptions, classifications, packagings, labeling and vessel stowage requirements. Notwithstanding the provisions of this subchapter, a material that is packaged, marked, classed, labeled, placarded, described, stowed and segregated, and certified (including a container packing certification, if applicable) in accordance with the IMDG Code, and otherwise conforms to the requirements of this section, may be offered and accepted for transportation and transported within the United States. The following conditions and limitations apply:

* * * * *

(d) *Use of International Atomic Energy Agency (IAEA) regulations for Class 7 (radioactive) materials*. Class 7 (radioactive) materials being imported into or exported from the United States, or passing through the United States in the course of being shipped between places outside the United States, may be offered and accepted for transportation when packaged, marked, labeled, and otherwise prepared for shipment in accordance with IAEA ''Regulations for the Safe Transport of Radioactive Material,'' Safety Series No. 6 or TS–R–1 (IBR, see § 171.7), if—

* * * * *

(e) * * *

(5) A label or placard that conforms to the UN Recommendations (IBR, see § 171.7) specifications for a ''Division 2.3'' or ''Division 6.1'' label or placard may be substituted for the POISON GAS or POISON INHALATION HAZARD label or placard required by §§ 172.400(a) and 172.504(e) of this subchapter on a package transported in a closed transport vehicle or freight container. The transport vehicle or freight container must be marked with identification numbers for the material, regardless of the total quantity contained in the transport vehicle or freight container, in the manner specified in § 172.313(c) of this subchapter and placarded as required by subpart F of this subchapter.

* * * * *

■ 7. In § 171.12a, paragraph (b) introductory text is revised to read as follows:

§ 171.12a Canadian shipments and packagings.

* * * * *

(b) *Conditions and limitations*. Notwithstanding the requirements of parts 172, 173, and 178 of this subchapter, and subject to the limitations of paragraph (a) of this section, a hazardous material that is classed, marked, labeled, placarded, described on a shipping paper, and packaged in accordance with the Transportation of Dangerous Goods (TDG) Regulations (IBR, see § 171.7) issued by the Government of Canada may be offered for transportation and transported to or through the United States by motor vehicle or rail car. The following conditions and limitations apply:

* * * * *

PART 172—HAZARDOUS MATERIALS TABLE, SPECIAL PROVISIONS, HAZARDOUS MATERIALS COMMUNICATIONS, EMERGENCY RESPONSE INFORMATION, AND TRAINING REQUIREMENTS

■ 8. The authority citation for part 172 continues to read as follows:

Authority: 49 U.S.C. 5101–5127; 49 CFR 1.53.

PART 172—[AMENDED]

■ 9. In Part 172, amend the following sections by removing the parenthetical phrase ''(see § 171.7 of this subchapter)'' and adding the parenthetical phrase ''(IBR, see § 171.7 of this subchapter)'' in each of the following places:

172.102(c)(1), Special provision 23
172.102(c)(1), Special provision 43
172.102(c)(1), Special provision 57
172.102(c)(1), Special provision 125
172.102(c)(1), Special provision 129
172.102(c)(1), Special provision 142
172.102(c)(7)(viii), Special provision TP6
172.202(e)
172.401(c)(1)
172.401(c)(3)
172.401(c)(4)
172.502(b)(1)
172.512(a)(3)
172.602(a)(1)

■ 10. In § 172.102:

a. In paragraph (c)(1), Special provisions 39, 44, 119, 132, 137, and 144 are revised.

b. In paragraph (c)(2), Special provision A52 is revised.

c. In paragraph (c)(3), Special provisions B13, c., and the text preceding the table in B33 are revised.

The revisions read as follows:

§ 172.102 Special provisions.

* * * * *

(c) * * *

(1) * * *

Code/Special Provisions

* * * * *

39 This substance may be carried under provisions other than those of Class 1 only if it is so packed that the percentage of water will not fall below that stated at any time during transport. When phlegmatized with water and inorganic inert material, the content of urea nitrate must not exceed 75 percent by mass and the mixture should not be capable of being detonated by test 1(a)(i) or test 1(a)(ii) in the UN Manual of Tests and Criteria (IBR, see § 171.7 of this subchapter).

* * * * *

44 The formulation must be prepared so that it remains homogenous and does not separate during transport. Formulations with low nitrocellulose contents and neither showing dangerous properties when tested for their ability to detonate, deflagrate or explode when heated under defined confinement by the appropriate test methods and criteria in the UN Manual of Tests and Criteria (IBR, see § 171.7 of this subchapter), nor classed as a Division 4.1 (flammable solid) when tested in accordance with the procedures specified in § 173.124 of this subchapter (chips, if necessary, crushed and sieved to a particle size of less than 1.25 mm), are not subject to the requirements of this subchapter.

* * * * *

119 This substance, when in quantities of not more than 11.5 kg (25.3 pounds), with not less than 10 percent water, by mass, also may be classed as Division 4.1, provided a negative test result is obtained when tested in accordance with test series 6(c) of the UN Manual of Tests and Criteria (IBR, see § 171.7 of this subchapter).

* * * * *

132 Ammonium nitrate fertilizers of this composition are not subject to the requirements of this subchapter if shown by a trough test (see UN Manual of Tests and Criteria, Part III, sub-section 38.2) (IBR, see § 171.7 of this subchapter) not to be liable to self-sustaining decomposition and provided that they do not contain an excess of nitrate greater than 10% by mass (calculated as potassium nitrate).

* * * * *

137 Cotton, dry, is not subject to the requirements of this subchapter when it is baled in accordance with ISO 8115, ''Cotton Bales—Dimensions and

Density'' (IBR, see § 171.7 of this subchapter) to a density of at least 360 kg/m3 (22.4lb/ft3) and it is transported in a freight container or closed transport vehicle.

* * * * *

144 If transported as a residue in an underground storage tank (UST), as defined in 40 CFR 180.12, that has been cleaned and purged or rendered inert according to the American Petroleum Institute (API) Standard 1604 (IBR, see § 171.7 of this subchapter), then the tank and this material are not subject to any other requirements of this subchapter. However, sediments remaining in the tank that meet the definition for a hazardous material are subject to the applicable regulations of this subchapter.

(2) * * *

Code/Special Provisions

* * * * *

A52 A cylinder containing Oxygen, compressed, may not be loaded into a passenger-carrying aircraft or into an inaccessible cargo location on a cargo-only aircraft unless it is placed in an overpack or outer packaging that conforms to the performance criteria of Air Transport Association (ATA) Specification No. 300 (IBR, see § 171.7 of this subchapter) for Category I shipping containers.

* * * * *

(3) * * *

* * * * *

B13 * * *

c. Packagings are excepted from the design stress limits at elevated temperatures, as described in Section VIII of the ASME Code (IBR, see § 171.7 of this subchapter). However, the design stress limits may not exceed 25 percent of the stress for 0 temper at the maximum design temperature of the cargo tank, as specified in the Aluminum Association's ''Aluminum Standards and Data'' (IBR, see § 171.7 of this subchapter).

* * * * *

B33 MC 300, MC 301, MC 302, MC 303, MC 305, MC 306, and DOT 406 cargo tanks equipped with a 1 psig normal vent used to transport gasoline must conform to Table I of this Special Provision. Based on the volatility class determined by using ASTM D 439 and the Reid vapor pressure (RVP) of the particular gasoline, the maximum lading pressure and maximum ambient temperature permitted during the loading of gasoline may not exceed that listed in Table I.

* * * * *

■ 11. In § 172.400a, paragraph (a)(1)(iv) is revised to read as follows:

§ 172.400a Exceptions from labeling.

(a) * * *

(1) * * *

(iv) Durably and legibly marked in accordance with CGA C–7, appendix A (IBR, see § 171.7 of this subchapter).

* * * * *

■ 12. In § 172.401, paragraph (c)(2) is revised to read as follows:

§ 172.401 Prohibited labeling.

* * * * *

(c) * * *

(2) The IMDG Code (IBR, see § 171.7 of this subchapter);

* * * * *

PART 173—SHIPPERS—GENERAL REQUIREMENTS FOR SHIPMENTS AND PACKAGINGS

■ 13. The authority citation for part 173 continues to read as follows:

Authority: 49 U.S.C. 5101–5127, 44701; 49 CFR 1.45, 1.53.

PART 173—[AMENDED]

■ 14. In Part 173, amend the following sections by removing the parenthetical phrase ''(incorporated by reference; see § 171.7 of this subchapter)'' and adding the parenthetical phrase ''(IBR, see § 171.7 of this subchapter)'' in each of the following places:

173.115(c)(2)
173.198(a)
173.225(e)(3)(vi) note 173.301(c)
173.301(g)
173.304a(e)(1)(ii)

■ 15. In Part 173, amend the following sections by removing the parenthetical phrase ''(incorporated by reference, see § 171.7 of this subchapter)'' and adding the parenthetical phrase ''(IBR, see § 171.7 of this subchapter)'' in each of the following places:

173.316(a)(4)
173.318(a)(4)
173.415(d)
173.416(b)
173.417(a)(5)
173.417(a)(8)(i)

■ 16. In Part 173, amend the following sections by removing the parenthetical phrase ''(see § 171.7 of this subchapter)'' and adding the parenthetical phrase ''(IBR, see § 171.7 of this subchapter)'' in each of the following places:

173.21(f) introductory text
172.21(f)(3)(ii)
173.24(d)(2)
173.32(c)(4)(i)
173.185(c)(3)
173.185(e)(6)
173.469(d)(1)

■ 17. In Part 173, amend the following sections by removing the parenthetical phrase ''(incorporated by reference, see § 171.7 of this subchapter)'' in each of the following places:

173.417(b)(4)
173.420(b)
173.420(c)
173.473(a)(1)

■ 18. In § 173.6, paragraph (a)(2) is revised to read as follows:

§ 173.6 Materials of trade exceptions.

* * * * *

(a) * * *

(2) A Division 2.1 or 2.2 material in a cylinder with a gross weight not over 100 kg (220 pounds), or a permanently mounted tank manufactured to the ASME Code of not more than 70 gallon water capacity for a non-liquefied Division 2.2 material with no subsidiary hazard.

* * * * *

■ 19. In § 173.22, paragraph (a)(2)(iii) is revised to read as follows:

§ 173.22 Shipper's responsibility.

* * * * *

(a) * * *

(2) * * *

(iii) National or international regulations based on the UN Recommendations (IBR, see § 171.7 of this subchapter), as authorized in § 173.24(d)(2);

* * * * *

■ 20. In § 173.24b, paragraph (e)(2) introductory text, and paragraphs (e)(2)(i) and (e)(2)(iii) are revised to read as follows:

§ 173.24b Additional general requirements for bulk packagings.

* * * * *

(e) * * *

(2) *UN portable tanks manufactured outside the United States.* A UN portable tank manufactured outside the United States, in accordance with national or international regulations based on the UN Recommendations (IBR, see § 171.7 of this subchapter), which is an authorized packaging under § 173.24 of this subchapter, may be filled, offered and transported in the United States, if the § 172.101 Table of this subchapter authorizes the hazardous material for transportation in the UN portable tank and it conforms to the applicable T codes, and tank provision codes, or other special provisions assigned to the hazardous material in Column (7) of the Table when manufactured in a country other than the United States. In addition, the portable tank must—

(i) Conform to applicable provisions in the UN Recommendations (IBR, see

§ 171.7 of this subchapter) and the requirements of this subpart;

* * * * *

(iii) Be designed and manufactured according to the ASME Code (IBR, see § 171.7 of this subchapter) or a pressure vessel design code approved by the Associate Administrator;

* * * * *

■ 21. In § 173.31, the first sentence in paragraph (b)(5) is revised to read as follows:

§ 173.31 Use of tank cars.

* * * * *

(b) * * *

(5) *Bottom-discontinuity protection requirements.* No person may offer for transportation a hazardous material in a tank car with bottom-discontinuity protection unless the tank car has bottom-discontinuity protection that conforms to the requirements of E9.00 and E10.00 of the AAR Specifications for Tank Cars (IBR, see § 171.7 of this subchapter). * * *

* * * * *

■ 22. In § 173.32, paragraphs (c)(4) introductory text and (c)(4)(i) are revised to read as follows:

§ 173.32 Requirements for the use of portable tanks.

* * * * *

(c) * * *

(4) Any portable tank container constructed prior to May 15, 1950, complying with the requirements of either the ASME Code for Unfired Pressure Vessels, 1946 Edition, or the API ASME Code for Unfired Pressure Vessels, 1943 Edition, may be used for the transportation of liquefied compressed gas, provided it fulfills all the requirements of the part and specifications for the particular gas or gases to be transported. Such portable tanks must be marked ''ICC Specification 51X'' on the plate required by the specification, except as modified by any or all of the following:

(i) Portable tanks designed and constructed in accordance with Pars. U–68, U–69, or U–201 of the ASME Code, 1943 and 1946 editions, may be used. Portable tanks designed and constructed in accordance with Par. U–68 or Par. U–69 may be re-rated at a working pressure 25 percent in excess of the design pressure for which the portable tank was originally constructed. If the portable tank is re-rated, the re-rated pressure must be marked on the plate as follows: ''Re-rated working pressure—psig''.

* * * * *

■ 23. In § 173.56, paragraphs (b)(2)(i), (b)(3)(i), (b)(4), and (j)(1) are revised to read as follows:

§ 173.56 New explosives—definition and procedures for classification and approval.

* * * * *

(b) * * *

(2) * * *

(i) U.S. Army Technical Center for Explosives Safety (SMCAC–EST), Naval Sea Systems Command (SEA–9934), or Air Force Safety Agency (SEW), when approved by the Chairman, DOD Explosives Board, in accordance with the DOD Explosives Hazard Classification Procedures (IBR, see § 171.7 of the subchapter); or

* * * * *

(3) * * *

(i) Examined by the DOE in accordance with the DOD Explosives Hazard Classification Procedures, and must be classed and approved by DOE; or

* * * * *

(4) For a material shipped under the description of ''ammonium nitrate-fuel oil mixture (ANFO)'', the only test required for classification purposes is the Cap Sensitivity Test—Test Method 5(a) prescribed in the Explosive Test Manual (UN Manual of Tests and Criteria) (IBR, see § 171.7 of the subchapter). The test must be performed by an agency listed in paragraph (b)(1), (b)(2), or (b)(3) of this section, the manufacturer, or the shipper. A copy of the test report must be submitted to the Associate Administrator before the material is offered for transportation, and a copy of the test report must be retained by the shipper for as long as that material is shipped. At a minimum, the test report must contain the name and address of the person or organization conducting the test, date of the test, quantitative description of the mixture, including prill size and porosity, and a description of the test results.

* * * * *

(j) * * *

(1) The fireworks are manufactured in accordance with the applicable requirements in APA Standard 87–1 (IBR, see § 171.7 of this subchapter);

* * * * *

■ 24. In § 173.57, paragraph (a) introductory text is revised to read as follows:

§ 173.57 Acceptance criteria for new explosives.

(a) Unless otherwise excepted, an explosive substance must be subjected to the Drop Weight Impact Sensitivity Test (Test Method 3(a)(i)), the Friction Sensitivity Test (Test Method 3(b)(iii)), the Thermal Stability Test (Test Method 3(c)) at 75 °C (167 °F) and the Small-Scale Burning Test (Test Method 3(d)(i)), each as described in the Explosive Test Manual (UN Manual of Tests and Criteria) (IBR, see § 171.7 of this subchapter). A substance is forbidden for transportation if any one of the following occurs:

* * * * *

■ 25. In § 173.58, paragraph (a) introductory text is revised to read as follows:

§ 173.58 Assignment of class and division for new explosives.

(a) *Division 1.1, 1.2, 1.3, and 1.4 explosives.* In addition to the test prescribed in § 173.57 of this subchapter, a substance or article in these divisions must be subjected to Test Methods 6(a), 6(b), and 6(c), as described in the UN Manual of Tests and Criteria (IBR, see § 171.7 of this subchapter), for assignment to an appropriate division. The criteria for assignment of class and division are as follows:

* * * * *

■ 26. In § 173.63, paragraph (f)(2) is revised to read as follows:

§ 173.63 Packaging exceptions.

(f) * * *

(2) IME Standard 22 container (IBR, see § 171.7 of this subchapter) or compartment is used as the outer packaging;

* * * * *

■ 27. In § 173.120, paragraphs (a)(3), (a)(4), and (b)(3) are revised to read as follows:

§ 173.120 Class 3—Definitions.

(a) * * *

(3) Any liquid with a flash point greater than 35 °C (95 °F) that does not sustain combustion according to ASTM D 4206 (IBR, see § 171.7 of this subchapter) or the procedure in appendix H of this part.

(4) Any liquid with a flash point greater than 35 °C (95 °F) and with a fire point greater than 100 °C (212 °F) according to ISO 2592 (IBR, see § 171.7 of this subchapter).

* * * * *

(b) * * *

(3) A combustible liquid that does not sustain combustion is not subject to the requirements of this subchapter as a combustible liquid. Either the test method specified in ASTM D 4206 or the procedure in appendix H of this part may be used to determine if a material sustains combustion when heated under

test conditions and exposed to an external source of flame.

* * * * *

■ 28. In § 173.121, paragraph (b)(2)(i) is revised to read as follows:

§ 173.121 Class 3—Assignment of packing group.

(b) * * *

(2) * * *

(i) *Viscosity test.* The flow time in seconds is determined at 23 °C (73.4 °F) using the ISO standard cup with a 4 mm (0.16 inch) jet as set forth in ISO 2431 (IBR, see § 171.7 of this subchapter). Where the flow time exceeds 100 seconds, a further test is carried out using the ISO standard cup with a 6 mm (0.24 inch) jet.

* * * * *

■ 29. In § 173.124, paragraph (a)(2)(iii)(C), (a)(2)(iv), (a)(3)(ii), and (a)(3)(iii) are revised to read as follows:

§ 173.124 Class 4, Divisions 4.1, 4.2 and 4.3—Definitions.

* * * * *

(a) * * *

(2) * * *

(iii) * * *

(C) Performance of the self-reactive material under the test procedures specified in the UN Manual of Tests and Criteria (IBR, see § 171.7 of this subchapter) and the provisions of paragraph (a)(2)(iii) of this section; and

* * * * *

(iv) *Tests.* The generic type for a self-reactive material must be determined using the testing protocol from Figure 14.2 (Flow Chart for Assigning Self-Reactive Substances to Division 4.1) from the UN Manual of Tests and Criteria.

* * * * *

(3) * * *

(ii) Show a burning rate faster than 2.2 mm (0.087 inches) per second when tested in accordance with the UN Manual of Tests and Criteria (IBR, see § 171.7 of this subchapter); or

(iii) Any metal powders that can be ignited and react over the whole length of a sample in 10 minutes or less, when tested in accordance with the UN Manual of Tests and Criteria.

* * * * *

■ 30. In § 173.125, paragraph (a) is revised to read as follows:

§ 173.125 Class 4—Assignment of packing group.

(a) The packing group of a Class 4 material is assigned in column (5) of the § 172.101 Table. When the § 172.101 Table provides more than one packing group for a hazardous material, the packing group shall be determined on the basis of test results following test methods given in the UN Manual of Tests and Criteria (IBR, see § 171.7 of this subchapter) and by applying the appropriate criteria given in this section.

* * * * *

■ 31. In § 173.127, paragraph (a)(1) is revised to read as follows:

§ 173.127 Class 5, Division 5.1—Definition and assignment of packing groups.

(a) * * *

(1) A solid material is classed as a Division 5.1 material if, when tested in accordance with the UN Manual of Tests and Criteria (IBR, see § 171.7 of this subchapter), its mean burning time is less than or equal to the burning time of a 3:7 potassium bromate/cellulose mixture.

* * * * *

■ 32. In § 173.128, paragraphs (c)(3) and (e) are revised to read as follows:

§ 173.128 Class 5, Division 5.2—Definitions and types.

* * * * *

(c) * * *

(3) Performance of the organic peroxide under the test procedures specified in the UN Manual of Tests and Criteria (IBR, see § 171.7 of this subchapter), and the provisions of paragraph (d) of this section.

* * * * *

(e) *Tests.* The generic type for an organic peroxide shall be determined using the testing protocol from Figure 20.1(a) (Classification and Flow Chart Scheme for Organic Peroxides) from the UN Manual of Tests and Criteria (IBR, see § 171.7 of this subchapter).

■ 33. In § 173.137, the introductory paragraph is revised to read as follows:

§ 173.137 Class 8—Assignment of packing group.

The packing group of a Class 8 material is indicated in Column 5 of the § 172.101 Table. When the § 172.101 Table provides more than one packing group for a Class 8 material, the packing group must be determined using data obtained from tests conducted in accordance with the 1992 OECD Guideline for Testing of Chemicals, Number 404, ''Acute Dermal Irritation/Corrosion'' (IBR, see § 171.7 of this subchapter) as follows:

* * * * *

■ 34. In § 173.158, paragraph (b)(1)(v) is revised to read as follows:

§ 173.158 Nitric acid.

* * * * *

(b) * * *

(1) * * *

(v) All parts of drum exposed to lading must be capable of withstanding the corrosive effect of nitric acid to the extent that 65 percent boiling nitric acid does not penetrate the metal more than 0.0381 mm (0.002 inches) per month. (ASTM A 262 may be used for a suitable corrosion test procedure.)

* * * * *

■ 35. In § 173.197, paragraph (c) introductory text is revised to read as follows:

§ 173.197 Regulated medical waste.

* * * * *

(c) *Large Packagings.* Large Packagings constructed, tested, and marked in accordance with the requirements of the UN Recommendations (IBR, see § 171.7 of this subchapter) and conforming to other requirements of this paragraph (c) may be used for the transportation of regulated medical waste, provided the waste is contained in inner packagings conforming to the requirements of paragraph (e) of this section. Each Large Packaging design must be capable of meeting the vibration test specified in § 178.819 of this subchapter. Each Large Packaging is subject to the periodic design requalification requirements for IBCs in § 178.801(e) of this subchapter, and to the proof of compliance requirements of § 178.801(j) and record retention requirements of § 178.801(l) of this subchapter. Inner packagings used for liquids must be rigid.

* * * * *

■ 36. In § 173.225, paragraph (e)(4) is revised to read as follows:

§ 173.225 Packaging requirements and other provisions for organic peroxides.

* * * * *

(e) * * *

(4) For tertiary butyl hydroperoxide (TBHP), each tank car, cargo tank or portable tank must contain 7.6 cm (3.0 inches) low density polyethylene (PE) saddles having a melt index of at least 0.2 grams per 10 minutes, as set forth in ASTM D 1238, condition E (IBR, see § 171.7 of this subchapter), as part of the lading, with a ratio of PE to TBHP over a range of 0.008 to 0.012 by mass. Alternatively, plastic or metal containers equipped with fusible plugs having a melting point between 69 °C (156 °F) and 71 °C (160 °F) and filled with a sufficient quantity of water to dilute the TBHP to 65 percent or less by mass may be used. The PE saddles must be visually inspected after each trip and, at a minimum, once every 12 months, and replaced when discoloration,

fracture, severe deformation, or other indication of change is noted.

* * * * *

■ 37. In § 173.249, paragraph (d) is revised to read as follows:

§ 173.249 Bromine.

* * * * *

(d) The tank must be made from nickel-clad or lead-lined steel plate. Nickel cladding or lead lining must be on the inside of the tank. Nickel cladding must comprise at least 20 percent of the required minimum total thickness. Nickel cladding must conform to ASTM B 162 (IBR, see § 171.7 of this subchapter). Lead lining must be at least 4.763 mm (0.188 inch) thick. All tank equipment and appurtenances in contact with the lading must be lined or made from metal not subject to deterioration by contact with lading.

* * * * *

■ 38. In § 173.301, paragraph (f)(1) is revised to read to read as follows:

§ 173.301 General requirements for shipment of compressed gases in cylinders and spherical pressure vessels.

* * * * *

(f) * * *

(1) Except as provided in paragraphs (f)(5) and (f)(6) of this section, a cylinder filled with a gas and offered for transportation must be equipped with one or more pressure relief devices sized and selected as to type, location, and quantity, and tested in accordance with CGA S–1.1 (compliance with paragraph 9.1.1.1 of CGA S–1.1 is not required) and S–7. The pressure relief device must be capable of preventing rupture of the normally filled cylinder when subjected to a fire test conducted in accordance with CGA C–14 (IBR, see § 171.7 of this subchapter), or, in the case of an acetylene cylinder, CGA C–12 (IBR, see § 171.7 of this subchapter).

* * * * *

■ 39. In § 173.302, paragraph (b)(3) is revised to read as follows:

§ 173.302 Filling of cylinders with non-liquefied (permanent) compressed gases.

* * * * *

(b) * * *

(3) Each cylinder must be cleaned in accordance with the requirements of GSA Federal Specification RR–C–901C, paragraphs 3.3.1 and 3.3.2 (IBR, see § 171.7 of this subchapter). Cleaning agents equivalent to those specified in Federal Specification RR–C–901C may be used provided they do not react with oxygen. One cylinder selected at random from a group of 200 or fewer and cleaned at the same time must be tested for oil contamination in accordance with Federal Specification RR–C–901C, paragraph 4.4.2.2, and meet the specified standard of cleanliness.

* * * * *

■ 40. In § 173.302a, the definition of ''K'' in paragraph (b)(3)(i)(A) and paragraph (b)(3)(iii) are revised to read as follows:

§ 173.302a Additional requirements for shipment of non-liquefied (permanent) compressed gases in specification cylinders.

* * * * *

(b) * * *

(3) * * *

(i) * * *

(A) * * *

Where: * * *

K = factor $\times 10^{-7}$ experimentally determined for the particular type of cylinder being tested or derived in accordance with CGA C–5 (IBR, see § 171.7 of this subchapter);

* * * * *

(iii) Compliance with average wall stress limitation may be determined by computing the elastic expansion rejection limit in accordance with CGA C–5, by reference to data tabulated in CGA C–5, or by the manufacturer's marked elastic expansion rejection limit (REE) on the cylinder.

* * * * *

■ 41. In § 173.303, paragraphs (a) and (e) are revised to read as follows:

§ 173.303 Charging of cylinders with compressed gas in solution (acetylene).

(a) *Cylinder, filler and solvent requirements.* (Refer to applicable parts of Specification 8 and 8AL). Acetylene gas must be shipped in Specification 8 or 8AL cylinders (§ 178.59 or § 178.60 of this subchapter). The cylinders shall consist of metal shells filled with a porous material, and this material must be charged with a suitable solvent. The cylinders containing the porous material and solvent shall be successfully tested in accordance with CGA C–12 (IBR, see § 171.7 of this subchapter). Representative samples of cylinders charged with acetylene must be successfully tested in accordance with CGA C–12.

* * * * *

(e) *Prefill requirements.* Before each filling of an acetylene cylinder, the person filling the cylinder must visually inspect the outside of the cylinder in accordance with the prefill requirements contained in CGA C–13, Section 3 (IBR, see § 171.7 of this subchapter).

* * * * *

■ 42. In § 173.306, paragraphs (e)(1)(iii) and (e)(1)(v) are revised to read as follows:

§ 173.306 Limited quantities of compressed gases.

* * * * *

(e) * * *

(1) * * *

(iii) Each pressure vessel must be equipped with a safety device meeting the requirements of ANSI/ASHRAE 15 (IBR, see § 171.7 of this subchapter).

* * * * *

(v) Pressure vessels must be manufactured, inspected and tested in accordance with ANSI/ASHRAE 15, or when over 6 inches internal diameter, in accordance with Section VIII of the ASME Code (IBR, see § 171.7 of this subchapter).

* * * * *

■ 43. In § 173.307, paragraph (a)(4)(iv) is revised to read as follows:

§ 173.307 Exceptions for compressed gases.

(a) * * *

(4) * * *

(iv) Except when offered or transported by air or vessel, 20 kg (44 pounds) or less of a Group A1 refrigerant specified in ANSI/ASHRAE Standard 15 (IBR, see § 171.7 of this subchapter); or

* * * * *

■ 44. In § 173.315, paragraph (a) Notes 3, 11, and 15, and paragraphs (i)(1)(i), (i)(13), (j)(1), (k) introductory paragraph, (k)(3), (l)(5), and (m)(1) are revised to read as follows:

§ 173.315 Compressed gases in cargo tanks and portable tanks.

(a) * * *

Note 3: If cargo tanks and portable tank containers for carbon dioxide, refrigerated liquid, and nitrous oxide, refrigerated liquid, are designed to conform to the requirements in Section VIII of the ASME Code for low temperature operation (IBR, see § 171.7 of this subchapter), the design pressure may be reduced to 100 psig or the controlled pressure, whichever is greater.

* * * * *

Note 11: MC–330, MC–331 and MC–338 cargo tanks must be insulated. Cargo tanks must meet all the following requirements. Each tank must have a design service temperature of minus 100°F., or no warmer than the boiling point at one atmosphere of the hazardous material to be shipped therein, whichever is colder, and must conform to the low-temperature requirements in Section VIII of the ASME Code. When the normal travel time is 24 hours or less, the tank's holding time as loaded must be at least twice the normal travel time. When the normal travel time exceeds 24 hours, the tank's holding time as loaded must be at least 24 hours

greater than the normal travel time. The holding time is the elapsed time from loading until venting occurs under equilibrium conditions. The cargo tank must have an outer jacket made of steel when the cargo tank is used to transport a flammable gas.

* * * * *

Note 15: Specifications MC 330 and MC 331 cargo tanks constructed of other than quenched and tempered steel (NQT) are authorized for all grades of liquefied petroleum gases. Only grades of liquefied petroleum gases determined to be ''noncorrosive'' are authorized in Specification MC 330 and MC 331 cargo tanks constructed of quenched and tempered steel (QT). ''Noncorrosive'' means the corrosiveness of the gas does not exceed the limitations for classification 1 of the ASTM Copper Strip Classifications when tested in accordance with ASTM D 1838, ''Copper Strip Corrosion by Liquefied Petroleum (LP) Gases'' (IBR, see § 171.7 of this subchapter). (For (QT) and (NQT) marking requirements, see § 172.328(c) of this subchapter. For special shipping paper requirements, see § 172.203(h) of this subchapter.)

* * * * *

(i) * * *

(1) * * *

(i) The total relieving capacity, as determined by the flow formulas contained in Section 5 of CGA S–1.2 (IBR, see § 171.7 of this subchapter), must be sufficient to prevent a maximum pressure in the tank of more than 120 percent of the design pressure;

* * * * *

(13) A safety relief valve on a chlorine cargo tank must conform to one of the following standards of The Chlorine Institute, Inc.: Type 1 ½ JQ225, Dwg. H51970 (IBR, see § 171.7 of this subchapter); or Type 1 ½ JQ225, Dwg. H50155 (IBR, see § 171.7 of this subchapter).

* * * * *

(j) * * *

(1) Each container must be constructed in compliance with the requirements in Section VIII of the ASME Code (containers built in compliance with earlier editions starting with 1943 are authorized) and must be marked to indicate compliance in the manner specified by the respective Code.

* * * * *

(k) A nonspecification cargo tank meeting, and marked in conformance with, the edition of Section VIII of the ASME Code in effect when it was fabricated may be used for the transportation of liquefied petroleum gas provided it meets all of the following conditions:

* * * * *

(3) It must have been manufactured in conformance with Section VIII of the ASME Code prior to January 1, 1981, according to its ASME name plate and manufacturer's data report.

* * * * *

(l) * * *

(5) The analysis method for water content must be as prescribed in CGA G–2.2, ''Tentative Standard Method for Determining Minimum of 0.2 percent water in Anhydrous Ammonia,'' (IBR, see § 171.7 of this subchapter).

* * * * *

(m) * * *

(1) Has a minimum design pressure of 250 psig and meets the requirements of the edition of Section VIII of the ASME Code in effect at the time it was manufactured and is marked accordingly;

* * * * *

■ 45. In § 173.318, paragraph (b)(2)(i) introductory text and paragraph (b)(9)(ii) are revised to read as follows:

§ 173.318 Cryogenic liquids in cargo tanks.

* * * * *

(b) * * *

(2) * * *

(i) *Tanks in oxygen or flammable cryogenic liquid service.* For tanks in oxygen or flammable cryogenic liquid service, the primary system and the secondary system of pressure relief devices must each have a flow capacity equal to or greater than that calculated by the applicable formula in paragraph 5.3.2 or paragraph 5.3.3 of CGA S–1.2 (IBR, see § 171.7 of this subchapter). In addition:

* * * * *

(9) * * *

(ii) On a vacuum-insulated cargo tank the jacket must be protected by a suitable relief device to release internal pressure. The discharge area of this device must be at least 0.00024 square inch per pound of water capacity of the tank. This relief device must function at a pressure not exceeding the internal design pressure of the jacket, calculated in accordance with Section VIII of the ASME Code (IBR, see § 171.7 of this subchapter), or 25 psig, whichever is less.

* * * * *

■ 46. In § 173.320, paragraph (c) is revised to read as follows:

§ 173.320 Cryogenic liquids; exceptions.

* * * * *

(c) For transportation aboard aircraft, see the ICAO Technical Instructions (IBR, see § 171.7 of this subchapter), Packing Instruction 202 and the packaging specifications in part 6, chapter 5.

* * * * *

■ 47. In § 173.323, the last two sentences in paragraph (b)(3) are revised to read as follows:

§ 173.323 Ethylene oxide.

* * * * *

(b) * * *

(3) * * * The capacity of relief device and insulation must be such that the charged receptacle will not explode when tested by the method described in CGA Pamphlet C–14 (IBR, see § 171.7 of this subchapter) or other equivalent method. Each completed package must be capable of passing all Packing Group I performance tests.

* * * * *

■ 48. Section 173.336 is revised to read as follows:

§ 173.336 Nitrogen dioxide, liquefied, or dinitrogen tetroxide, liquefied.

Nitrogen dioxide, liquefied, or dinitrogen tetroxide, liquefied, must be packaged in specification cylinders as prescribed in § 173.192. Specification cylinders prescribed in § 173.192 with valve removed are authorized. Each valve opening must be closed by means of a solid metal plug with tapered thread properly luted to prevent leakage. Transportation in DOT 3AL cylinders is authorized only by highway or rail. Each cylinder must be cleaned in compliance with the requirements of GSA Federal Specification RR–C–901C, paragraphs 3.3.1 and 3.3.2 (IBR, see § 171.7 of this subchapter). Cleaning agents equivalent to those specified in Federal Specification RR–C–901C may be used; however, any cleaning agent must not be capable of reacting with oxygen. One cylinder selected at random from a group of 200 or fewer and cleaned at the same time must be tested for oil contamination in accordance with Federal Specification RR–C–901C, paragraphs 4.4.2.2 and meet the standard of cleanliness specified therein.

■ 49. In § 173.337, paragraph (b) is revised to read as follows:

§ 173.337 Nitric oxide.

* * * * *

(b) Each cylinder must be cleaned in compliance with the requirements of GSA Federal Specification RR–C–901C, paragraphs 3.3.1 and 3.3.2 (IBR, see § 171.7 of this subchapter). Cleaning agents equivalent to those specified in Federal Specification RR–C–901C may be used; however, any cleaning agent must not be capable of reacting with oxygen. One cylinder selected at random from a group of 200 or fewer and cleaned at the same time must be tested for oil contamination in accordance with Federal Specification

RR–C–901C paragraph 4.4.2.2 and meet the standard of cleanliness specified therein.

■ 50. In § 173.411, paragraphs (b)(5)(ii) and (b)(5)(iii) are revised to read as follows:

§ 173.411 Industrial packagings.

* * * * *

(b) * * *

(5) * * *

(ii) Be designed to conform to the requirements of ISO 1496–3, ''Series 1 Freight Containers—Specifications and Testing—Part 3: Tank Containers for Liquids, Gases and Pressurized Dry Bulk'' (IBR, see § 171.7 of this subchapter);

(iii) Be designed so that loss of shielding will not result in a significant increase in the radiation levels recorded at the external surfaces if they are subjected to the tests specified in ISO 1496–3; and

* * * * *

■ 51. In § 173.420, paragraphs (a)(1) and (a)(2)(iii) introductory text are revised to read as follows:

§ 173.420 Uranium hexafluoride (fissile, fissile excepted and non-fissile).

(a) * * *

(1) Before initial filling and during periodic inspection and test, packagings must be cleaned in accordance with ANSI N14.1 (IBR, see § 171.7 of this subchapter).

(2) * * *

(iii) Section VIII of the ASME Code (IBR, see § 171.7 of this subchapter), provided the packaging —

* * * * *

■ 52. In § 173.469, paragraph (a)(4)(ii) is revised to read as follows:

§ 173.469 Tests for special form Class 7 (radioactive) materials.

(a) * * *

(4) * * *

(ii) A specimen that comprises or simulates Class 7 (radioactive) material contained in a sealed capsule need not be subjected to the leaktightness procedure specified in this section provided it is alternatively subjected to any of the tests prescribed in ISO/TR4826, ''Sealed Radioactive Sources Leak Test Methods'' (IBR, see § 171.7 of this subchapter).

* * * * *

■ 53. In § 173.473, the introductory paragraph is revised to read as follows:

§ 173.473 Requirements for foreign-made packages.

In addition to other applicable requirements of this subchapter, each offeror of a foreign-made Type B, Type B(U), Type B(M), or fissile material package for which a Competent Authority Certificate is required by IAEA's ''Regulations for the Safe Transport of Radioactive Materials, Safety Series No. 6'' (IBR, see § 171.7 of this subchapter), shall also comply with the following requirements:

* * * * *

■ 54. In Appendix H to Part 173, paragraph 3. introductory paragraph is revised to read as follows:

Appendix H to Part 173—Method of Testing for Sustained Combustibility

* * * * *

3. Apparatus

A combustibility tester consisting of a block of aluminum alloy or other corrosion-resistant metal of high thermal conductivity is used. The block has a concave well and a pocket drilled to take a thermometer. A small gas jet assembly on a swivel is attached to the block. The handle and gas inlet for the gas jet may be fitted at any convenient angle to the gas jet. A suitable apparatus is shown in Figure 5.1 of the UN Recommendations, and the essential dimensions are given in Figures 5.1 and 5.2 of the UN Recommendations (IBR, see § 171.7 of this subchapter). The following equipment is needed:

* * * * *

PART 174—CARRIAGE BY RAIL

■ 55. The authority citation for part 174 continues to read as follows:

Authority: 49 U.S.C. 5101–5127; 49 CFR 1.53.

■ 56. In § 174.55, paragraph (c) is revised to read as follows:

§ 174.55 General requirements.

* * * * *

(c) The doors of a freight container or transport vehicle may not be used to secure a load that includes a package containing a hazardous material unless the doors meet the design strength requirements of Specification M–930 (for freight containers) and M–931 (for trailers) in the AAR's specification for ''Specially Equipped Freight Car and Intermodal Equipment'' (IBR, see § 171.7 of this subchapter) and the load is also within the limits of the design strength requirements for the doors.

■ 57. In § 174.63, paragraphs (c)(2), (c)(3), and (c)(4) are revised to read as follows:

§ 174.63 Portable tanks, IM portable tanks, IBCs, cargo tanks, and multi-unit tank car tanks.

* * * * *

(c) * * *

(2) The tank and flatcar conform to requirements in AAR 600 of the AAR Specifications for Tank Cars, ''Specifications for Acceptability of Tank Containers'' (IBR, see § 171.7 of this subchapter);

(3) For TOFC service, the trailer chassis conforms to requirements in paragraphs 3, 4, 5, and 6 of AAR Specification M–943, ''Container Chassis For TOFC Service'' of the AAR specification for ''Specially Equipped Freight Car and Intermodal Equipment'' (IBR, see § 171.7 of this subchapter);

(4) For COFC service, the container support and securement systems conform to requirements in Specification M–952, ''Intermodal Container Support and Securement Systems for Freight Cars'', of the AAR specification for ''Specially Equipped Freight Car and Intermodal Equipment'' (IBR, see § 171.7 of this subchapter);

* * * * *

PART 175—CARRIAGE BY AIRCRAFT

The authority citation for part 175 continues to read as follows:

Authority: 49 U.S.C. 5101–5127; 49 CFR 1.53.

■ 58. In § 175.33, paragraph (a)(1) introductory text is revised to read as follows:

§ 175.33 Notification of pilot-in-command.

(a) * * *

(1) The proper shipping name, hazard class and identification number of the material, including any remaining aboard from prior stops, as specified in § 172.101 of this subchapter or the ICAO Technical Instructions (IBR, see § 171.7 of this subchapter). In the case of Class 1 material, the compatibility group letter also must be shown. If a hazardous material is described by the proper shipping name, hazard class, and identification number appearing in:

* * * * *

PART 176—CARRIAGE BY VESSEL

■ The authority citation for part 176 continues to read as follows:

Authority: 49 U.S.C. 5101–5127; 49 CFR 1.53.

PART 176—[AMENDED]

■ 59. In Part 176, amend the following sections by removing the parenthetical phrase ''(see § 171.7 of this subchapter)'' and adding the parenthetical phrase ''(IBR, see § 171.7 of this subchapter)'' in each of the following places:

178.2, Explosive article
176.5(b)(8)
176.11(a) introductory text
176.27(b)
176.30(a) introductory text

■ 60. In § 176.2, the definition for *INF cargo* is revised to read as follows:

§ 176.2 Definitions.

* * * * *

INF cargo means packaged irradiated nuclear fuel, plutonium or high-level radioactive wastes as those terms are defined in the ''International Code for the Safe Carriage of Packaged Irradiated Nuclear Fuel, Plutonium and High-Level Radioactive Wastes on Board Ships'' (INF Code) contained in the IMDG Code (IBR, see § 171.7 of this subchapter).

* * * * *

■ 61. In § 176.140, paragraph (b) introductory paragraph is revised to read as follows:

§ 176.140 Segregation from other classes of hazardous materials.

* * * * *

(b) Class 1 (explosive) materials must be segregated from bulk solid dangerous cargoes in accordance with the IMDG Code (IBR, see § 171.7 of this subchapter). Notwithstanding § 176.83(b), ammonium nitrate and sodium nitrate may be stowed together with blasting explosives, except those containing chlorates, provided the mixed stowage is treated as blasting explosives (see § 176.410(e)).

■ 62. Section 176.720 is revised to read as follows:

§ 176.720 Requirements for carriage of INF cargo in international transportation.

In addition to all other applicable requirements of this subchapter, a vessel carrying INF cargo (see § 176.2, under INF cargo definition) in international transportation must meet the requirements of the INF Code contained in the IMDG Code (IBR, see § 171.7 of this subchapter).

PART 177—CARRIAGE BY PUBLIC HIGHWAY

■ 63. The authority citation for part 177 continues to read as follows:

Authority: 49 U.S.C. 5101–5127; 49 CFR 1.53.

§ 177.835 [Amended]

■ 64. In § 177.835, amend paragraph (g)(3)(ii) by removing the parenthetical phrase ''(incorporated by reference, see § 171.7 of this subchapter)'' and adding the parenthetical phrase ''(IBR, see § 171.7 of this subchapter)'' in its place.

■ 65. In § 177.840, paragraph (u) is revised to read as follows:

§ 177.840 Class 2 (gases) materials.

* * * * *

(u) *Unloading of chlorine cargo tank motor vehicles.* After July 1, 2001, unloading of chlorine from a cargo tank motor vehicle must be performed in compliance with Section 3 of the Chlorine Institute Pamphlet 57, ''Emergency Shut-off Systems for Bulk Transfer of Chlorine'' (IBR, see § 171.7 of this subchapter).

PART 178—SPECIFICATIONS FOR PACKAGINGS

■ 66. The authority citation for part 178 continues to read as follows:

Authority: 49 U.S.C. 5101–5127; 49 CFR 1.53.

PART 178—[AMENDED]

■ 67. In Part 178, amend the following sections by removing the parenthetical phrase ''(incorporated by reference; see § 171.7 of this subchapter)'' and adding the parenthetical phrase ''(IBR, see § 171.7 of this subchapter)'' in each of the following places:

178.36(k)(3)(i)
178.37(k)(3)(i)
178.38(k)(3)(i)
178.39(k)(3)(i)
178.44(m)(3)(i)
178.45(j)(3)(i)
178.47(d)
178.50(d)
178.50(k)(3)(i)
178.51(d)(2)
178.51(j)(3)(i)
178.51(l)(1)
178.53(d)
178.53(j)(5)(i)
178.55(k)(3)(i)
178.56(j)(3)(i)
178.57(d)(5)
178.57(j)(3)(i)
178.57(l)(4)(v)
178.57(o)(1)
178.58(d)(1)
178.58(m)(5)(i)
178.59(d)
178.59(j)(3)(i)
178.60(d)
178.60(l)(3)(i)
178.61(d)(4)
178.61(j)(3)(i)
178.65(c)(4)
178.68(j)(3)(i)
178.68(l)(2)
178.358–5(c)

■ 68. In Part 178, amend the following sections by removing the parenthetical phrase ''(see § 171.7 of this subchapter)'' and adding the parenthetical phrase ''(IBR, see § 171.7 of this subchapter)'' in each of the following places:

178.276(a)(1)
178.276(c)(7)
178.277(a)—Design pressure
178.277(b)(3)
178.277(e)(4)(iv)

■ 69. In Part 178, amend the following sections by removing the parenthetical phrase ''(incorporated by reference; see § 171.7 of this subchapter)'' in each of the following places:

178.51(l)(2)
178.51(l)(3)
178.56(l)(1)
178.56(l)(2)
178.56(l)(3)
178.57(e)(3)
178.57(l)(1)
178.57(l)(2)
178.57(l)(3)
178.57(l)(4)(vi)
178.57(m)(1)
178.60(n)(1)
178.60(n)(2)
178.60(n)(3)
178.61(l)(1)
178.61(l)(2)
178.61(l)(3)
178.61(m)(1)

■ 70. In Part 178, amend the following sections by removing the parenthetical phrase ''(see § 171.7 of this subchapter)'' in each of the following places:

178.273(c)(1)
178.276(b)(1)
178.276(b)(2)(i)
178.277(b)(1)

■ 71. In § 178.3, paragraph (b)(1) is revised to read as follows:

§ 178.3 Marking of packagings.

* * * * *

(b) * * *

(1) The U.S. manufacturer must establish that the packaging conforms to the applicable provisions of the ICAO Technical Instructions (IBR, see § 171.7 of this subchapter) or the IMDG Code (IBR, see § 171.7 of this subchapter), respectively.

* * * * *

■ 72. In § 178.35, paragraph (g) is revised to read as follows:

§ 178.35 General requirements for specification cylinders.

* * * * *

(g) *Inspector's report.* Each inspector shall prepare a report containing, at a minimum, the applicable information listed in CGA Pamphlet C–11 (IBR, see § 171.7 of this subchapter) or, until October 1, 1997, in accordance with the applicable test report requirements of this subchapter in effect on September 30, 1996. Any additional information or markings that are required by the applicable specification must be shown on the test report. The signature of the inspector on the reports certifies that the processes of manufacture and heat

treatment of cylinders were observed and found satisfactory.

* * * * *

■ 73. In § 178.44, the introductory text preceding the table in paragraph (b) is revised to read as follows:

§ 178.44 Specification 3HT seamless steel cylinders for aircraft use.

* * * * *

(b) *Authorized steel.* Open hearth or electric furnace steel of uniform quality must be used. A heat of steel made under the specifications listed in Table 1 in this paragraph (b), a check chemical analysis that is slightly out of the specified range is acceptable, if satisfactory in all other respects, provided the tolerances shown in Table 2 in this paragraph (b) are not exceeded. The maximum grain size shall be 6 or finer. The grain size must be determined in accordance with ASTM E 112–88 (IBR, see § 171.7 of this subchapter). Steel of the following chemical analysis is authorized:

* * * * *

■ 74. In § 178.45, paragraphs (f)(5)(ii), (f)(5)(iii), (f)(5)(iv), and (j)(4) are revised to read as follows:

§ 178.45 Specification 3T seamless steel cylinder.

* * * * *

(f) * * *

(5) * * *

(ii) Taper threads, when used, must be the American Standard Pipe thread (NPT) type and must be in compliance with the requirements of NBS Handbook H–28 (IBR, see § 171.7 of this subchapter).

(iii) Taper threads conforming to National Gas Taper thread (NGT) standards must be in compliance with the requirements of NBS Handbook H–28.

(iv) Straight threads conforming with National Gas Straight thread (NGS) standards are authorized. These threads must be in compliance with the requirements of NBS Handbook H–28.

* * * * *

(j) * * *

(4) Each impact specimen must be Charpy V-notch type size 10 mm x 10 mm taken in accordance with paragraph 11 of ASTM A 333 (IBR, see § 171.7 of this subchapter). When a reduced size specimen is used, it must be the largest size obtainable.

* * * * *

■ 75. In § 178.46, footnote 2 following table 1 in paragraph (b)(4), and paragraphs (e)(5)(ii)(A), (e)(5)(ii)(B), (e)(5)(iii)(A), (e)(5)(iii)(B), (e)(5)(iii)(C), (e)(5)(iv), and (i)(3)(i) are revised to read as follows:

§ 178.46 Specification 3AL seamless aluminum cylinders.

* * * * *

(b) * * *

(4) * * *

[2] Except for ''Pb'' and ''Bi'', the chemical composition corresponds with that of Table 1 of ASTM B 221 (IBR, see § 171.7 of this subchapter) for Aluminum Association alloy 6061.

* * * * *

(e) * * *

(5) * * *

(ii) * * *

(A) American Standard Pipe Thread (NPT) type, conforming to the requirements of NBS Handbook H–28 (IBR, see § 171.7 of this subchapter);

(B) National Gas Taper Thread (NGT) type, conforming to the requirements of NBS Handbook H–28; or

* * * * *

(iii) * * *

(A) National Gas Straight Thread (NGS) type, conforming to the requirements of NBS Handbook H–28;

(B) Unified Thread (UN) type, conforming to the requirements of NBS Handbook H–28;

(C) Controlled Radius Root Thread (UN) type, conforming to the requirements of NBS Handbook H–28; or

* * * * *

(iv) All straight threads must have at least 6 engaged threads, a tight fit, and a factor of safety in shear of at least 10 at the test pressure of the cylinder. Shear stress must be calculated by using the appropriate thread shear area in accordance with NBS Handbook H–28.

* * * * *

(i) * * *

(3) * * *

(i) The yield strength must be determined by either the ''offset'' method or the ''extension under load'' method as prescribed in ASTM B 557 (IBR, see § 171.7 of this subchapter).

* * * * *

■ 76. In § 178.55, paragraph (d)(3) is revised to read as follows:

§ 178.55 Specification 4B240ET welded or brazed cylinders.

* * * * *

(d) * * *

(3) Welding procedures and operators must be qualified in accordance with CGA C–3 (IBR, see § 171.7 of this subchapter).

* * * * *

■ 77. In § 178.56, paragraph (d)(3) is revised to read as follows:

§ 178.56 Specification 4AA480 welded steel cylinders.

* * * * *

(d) * * *

(3) Welding procedures and operators must be qualified in accordance with CGA C–3 (IBR, see § 171.7 of this subchapter).

* * * * *

■ 78. In § 178.59, paragraph (l)(1)(v) is revised to read as follows:

§ 178.59 Specification 8 steel cylinders with porous fillings for acetylene.

* * * * *

(l) * * *

(1) * * *

(v) The installed filling material must meet the requirements of CGA C–12 (IBR, see § 171.7 of this subchapter); and

* * * * *

■ 79. In § 178.60, paragraph (p)(1)(v) is revised to read as follows:

§ 178.60 Specification 8AL steel cylinders with porous fillings for acetylene.

* * * * *

(p) * * *

(1) * * *

(v) The installed filling material must meet the requirements of CGA C–12 (IBR, see § 171.7 of this subchapter); and

* * * * *

■ 80. In § 178.65, paragraph (b)(2) is revised to read as follows:

§ 178.65 Specification 39 non-reusable (non-refillable) cylinders.

* * * * *

(b) * * *

(2) *Aluminum.* Aluminum is not authorized for service pressures in excess of 500 psig. The analysis of the aluminum must conform to the Aluminum Association standard for alloys 1060, 1100, 1170, 3003, 5052, 5086, 5154, 6061, and 6063, as specified in its publication entitled ''Aluminum Standards and Data'' (IBR, see § 171.7 of this subchapter).

* * * * *

■ 81. In § 178.245–1, paragraph (a) is revised to read as follows:

§ 178.245–1 Requirements for design and construction.

(a) Tanks must be seamless or welded steel construction, or a combination of both, and have a water capacity in excess of 454 kg (1,000 pounds). Tanks must be designed, constructed, certified and stamped in accordance with Section VIII of the ASME Code (IBR, see § 171.7 of this subchapter).

* * * * *

■ 82. In § 178.245–3, paragraph (a) and Note 1 are revised to read as follows:

§ 178.245–3 Design pressure.

(a) The design pressure of a tank authorized under this specification shall

be not less than the vapor pressure of the commodity contained therein at 46 °C (115 °F), or as prescribed for a particular commodity by part 173 of this chapter, except that in no case shall the design pressure of any container be less than 100 psig or more than 500 psig. When corrosion factor is prescribed by these regulations, the wall thickness of the tank calculated in accordance with Section VIII of the ASME Code (IBR, see § 171.7 of this subchapter) shall be increased by 20 percent or 2.54 mm (0.10 inch), whichever is less.

Note 1: The term design pressure as used in this specification is identical to the term ''MAWP'' as used in the ASME Code.

* * * * *

■ 83. In § 178.245–4, paragraph (b) is revised to read as follows:

§ 178.245–4 Tank mountings.

* * * * *

(b) All tank mountings such as skids, fastenings, brackets, cradles, lifting lugs, etc., intended to carry loadings shall be permanently secured to tanks in accordance with the requirements in Section VIII of the ASME Code (IBR, see § 171.7 of this subchapter) under which the tanks were fabricated, and shall be designed to withstand static loadings in any direction equal to twice the weight of the tank and attachments when filled with the lading using a safety factor of not less than four, based on the ultimate strength of the material to be used. The specific gravity used in determining the static loadings shall be shown on the marking required by § 178.245–6(a) and on the report required by § 178.245–7(a).

* * * * *

■ 84. In § 178.245–6, the first sentence in paragraph (a) is revised to read as follows:

§ 178.245–6 Name plate.

(a) In addition to the markings required by Section VIII of the ASME Code (IBR, see § 171.7 of this subchapter) under which tanks were constructed, they shall have permanently affixed, in close proximity to the ASME ''U'' stamp certification, a metal plate.* * *

* * * * *

■ 85. In § 178.245–7, paragraph (a) is revised to read as follows:

§ 178.245–7 Report.

(a) A copy of the manufacturer's data report required by Section VIII of the ASME Code (IBR, see § 171.7 of this subchapter) under which the tank is fabricated shall be furnished to the owner for each new tank.

* * * * *

■ 86. In § 178.255–1, paragraph (b) is revised to read as follows:

§ 178.255–1 General requirements.

* * * * *

(b) Tanks must be designed, constructed, certified, and stamped in accordance with Section VIII of the ASME Code (IBR, see § 171.7 of this subchapter).

* * * * *

■ 87. In § 178.255–2, paragraph (a) is revised to read as follows:

§ 178.255–2 Material.

(a) Material used in the tank must be steel of good weldable quality and conform with the requirements in Sections V, VIII, and IX of the ASME Code (IBR, see § 171.7 of this subchapter).

* * * * *

■ 88. In § 178.255–14, paragraph (a) is revised to read as follows:

§ 178.255–14 Marking.

(a) In addition to markings required by Section VIII of the ASME Code (IBR, see § 171.7 of this subchapter), every tank shall bear permanent marks at least 1/8-inch high stamped into the metal near the center of one of the tank heads or stamped into a plate permanently attached to the tank by means of brazing or welding or other suitable means as follows: * * *

* * * * *

■ 89. In § 178.255–15, the first sentence in paragraph (a) is revised to read as follows:

§ 178.255–15 Report.

(a) A copy of the manufacturer's data report required by Section VIII of the ASME Code (IBR, see § 171.7 of this subchapter) under which the tank is fabricated must be furnished to the owner for each new tank. * * *

* * * * *

■ 90. In § 178.270–2, paragraph (c) is revised to read as follows:

§ 178.270–2 General.

* * * * *

(c) Each portable tank must have a cross-sectional design that is capable of being stress analyzed either mathematically or by the experimental method contained in UG–101 in Section VIII of the ASME Code (IBR, see § 171.7 of this subchapter), or other method acceptable to the Associate Administrator.

* * * * *

■ 91. In § 178.270–3, paragraphs (a), (b)(1), and the last three sentences of paragraph (e) are revised to read as follows:

§ 178.270–3 Materials of construction.

(a) Each portable tank must be constructed of carbon or alloy steels. Materials included in part UHT in Section VIII of the ASME Code (IBR, see § 171.7 of this subchapter) or equivalent materials are not authorized. Any materials used in the tank shell must conform to a recognized national standard and must be suitable for the external environments in which the tank will be carried. The minimum elongation for any material must be 20 percent or greater.

(b) * * *

(1) 1.5 times the specified values for the material at 93 °C (200 °F) in Section VIII of the ASME Code;

* * * * *

(e) * * * Tensile tests and analysis of results must be in accordance with ISO 82, ''Steels-Tensile Testing'' (IBR, see § 171.7 of this subchapter). The yield strength in tension shall be the stress corresponding to a permanent strain of 0.2 percent of the gauge length, except that for high alloy austenitic steels the yield strength shall be the stress corresponding to a permanent strain of 0.2 or 1.0 percent of the gauge length as appropriate. The elongation must be at least 20 percent.

* * * * *

■ 92. Section 178.270–7 is revised to read as follows:

§ 178.270–7 Joints in tank shells.

Joints in tank shells must be made by fusion welding. Such joints and their efficiencies must be as required by Section VIII of the ASME Code (IBR, see § 171.7 of this subchapter). Weld procedures and welder performance must be ASME Code qualified or must be qualified by the approval agency in accordance with the procedures in the ASME Code, Section IX, Welding and Brazing Qualifications. A record of each qualification must be retained by the manufacturer for the period prescribed in Section VIII of the ASME Code, and must be made available to any duly identified representative of the Department and the owner of the tank.

■ 93. Section 178.270–9 is revised to read as follows:

§ 178.270–9 Inspection openings.

Each portable tank must be fitted with a manhole or other inspection opening sited above the maximum liquid level to allow for complete internal inspection and adequate access for maintenance and repair of the interior. Each portable tank with a capacity of more than 1,894

L (500 gallons) must be fitted with an elliptical or round manhole at least 279 × 381 mm (11 × 15 inches), or 254 × 405 mm (10 × 16 inches), or with a circular manhole at least 381 mm (15 inches) in diameter. Any inspection opening and closure must be designed and reinforced as required by Section VIII of the ASME Code (IBR, see § 171.7 of this subchapter).

■ 94. In § 178.270–11, paragraph (d)(6) introductory text is revised to read as follows:

§ 178.270–11 Pressure and vacuum relief devices.

* * * * *

(d) * * *

(6) The flow capacity rating of any pressure relief device must be certified by the manufacturer to be in accordance with the applicable provisions in Section VIII of the ASME Code (IBR, see § 171.7 of this subchapter) with the following exceptions:

* * * * *

■ 95. In § 178.270–12, paragraph (f) is revised to read as follows:

§ 178.270–12 Valves, nozzles, piping, and gauging devices.

* * * * *

(f) All nozzles and tank shell penetrations for nozzles shall be designed and constructed in accordance with Section VIII of the ASME Code (IBR, see § 171.7 of this subchapter).

* * * * *

■ 96. In § 178.271–1, paragraph (c) is revised to read as follows:

§ 178.271–1 General requirements.

* * * * *

(c) Each tank shall be designed and constructed in accordance with the requirements in Section VIII of the ASME Code (IBR, see § 171.7 of this subchapter) except as limited or modified in this section or in § 178.270 of this subpart. ASME certification or stamp is not required.

■ 97. In § 178.272–1, paragraph (c) is revised to read as follows:

§ 178.272–1 General requirements.

* * * * *

(c) Each tank shall be designed and constructed in accordance with the requirements in Section VIII of the ASME Code (IBR, see § 171.7 of this subchapter) except as limited or modified in this section or in § 178.270 of this subpart. ASME certification or stamp is not required.

■ 98. In § 178.273, paragraph (b)(6)(i) is revised to read as follows:

§ 178.273 Approval of Specification IM portable tanks and UN portable tanks.

* * * * *

(b) * * *

(6) * * *

(i) The portable tank has been designed, constructed, certified, and stamped in accordance with the requirements in Division 1 of Section VIII of the ASME Code (IBR, see § 171.7 of this subchapter). Other design codes may be used if approved by the Associate Administrator (see § 178.274(b)(1));

* * * * *

■ 99. In § 178.274, the definitions for Fine grain steel and Off-shore portable tank in paragraph (a)(3), the first four sentences in paragraph (b)(1), and paragraphs (c)(5), (c)(11), (d)(1)(ii), (d)(3), (f)(1)(v), (h)(5)(iv), (i)(1) introductory text, and (j)(6) are revised to read as follows:

§ 178.274 Specifications for UN portable tanks.

(a) * * *

(3) * * *

Fine grain steel means steel that has a ferritic grain size of 6 or finer when determined in accordance with ASTM E 112–96 (IBR, see § 171.7 of this subchapter).

* * * * *

Offshore portable tank means a portable tank specially designed for repeated use in the transportation of hazardous materials to, from and between offshore facilities. An offshore portable tank is designed and constructed in accordance with the Guidelines for the Approval of Containers Handled in Open Seas specified in the IMDG Code (IBR, see § 171.7 of this subchapter).

(b) * * *

(1) The design temperature range for the shell must be -40 °C to -50 °C (-40 °F to 122 °F) for hazardous materials transported under normal conditions of transportation, except for portable tanks used for refrigerated liquefied gases where the minimum design temperature must not be higher than the lowest (coldest) temperature (for example, service temperature) of the contents during filling, discharge or transportation. For hazardous materials handled under elevated temperature conditions, the design temperature must not be less than the maximum temperature of the hazardous material during filling, discharge or transportation. More severe design temperatures must be considered for portable tanks subjected to severe climatic conditions (for example, portable tanks transported in arctic regions). Shells must be designed and constructed in accordance with the requirements in Section VIII of the ASME Code (IBR, see § 171.7 of this subchapter), except as limited or modified in this subchapter. * * *

* * * * *

(c) * * *

(5) For shells of portable tanks used for liquefied compressed gases, the shell must consist of a circular cross section. Shells must be of a design capable of being stress-analyzed mathematically or experimentally by resistance strain gauges as specified in UG–101 of Section VIII of the ASME Code, or other methods approved by the Associate Administrator.

* * * * *

(11) For the purpose of determining actual values for materials for sheet metal, the axis of the tensile test specimen must be at right angles (transversely) to the direction of rolling. The permanent elongation at fracture must be measured on test specimens of rectangular cross sections in accordance with ISO 6892 (IBR, see § 171.7 of this subchapter), using a 50 mm gauge length.

(d) * * *

(1) * * *

(ii) the minimum thickness determined in accordance with Section VIII of the ASME Code or other approved pressure vessel code; or

* * * * *

(3) When additional protection against shell damage is provided in the case of portable tanks used for liquid and solid hazardous materials requiring test pressures less than 2.65 bar (265.0 kPa), subject to certain limitations specified in the UN Recommendations (IBR, see § 171.7 of this subchapter), the Associate Administrator may approve a reduced minimum shell thickness.

* * * * *

(f) * * *

(1) * * *

(v) the rated flow capacity of the device in standard cubic meters of air per second (m^3/s) determined according to ISO 4126–1 (IBR, see § 171.7 of this subchapter); and

* * * * *

(h) * * *

(5) * * *

(iv) Protection of the shell against damage from impact or overturning by use of an ISO frame in accordance with ISO 1496–3 (IBR, see § 171.7 of this subchapter); and

* * * * *

(i) * * *

(1) Every portable tank must be fitted with a corrosion resistant metal plate

permanently attached to the portable tank in a conspicuous place and readily accessible for inspection. When the plate cannot be permanently attached to the shell, the shell must be marked with at least the information required by Section VIII of the ASME Code. At a minimum, the following information must be marked on the plate by stamping or by any other equivalent method: * * *

* * * * *

(j) * * *

(6) A UN portable tank that meets the definition of ''container'' in the CSC (see 49 CFR 450.3(a)(2)) must be subjected to an impact test using a prototype representing each design type. The prototype portable tank must be shown to be capable of absorbing the forces resulting from an impact not less than 4 times (4 g) the maximum permissible gross mass of the fully loaded portable tank at a duration typical of the mechanical shocks experienced in rail transportation. A listing of standards describing methods acceptable for performing the impact test are provided in the UN Recommendations. UN portable tanks used for the dedicated transportation of ''Helium, refrigerated liquid,'' UN1963 and ''Hydrogen, refrigerated liquid,'' UN1966 that are marked ''NOT FOR RAIL TRANSPORT'' in letters of a minimum height of 10 cm (4 inches) on at least two sides of the portable tank are excepted from the 4 g impact test.

* * * * *

■ 100. In § 178.276, the last sentence in paragraph (f) is revised to read as follows:

§ 178.276 Requirements for the design, construction, inspection and testing of portable tanks intended for the transportation of non-refrigerated liquefied compressed gases.

* * * * *

(f) * * * For gases that have critical temperatures near or below the temperature at the accumulating condition, the calculation of the pressure relief device delivery capacity must consider the additional thermodynamic properties of the gas, for example see CGA S–1.2 (IBR, see § 171.7 of this subchapter).

■ 101. In § 178.277, paragraphs (b)(2) and (b)(13) are revised to read as follows:

§ 178.277 Requirements for the design, construction, inspection and testing of portable tanks intended for the transportation of refrigerated liquefied gases.

(b) * * *

(2) Portable tanks must be postweld heat treated and radiographed as prescribed in Sections V and VIII of the ASME Code except that each tank constructed in accordance with part UHT in Section VIII of the ASME Code must be postweld heat treated. Where postweld heat treatment is required, the tank must be treated as a unit after completion of all the welds to the shell and heads. The method must be as prescribed in the ASME Code. Welded attachments to pads may be made after postweld heat treatment is made. The postweld heat treatment must be as prescribed in Section VIII of the ASME Code, but in no event at less than 1,050 °F tank metal temperature.

* * * * *

(13) The jacket of a vacuum-insulated double-wall tank must have either an external design pressure not less than 100 kPa (1 bar) gauge pressure calculated in accordance with Section VIII of the ASME Code or a calculated critical collapsing pressure of not less than 200 kPa (2 bar) gauge pressure. Internal and external reinforcements may be included in calculating the ability of the jacket to resist the external pressure.

* * * * *

■ 102. In § 178.320, in paragraph (a) the definitions for ''Constructed and certified in accordance with the ASME Code,'' ''Constructed in accordance with the ASME Code,'' and ''Maximum allowable working pressure or MAWP'' are revised to read as follows:

§ 178.320 General requirements applicable to all DOT specification cargo tank motor vehicles.

(a) * * *

Constructed and certified in accordance with the ASME Code means a cargo tank is constructed and stamped in accordance with Section VIII of the ASME Code (IBR, see § 171.7 of this subchapter), and is inspected and certified by an Authorized Inspector.

Constructed in accordance with the ASME Code means a cargo tank is constructed in accordance with Section VIII of the ASME Code with authorized exceptions (see §§ 178.346 through 178.348) and is inspected and certified by a Registered Inspector.

* * * * *

Maximum allowable working pressure or *MAWP* means the maximum pressure allowed at the top of the tank in its normal operating position. The MAWP must be calculated as prescribed in Section VIII of the ASME Code. In use, the MAWP must be greater than or equal to the maximum lading pressure conditions prescribed in § 173.33 of this subchapter for each material transported.

* * * * *

■ 103. In § 178.337–1, paragraphs (a)(2) and (f) are revised to read as follows:

§ 178.337–1 General requirements.

(a) * * *

(2) Designed, constructed, certified, and stamped in accordance with Section VIII of the ASME Code (IBR, see § 171.7 of this subchapter);

* * * * *

(f) *Postweld heat treatment*. Postweld heat treatment must be as prescribed in the ASME Code except that each cargo tank constructed in accordance with Part UHT of Section VIII of the ASME Code must be postweld heat treated. Each chlorine cargo tank must be fully radiographed and postweld heat treated in accordance with the provisions in Section VIII of the ASME Code under which it is constructed. Where postweld heat treatment is required, the cargo tank must be treated as a unit after completion of all the welds in and/or to the shells and heads. The method must be as prescribed in Section VIII of the ASME Code. Welded attachments to pads may be made after postweld heat treatment. A cargo tank used for anhydrous ammonia must be postweld heat treated. The postweld heat treatment must be as prescribed in Section VIII of the ASME Code, but in no event at less than 1,050 § F cargo tank metal temperature.

* * * * *

■ 104. In § 178.337–2, paragraph (a)(1), the first sentence in paragraph (a)(2), and paragraphs (b)(1)(i), (b)(2)(i), and (b)(2)(ii) are revised to read as follows:

§ 178.337–2 Material.

(a) * * *

(1) All material used for construction of the cargo tank and appurtenances must be suitable for use with the commodities to be transported therein and must conform to the requirements in Section II of the ASME Code (IBR, see § 171.7 of this subchapter) and/or requirements of the American Society for Testing and Materials in all respects.

(2) Impact tests are required on steel used in the fabrication of each cargo tank constructed in accordance with part UHT in Section VIII of the ASME Code. * * *

* * * * *

(b) * * *

(1) * * *

(i) Material shall conform to ASTM A 300, ''Steel Plates for Pressure Vessels for Service at Low Temperatures'' (IBR, see § 171.7 of this subchapter); * * *

* * * * *

(2) * * *

(i) Material shall conform to ASTM A 612 (IBR, see § 171.7 of this subchapter), Grade B or A 516/A 516M (IBR, see § 171.7 of this subchapter), Grade 65 or 70;

(ii) Material shall meet the Charpy V-notch test requirements of ASTM A 20/A 20M (IBR, see § 171.7 of this subchapter); and

* * * * *

■ 105. In § 178.337–3, paragraphs (a)(1), (b), the last sentence in paragraph (g)(2), and paragraph (g)(3)(i) are revised to read as follows:

§ 178.337–3 Structural integrity.

(a) * * *

(1) Except as provided in paragraph (d) of this section, the maximum calculated design stress at any point in the cargo tank may not exceed the maximum allowable stress value prescribed in Section VIII of the ASME Code (IBR, see § 171.7 of this subchapter), or 25 percent of the tensile strength of the material used.

* * * * *

(b) *Static design and construction.* (1) The static design and construction of each cargo tank must be in accordance with Section VIII of the ASME Code. The cargo tank design must include calculation of stresses generated by design pressure, the weight of lading, the weight of structure supported by the cargo tank wall, and the effect of temperature gradients resulting from lading and ambient temperature extremes. When dissimilar materials are used, their thermal coefficients must be used in calculation of thermal stresses.

(2) Stress concentrations in tension, bending and torsion which occur at pads, cradles, or other supports must be considered in accordance with appendix G in Section VIII of the ASME Code.

* * * * *

(g) * * *

(2) * * * Attachments meeting the requirements of this paragraph are not authorized for cargo tanks constructed under part UHT in Section VIII of the ASME Code.

(3) * * *

(i) Be fabricated from material determined to be suitable for welding to both the cargo tank material and the material of the appurtenance or structural support member; a Design Certifying Engineer must make this determination considering chemical and physical properties of the materials and must specify filler material conforming to the requirements in Section VIII of the ASME Code (IBR, see § 171.7 of this subchapter).

* * * * *

■ 106. In § 178.337–4, paragraph (a), the first three sentences in paragraph (b), and paragraph (e) are revised to read as follows:

§ 178.337–4 Joints.

(a) Joints shall be as required in Section VIII of the ASME Code (IBR, see § 171.7 of this subchapter), with all undercutting in shell and head material repaired as specified therein.

(b) Welding procedure and welder performance must be in accordance with Section IX of the ASME Code. In addition to the essential variables named therein, the following must be considered as essential variables: Number of passes; thickness of plate; heat input per pass; and manufacturer's identification of rod and flux. When fabrication is done in accordance with part UHT in Section VIII of the ASME Code, filler material containing more than 0.08 percent vanadium must not be used. * * *

* * * * *

(e) The maximum tolerance for misalignment and butting up shall be in accordance with the requirement in Section VIII of the ASME Code.

* * * * *

■ 107. In § 178.337–6, paragraph (a) is revised to read as follows:

§ 178.337–6 Closure for manhole.

(a) Each cargo tank marked or certified after April 21, 1994, must be provided with a manhole conforming to paragraph UG–46(g)(1) and other applicable requirements in Section VIII of the ASME Code (IBR, see § 171.7 of this subchapter), except that a cargo tank constructed of NQT steel having a capacity of 3,500 water gallons or less may be provided with an inspection opening conforming to paragraph UG–46 and other applicable requirements of the ASME Code instead of a manhole.

* * * * *

■ 108. In § 178.337–8, paragraphs (b)(1) and (b)(2) are revised to read as follows:

§ 178.337–8 Openings, inlets, and outlets.

* * * * *

(b) * * *

(1) A valve conforming to The Chlorine Institute, Inc., Dwg. 101–7 (IBR, see § 171.7 of this subchapter), must be installed under each liquid angle valve.

(2) A valve conforming to The Chlorine Institute, Inc., Dwg. 106–6 (IBR, see § 171.7 of this subchapter), must be installed under each gas angle valve.

* * * * *

■ 109. In § 178.337–9, paragraph (b)(8) is revised to read as follows:

§ 178.337–9 Pressure relief devices, piping, valves, hoses, and fittings.

* * * * *

(b) * * *

(8) *Chlorine cargo tanks.* Angle valves on cargo tanks intended for chlorine service must conform to the standards of The Chlorine Institute, Inc., Dwg. 104–8 (IBR, see § 171.7 of this subchapter). Before installation, each angle valve must be tested for leakage at not less than 225 psig using dry air or inert gas.

* * * * *

■ 110. In § 178.337–10, paragraph (d)(1) is revised to read as follows:

§ 178.337–10 Accident damage protection.

(d) * * *

(1) Tanks manufactured on or before December 31, 1974: Dwg. 137–1 (IBR, see § 171.7 of this subchapter), or Dwg. 137–2 (IBR, see § 171.7 of this subchapter).

* * * * *

■ 111. In § 178.337–16, paragraphs (a), (b)(1), and (b)(2) are revised to read as follows:

§ 178.337–16 Testing.

(a) *Inspection and tests.* Inspection of materials of construction of the cargo tank and its appurtenances and original test and inspection of the finished cargo tank and its appurtenances must be as required by Section VIII of the ASME Code (IBR, see § 171.7 of this subchapter) and as further required by this specification, except that for cargo tanks constructed in accordance with part UHT in Section VIII of the ASME Code the original test pressure must be at least twice the cargo tank design pressure.

(b) * * *

(1) Each cargo tank constructed in accordance with part UHT in Section VIII of the ASME Code must be subjected, after postweld heat treatment and hydrostatic tests, to a wet fluorescent magnetic particle inspection to be made on all welds in or on the cargo tank shell and heads both inside and out. The method of inspection must conform to appendix 6 in Section VIII of the ASME Code except that permanent magnets shall not be used.

(2) On cargo tanks of over 3,500 gallons water capacity other than those described in paragraph (b)(1) of this section unless fully radiographed, a test must be made of all welds in or on the shell and heads both inside and outside

by either the wet fluorescent magnetic particle method conforming to appendix U in Section VIII of the ASME Code, liquid dye penetrant method, or ultrasonic testing in accordance with appendix 12 in Section VIII of the ASME Code. Permanent magnets must not be used to perform the magnetic particle inspection.

* * * * *

■ 112. In § 178.337–18, paragraph (a) introductory text is revised to read as follows:

§ 178.337–18 Certification.

(a) At or before the time of delivery, the cargo tank motor vehicle manufacturer must supply and the owner must obtain, a cargo tank motor vehicle manufacturer's data report as required by Section VIII of the ASME Code (IBR, see § 171.7 of this subchapter), and a certificate stating that the completed cargo tank motor vehicle conforms in all respects to Specification MC 331 and the ASME Code. The registration numbers of the manufacturer, the Design Certifying Engineer, and the Registered Inspector, as appropriate, must appear on the certificates (see subpart F, part 107 in subchapter A of this chapter).

* * * * *

■ 113. In § 178.338–1, paragraphs (a)(1) and (c) are revised to read as follows:

§ 178.338–1 General requirements.

(a) * * *

(1) *Design pressure* means the ''MAWP'' as used in Section VIII of the ASME Code (IBR, see § 171.7 of this subchapter), and is the gauge pressure at the top of the tank.

* * * * *

(c) Each tank must be designed, constructed, certified, and stamped in accordance with Section VIII of the ASME Code.

* * * * *

■ 114. In § 178.338–2, paragraphs (a), (c), and (e) are revised to read as follows:

§ 178.338–2 Material.

(a) All material used in the construction of a tank and its appurtenances that may come in contact with the lading must be compatible with the lading to be transported. All material used for tank pressure parts must conform to the requirements in Section II of the ASME Code (IBR, see § 171.7 of this subchapter). All material used for evacuated jacket pressure parts must conform to the chemistry and steelmaking practices of one of the material specifications in Section II of the ASME Code or the following ASTM Specifications: A 242, A 441, A 514, A 572, A 588, A 606, A 607, A 633, A 715 (IBR, see § 171.7 of this subchapter).

* * * * *

(c) Impact tests are required on all tank materials, except materials that are excepted from impact testing by the ASME Code, and must be performed using the procedure prescribed in Section VIII of the ASME Code.

* * * * *

(e) Each tank constructed in accordance with part UHT in Section VIII of the ASME Code must be postweld heat treated as a unit after completion of all welds to the shell and heads. Other tanks must be postweld heat treated as required in Section VIII of the ASME Code. For all tanks the method must be as prescribed in the ASME Code. Welded attachments to pads may be made after postweld heat treatment.

* * * * *

■ 115. In § 178.338–3, paragraph (b), the last sentence in paragraph (g)(2), and paragraph (g)(3)(i) are revised to read as follows:

§ 178.338–3 Structural integrity.

* * * * *

(b) *Static design and construction.* (1) The static design and construction of each tank must be in accordance with appendix G in Section VIII of the ASME Code (IBR, see § 171.7 of this subchapter). The tank design must include calculation of stress due to the design pressure, the weight of lading, the weight of structures supported by the tank wall, and the effect of temperature gradients resulting from lading and ambient temperature extremes. When dissimilar materials are used, their thermal coefficients must be used in calculation of the thermal stresses.

(2) Stress concentrations in tension, bending, and torsion which occur at pads, cradles, or other supports must be considered in accordance with appendix G in Section VIII of the ASME Code.

* * * * *

(g) * * *

(2) * * * Attachments meeting the requirements of this paragraph are not authorized for cargo tanks constructed under part UHT in Section VIII of the ASME Code.

* * * * *

(3) * * *

(i) Be fabricated from material determined to be suitable for welding to both the cargo tank material and the material of the appurtenance or structural support member; a Design Certifying Engineer must make this determination considering chemical and physical properties of the materials and must specify filler material conforming to the requirements in Section IX of the ASME Code (IBR, see § 171.7 of this subchapter).

■ 116. In § 178.338–4, paragraph (a) is revised to read as follows:

§ 178.338–4 Joints.

(a) All joints in the tank, and in the jacket if evacuated, must be as prescribed in Section VIII of the ASME Code (IBR, see § 171.7 of this subchapter), except that a butt weld with one plate edge offset is not authorized.

* * * * *

■ 117. In § 178.338–5, paragraph (a) is revised to read as follows:

§ 178.338–5 Stiffening rings.

(a) A tank is not required to be provided with stiffening rings, except as prescribed in Section VIII of the ASME Code (IBR, see § 171.7 of this subchapter).

* * * * *

■ 118. In § 178.338–6, paragraph (a) is revised to read as follows:

§ 178.338–6 Manholes.

(a) Each tank in oxygen service must be provided with a manhole as prescribed in Section VIII of the ASME Code (IBR, see § 171.7 of this subchapter).

* * * * *

■ 119. In § 178.338–13, the last three sentences in paragraph (a) introductory text and the last two sentences in paragraph (b) introductory text are revised to read as follows:

§ 178.338–13 Supports and anchoring.

* * * * *

(a) * * * The design calculations for the supports and load-bearing tank or jacket, and the support attachments must include beam stress, shear stress, torsion stress, bending moment, and acceleration stress for the loaded vehicle as a unit, using a safety factor of four, based on the tensile strength of the material, and static loading that uses the weight of the cargo tank and its attachments when filled to the design weight of the lading (see appendix G in Section VIII of the ASME Code) (IBR, see § 171.7 of this subchapter), multiplied by the following factors. The effects of fatigue must also be considered in the calculations. Minimum static loadings must be as follows:

(b) * * * Static loadings must take into consideration the weight of the tank and the structural members when the tank is filled to the design weight of

lading (see appendix G in Section VIII of the ASME Code), multiplied by the following factors. When load rings in the jacket are used for supporting the tank, they must be designed to carry the fully loaded tank at the specified static loadings, plus external pressure. Minimum static loadings must be as follows:

* * * * *

■ 120. In § 178.338–15 is revised to read as follows:

§ 178.338–15 Cleanliness.

A cargo tank constructed for oxygen service must be thoroughly cleaned to remove all foreign material in accordance with CGA G–4.1 (IBR, see § 171.7 of this subchapter). All loose particles from fabrication, such as weld beads, dirt, grinding wheel debris, and other loose materials, must be removed prior to the final closure of the manhole of the tank. Chemical or solvent cleaning with a material compatible with the intending lading must be performed to remove any contaminants likely to react with the lading.

■ 121. In § 178.338–16, paragraph (a), the first sentence in paragraph (c), and paragraph (d) are revised to read as follows:

§ 178.338–16 Inspection and testing.

(a) *General*. The material of construction of a tank and its appurtenances must be inspected for conformance to Section VIII of the ASME Code (IBR, see § 171.7 of this subchapter). The tank must be subjected to either a hydrostatic or pneumatic test. The test pressure must be one and one-half times the sum of the design pressure, plus static head of lading, plus 101.3 kPa (14.7 psi) if subjected to external vacuum, except that for tanks constructed in accordance with Part UHT in Section VIII of the ASME Code the test pressure must be twice the design pressure.

* * * * *

(c) *Weld inspection*. All tank shell or head welds subject to pressure shall be radiographed in accordance with Section VIII of the ASME Code. * * *

(d) *Defect repair*. All cracks and other defects must be repaired as prescribed in Section VIII of the ASME Code. The welder and the welding procedure must be qualified in accordance with Section IX of the ASME Code (IBR, see § 171.7 of this subchapter). After repair, the tank must again be postweld heat-treated, if such heat treatment was previously performed, and the repaired areas must be retested.

* * * * *

■ 122. In § 178.338–17, paragraph (b) is revised to read as follows:

§ 178.338–17 Pumps and compressors.

* * * * *

(b) A valve or fitting made of aluminum with internal rubbing or abrading aluminum parts that may come in contact with oxygen (cryogenic liquid) may not be installed on any cargo tank used to transport oxygen (cryogenic liquid) unless the parts are anodized in accordance with ASTM B 580 (IBR, see § 171.7 of this subchapter).

■ 123. In § 178.338–18, paragraphs (a)(1) and (a)(3) are revised to read as follows:

§ 178.338–18 Marking.

(a) * * *

(1) The plates must be legibly marked by stamping, embossing, or other means of forming letters into the metal of the plate, with the information required in paragraphs (b) and (c) of this section, in addition to that required by Section VIII of the ASME Code (IBR, see § 171.7 of this subchapter), in characters at least 3/16 inch high (parenthetical abbreviations may be used). All plates must be maintained in a legible condition.

* * * * *

(3) The information required for both the name and specification plate may be displayed on a single plate. If the information required by this section is displayed on a plate required by Section VIII of the ASME Code, the information need not be repeated on the name and specification plates.

* * * * *

■ 124. In § 178.338–19, paragraph (a)(1) is revised to read as follows:

§ 178.338–19 Certification.

(a) * * *

(1) The tank manufacturer's data report as required by the ASME Code (IBR, see § 171.7 of this subchapter), and a certificate bearing the manufacturer's vehicle serial number stating that the completed cargo tank motor vehicle conforms to all applicable requirements of Specification MC 338, including Section VIII of the ASME Code (IBR, see § 171.7 of this subchapter) in effect on the date (month, year) of certification. The registration numbers of the manufacturer, the Design Certifying Engineer, and the Registered Inspector, as appropriate, must appear on the certificates (see subpart F, part 107 in subchapter B of this chapter).

* * * * *

■ 125. In § 178.345–1, paragraph (f) is revised to read as follows:

§ 178.345–1 General requirements.

* * * * *

(f) Each cargo tank must be designed and constructed in conformance with the requirements of the applicable cargo tank specification. Each DOT 412 cargo tank with a ''MAWP'' greater than 15 psig, and each DOT 407 cargo tank with a maximum allowable working pressure greater than 35 psig must be ''constructed and certified in conformance with Section VIII of the ASME Code'' (IBR, see § 171.7 of this subchapter) except as limited or modified by the applicable cargo tank specification. Other cargo tanks must be ''constructed in accordance with Section VIII of the ASME Code,'' except as limited or modified by the applicable cargo tank specification.

* * * * *

■ 126. In § 178.345–2, paragraph (a) introductory text and paragraph (a)(1) are revised to read as follows:

§ 178.345–2 Material and material thickness.

(a) All material for shell, heads, bulkheads, and baffles must conform to Section II of the ASME Code (IBR, see § 171.7 of this subchapter) except as follows:

(1) The following steels are also authorized for cargo tanks ''constructed in accordance with the ASME Code'', Section VIII.

* * * * *

■ 127. In § 178.345–3, paragraphs (a)(1), (b), (b)(1), and (b)(2) are revised to read as follows:

§ 178.345–3 Structural integrity.

(a) * * *

(1) The maximum calculated design stress at any point in the cargo tank wall may not exceed the maximum allowable stress value prescribed in Section VIII of the ASME Code (IBR, see § 171.7 of this subchapter), or 25 percent of the tensile strength of the material used at design conditions.

* * * * *

(b) *ASME Code design and construction*. The static design and construction of each cargo tank must be in accordance with Section VIII of the ASME Code. The cargo tank design must include calculation of stresses generated by the MAWP, the weight of the lading, the weight of structures supported by the cargo tank wall and the effect of temperature gradients resulting from lading and ambient temperature extremes. When dissimilar materials are used, their thermal coefficients must be used in the calculation of thermal stresses.

(1) Stress concentrations in tension, bending and torsion which occur at pads, cradles, or other supports must be considered in accordance with appendix G in Section VIII of the ASME Code.

(2) Longitudinal compressive buckling stress for ASME certified vessels must be calculated using paragraph UG–23(b) in Section VIII of the ASME Code. For cargo tanks not required to be certified in accordance with the ASME Code, compressive buckling stress may be calculated using alternative analysis methods which are accurate and verifiable. When alternative methods are used, calculations must include both the static loads described in this paragraph and the dynamic loads described in paragraph (c) of this section.

* * * * *

■ 128. In § 178.345–4, paragraph (a) is revised to read as follows:

§ 178.345–4 Joints.

(a) All joints between the cargo tank shell, heads, baffles, baffle attaching rings, and bulkheads must be welded in conformance with Section VIII of the ASME Code (IBR, see § 171.7 of this subchapter).

* * * * *

■ 129. In § 178.345–7, paragraphs (a)(1) and (d)(3) are revised to read as follows:

§ 178.345–7 Circumferential reinforcements.

(a) * * *

(1) Circumferential reinforcement must be located so that the thickness and tensile strength of the shell material in combination with the frame and reinforcement produces structural integrity at least equal to that prescribed in § 178.345–3 and in such a manner that the maximum unreinforced portion of the shell does not exceed 60 inches. For cargo tanks designed to be loaded by vacuum, spacing of circumferential reinforcement may exceed 60 inches provided the maximum unreinforced portion of the shell conforms with the requirements in Section VIII of the ASME Code (IBR, see § 171.7 of this subchapter).

* * * * *

(d) * * *

(3) When used to meet the vacuum requirements of this section, ring stiffeners must be as prescribed in Section VIII of the ASME Code.

* * * * *

■ 130. In § 178.345–14, the first sentence of paragraph (a) is revised to read as follows:

§ 178.345–14 Marking.

(a) *General.* The manufacturer shall certify that each cargo tank motor vehicle has been designed, constructed and tested in accordance with the applicable Specification DOT 406, DOT 407 or DOT 412 (§§ 178.345, 178.346, 178.347, 178.348) cargo tank requirements and, when applicable, with Section VIII of the ASME Code (IBR, see § 171.7 of this subchapter).

* * *

* * * * *

■ 131. In § 178.345–15, paragraph (b)(2) is revised to read as follows:

§ 178.345–15 Certification.

* * * * *

(b) * * *

(2) For each ASME cargo tank, a cargo tank manufacturer's data report as required by Section VIII of the ASME Code (IBR, see § 171.7 of this subchapter). For each cargo tank motor vehicle, a certificate signed by a responsible official of the manufacturer and a Registered Inspector certifying that the cargo tank motor vehicle is constructed, tested and completed in conformance with the applicable specification.

* * * * *

■ 132. In § 178.346–1, paragraphs (d), (d)(1), (d)(8), and (d)(10) are revised to read as follows:

§ 178.346–1 General requirements.

* * * * *

(d) Each cargo tank must be ''constructed in accordance with Section VIII of the ASME Code'' (IBR, see § 171.7 of this subchapter) except as modified herein:

(1) The record-keeping requirements contained in the ASME Code Section VIII do not apply. Parts UG–90 through 94 in Section VIII do not apply. Inspection and certification must be made by an inspector registered in accordance with subpart F of part 107.

* * * * *

(8) The following paragraphs in parts UG and UW in Section VIII of the ASME Code do not apply: UG–11, UG–12, UG–22(g), UG–32(e), UG–34, UG–35, UG–44, UG–76, UG–77, UG–80, UG–81, UG–96, UG–97, UW–13(b)(2), UW–13.1(f) and the dimensional requirements found in Figure UW–13.1.

* * * * *

(10) The requirements of paragraph UW–9(d) in Section VIII of the ASME Code do not apply.

■ 133. In § 178.346–3, paragraph (b)(3) is revised to read as follows:

§ 178.346–3 Pressure relief.

* * * * *

(b) * * *

(3) Notwithstanding the requirements in § 178.345–10(b), after August 31, 1996, each pressure relief valve must be able to withstand a dynamic pressure surge reaching 30 psig above the design set pressure and sustained above the set pressure for at least 60 milliseconds with a total volume of liquid released not exceeding 1 L before the relief valve recloses to a leak-tight condition. This requirement must be met regardless of vehicle orientation. This capability must be demonstrated by testing. TTMA RP No. 81 (IBR, see § 171.7 of this subchapter), cited at § 178.345–10(b)(3)(i), is an acceptable test procedure.

* * * * *

■ 134. In § 178.347–1, paragraphs (c), (d), (d)(1) and (d)(8) are revised to read as follows:

§ 178.347–1 General requirements.

* * * * *

(c) Any cargo tank built to this specification with a MAWP greater than 35 psig and each tank designed to be loaded by vacuum must be constructed and certified in conformance with Section VIII of the ASME Code (IBR, see § 171.7 of this subchapter). The external design pressure for a cargo tank loaded by vacuum must be at least 15 psi.

(d) Each cargo tank built to this specification with MAWP of 35 psig or less must be ''constructed in accordance with Section VIII of the ASME Code'' except as modified.

(1) The record-keeping requirements contained in Section VIII of the ASME Code do not apply. The inspection requirements of parts UG–90 through 94 do not apply. Inspection and certification must be made by an inspector registered in accordance with subpart F of part 107.

* * * * *

(8) The following paragraphs in parts UG and UW in Section VIII the ASME Code do not apply: UG–11, UG–12, UG–22(g), UG–32(e), UG–34, UG–35, UG–44, UG–76, UG–77, UG–80, UG–81, UG–96, UG–97, UW–12, UW–13(b)(2), UW–13.1(f), and the dimensional requirements found in Figure UW–13.1.

* * * * *

■ 135. In § 178.348–1, paragraphs (e)(1), (e)(2), (e)(2)(i) and (e)(2)(viii) are revised to read as follows:

§ 178.348–1 General requirements.

* * * * *

(e) * * *

(1) MAWP greater than 15 psig must be ''constructed and certified in conformance with Section VIII of the

ASME Code'' (IBR, see § 171.7 of this subchapter); or

(2) MAWP of 15 psig or less must be ''constructed in accordance with Section VIII of the ASME Code,'' except as modified herein:

(i) The recordkeeping requirements contained in Section VIII of the ASME Code do not apply. Parts UG–90 through 94 in Section VIII do not apply. Inspection and certification must be made by an inspector registered in accordance with subpart F of part 107.

* * * * *

(viii) The following paragraphs in parts UG and UW in Section VIII of the ASME Code do not apply: UG–11, UG–12, UG–22(g), UG–32(e), UG–34, UG–35, UG–44, UG–76, UG–77, UG–80, UG–81, UG–96, UG–97, UW–13(b)(2), UW–13.1(f), and the dimensional requirements found in Figure UW–13.1.

■ 136. In § 178.356–1, paragraph (e) is revised to read as follows:

§ 178.356–1 General requirements.

* * * * *

(e) Drawings in DOE CAPE–1662, Rev. 1 and Supplement 1 (IBR, see § 171.7 of this subchapter), which include bills of material, are a part of this specification.

* * * * *

■ 137. In § 178.356–2, paragraph (a) introductory text, and paragraphs (d) and (e) are revised to read as follows:

§ 178.356–2 Materials of construction and other requirements.

(a) Phenolic foam insulation must be fire-resistant and fabricated in accordance with USDOE Material and Equipment Specification SP–9, Rev. 1 and Supplement (IBR, see § 171.7 of this subchapter), which is a part of this specification. (Note: Packagings manufactured under USAEC Specification SP–9 and Rev. 1 thereto are authorized for continued manufacture and use.) A 13.7 cm (5.4-inch) minimum thickness of foam must be provided over the entire liner except:

* * * * *

(d) Vent holes 5 mm (0.2-inch) diameter must be drilled in the outer shell to provide pressure relief during the insulation foaming and in the event of a fire. These holes, which must be drilled in all areas of the shell that mate with the foam insulation, must be spaced in accordance with DOE CAPE–1662, Rev. 1 and Supplement 1 (IBR, see § 171.7 of this subchapter).

(e) Welding must be by a fusion welding process in accordance with American Welding Society Codes B–3.0 and D–1.0 (IBR, see § 171.7 of this subchapter). Body seams and joints for the liner or shell must be continuous welds.

* * * * *

■ 138. In § 178.358–1, paragraphs (a)(1) and (a)(2) are revised to read as follows:

§ 178.358–1 General requirements.

(a) * * *

(1) Specification 21PF–1 overpacks includes the series of 21PF–1, 21PF–1A, and 21PF–1B models. Details of the three models are included in DOE CAPE–1662, Rev. 1 and Supplement 1 (IBR, see § 171.7 of this subchapter).

(2) Drawings in CAPE–1662, Rev. 1 and Supplement 1, that include bills of materials, and KSS–471 (IBR, see § 171.7 of this subchapter), are a part of this specification.

* * * * *

■ 139. In § 178.358–2, paragraphs (a) introductory text, (b), and (f) are revised to read as follows:

§ 178.358–2 Materials of construction and other requirements.

(a) Phenolic foam insulation must be fire resistant and fabricated in accordance with USDOE Material and Equipment Specification SP–9, Rev. 1 and Supplement (IBR, see § 171.7 of this subchapter), which is a part of this specification. (Note: Packagings manufactured under USAEC Specification SP–9, and Rev. 1 thereto are authorized for continued manufacture and use.) A 14 cm (5.5-inch) minimum thickness of foam must be provided over the entire liner except where:

* * * * *

(b) Gaskets for inner liner, outer shell, or where otherwise specified in DOE CAPE–1662, Rev. 1 (IBR, see § 171.7 of this subchapter), must be as specified in DOE CAPE–1662, Rev. 1.

* * * * *

(f) Welding must be by a fusion process in accordance with the American Welding Society Codes B–3.0 and D–1.0 (IBR, see § 171.7 of this subchapter). Body seams and joints for the liner and shell must be continuous welds.

* * * * *

■ 140. In § 178.358–3, paragraphs (a) and (b)(5) are revised to read as follows:

§ 178.358–3 Modification of Specification 21PF–1 overpacks.

(a) Each Specification 21PF–1 overpack for which construction began or was completed before April 1, 1989, in conformance with drawing E–S–31536–J, Rev. 1 of DOE CAPE–1662 (IBR, see § 171.7 of this subchapter), must be modified in conformance with drawing S1E–31536–J1–D of DOE CAPE–1662, Rev. 1, Supplement 1, before April 1, 1991.

* * * * *

(b) * * *

(5) As an alternate moisture measurement, a calibrated moisture meter reading for 20 percent maximum water content may be used to indicate an end point in the drying cycle, which is detailed in report ''Renovation of DOT Specification 21PF–1 Protective Shipping Packages,'' Report No. K–2057, Revision 1, November 21, 1986, available from the USDOE and part of USDOE Report No. KSS–471 (IBR, see § 171.7 of this subchapter).

* * * * *

■ 141. In § 178.358–4, paragraph (a) is revised to read as follows:

§ 178.358–4 Construction of Specification 21PF–1B overpacks.

(a) Each Specification 21PF–1 overpack for which construction began after March 31, 1989, must meet the requirements of Specification 21PF–1B, in conformance with drawings E–S–31536–J–P, and S1E–31536–J2–B of DOE CAPE–1662, Rev. 1, Supplement 1 (IBR, see § 171.7 of this subchapter).

* * * * *

■ 142. In § 178.360–4, paragraphs (a)(2) and (a)(2)(i) are revised to read as follows:

§ 178.360–4 Closure devices.

(a) * * *

(2) An opening may be closed by a securely bolted flange and leak-tight gasket. Each flange must be welded or brazed to the body of the 2R vessel per (ANSI) Standard B16.5 or (AWWA) Standard C207–55, section 10 (IBR, see § 171.7 of this subchapter). A torque wrench must be used in securing the flange with a corresponding torque of no more than twice the force necessary to seal the selected gasket. Gasket material must be capable of withstanding up to 149 °C (300 °F) without loss of efficiency. The flange, whether of ferrous or nonferrous metal, must be constructed from the same metal as the vessel and must meet the dimensional and fabrication specifications for welded construction as follows:

(i) Pipe flanges described in Tables 13, 14, 16, 17, 19, 20, 22, 23, 25 and 26 of ANSI B16.5 (IBR, see § 171.7 of this subchapter).

* * * * *

■ 143. In § 178.503, paragraph (a)(9)(i) is revised to read as follows:

§ 178.503 Marking of packagings.

(a) * * *

(9) * * *

(i) Metal drums or jerricans must be marked with the nominal thickness of

the metal used in the body. The marked nominal thickness must not exceed the minimum thickness of the steel used by more than the thickness tolerance stated in ISO 3574 (IBR, see § 171.7 of this subchapter). (See appendix C of this part.) The unit of measure is not required to be marked. When the nominal thickness of either head of a metal drum is thinner than that of the body, the nominal thickness of the top head, body, and bottom head must be marked (*e.g.*, ''1.0–1.2–1.0'' or ''0.9–1.0–1.0'').

* * * * *

■ 144. In § 178.516, paragraph (b)(1) is revised to read as follows:

§ 178.516 Standards for fiberboard boxes.

* * * * *

(b) * * *

(1) Strong, solid or double-faced corrugated fiberboard (single or multi-wall) must be used, appropriate to the capacity and intended use of the box. The water resistance of the outer surface must be such that the increase in mass, as determined in a test carried out over a period of 30 minutes by the Cobb method of determining water absorption, is not greater than 155 g per square meter (0.0316 pounds per square foot)—see ISO 535 (IBR, see § 171.7 of this subchapter). Fiberboard must have proper bending qualities. Fiberboard must be cut, creased without cutting through any thickness of fiberboard, and slotted so as to permit assembly without cracking, surface breaks, or undue bending. The fluting of corrugated fiberboard must be firmly glued to the facings.

* * * * *

■ 145. In § 178.601, paragraph (g)(8) introductory text is revised to read as follows:

§ 178.601 General requirements.

(g) * * *

(8) For a steel drum with a capacity greater than 50 L (13 gallons) manufactured from low carbon, cold-rolled sheet steel meeting ASTM designations A 366/A 366M or A 568/A 568M variations in elements other than the following design elements are considered minor and do not constitute a different drum design type, or ''different packaging'' as defined in paragraph (c) of this section for which design qualification testing and periodic retesting are required. Minor variations authorized without further testing include changes in the identity of the supplier of component material made to the same specifications, or the original manufacturer of a DOT specification or UN standard drum to be remanufactured. A change in any one or more of the following design elements constitutes a different drum design type:

* * * * *

■ 146. In § 178.707, paragraph (c)(4)(iv)(A) is revised to read as follows:

§ 178.707 Standards for composite IBCs.

* * * * *

(c) * * *

(4) * * *

(iv) * * *

(A) Water resistance of the outer surface must be such that the increase in mass, as determined in a test carried out over a period of 30 minutes by the Cobb method of determining water absorption, is not greater than 155 grams per square meter (0.0316 pounds per square foot)—see ISO 535 (E) (IBR, see § 171.7 of this subchapter). Fiberboard must have proper bending qualities. Fiberboard must be cut, creased without cutting through any thickness of fiberboard, and slotted so as to permit assembly without cracking, surface breaks, or undue bending. The fluting of corrugated fiberboard must be firmly glued to the facings.

* * * * *

■ 147. In § 178.708, paragraphs (c)(2) introductory text and (c)(2)(i) are revised to read as follows:

§ 178.708 Standards for fiberboard IBCs.

* * * * *

(c) * * *

(2) Fiberboard IBCs must be constructed of strong, solid or double-faced corrugated fiberboard (single or multiwall) that is appropriate to the capacity of the outer packaging and its intended use. Water resistance of the outer surface must be such that the increase in mass, as determined in a test carried out over a period of 30 minutes by the Cobb method of determining water absorption, is not greater than 155 grams per square meter (0.0316 pounds per square foot)—see ISO 535 (E) (IBR, see § 171.7 of this subchapter). Fiberboard must have proper bending qualities. Fiberboard must be cut, creased without cutting through any thickness of fiberboard, and slotted so as to permit assembly without cracking, surface breaks, or undue bending. The fluting of corrugated fiberboard must be firmly glued to the facings.

(i) The walls, including top and bottom, must have a minimum puncture resistance of 15 Joules (11 foot-pounds of energy) measured according to ISO 3036 (IBR, see § 171.7 of this subchapter).

* * * * *

■ 148. In § 178.801, paragraph (i) is revised to read as follows:

§ 178.801 General requirements.

* * * * *

(i) *Approval of equivalent packagings.* An IBC that differs from the standards in subpart N of this part, or that is tested using methods other than those specified in this subpart, may be used if approved by the Associate Administrator. Such IBCs must be shown to be equally effective, and testing methods used must be equivalent. A large packaging, as defined in § 171.8 of this subchapter, may be used if approved by the Associate Administrator. The large packaging must conform to the construction standards, performance testing and packaging marking requirements specified in the UN Recommendations (IBR, see § 171.7 of this subchapter).

* * * * *

■ 149. In Appendix A to Part 178, footnote 2 in Table 1 is revised to read as follows:

Appendix A to Part 178—Specifications for Steel

* * * * *

Table 1 * * *

[2] Ferritic grain size 6 or finer according to ASTM E 112–96 (IBR, see § 171.7 of this subchapter).

* * * * *

■ 150. In Appendix C to Part 178, the introductory paragraph is revised to read as follows:

Appendix C to Part 178—Nominal and Minimal Thicknesses of Steel Drums and Jerricans

For each listed packaging capacity, the following table compares the ISO 3574 (IBR, see § 171.7 of this subchapter) nominal thickness with the corresponding ISO 3574 minimum thickness.

* * * * *

PART 179—SPECIFICATIONS FOR TANK CARS

■ The authority citation for part 179 continues to read as follows:

Authority: 49 U.S.C. 5101–5127; 49 CFR 1.53.

PART 179—[AMENDED]

■ 151. In Part 179 amend the following sections by removing the parenthetical phrase ''(incorporated by reference; see § 171.7 of this subchapter)'' and adding the parenthetical phrase ''(IBR, see § 171.7 of this subchapter)'' in each of the following places:

179.100–10(c)

179.102–4(a)(1)

179.102–17(b)(1)

■ 152. In § 179.2, paragraph (a)(8) is revised to read as follows:

§ 179.2 Definitions and abbreviations.

(a) * * *

(8) *NPT* means an American Standard Taper Pipe Thread conforming to the requirements of NBS Handbook H–28 (IBR, see § 171.7 of this subchapter).

* * * * *

■ 153. Section 179.6 is revised to read as follows:

§ 179.6 Repairs and alterations.

For procedure to be followed in making repairs or alterations, see appendix R of the AAR Specifications for Tank Cars (IBR, see § 171.7 of this subchapter).

■ 154. In § 179.7, paragraph (b)(8) is revised to read as follows:

§ 179.7 Quality assurance program.

* * * * *

(b) * * *

(8) Provisions indicating that the requirements of the AAR Specifications for Tank Cars (IBR, see § 171.7 of this subchapter), apply.

* * * * *

■ 155. In § 179.15, paragraphs (a), (c), (d), and (h) are revised to read as follows:

§ 179.15 Pressure relief devices.

* * * * *

(a) *Performance standard.* Each tank must have a pressure relief device, made of materials compatible with the lading, having sufficient flow capacity to prevent pressure build-up in the tank to no more than the flow rating pressure of the pressure relief device in fire conditions as defined in appendix A of the AAR Specifications for Tank Cars (IBR, see § 171.7 of this subchapter).

* * * * *

(c) *Flow capacity of pressure relief devices.* The total flow capacity of each reclosing and nonreclosing pressure relief device must conform to appendix A of the AAR Specifications for Tank Cars.

(d) *Flow capacity tests.* The manufacturer of any reclosing or nonreclosing pressure relief device must design and test the device in accordance with appendix A of the AAR Specifications for Tank Cars.

* * * * *

(h) *Marking of pressure relief devices.* Each pressure relief device and rupture disc must be permanently marked in accordance with the appendix A of the AAR Specifications for Tank Cars.

■ 156. In § 179.16, paragraphs (c)(2) and (c)(3) are revised to read as follows:

§ 179.16 Tank-head puncture-resistance systems.

* * * * *

(c) * * *

(2) The design and test requirements of the full-head protection (shields) or full tank-head jackets must meet the impact test requirements in Section 5.3 of the AAR Specifications for Tank Cars (IBR, see § 171.7 of this subchapter).

(3) The workmanship must meet the requirements in Section C, Part II, Chapter 5, of the AAR Specifications for Design, Fabrication, and Construction of Freight Cars (IBR, see § 171.7 of this subchapter).

■ 157. Section 179.20 is revised to read as follows:

§ 179.20 Service equipment; protection systems.

If an applicable tank car specification authorizes location of filling or discharge connections in the bottom shell, the connections must be designed, constructed, and protected according to paragraphs E9.00 and E10.00 of the AAR Specifications for Tank Cars (IBR, see § 171.7 of this subchapter).

■ 158. In § 179.22, paragraph (a) is revised to read as follows:

§ 179.22 Marking.

* * * * *

(a) Each tank car must be marked according to the requirements in appendix C of the AAR Specifications for Tank Cars (IBR, see § 171.7 of this subchapter).

* * * * *

■ 159. In § 179.100–7, the table in paragraph (a), paragraph (b) introductory text, and paragraph (c)(2)(i) introductory text are revised to read as follows:

§ 179.100–7 Materials.

* * * * *

(a) * * *

Specifications	Minimum tensile strength (p.s.i.) welded condition[1]	Minimum elongation in 2 inches (percent) welded condition (longitudinal)
AAR TC 128, Gr. B	81,000	19
ASTM A 302[2], Gr.B	80,000	20
ASTM A 516[2]	70,000	20
ASTM A 537[2], Class 1	70,000	23

[1] Maximum stresses to be used in calculations.
[2] These specifications are incorporated by reference (IBR, see § 171.7 of this subchapter).

(b) *Aluminum alloy plate:* Aluminum alloy plate material used to fabricate tank shell and manway nozzle must be suitable for fusion welding and must comply with one of the following specifications (IBR, see § 171.7 of this subchapter) with its indicated minimum tensile strength and elongation in the welded condition. * * *

(c) * * *

(2) * * *

(i) High alloy steels used to fabricate tank must be tested in accordance with the following procedures in ASTM A 262, ''Standard Practices for Detecting Susceptibility to Intergranular Attack in Austenitic Stainless Steel'' (IBR, see § 171.7 of this subchapter), and must exhibit corrosion rates not exceeding the following: * * *

* * * * *

■ 160. In § 179.100–9, paragraph (a) is revised to read as follows:

§ 179.100–9 Welding.

(a) All joints shall be fusion-welded in compliance with the requirements of AAR Specifications for Tank Cars, appendix W (IBR, see § 171.7 of this subchapter). Welding procedures, welders and fabricators shall be approved.

* * * * *

■ 161. In § 179.100–10, paragraph (a) is revised to read as follows:

§ 179.100–10 Postweld heat treatment.

(a) After welding is complete, steel tanks and all attachments welded thereto must be postweld heat treated as a unit in compliance with the requirements of AAR Specifications for Tank Cars, appendix W (IBR, see § 171.7 of this subchapter).

* * * * *

■ 162. In § 179.100–12, paragraph (a) is revised to read as follows:

§ 179.100–12 Manway nozzle, cover and protective housing.

(a) Manway nozzles must be of approved design of forged or rolled steel for steel tanks or of fabricated aluminum alloy for aluminum tanks, with an access opening of at least 18 inches inside diameter, or at least 14 inches by 18 inches around or oval. Each nozzle must be welded to the tank and the opening reinforced in an approved manner in compliance with the requirements of AAR Specifications for Tank Cars, appendix E, Figure E10 (IBR, see § 171.7 of this subchapter).

* * * * *

■ 163. In § 179.100–13, paragraph (e) is revised to read as follows:

§ 179.100–13 Venting, loading and unloading valves, measuring and sampling devices.

* * * * *

(e) Bottom of tank shell may be equipped with a sump or siphon bowl, or both, welded or pressed into the shell. Such sumps or siphon bowls, if applied, are not limited in size and must be made of cast, forged or fabricated metal. Each sump or siphon bowl must be of good welding quality in conjunction with the metal of the tank shell. When the sump or siphon bowl is pressed in the bottom of the tank shell, the wall thickness of the pressed section must not be less than that specified for the shell. The section of a circular cross section tank to which a sump or siphon bowl is attached need not comply with the out-of-roundness requirement specified in AAR Specifications for Tank Cars, appendix W, W14.06 (IBR, see § 171.7 of this subchapter). Any portion of a sump or siphon bowl not forming a part of cylinder of revolution must have walls of such thickness and be so reinforced that the stresses in the walls caused by a given internal pressure are no greater than the circumferential stress that would exist under the same internal pressure in the wall of a tank of circular cross section designed in accordance with § 179.100–6(a), but in no case shall the wall thickness be less than that specified in § 179.101–1.

■ 164. In § 179.100–14, paragraph (a)(1) is revised to read as follows:

§ 179.100–14 Bottom outlets.

(a) * * *

(1) The extreme projection of the bottom washout equipment may not be more than that allowed by appendix E of the AAR Specifications for Tank Cars (IBR, see § 171.7 of this subchapter).

* * * * *

§ 179.100–18 [Amended]

■ 165. In § 179.100–18, amend paragraph (c) by removing the parenthetical phrase ''(see § 171.7 of this subchapter)'' and adding the parenthetical phrase ''(IBR, see § 171.7 of this subchapter)'' in its place.

■ 166. In § 179.101–1, footnote 6 following the table is revised to read as follows:

§ 179.101–1 Individual specification requirements.

* * * * *

[6] See AAR Specifications for Tank Cars, appendix E, E4.01 (IBR, see § 171.7 of this subchapter), and § 179.103–2.

* * * * *

■ 167. In § 179.102–1, paragraph (a)(1) is revised to read as follows:

§ 179.102–1 Carbon dioxide, refrigerated liquid.

(a) * * *

(1) All plates for tank, manway nozzle and anchorage of tanks must be made of carbon steel conforming to ASTM A 516/A 516M (IBR, see § 171.7 of this subchapter), Grades 55, 60, 65, or 70, or AAR Specification TC 128–78, Grade B. The ASTM A 516/A 516M plate must also meet the Charpy V-Notch test requirements of ASTM A 20/A 20M (see table 16) (IBR, see § 171.7 of this subchapter) in the longitudinal direction of rolling. The TC 128 plate must also meet the Charpy V-Notch energy absorption requirements of 15 ft.-lb. minimum average for 3 specimens, and 10 ft.-lb. minimum for one specimen, at minus 50 °F in the longitudinal direction of rolling in accord with ASTM A 370 (IBR, see § 171.7 of this subchapter). Production-welded test plates prepared as required by W4.00 of AAR Specifications for Tank Cars, appendix W (IBR, see § 171.7 of this subchapter), must include impact test specimens of weld metal and heat-affected zone. As an alternate, anchor legs may be fabricated of stainless steel, ASTM A 240/A 240M Types 304, 304L, 316 or 316L, for which impact tests are not required.

* * * * *

■ 168. In § 179.102–2, paragraph (a)(1) is revised to read as follows:

§ 179.102–2 Chlorine.

(a) * * *

(1) Tanks must be fabricated from carbon steel complying with ASTM Specification A 516 (IBR, see § 171.7 of this subchapter), Grade 70, or AAR Specification TC 128, Grade A or B.

* * *

* * * * *

■ 169. In § 179.102–4, paragraphs (a)(2) introductory text, (a)(2)(i), (a)(2)(ii), and (a)(2)(iii)(A) are revised to read as follows:

§ 179.102–4 Vinyl fluoride, stabilized.

(a) * * *

(2) Steel complying with ASTM Specification A 516 (IBR, see § 171.7 of this subchapter); Grade 70; ASTM Specification A 537 (IBR, see § 171.7 of this subchapter), Class 1; or AAR Specification TC 128, Grade B, in which case impact tests must be performed as follows:

(i) ASTM A 516/A 516M and A 537/A 537M material must meet the Charpy V-Notch test requirements, in longitudinal direction of rolling, of ASTM A 20/A 20M (IBR, see § 171.7 of this subchapter).

(ii) AAR Specification TC 128 material must meet the Charpy V-Notch test requirements, in longitudinal direction of rolling, of 15 ft.-lb. minimum average for 3 specimens, with a 10 ft.-lb. minimum for any one specimen, at minus 50 °F or colder, in accordance with ASTM A 370 (IBR, see § 171.7 of this subchapter).

(iii) * * *

(A) Be prepared in accordance with AAR Specifications for Tank Cars, appendix W, W4.00 (IBR, see § 171.7 of this subchapter);

* * * * *

■ 170. In § 179.102–17, paragraphs (b)(2) introductory text, (b)(2)(i), (b)(2)(ii), and (b)(2)(iii)(A) are revised to read as follows:

§ 179.102–17 Hydrogen chloride, refrigerated liquid.

* * * * *

(b) * * *

(2) Steel conforming to ASTM A 516/A 516M (IBR, see § 171.7 of this subchapter), Grade 70; ASTM A 537/A 537M, (IBR, see §171.7 of this subchapter) Class 1; or AAR Specification TC 128, Grade B in which case impact tests must be performed as follows:

(i) ASTM A 516/A 516M and A 537/A 537M material must meet the Charpy V-notch test requirements, in longitudinal direction of rolling, of ASTM A 20/A 20M (IBR, see § 171.7 of this subchapter).

(ii) AAR Specification TC 128 material must meet the Charpy V-notch test requirements, in longitudinal direction of rolling of 15 ft.-lb. minimum average for 3 specimens, with a 10 ft.-lb. minimum for any one

specimen, at minus 50 °F or colder, in accordance with ASTM A 370 (IBR, see § 171.7 of this subchapter).

(iii) * * *

(A) Be prepared in accordance with AAR Specifications for Tank Cars, appendix W, W4.00 (IBR, see § 171.7 of this subchapter);

* * * * *

■ 171. In § 179.103–5, the first two sentences in paragraph (b)(1) are revised to read as follows:

§ 179.103–5 Bottom outlets.

* * * * *

(b) * * *

(1) The extreme projection of the bottom outlet equipment may not be more than allowed by appendix E of the AAR Specifications for Tank Cars (IBR, see § 171.7 of this subchapter). All bottom outlet reducers and closures and their attachments shall be secured to the car by at least ⅜ inch chain, or its equivalent, except that bottom outlet closure plugs may be attached by ¼ inch chain. * * *

■ 172. In § 179.200–7, the table in paragraph (b), paragraph (c) introductory text, footnote 2 of paragraph (d) introductory text, the table in paragraph (e), paragraph (f) introductory text, and paragraph (h) are revised to read as follows:

* * * * *

§ 179.200–7 Materials.

* * * * *

(b) * * *

Specifications	Minimum tensile strength (p.s.i.) welded condition [1]	Minimum elongation in 2 inches (percent) weld metal (longitudinal)
AAR TC 128, Gr. B	81,000	19
ASTM A 516 [2]	70,000	20

[1] Minimum stresses to be used in calculations.
[2] This specification is incorporated by reference (IBR, see § 171.7 of this subchapter).

(c) *Aluminum alloy plate:* Aluminum alloy plate must be suitable for welding and comply with one of the following specifications (IBR, see § 171.7 of this subchapter):

* * * * *

[2] High alloy steel materials used to fabricate tank and expansion dome, when used, must be tested in accordance with Practice A of ASTM Specification A 262 titled, ''Standard Practices for Detecting Susceptibility to Intergranular Attack in Austenitic Stainless Steels'' (IBR; see § 171.7 of this subchapter). If the specimen does not pass Practice A, Practice B or C must be used and the corrosion rates may not exceed the following:

* * * * *

(e) *Nickel plate:* * * *

Specifications	Minimum tensile strength (psi) welded condition [1]	Minimum elongation in 2 inches (percent) weld metal (longitudinal)
ASTM B 162 [2]	40,000	20

* * * * *

(f) *Manganese-molybdenum steel plate:* Manganese-molybdenum steel plate must be suitable for fusion welding and comply with the following specification (IBR, see § 171.7 of this subchapter): * * *

* * * * *

(h) All external projections that may be in contact with the lading and all castings, forgings, or fabrications used for fittings or attachments to tank and expansion dome, when used, in contact with lading must be made of material to an approved specification. See AAR Specifications for Tank Cars, appendix M, M4.05 (IBR, see § 171.7 of this subchapter) for approved material specifications for castings for fittings.

■ 173. In § 179.200–9, paragraph (a) is revised to read as follows:

§ 179.200–9 Compartment tanks.

(a) When a tank is divided into compartments, by inserting interior heads, interior heads must be inserted in accordance with AAR Specifications for Tank Cars, appendix E, E7.00 (IBR, see § 171.7 of this subchapter), and must comply with the requirements specified in § 179.201–1. Voids between compartment heads must be provided with at least one tapped drain hole at their lowest point, and a tapped hole at the top of the tank. The top hole must be closed, and the bottom hole may be closed, with not less than three-fourths inch and not more than 1½-inch solid pipe plugs having NPT threads.

* * * * *

■ 174. In § 179.200–10, paragraph (a) is revised to read as follows:

§ 179.200–10 Welding.

(a) All joints shall be fusion-welded in compliance with the requirements of AAR Specifications for Tank Cars, appendix W (IBR, see § 171.7 of this subchapter). Welding procedures, welders and fabricators shall be approved.

■ 175. Section 179.200–11 is revised to read as follows:

§ 179.200–11 Postweld heat treatment.

When specified in § 179.201–1, after welding is complete, postweld heat treatment must be in compliance with the requirements of AAR Specifications for Tank Cars, appendix W (IBR, see § 171.7 of this subchapter).

■ 176. In § 179.200–13, paragraph (a) is revised to read as follows:

§ 179.200–13 Manway ring or flange, pressure relief device flange, bottom outlet nozzle flange, bottom washout nozzle flange and other attachments and openings.

(a) These attachments shall be fusion welded to the tank and reinforced in an approved manner in compliance with the requirements of appendix E, figure 10, of the AAR Specifications for Tank

Cars (IBR, see § 171.7 of this subchapter).

* * * * *

■ 177. In § 179.200–15, paragraph (c) is revised to read as follows:

§ 179.200–15 Closures for manways.

* * * * *

(c) Manway covers must be of approved cast, forged, or fabricated metals. Malleable iron, if used, must comply with ASTM A 47 (IBR, see § 171.7 of this subchapter), Grade 35018. Cast iron manway covers must not be used.

* * * * *

■ 178. In § 179.200–17, the first sentence of paragraph (a)(1) is revised to read as follows:

§ 179.200–17 Bottom outlets.

(a) * * *

(1) The extreme projection of the bottom outlet equipment may not be more than that allowed by appendix E of the AAR Specifications for Tank Cars (IBR, see § 171.7 of this subchapter). * * *

* * * * *

■ 179. In § 179.200–22, paragraph (d) is revised to read as follows:

§ 179.200–22 Test of tanks.

* * * * *

(d) Caulking of welded joints to stop leaks developed during the foregoing tests is prohibited. Repairs in welded joints shall be made as prescribed in AAR Specifications for Tank Cars, appendix W (IBR, see § 171.7 of this subchapter).

■ 180. Section 179.201–4 is revised to read as follows:

§ 179.201–4 Material.

All fittings, tubes, and castings and all projections and their closures, except for protective housing, must also meet the requirements specified in ASTM A 262 (IBR, see § 171.7 of this subchapter), except that when preparing the specimen for testing the carburized surface may be finished by grinding or machining.

■ 181. Section 179.201–5 is revised to read as follows:

§ 179.201–5 Postweld heat treatment and corrosion resistance.

(a) Tanks and attachments welded directly thereto must be postweld heat treated as a unit at the proper temperature except as indicated below. Tanks and attachments welded directly thereto fabricated from ASTM A 240/A 240M (IBR, see § 171.7 of this subchapter) Type 430A, Type 304 and Type 316 materials must be postweld heat treated as a unit and must be tested to demonstrate that they possess the corrosion resistance specified in § 179.200–7(d), Footnote 2. Tanks and attachments welded directly thereto, fabricated from ASTM A 240/A 240M Type 304L or Type 316L materials are not required to be postweld heat treated.

(b) Tanks and attachments welded directly thereto, fabricated from ASTM A 240/A 240M Type 304L and Type 316 materials must be tested to demonstrate that they possess the corrosion resistance specified in § 179.200–7(d), Footnote 2.

■ 182. In § 179.201–6, paragraph (c) is revised to read as follows:

§ 179.201–6 Manways and manway closures.

* * * * *

(c) The manway ring and cover for specifications DOT–103CW, 103DW, 103EW, 111360W7, or 11A100W6 must be made of the metal and have the same inspection procedures specified in AAR Specifications for Tank Cars, appendix M, M3.03 (IBR, see § 171.7 of this subchapter).

* * * * *

■ 183. In § 179.220–6, in paragraph (a), the definition of ''*S*'' following the formula is revised to read as follows:

§ 179.220–6 Thickness of plates.

(a) * * *

Where: * * *

S = Minimum tensile strength of plate material in psi as prescribed in AAR Specifications for Tank Cars, appendix M, Table M1 (IBR, see § 171.7 of this subchapter);

* * * * *

■ 184. In § 179.220–7, the table in paragraph (b), paragraph (c) introductory text, paragraph (d) introductory text, and paragraph (e) introductory text are revised to read as follows:

§ 179.220–7 Materials.

* * * * *

(b) * * *

Specifications	Minimum tensile strength (p.s.i.) welded condition [1]	Minimum elongation in 2 inches (percent) weld metal (longitudinal)
AAR TC 128, Gr. B	81,000	19
ASTM A 516 [2], Gr. 70	70,000	20

[1] Maximum stresses to be used in calculations.
[2] This specification is incorporated by reference (IBR, see § 171.7 of this subchapter).

(c) *Aluminum alloy plate:* Aluminum alloy plate must be suitable for welding and comply with one of the following specifications (IBR, see § 171.7 of this subchapter): * * *

* * * * *

(d) High alloy steel plate: High alloy steel plate must comply with one of the following specifications (IBR, see § 171.7 of this subchapter): * * *

(e) Manganese-molybdenum steel plate: Manganese-molybdenum steel plate must be suitable for fusion welding and must comply with the following specification (IBR, see § 171.7 of this subchapter): * * *

* * * * *

■ 185. In § 179.220–10, paragraph (a) is revised to read as follows:

§ 179.220–10 Welding.

(a) All joints must be fusion welded in compliance with AAR Specifications for Tank Cars, appendix W (IBR, see § 171.7 of this subchapter). Welding procedures, welders, and fabricators shall be approved.

* * * * *

■ 186. In § 179.220–11, paragraph (b) is revised to read as follows:

§ 179.220–11 Postweld heat treatment.

* * * * *

(b) Postweld heat treatment of the cylindrical portions of the outer shell to which the anchorage or draft sills are attached must comply with AAR Specifications for Tank Cars, appendix W (IBR, see § 171.7 of this subchapter).

* * * * *

■ 187. Section 179.220–14 is revised to read as follows:

§ 179.220–14 Openings in the tanks.

Openings in the inner container and the outer shell must be reinforced in compliance with AAR Specifications for Tank Cars, appendix E (IBR, see § 171.7 of this subchapter). In determining the required reinforcement area for openings in the outer shell, *t* shall be one-fourth inch.

■ 188. In § 179.220–18, the first sentence in paragraph (a)(1) is revised to read as follows:

179.220–18 Bottom outlets.

(a) * * *

(1) The extreme projection of the bottom outlet equipment may not be more than that allowed by appendix E of the AAR Specifications for Tank Cars (IBR, see § 171.7 of this subchapter). * * *

* * * * *

■ 189. In § 179.220–26, paragraph (a) is revised to read as follows:

§ 179.220–26 Stenciling.

(a) The outer shell, or the jacket if the outer shell is insulated, must be stenciled in compliance with AAR Specifications for Tank Cars, appendix C (IBR, see § 171.7 of this subchapter).

* * * * *

■ 190. In § 179.300–7, the table in paragraph (a) is revised to read as follows:

§ 179.300–7 Materials.

(a) * * *

Specifications [2]	Tensile strength (psi) welded condition [1] (minimum)	Elongation in 2 inches (percent) welded condition [1] (longitudinal) (minimum)
ASTM A 240/A 240M type 304	75,000	25
ASTM A 240/A 240M type 304L	70,000	25
ASTM A 240/A 240M type 316	75,000	25
ASTM A 240/A 240M type 316L	70,000	25
ASTM A 240/A 240M type 321	75,000	25
ASTM A 285 Gr. A	45,000	29
ASTM A 285 Gr. B	50,000	20
ASTM A 285 Gr. C	55,000	20
ASTM A 515/A 515M Gr. 65	65,000	20
ASTM A 515/A 515M Gr. 70	70,000	20
ASTM A 516/A 516M Gr. 70	70,000	20

[1] Maximum stresses to be used in calculations.
[2] These specifications are incorporated by reference (IBR, see § 171.7 of this subchapter.)

* * * * *

■ 191. In § 179.300–9, paragraph (a) is revised to read as follows:

§ 179.300–9 Welding.

(a) Longitudinal joints must be fusion welded. Head-to-shell joints must be forge welded on class DOT–106A tanks and fusion welded on class DOT–110A tanks. Welding procedures, welders and fabricators must be approved in accordance with AAR Specifications for Tank Cars, appendix W (IBR, see § 171.7 of this subchapter).

* * * * *

■ 192. Section 179.300–10 is revised to read as follows:

§ 179.300–10 Postweld heat treatment.

After welding is complete, steel tanks and all attachments welded thereto, must be postweld heat treated as a unit in compliance with the requirements of AAR Specifications for Tank Cars, appendix W (IBR, see § 171.7 of this subchapter).

■ 193. In § 179.300–15, paragraph (a) is revised to read as follows:

§ 179.300–15 Pressure relief devices.

(a) Unless prohibited in part 173 of this subchapter, tanks shall be equipped with one or more relief devices of approved type, made of metal not subject to rapid deterioration by the lading and screwed directly into tank heads or attached to tank heads by other approved methods. The total discharge capacity shall be sufficient to prevent building up pressure in tank in excess of 82.5 percent of the tank test pressure. When relief devices of the fusible plug type are used, the required discharge capacity shall be available in each head. See AAR Specifications for Tank Cars, appendix A (IBR, see § 171.7 of this subchapter), for the formula for calculating discharge capacity.

* * * * *

■ 194. In § 179.300–17, paragraph (b) is revised to read as follows:

§ 179.300–17 Tests of pressure relief devices.

* * * * *

(b) Rupture disks of non-reclosing pressure relief devices must be tested and qualified as prescribed in appendix A, Paragraph 5, of the AAR Manual of Standards and Recommended Practices, Section C—Part III, AAR Specifications for Tank Cars (IBR, see § 171.7 of this subchapter).

* * * * *

■ 195. In § 179.400–3, paragraph (a)(1) is revised to read as follows:

§ 179.400–3 Type.

(a) * * *

(1) Consist of an inner tank of circular cross section supported essentially concentric within an outer jacket of circular cross section, with the out of roundness of both the inner tank and outer jacket limited in accordance with Paragraph UG–80 in Section VIII of the ASME Code (IBR, see § 171.7 of this subchapter);

* * * * *

■ 196. In § 179.400–5, paragraph (a) introductory text is revised to read as follows:

§ 179.400–5 Materials.

(a) Stainless steel of ASTM A 240/A 240M (IBR, see § 171.7 of this subchapter), Type 304 or 304L must be used for the inner tank and its appurtenances, as specified in AAR Specifications for Tank Cars, appendix M (IBR, see § 171.7 of this subchapter), and must be—

* * * * *

■ 197. In § 179.400–6, paragraph (b) is revised to read as follows:

§ 179.400–6 Bursting and buckling pressure.

* * * * *

(b) The outer jacket of the required evacuated insulation system must be

designed in accordance with § 179.400–8(d) and in addition must comply with the design loads specified in Section 6.2 of the AAR Specifications for Tank Cars (IBR, see § 171.7 of this subchapter). The designs and calculations must provide for the loadings transferred to the outer jacket through the support system.

■ 198. In § 179.400–8, in paragraph (a), the definition of ''S'' following the formula is revised to read as follows:

§ 179.400–8 Thickness of plates.

(a) * * *

Where: * * *

* * * * *

S = minimum tensile strength of the plate material, as prescribed in AAR Specifications for Tank Cars, appendix M, Table M1 (IBR, see § 171.7 of this subchapter), in psi;

* * * * *

■ 199. In § 179.400–11, paragraph (c) is revised to read as follows:

§ 179.400–11 Welding.

* * * * *

(c) Each joint must be welded in accordance with the requirements of AAR Specifications for Tank Cars, appendix W (IBR, see § 171.7 of this subchapter).

* * * * *

■ 200. In § 179.400–12, paragraph (b) introductory text is revised to read as follows:

§ 179.400–12 Postweld heat treatment.

* * * * *

(b) The cylindrical portion of the outer jacket, with the exception of the circumferential closing seams, must be postweld heat treated as prescribed in AAR Specifications for Tank Cars, appendix W (IBR, see § 171.7 of this subchapter). Any item to be welded to this portion of the outer jacket must be attached before postweld heat treatment. Welds securing the following need not be postweld heat treated when it is not practical due to final assembly procedures:

* * * * *

■ 201. Section 179.400–15 is revised to read as follows:

§ 179.400–15 Radioscopy.

Each longitudinal and circumferential joint of the inner tank, and each longitudinal and circumferential double welded butt joint of the outer jacket, must be examined along its entire length in accordance with the requirements of AAR Specifications for Tank Cars, appendix W (IBR, see § 171.7 of this subchapter).

■ 202. In § 179.400–18, paragraph (b) is revised to read as follows:

§ 179.400–18 Test of inner tank.

* * * * *

(b) Caulking of welded joints to stop leaks developed during the test is prohibited. Repairs to welded joints must be made as prescribed in AAR Specifications for Tank Cars, appendix W (IBR, see § 171.7 of this subchapter).

■ 203. In § 179.400–20, paragraph (c)(1) is revised to read as follows:

§ 179.400–20 Pressure relief devices.

* * * * *

(c) * * *

(1) *Safety vent.* The safety vent shall function at the pressure specified in § 179.401–1. The safety vent must be flow rated in accordance with the applicable provisions of AAR Specifications for Tank Cars, appendix A (IBR, see § 171.7 of this subchapter), and provide sufficient capacity to meet the requirements of AAR Specifications for Tank Cars, appendix A, A8.07(a).

* * * * *

■ 204. In § 179.400–25, the introductory text is revised to read as follows:

§ 179.400–25 Stenciling.

Each tank car must be stenciled in compliance with the provisions of the AAR Specifications for Tank Cars, appendix C (IBR, see § 171.7 of this subchapter). The stenciling must also include the following:

* * * * *

PART 180—CONTINUING QUALIFICATION AND MAINTENANCE OF PACKAGINGS

■ The authority citation for part 180 continues to read as follows:

Authority: 49 U.S.C. 5101–5127; 49 CFR 1.53.

PART 180—[AMENDED]

■ 205. In Part 180, amend the following sections by removing the parenthetical phrase ''(incorporated by reference; see § 171.7 of this subchapter)'' and adding the parenthetical phrase ''(IBR, see § 171.7 of this subchapter)'' in each of the following places:

180.205(f)(1)
180.209(b)(1)(iii)
180.209(d)
180.209(e)
180.209(g)
180.209(i)(1) introductory text
180.211(c)(1)(iv)
180.211(d)(1)(ii)
180.209(f)
180.209(i)(2)

■ 206. In Part 180, amend the following sections by removing the parenthetical phrase ''(incorporated by reference; see § 171.7 of this subchapter)'' in each of the following places:

■ 207. In § 180.209, paragraph (k) is revised to read as follows:

§ 180.209 Requirements for requalification of specification cylinders.

* * * * *

(k) *3HT cylinders.* In addition to the other requirements of this section, a cylinder marked DOT–3HT must be requalified in accordance with CGA C–8 (IBR, see § 171.7 of this subchapter).

* * * * *

■ 208. In § 180.407, paragraph (g)(3) is revised to read as follows:

§ 180.407 Requirements for test and inspection of specification cargo tanks.

* * * * *

(g) * * *

(3) Each MC 330 and MC 331 cargo tank constructed of quenched and tempered steel in accordance with Part UHT in Section VIII of the ASME Code (IBR, see § 171.7 of this subchapter), or constructed of other than quenched and tempered steel but without postweld heat treatment, used for the transportation of anhydrous ammonia or any other hazardous materials that may cause corrosion stress cracking, must be internally inspected by the wet fluorescent magnetic particle method immediately prior to and in conjunction with the performance of the pressure test prescribed in this section. Each MC 330 and MC 331 cargo tank constructed of quenched and tempered steel in accordance with Part UHT in Section VIII of the ASME Code and used for the transportation of liquefied petroleum gas must be internally inspected by the wet fluorescent magnetic particle method immediately prior to and in conjunction with the performance of the pressure test prescribed in this section. The wet fluorescent magnetic particle inspection must be in accordance with Section V of the ASME Code and CGA Technical Bulletin TB–2 (IBR, see § 171.7 of this subchapter). This paragraph does not apply to cargo tanks that do not have manholes. (See § 180.417(c) for reporting requirements.)

* * * * *

■ 209. In § 180.411, paragraph (b) introductory text is revised to read as follows:

§ 180.411 Acceptable results of tests and inspections.

* * * * *

(b) *Dents, cuts, digs and gouges.* For evaluation procedures, see CGA C–6 (IBR, see § 171.7 of this subchapter).

* * * * *

■ 210. In § 180.413, paragraph (b)(6) is revised to read as follows:

§ 180.413 Repair, modification, stretching, rebarrelling, or mounting of specification cargo tanks.

* * * * *

(b) * * *

(6) MC 330 and MC 331 cargo tanks must be repaired in accordance with the repair procedures described in CGA Technical Bulletin TB–2 (IBR, see § 171.7 of this subchapter) and the National Board Inspection Code (IBR, see § 171.7 of this subchapter). Each cargo tank having cracks or other defects requiring welded repairs must meet all inspection, test, and heat treatment requirements in § 178.337–16 of this subchapter in effect at the time of the repair, except that postweld heat treatment after minor weld repairs is not required. When a repair is made of defects revealed by the wet fluorescent magnetic particle inspection, including those repaired by grinding, the affected area of the cargo tank must again be examined by the wet fluorescent magnetic particle method after hydrostatic testing to assure that all defects have been removed.

* * * * *

■ 211. In § 180.509, in paragraph (g)(1)(ii), Note 2 following the table is revised to read as follows:

§ 180.509 Requirements for inspection and test of specification tank cars.

* * * * *

(g) * * *

(1) * * *

(ii) * * *

Notes: * * *

2. Any reduction in the tank car shell may not affect the structural strength of the tank car so that the tank car shell no longer conforms to Section 6.2 of the AAR Specifications for Tank Cars (IBR, see § 171.7 of this subchapter).

* * * * *

■ 212. In § 180.513, paragraph (a) is revised to read as follows:

§ 180.513 Repairs, alterations, conversions, and modifications.

(a) In order to repair tank cars, the tank car facility must comply with the requirements of appendix R of the AAR Specifications for Tank Cars (IBR, see § 171.7 of this subchapter).

* * * * *

■ 213. In § 180.515, paragraph (a) is revised to read as follows:

§ 180.515 Markings.

(a) When a tank car passes the required inspection and test with acceptable results, the tank car facility shall mark the date of the inspection and test and the due date of the next inspection and test on the tank car in accordance with appendix C of the AAR Specifications for Tank Cars (IBR, see § 171.7 of this subchapter). When a tank car facility performs multiple inspection and test at the same time, one date may be used to satisfy the requirements of this section. One date also may be shown when multiple inspection and test have the same due date.

* * * * *

■ 214. In § 180.517, paragraph (a) is revised to read as follows:

§ 180.517 Reporting and record retention requirements.

(a) *Certification and representation.* Each owner of a specification tank car shall retain the certificate of construction (AAR Form 4–2) and related papers certifying that the manufacture of the specification tank car identified in the documents is in accordance with the applicable specification. The owner shall retain the documents throughout the period of ownership of the specification tank car and for one year thereafter. Upon a change of ownership, the requirements in Section 1.3.15 of the AAR Specifications for Tank Cars (IBR, see § 171.7 of this subchapter) apply.

* * * * *

■ 215. In § 180.519, paragraph (c) is revised to read as follows:

§ 180.519 Periodic retest and inspection of tank cars other than single-unit tank car tanks.

* * * * *

(c) *Visual inspection.* Tanks of Class DOT 106A and DOT 110A–W specifications (§§ 179.300 and 179.301 of this subchapter) used exclusively for transporting fluorinated hydrocarbons and mixtures thereof, and that are free from corroding components, may be given a periodic complete internal and external visual inspection in place of the periodic hydrostatic retest. Visual inspections shall be made only by competent persons. The tank must be accepted or rejected in accordance with the criteria in CGA C–6 (IBR, see § 171.7 of this subchapter).

* * * * *

Issued in Washington, DC, on September 24, 2003, under the authority delegated in 49 CFR Part 1.

Samuel G. Bonasso,

Acting Administrator, Research and Special Programs Administration.

[FR Doc. 03–30613 Filed 12–30–03; 8:45 am]

BILLING CODE 4910–60–P

Federal Register

Wednesday,
December 31, 2003

Part III

Department of Labor

Occupational Safety and Health Administration

29 CFR Part 1910

Occupational Exposure to Tuberculosis; Proposed Rule; Termination of Rulemaking Respiratory Protection for M. Tuberculosis; Final Rule; Revocation

DEPARTMENT OF LABOR

Occupational Safety and Health Administration

29 CFR Part 1910

[Docket No. H–371]

RIN 1218–AB46

Occupational Exposure to Tuberculosis

AGENCY: Occupational Safety and Health Administration (OSHA), Labor.

ACTION: Proposed rule; termination of rulemaking.

SUMMARY: OSHA is withdrawing its 1997 proposed standard on Occupational Exposure to Tuberculosis (TB). Because of a broad range of Federal and community initiatives, the rate of TB has declined steadily and dramatically since OSHA began work on the proposal in 1993. Hospitals, which are the settings where workers are likely to have the highest risk of exposure to TB bacteria, have come into substantial compliance with Federal guidelines for preventing the transmission of TB. Overall reductions in TB mean that all workers are much less likely now to encounter infectious TB patients in the course of their jobs.

In addition, an OSHA standard is unlikely to result in a meaningful reduction of disease transmission caused by contact with the most significant remaining source of occupational risk: exposure to individuals with undiagnosed and unsuspected TB. Particularly outside of hospitals, workers often will not identify suspect TB cases quickly enough to implement isolation procedures and other precautions before exposure occurs.

OSHA recognizes, however, that continued vigilance is necessary to maintain the gains achieved so far. OSHA intends to provide guidance to workplaces with less medical expertise and fewer resources than hospitals, and to use cooperative relationships with employers, public health experts and other government agencies to promote TB control. OSHA will also continue to enforce the General Duty Clause of the OSH Act and relevant existing standards in situations where employers' failure to implement available precautions exposes workers to the hazard of TB infection.

DATES: This withdrawal is effective December 31, 2003.

FOR FURTHER INFORMATION CONTACT: George Shaw, OSHA Office of Communication, Room N–3647, U.S. Department of Labor, 200 Constitution Avenue, NW., Washington, DC 20210. Telephone: (202) 693–1999.

SUPPLEMENTARY INFORMATION:

I. Background

On August 25, 1993, the Coalition to Fight TB in the Workplace petitioned OSHA to promulgate both an Emergency Temporary Standard (ETS) under section 6(c) of the Occupational Safety and Health Act (OSH Act), and a permanent occupational health standard under section 6(b) of the Act to protect workers from occupational exposure to TB (Ex.1). 29 U.S.C. 655(b), 655(c). Citing the resurgence of TB at that time and the emergence and increasing prevalence of multi-drug resistant TB (MDR–TB), the petition argued that a mandatory standard was needed to address the hazards associated with occupational exposure to TB. According to the petition, TB Guidelines developed by the Federal Centers for Disease Control and Prevention (CDC) were not an adequate response to this hazard because the guidelines were not mandatory and were not being implemented fully or rigorously in most workplaces. The petition also requested that, as an interim measure, OSHA immediately issue nationwide enforcement guidelines.

On October 8, 1993, OSHA issued a directive governing enforcement activities to address occupational exposure to TB. (Ex. 7–1–A, updated February 9, 1996) The directive explained that, although OSHA had no standard directed specifically at occupational exposure to TB, some of its generally applicable standards provide protection from this hazard. For example, OSHA's Respiratory Protection Standard, 29 CFR 1910.134, requires employers to provide protection to workers exposed to airborne hazards. When this standard was revised in 1998, the earlier version was recodified as an interim standard governing respirators used to provide protection from TB. (29 CFR 1910.139; 63 FR 1152) (For the revocation of this rule, see the final rule published elsewhere in this separate part of the **Federal Register**) Another standard, 29 CFR 1901.145, requires accident prevention tags to warn of biological hazards. In addition, section 5(a)(1), the General Duty Clause of the Act, requires that each employer:

> * * * furnish to each of his employees employment and a place of employment which are free from recognized hazards that are causing or are likely to cause death or serious physical harm to his employees.

OSHA compliance personnel were directed to evaluate employers' efforts to protect their workers from TB at health care facilities and other workplaces where CDC had identified a risk of occupational TB transmission, as well as to respond to complaints about inadequate TB control measures. The TB Directive is still in effect. OSHA has also implemented a number of National and Local 2002–2003 National Emphasis Program (NEP) for nursing and personal care facilities directed enforcement personnel to determine whether each facility where there was a suspect or confirmed TB case within the past six months had implemented appropriate infection control procedures, including isolation procedures and employee skin tests. OSHA conducted 1000 inspections under the NEP this year.

On January 26, 1994, OSHA responded to the rulemaking petition, saying that it was initiating rulemaking on a permanent standard, but would not issue an ETS. On October 17, 1997, OSHA published a Proposed Rule on Occupational Exposure to Tuberculosis (62 FR 54160). In the proposal, the Agency made a preliminary determination that workers in hospitals, nursing homes, hospices, correctional facilities, homeless shelters, and certain other work settings faced a significant risk of incurring TB infection through occupational exposure. The Agency also made a preliminary conclusion that use of established infection prevention and control measures could reduce or eliminate this significant risk. The protective measures OSHA proposed were based in large part on existing CDC guidelines, and included instituting procedures for the early identification and treatment of TB patients, isolating patients with infectious TB in rooms designed to protect others from contact with disease-causing microorganisms, requiring healthcare workers to use respirators to perform certain high-hazard procedures on infectious patients, training workers in TB recognition and control, and providing medical follow-up for occupationally exposed workers who become infected and information to their colleagues with similar exposures.

OSHA accepted comments and held public hearings on the proposed standard in 1998. Additional comments on specific issues were also accepted in 1999 and 2002. (64 FR 32447 (June 17, 1999); 64 FR 34625 (June 28, 1999); 67 FR 3465 (January 24, 2002); 67 FR 9934 (March 5, 2002)) On the latter occasion, OSHA asked for comment on a revised risk assessment and peer reviews of that assessment, as well as on a National Academy of Sciences/Institute of Medicine (NAS/IOM) report,

''Tuberculosis in the Workplace,'' that Congress had commissioned in 1999. (Exs. 184; 185; 186; 187)

Rulemaking participants represented diverse constituencies, including public health organizations such as the CDC, the American Lung Association's American Thoracic Society, the Infectious Disease Society of America, the National TB Controller's Association, and state and local health departments; labor unions such as the American Federation of State, County, and Municipal Employees and the Service Employees International Union; safety and health professionals and employees working in hospitals, correctional facilities, TB clinics, nursing homes, drug treatment centers and homeless shelters; and professional and trade associations such as the Society of Healthcare Epidemiologists of America, the American Hospital Association and the Association for Professionals in Infection Control and Epidemiology. These groups have extensive experience in TB control, and provided a broad range of perspectives on the issues involved in the rulemaking.

II. Reasons for Withdrawal of the Proposed Standard

OSHA has decided not to promulgate a standard addressing occupational exposure to TB because it does not believe a standard would substantially reduce the occupational risk of TB infection. Many commenters argued forcefully that the proposed rule was based on an overestimate of this risk. In addition, existing TB control efforts, initiated by the Federal government in concert with other public health agencies, have led to a dramatic decline in TB over the past decade, greatly reducing the risk of occupational exposure to TB. Because of these TB control efforts, effective infection control measures are already in place, particularly in hospitals, which is where the occupational risk of TB exposure would be most severe.

Moreover, much of the current occupational transmission appears to occur when workers do not realize that a patient, client, or other contact has infectious TB. An OSHA standard is unlikely to be more effective than the CDC guidelines in eliminating this risk. OSHA believes that workers in many situations, particularly those with limited medical qualifications and resources, will not be able to identify or diagnose currently undiagnosed TB cases frequently and rapidly enough to prevent this transmission from occurring. Risk to workers encountering undiagnosed cases will be reduced most effectively by reducing even further the incidence of TB in the population as a whole, and therefore in their client populations. OSHA will use technical assistance, outreach, and cooperative activities to assist employers and their workers in implementing infection control measures. In addition, OSHA will continue to use its existing enforcement tools, as appropriate, with employers who are not taking adequate action to protect their workers from exposure to TB.

TB in the United States has declined significantly since OSHA decided to propose a TB Standard.

Until 1985, the number and rate of TB cases in the United States had declined steadily for more than 30 years. Unexpectedly, however, the incidence of TB started to increase in 1986. At the peak of this resurgence in 1992, CDC reported 26,673 TB cases (10.5 per 100,000 population)—an increase of 20% over the number of cases, and of more than 12% over the case rate, reported in 1985. The situation was especially pronounced in states with historically high TB rates. In 1992, when the rate of TB for the nation as a whole was 10.5 cases per 100,000 population, New York, Florida, California, Texas and Illinois, had rates ranging from 10.9 to 25.2 per 100,000, and accounted for 58% of the total cases. In addition, by 1991 there had been a seven-fold increase in the percentage of multidrug-resistant TB (MDR–TB), TB that is resistant to both isoniazid and rifampin, the two major drug treatments for the disease. (Ex. 187, p. 13)

The Federal agency with primary responsibility for responding to the TB crisis is the CDC. In 1989, CDC published its ''Strategic Plan for the Elimination of Tuberculosis in the United States.'' (Ex. 6–19, pp. 1–25) This plan, which had been under development since 1984, called for a comprehensive governmental and public health effort to address TB transmission. In 1992, it was supplemented by the CDC's National Action Plan to Combat Multidrug-Resistant Tuberculosis. (Ex. 7–65) These plans provided the framework for the Federal response to the TB resurgence of the late 1980s and early 1990s.

The plans prescribed a broad and multifaceted attack on TB, including infection control guidelines describing methods to reduce transmission in a number of settings; physician education programs and practice guidelines to ensure effective treatment; research into new and faster methods of identifying TB, particularly MDR–TB; the implementation and maintenance of community-based TB control programs, and the development of alternative TB treatments. (Ex. 187, pp. 17–23) As well as beginning work on its TB proposal, OSHA's contribution to this national effort included the enforcement activities described in its 1993 directive, as well as outreach and educational activities directed at employers with workers at risk of occupational exposure to TB. As a result of all of this coordinated activity, starting in 1993, the incidence of TB began to decline again.

By 1996, as OSHA noted in the preamble to its 1997 proposal, both the number and the rate of TB cases were lower than they had been in 1985, before the resurgence began. This decline has continued, and for 2002 CDC reported 15,078 TB cases (5.2 per 100,000 population). These numbers represent a reduction of more than 50% in the rate of TB since the 1992 peak, and of 43.5% in the number of cases. (Table 1) The number of reported TB cases and the national TB case rate are now at their lowest levels since TB reporting began in 1953, with significant decreases occurring in the states where the resurgence was most severe. The most dramatic decline occurred in New York, which in 1992 had the highest TB rate in the Nation, 25.2 cases per 100,000 population. By 2002, it had experienced a 70% decline in the case rate, to 7.5 per 100,000. New York, California, Florida, Texas, and Illinois together account for fully 65% of the decrease in the number of cases since 1992. The number of TB cases in these five states was reduced by about 50% over this period, 7% more than the Nation as a whole. The number and percentage of MDR–TB cases have also declined dramatically over this period. In 2002, 138, or 1.3%, of culture-positive TB cases were resistant to isoniazid and rifampin, down from 468, or 2.7% reported in 1993, a reduction of more than 70% in the number, and 50% in the percentage, of cases that are MDR–TB. (Centers for Disease Control and Prevention, Trends in Tuberculosis Morbidity, (United States, 1992–2002), MMWR 2003; 52: 217–222).

CDC has noted, however, that even though TB is declining in all demographic groups studied, there remains substantial variation in disease incidence among these groups. (MMWR 2003: 52: 217) In 2002, for the first time, more than half of all TB cases occurred in individuals who were born outside of the United States, and CDC believes that the majority of these cases are the result of infections also incurred outside of this country. This suggests that TB transmission in the U.S. may be even

less common than the numbers in Table 1 would indicate. Even among the U.S. born population, there are substantial disparities among racial, ethnic, and economic groups, with higher TB rates associated with lower socioeconomic status. (MMWR 2003: 52: 218) Well over half of all TB cases are in individuals who are not in the workforce, so the TB rates for workers are substantially lower than the overall population rates. (Ex. 187, pp. 153, 154 citing MMWR 2003: 52: 222)

TABLE 1.—U.S. TUBERCULOSIS CASES AND CASE RATES PER 100,000 POPULATION

Year	Number	Rate	Percent change number	Percent change rate
1992	26,673	10.5	+1.5	+1.0
1993	25,287	9.8	−5.2	−6.7
1994	24,361	9.4	−3.7	−4.1
1995	22,860	8.7	−6.2	−7.4
1996	21,337	8.0	−6.7	−8.0
1997	19,851	7.4	−7.0	−7.5
1998	18,361	6.8	−7.5	−8.1
1999	17,531	6.4	−4.5	−5.9
2000	16,377	5.8	−6.6	−9.4
2001	15,989	5.6	−2.4	−3.4
2002	15,078	5.2	−5.7	−7.1

From CDC: ''Reported Tuberculosis in the United States, 2001''; ''Trends in Tuberculosis Morbidity—U.S., 1992–2002.''

The occupational risk of TB infection is lower than that reflected in OSHA's proposed standard.

The proposed standard was based on OSHA's preliminary assessment that workers occupationally exposed to TB were at substantially greater risk of TB infection, and therefore of active TB disease and death, than was the general population. Both OSHA's preliminary risk assessment, and the revision released in 2000 were based in large part on published data on the number of workers in different health care and prison settings with skin tests indicating recent TB infection (the conversion rate), and on comparisons of those data to estimates of background conversion rates among comparable populations without occupational exposure. In order to determine the estimated background conversion rates, OSHA used calculations derived from the number of active TB cases reported to CDC in a given year. OSHA assumed that about 10% of infected individuals who do not undergo prophylactic treatment would eventually develop active TB, 40% of them in the first year after infection, 20% in the second year, and the remaining 40% distributed equally through the remainder of their lifetimes. The revised risk assessment estimated that, based on the existing frequency of prophylactic treatment, active TB would occur in only about 6.5% of infected individuals. OSHA also assumed that 7.8% of active TB cases would be fatal.

As both OSHA's peer reviewers and many commenters pointed out, however, there are several uncertainties associated with these calculations, and the risk assessments likely overstated the occupational risk. (Exs. 185; 186; 187, p.153; 189–21; 189–20; 189–32; 189–28; 189–25) First, for a number of reasons ranging from imprecise testing protocols to poor availability of appropriate study populations, data on conversion rates are of less than ideal reliability and estimates of increased risk among occupationally exposed workers are necessarily imprecise. Second, a number of participants pointed to data indicating that far less than 10% of infected individuals, possibly even less than 5%, will develop active TB. (Exs. 185; 187 pp. 152–153, 216–220) This most obviously affects OSHA's estimate of the number of occupationally-acquired infections that will develop into active TB. In addition, because background infection rates were derived in large part by applying this assumption about disease development to actual data on the number of active cases, the assumptions also affect the calculation of excess occupational risk of infection. If only half the assumed percentage of infected individuals develop active TB (5% instead of 10%), the number of TB infections leading to a given number of active TB cases (the background rate) would be twice as high as calculated, meaning that the excess risk of infection attributed to occupational exposure would be lower than originally assumed.

Similarly, even though the fatality rate was not a major basis for OSHA's preliminary determination of significant risk, many participants criticized the assumption that 7.8% of TB cases would be fatal. The IOM report stated that, for healthcare workers who are not immunocompromised or infected with MDR–TB, the risk of death is negligible. (Ex. 187, pp. 154, 222). Several participants noted that the 7.8% mortality rate was derived from 1989 to 1991 data, and that the death rate for those years was much higher than it has been since; in fact, for 1999 and 2000, the death rate was 3%. (Exs. 187, p. 153; 185, p.12; 189–13, p. 3; 189–22, p. 3; 189–25, p. 7; 189–28, p.3)

In any event, whatever may have been the case when the proposal was issued in 1997, there is no dispute that occupational risk has declined as the incidence of TB in the population as a whole has declined. This is demonstrated by the fact that there has been a decline in TB among occupationally exposed workers that mirrors the decline in the population at large. The proposal noted that in the early 1990s, when the record shows that few employers were using infection control measures to protect their workers from exposure to TB, workplace exposures resulted in TB infections, disease and, in some cases death. (Exs. 187, pp. 95–96, 7–3; 5–16; 151–3; 151–15; 5–3; 7–136; 6–25) Healthcare workers represent the largest group of TB-exposed workers, and in the early years of TB recordkeeping, they were more likely than other workers to develop TB. (Exs. 187, pp. 105–107; 7–3; 5–16; 5–11; 151–3; 151–15) As the Society for Healthcare Epidemiologists of America (SHEA) noted, more recent data indicate that healthcare workers ''represent a small proportion of all cases and are not disproportionately represented in the TB caseload compared to their presence in the workforce'' (Ex. 183–15, p.1–2). IOM reported that for 1998, although healthcare workers accounted for 9% of

the working population of the U.S., these workers accounted for only 8% of TB cases among the working population, which does not appear consistent with these workers being at much higher risk of infection than the rest of the population. Moreover, from 1994 to 1998, the TB rate for health care workers declined almost 20%, from 5.6 to 4.6 per 100,000 population, while the rate for other workers remained steady at 5.2 per 100,000. (Ex. 187, p.89)

Because TB rates among healthcare workers vary demographically in a manner similar to rates among the general population, and because it is very difficult to determine whether any individual case was transmitted occupationally, many participants believed that much of the risk to these workers likely arises outside of work. For example, the Infectious Disease Society of America pointed to data ''suggest[ing] that community exposure was responsible for most conversions even at a hospital which cares for a large number of TB patients.'' (Ex. 183–1, p.2) IOM pointed out that foreign-born workers account for a very high percentage of TB cases in healthcare workers. (Ex. 187, p. 89) Many of these workers are from countries such as India and the Philippines, which have very high TB rates.

Increased implementation of TB controls has reduced TB levels.

The record contains virtually unanimous agreement on two crucial points. First, along with the spread of AIDS and an influx of immigrants from areas where TB is common, widespread complacency about TB and a consequent lack of resources focused on TB prevention contributed significantly to the 1985–1992 resurgence of the disease. (62 FR 54173, 54175; NY TR, p. 211) Second, the post-1992 decline in TB has resulted from public health and infection control measures taken as part of the intense Federally-coordinated response to the resurgence. (62 FR 54175, 54176; DC TR, pp. 767, 884) Primarily because of this CDC-coordinated anti-TB campaign, the public and occupational health communities better understand the factors creating risk of TB transmission and disease, are more knowledgeable about TB containment strategies, and are more aware of the importance of implementing those strategies. (Exs. 187, pp. 13–22, 82; 183–15, p. 1; TR NY p. 212)

Prominent among these TB control strategies are the recommendations in several CDC guidelines for preventing the transmission of TB. CDC updated its TB guidelines for health care settings (first issued in 1982) in 1990 and 1994. (Ex. 4B) The guidelines recommend measures such as early identification and isolation of individuals with infectious TB, prompt initiation of therapy for these individuals, the use of negative pressure ventilation in TB isolation rooms, the use of respiratory protection for health care workers performing high-hazard procedures or working in TB isolation rooms, and employee tuberculin skin testing and training. CDC issued additional guidelines for long term care facilities in 1990, for facilities dealing with homeless persons in 1992, and for correctional facilities in 1996, all locations where the resident populations have relatively high levels of infectious TB. (Exs. 3–35; 6–15; 7–284) As part of its outreach and compliance assistance efforts, OSHA notifies employers of these guidelines, and provides links to them on its own Web site.

Because TB is an airborne hazard, the CDC guidelines have recommended that exposed workers wear respirators. OSHA requires the use of respirators certified by CDC's National Institute for Occupational Safety and Health (NIOSH). See 29 CFR 1910.134; 29 CFR 1910.139 (1997)(to be revoked). In 1992, NIOSH recommended specific types of respirators for health care workers working around TB patients, and CDC's 1994 guidelines listed specific performance criteria that a respirator needed to meet to provide protection against TB. (Exs. 7–64; 4B) In 1995, NIOSH issued a new certification protocol for respirators, creating new classes of respirators that meet the CDC performance criteria. One new type of respirator is the N95, now the most frequently used respirator for TB protection. (Ex. 7–261)

The record shows that compliance with CDC's TB guidelines has increased significantly since OSHA began work on a TB standard in 1993. Compliance is most extensive in hospitals. Hospitals are where the greatest risk of TB exposure occurs, because most TB cases are diagnosed and treated in a hospital setting, and this diagnosis and treatment often involves the use of cough-inducing procedures such as sputum induction and bronchoscopies that are likely to expose workers to high concentrations of infectious material. During the rulemaking, the American Hospital Association (AHA) relied on the results of 1992 and 1996 surveys that it conducted in conjunction with CDC to show that ''hospitals have made significant progress in implementing control measures to prevent transmission of TB consistent with the 1994 CDC guidelines.'' (Ex. 17–454) As shown in Table 2, by 1996, the vast majority of hospitals were using isolation rooms meeting CDC's criteria, providing appropriate respiratory protection, and performing periodic skin testing of potentially exposed workers.

TABLE 2.—COMPARISON OF TUBERCULOSIS CONTROL MEASURES FOR 103 HOSPITALS THAT REPORTED MORE THAN SIX ADMISSIONS OF PATIENTS WITH TUBERCULOSIS IN 1992 CDC SURVEY AND THAT ALSO RESPONDED TO 1996 CDC SURVEY (EX. 187, P. 111)

	1992 number (%)	1996 number (%)
Engineering Controls:		
• Isolation rooms meeting CDC criteria	59/92 (64)	99/103 (96)
• Routine check of negative air pressure	42/85 (49)	96/99 (97)
• Monthly check of negative air pressure	5/35 (14)	76/90 (84)
Respiratory Protection [1]:		
• Nonfitted surgical mask	69/101 (68)	1/103 (1)
• Soft mask, molded or fitted	34/101 (34)	NA
• Particulate respirator	8/101 (98)	40/103 (39)
• N95	NA	85/103 (83)
Tuberculin Skin Testing:		
Testing by Worker Category:		
• Nurses	103/103 (100)	103/103 (100)
• Respiratory therapists	102/103 (99)	103/103 (100)
• House staff	65/81 (69)	65/73 (89)

TABLE 2.—COMPARISON OF TUBERCULOSIS CONTROL MEASURES FOR 103 HOSPITALS THAT REPORTED MORE THAN SIX ADMISSIONS OF PATIENTS WITH TUBERCULOSIS IN 1992 CDC SURVEY AND THAT ALSO RESPONDED TO 1996 CDC SURVEY (EX. 187, P. 111)—Continued

	1992 number (%)	1996 number (%)
• Attending physicians	43/86 (69)	65/94 (69)
• Students	55/95 (58)	74/97 (76)
Testing Elements:		
• After exposure incident	98/101 (97)	102/103 (99)
• Two-step testing	NA	77/98 (79)
• Maintain yearly reports	64/98 (65)	93/98 (95)

[1] Numbers add to more than one hundred because facilities may use more than one type of mask.

The record also shows increased compliance with TB control procedures in prisons and other correctional facilities. CDC published TB control guidelines for these facilities in June 1996, and surveys it conducted with National Institute of Justice between 1992 and 1997 showed an increasing implementation of TB control measures in correctional facilities. The surveys examined the implementation of recommended control provisions in the Federal Bureau of Prisons facilities, all 50 state systems, and a number of large local jail systems. Results showed that 90% of facilities screened new employees for TB, and 75% of those included periodic tuberculin skin testing. The use of negative pressure isolation rooms increased from 30% in 1993 to nearly 98% in 1997 (for Federal and State systems) and 85% (for local jail systems). The use of directly observed therapy for inmates with active TB disease increased from 77% to 98% for Federal and State systems and 84% to 95% for local jail systems (Ex. 187, p. 113–114). Although an AFSCME report of a 1997 survey of correctional facilities where its members were employed showed ''a wide variation of adherence to CDC guidelines from departments that had instituted rigorous programs throughout prison systems to those that had done very little,'' the survey covered a ''very small, nonrandom set'' of facilities, and does not contradict the conclusion that compliance in correctional facilities is increasing. (Ex. 189–23, p. 4; 187 p. 116) The evidence in the record indicates that both hospitals and correctional facilities improved their TB control practices significantly over the 1990s.

Taken together, survey results suggest, at a minimum, two conclusions. First, institutional departures from recommended tuberculosis control policies and procedures were common, if not the norm, in the late 1980s and early 1990s. Second, institutions—at least hospitals and correctional facilities—were taking tuberculosis control measures more seriously and reporting substantially higher rates of implementation of recommended measures in later years. (Ex. 187, p. 116).

Evidence about the use of infection control procedures in other types of settings also showed increasing levels of compliance, although generally not as high a level of compliance with CDC guidelines as was occurring in hospitals. (Ex. 187, pp. 114–117; DC TR, p. 676) AFSCME reported that, ''in non-hospital healthcare settings, [its] survey revealed inadequate to virtually non-existent TB control programs.'' (Ex. 189–23, p. 4) As noted above, however, IOM pointed out that this survey was of a ''very small, nonrandom set of respondents,'' only 23 long-term care facilities, 28 mental health facilities, and 28 social service agencies, and that its results ''must be viewed with considerable caution.'' (Ex. 187, p. 116) In contrast to the AFSCME survey, a number of participants provided evidence that voluntary implementation of the CDC TB guidelines had increased dramatically since 1994, even outside of hospitals. For example, Barbara Hood, testifying on behalf of the California Association of Homes and Services for the Aging stated:

> * * * many health care employers have implemented key control measures as recommended in CDC's 1994 TB guidelines and have incorporated these recommendations in their policies and procedures. This has improved screening and surveillance protocols for both residents and staff. As a result, nursing facility providers have significantly reduced the level of TB in long-term care organizations. (LA TR, pp. 124–125)

AHCA also asserted that many nursing and long-term care facilities have protected their workers effectively by implementing many of the CDC recommendations, even though these facilities are not necessarily complying with all the provisions in OSHA's proposal. (Ex. 17–756)

Particularly in nursing homes and other long-term care facilities, this trend has probably been accelerated by the need to comply with requirements for Medicare and Medicaid eligibility. A regulation that took effect in October 1992 requires each of these facilities ''to establish and maintain an infection control program * * * to help prevent the development and transmission of disease and infection.'' (42 CFR 483.65) IOM reports that, at least as of 2000, the guidelines used by state inspectors to determine compliance in nursing homes ''specifically require that facilities demonstrate procedures for early detection and management of residents with signs and symptoms of infectious tuberculosis, screening of residents and workers for tuberculosis infection and disease, and evaluation of workers exposed to tuberculosis in the workplace.'' (Exs. 187, p. 58, n. 3; 17–756) Moreover, the Centers for Medicare and Medicaid Services (CMS) recently inaugurated a new Program of All-inclusive Care for the Elderly (PACE), which requires participants to ''follow accepted policies and standard procedures with respect to infection control, including at least the standard precautions developed by the Centers for Disease Control and Prevention.'' (42 CFR 460.74)

The national efforts to reduce the incidence of TB in the general population have also protected workers by reducing the likelihood that they will encounter infectious TB at work. As the IOM points out, ''Overall, fewer cases of tuberculosis and less multidrug-resistant disease means less risk for nurses, doctors, correctional officers, and others who work for organizations that serve people who have tuberculosis or who are at increased risk for the disease.'' (Ex. 187, p. 104) The Society of Healthcare Epidemiologists of America (SHEA) also credits the efforts of public health officials, government agencies, professional organizations and clinicians for ''clearly put[ting] the United States back on the road to TB

elimination.'' (Ex. 183–15, p. 1) The effectiveness of all of these measures is demonstrated by a decline in TB among occupationally exposed workers that has exceeded the decline in the population at large. (Exs. 7–147; 7–148; 7–149; 7–173; 7–167; 151–15; 18–49A; 181–3; 18–53; 187, p. 89)

An OSHA standard would not substantially reduce transmission of TB from undiagnosed sources.

Finally, evidence in the rulemaking record indicates that, with the current level of compliance with CDC guidelines, the ''primary risk'' of occupational exposure to TB is from individuals with unsuspected and undiagnosed infectious TB. (Ex. 187, p. 2) One commenter, St. Joseph Mercy Hospital, called these exposures the ''Achilles heel'' of TB control efforts. (Ex. 17–881, p. 3) Although OSHA's proposed standard called for early identification and isolation of infectious TB patients, this early identification can be extremely difficult. (Exs. 5–4; 5–18; 6–27; 7–76; 7–77; 7–78; 7–79; 5–12) An OSHA standard must substantially reduce a significant risk, and OSHA believes it is unlikely that employers will identify enough of the currently undiagnosed TB cases their workers come in contact with to reduce the remaining occupational risk of TB infection substantially. *Industrial Union Department, AFL–CIO* v. *American Petroleum Institute, et al.*, 448 U.S. 607, 642, 653 (1980).

The record shows that there are a number of reasons that a client's or patient's infectious TB may not be recognized. (Exs. 17–11; 17–12; 17–36; 17–458) In some situations, the infectious person may not manifest evident signs and symptoms of TB. And even after receiving training, a worker who is not expecting to see TB, which is especially likely in an area where the disease is uncommon, may not recognize the significance of TB signs and symptoms. In other cases, an exposed employee may lack the clinical expertise or resources to identify a patient or client as a suspect TB case and make a referral for diagnosis.

Lack of recognition may also occur where a worker has contact with many patients or clients who have coughs or other possible TB symptoms. Also, workplaces such as drug treatment centers and homeless shelters operate with unique limitations, and rarely possess either the resources or the clinical expertise to identify and isolate TB cases in a timely manner. (Exs. 187, p. 132; 17–53; 17–76; 17–58; 17–12; DC TR, pp. 2019–2020, 2113, 2131; NY TR, pp. 610, 612; LA TR, pp. 598, 600, 601, 617, 630) They are also less likely to be able to distinguish between active TB disease and other medical conditions with similar symptoms.

As the Association for Professionals in Infection Control and Epidemiology (APIC) put it:

> Obviously, protecting workers against exposure to TB from patients is contingent upon suspecting that the patients have TB in the first place. Patients may initially enter a hospital for a different reason or show only vague symptoms of TB. Until diagnosed, these patients unwittingly expose probably dozens of individuals to their illness. (Ex. 17–671, p. 3)

APIC then reported on 17 outbreaks since 1960 where transmission to healthcare workers was reported, pointing out that 75.6% of the workers were infected by an undiagnosed and unsuspected TB patient. (Id.) The Home Health Services and Staffing Association (HHSSA) also asserted that 75% of TB transmissions from patients to healthcare workers are not preventable because, at the time of transmission, the patient's TB could not be readily identified or even suspected. (Ex. 17–673, p. 3) To the extent that these reports do not reflect advances made in infection control over the last decade, they may overstate the percentage of undiagnosable cases, but HHSSA's and APIC's conclusions about the significance of these cases are consistent with those of the IOM. Moreover, the case reports APIC submitted describe situations where transmissions have occurred, and OSHA's own review of these reports indicates that, even with a modern TB infection control program, a number of the source patients would still not have been diagnosed before healthcare workers were exposed to them.

These reports also show that occupational exposures to undiagnosed TB and potential disease transmission can occur in all settings, including hospitals that have implemented the CDC Guidelines. The IOM pointed out that, in locations such as hospital emergency rooms, exposure may occur before infectious individuals are recognized and isolated, and that infectious individuals may remain asymptomatic for some time. (Ex. 187, p. 135) Consistent with CDC guidelines, the proposal called for treating contacts as having suspected infectious TB if they had both a persistent cough lasting at least three weeks, and at least two of the following additional symptoms: bloody sputum, night sweats, weight loss, fever, and anorexia. (62 FR 54292–3).

First, for workers in residential settings such as nursing homes and correctional facilities, this criterion does not provide any protection in the first three weeks that a resident has symptoms and is not recognized as having TB. In some other settings, identification of infectious individuals depends on the self-reports of patients or clients to determine whether almost any of the symptoms are present. Several participants pointed out that, outside of health care settings, potentially infectious individuals who fear they will be denied a benefit (such as a shelter bed or substance abuse treatment), or be compelled to enter a coercive treatment situation, may feel a strong incentive not to respond honestly to questions about symptoms. (Exs. 18–22A, 18–57A; 183–15, p. 4; NY TR, p. 615; DC TR, pp. 2009; 2034; 2069)

Homeless shelters are a prime example of a population where many clients have the coughs, fevers, night sweats, weight loss, and other symptoms associated with TB. (NY TR, pp. 607–608; Chicago TR, pp. 710–711, 768, 789) These non-hospital settings do not diagnose, treat, or isolate individuals with active TB disease; at most, they screen clients for symptoms of infectious disease and transfer or refer those with suspect symptoms to facilities with appropriate diagnostic and isolation capabilities. (Exs. 17–50; NY TR, p. 697; Chicago TR, pp. 789–790; DC TR, pp. 1867–1868) They rarely possess any means to identify asymptomatic individuals. They often lack the resources even to provide all the services they believe their clients need, and may well resist transferring any of their limited resources to a TB screening program, particularly when, as noted above, the screening may engender fear or hostility in their clients. (Exs 18–22A, 18–57A; 17–50; 183–15, p. 3, NY TR, p. 703; Chicago TR, pp. 701–702, 713; DC TR, pp. 1910, 2046, 2069)

The bottom line is that no infection control regime, including that in OSHA's proposed standard, would have much effect on workplaces where the greatest source of exposure and risk is unsuspected and undiagnosed active TB disease.

The Need for an OSHA Standard

The major issue in the rulemaking was whether, in light of the ongoing decline in the national incidence of TB, the steps that employers were already taking, and the difficulty in identifying many infectious TB patients, there is a current justification for an OSHA rule on occupational exposure to TB. Many participants argued that the rule would not result in a meaningful additional reduction in risk. According to these commenters, the problem addressed by

OSHA's proposed standard has already largely been solved. APIC testified, ''Clearly, the TB crisis that OSHA is attempting to address has passed.'' (DC TR, p. 722). This sentiment was echoed by other commenters, such as the American Medical Association, Infectious Disease Society of America, Home Health Service Staffing Association, American Health Care Association, Society of Healthcare Epidemiologists of America, American Association of Homes and Services for the Aging, who also questioned the need for an OSHA standard in an era of declining TB cases. (Exs.17–719; 183–1; 17–673; 18–61; 17–666; 17–673). The American Lung Association's American Thoracic Society, stated:

> The [proposed] OSHA * * * TB standard, is based heavily on the CDC's 1994 guidelines. * * * The CDC guidelines were an appropriate response at the time they were formulated but the proposed OSHA standard will be far out of proportion to the risk by the time it is implemented and increasingly inappropriate and burdensome with each passing year if the current epidemiologic trends continue. (DC TR, pp. 1035–36)

In contrast, other commenters, such as the United Food and Commercial Workers Union and the Service Employees International Union (SEIU), argued that, because CDC's TB guidelines are not directly enforceable, there remain employers who have placed their workers at risk by failing to implement them fully. (DC TR, p. 676; Ex. 17–1089, p.1–2; DC TR, pp. 635–636). Some of these commenters, such as SEIU, pointed to the geographic variation in TB rates to support the argument that a standard is needed because not all employers are taking appropriate protective action. (Tr LA, pp. 245–246)

In response to these arguments, OSHA acknowledges that a standard is often the most efficient way of assuring that employers reduce their employees' exposure to specific hazards. TB is primarily a public health hazard, however, and occupational exposure at this time is in large part a function of the prevalence of active TB in the population at large. There has been a decade-long decline in TB prevalence, resulting in large part from the Federal resources devoted to public health and infection control measures that were implemented without an OSHA standard in effect.

OSHA believes this shows that, in the unique case of TB, there are powerful incentives for employers to continue to provide appropriate protection even without an OSHA TB standard. The ongoing Federal commitment to TB control provides them with a wealth of information and expert resources to assist in TB control efforts. Among other incentives, hospitals and nursing homes must have infection control plans to qualify for Medicaid and Medicare reimbursement, and are subject to annual reviews to verify their continuing compliance. (Ex 17–756, 42 CFR 482.42; 42 CFR 483.65) Facilities participating in CMS's PACE program must comply with ''at least'' the CDC guidelines. (42 CFR 460.74) The Joint Commission for the Accreditation of Healthcare Organizations (JCAHO), which many hospitals and nursing homes use to demonstrate qualification for Medicare and Medicaid reimbursement, also requires an infection control plan as a condition of accreditation. (Exs. 17–756; 187, p. 58; Chicago TR, p. 931) The record also shows, as does CDC's new TB elimination plan, that the sobering memory of the 1985–1992 TB resurgence is not likely to fade anytime soon, and that the complacency that led to that resurgence is unlikely to recur. (Ex. 187, p. 21; NY TR, p. 212)

Nor does OSHA believe that the facts that there are pockets of TB prevalence and a few states where TB rates have increased require it to promulgate a standard. First, the states with the highest levels of TB during the resurgence are also states that have been aggressive in implementing control measures, and are among the states where the most significant recent declines have occurred. From 1992 to 2002, only three states reported an increase in their TB rates, and these increases represent only an additional 106 TB cases (which is less than 1% of the total TB cases in the U.S). (Centers for Disease Control and Prevention, Trends in Tuberculosis Morbidity—United States, 1992–2002, MMWR 2003; 52: 217–222) These increases do not detract from the fact that, nationally, there are fewer TB cases and lower TB rates being reported each year. CDC's new plan for TB elimination, CDC's Response to *Ending Neglect*, directs resources specifically at localized areas and population groups who remain at higher risk for TB. (Centers for Disease Control and Prevention. *CDC's Response to Ending Neglect: The Elimination of Tuberculosis in the United States*. Atlanta, GA: U.S. Department of Health and Human Services, CDC; 2002) Even without a standard, OSHA can take appropriate enforcement action to address those situations where employers are not taking adequate steps to reduce their workers' TB exposure.

OSHA has additionally concluded that, as a practical matter, early identification of infectious TB patients will not occur enough more often than it already does to justify adoption of a standard. The fact that TB symptoms are neither universal nor unique to TB could also make OSHA enforcement of an early identification provision highly problematic. As the proposal recognized, identification of suspect cases requires the exercise of judgment. (62 FR 54247) Unless an employer simply fails to implement any identification criteria at all, it would be very difficult to establish when a violation occurs. As noted above, however, the record shows that most affected workplaces with the expertise and other resources to do so have already adopted programs to control exposure, including early identification of infectious TB patients, and OSHA will continue to use its general duty clause to require others to follow suit.

For employers without these resources, OSHA believes that providing assistance in exercising the judgment necessary for an effective early identification program can best be accomplished through outreach, consultation, and education efforts, and OSHA intends to provide this type of assistance. CDC's targeted guidelines already provide some guidance, and OSHA believes that the most effective approaches are likely to be the integrated ones that build on the CDC guidelines and target occupational TB transmission as part of a broader TB control program.

As noted above, workers are exposed to TB when they serve patients or clients who have infectious disease, and one of the most straightforward ways to reduce that exposure is to reduce the number of such contacts that occur by reducing the rate of infectious TB in the patient or client population. As CDC's most recent prevalence data show, ongoing TB reduction efforts have been remarkably effective in achieving this goal.

Nor is there any indication that this success is leading to the type of complacency and inattention that contributed to the last TB resurgence. CDC's new TB control plan takes full account of the ''scientific, programmatic, and health-sector developments of the last decade.'' This plan is focused strongly on the current demographic and epidemiological profile of TB, with one of its major goals being to reduce the global burden of TB. In *CDC's Response to Ending Neglect*, CDC explained that ''the heavy impact of TB in foreign-born persons living in this country'' is a major factor tempering its recent success in TB control.'' (CDC; 2002, p. 13) Now that foreign-born residents account for more than half the

incidence of TB in the United States, reducing TB in this population is more critical than ever to controlling TB domestically. CDC is much better suited than OSHA, which has authority only over domestic workplaces and employers, to address this increasingly important aspect of TB control.

OSHA believes its role in this process should be to continue with the initiatives that have already contributed to reducing the occupational risk of TB infection. OSHA will continue to provide both industry- and workplace-specific TB control information and guidance, through its website as well as targeted outreach activities. OSHA will also continue the successful enforcement policy, described in its TB Enforcement Directive and in several national, local and regional emphasis programs targeting TB risks, to make sure that employers protect their employees from TB infection. In fact, OSHA's experience in these programs has helped convince it of the high level of compliance with TB exposure safeguards. When appropriate, however, OSHA has cited these employers for violations of the general duty clause, the TB-specific respirator standard, or other applicable requirements. These citations, (32 of the general duty clause and 92 of the TB-specific respirator standard since the proposal was issued), have provided protection to a broad range of workers, including ambulance drivers, physicians, therapists, lab personnel, health care social workers, emergency medical technicians, support personnel, and morticians. The availability of this enforcement mechanism, coupled with OSHA's ongoing monitoring of TB-control efforts, will help prevent the widespread complacency of the mid-1980s from recurring, and will allow an expeditious response to any backsliding that does occur.

In summary, OSHA has concluded that the success of existing Federal and community programs to control TB has significantly diminished the need for a standard, and that promulgating a standard will not reduce the remaining occupational risk substantially. Under the leadership of the CDC, community, institutional, and occupational public health efforts, including OSHA's own continuing outreach and enforcement, have increased worker and employer awareness of the factors leading to TB infection and disease and led to an increased implementation of CDC's TB guidelines. OSHA also intends to continue to use its enforcement, outreach, and education resources to ensure that employers' TB control efforts remain effective.

Review Under Executive Order

This document has been reviewed by OMB pursuant to E.O. 12866.

Authority and Signature

This document was prepared under the direction of John L. Henshaw, Assistant Secretary of Labor for Occupational Safety and Health, U.S. Department of Labor, 200 Constitution Avenue, NW., Washington, DC, 20210. It is issued pursuant to sections 4,6, and 8 of the Occupational and Safety and Health Act of 1970 (29 U.S.C. 653, 655, 657), Secretary's Order 3–2000, and 29 CFR part 1911.

Signed at Washington, DC, this 19th day of December, 2003.

John L. Henshaw,

Assistant Secretary of Labor.

[FR Doc. 03–31845 Filed 12–30–03; 8:45 am]

BILLING CODE 4510–26–P

DEPARTMENT OF LABOR

Occupational Safety and Health Administration

29 CFR Part 1910

[Docket No. H–371]

RIN 1218–AA05

Respiratory Protection for M. Tuberculosis

AGENCY: Occupational Safety and Health Administration (OSHA), Labor.

ACTION: Final rule; revocation.

SUMMARY: OSHA is revoking ''Respiratory Protection for M. Tuberculosis'' (29 CFR 1910.139) which is simply a recodification of OSHA's 1971 General Industry Respiratory Protection standard that was revised in 1998. At the time of the revision of the 1971 standard, OSHA decided that, because its proposed standard for occupational exposure to TB, published three months earlier, included a comprehensive respiratory protection provision, the Agency would allow compliance with the previous respirator standard for TB protection until completion of the TB rulemaking. Thus, pending conclusion of the TB rulemaking, OSHA redesignated the old Respiratory Protection Standard in a new section entitled ''Respiratory Protection for M. tuberculosis''. However, in a document published elsewhere in this separate part of the **Federal Register**, OSHA is today withdrawing its proposed TB standard. Because this withdrawal concludes the TB rulemaking, OSHA is revoking the redesignated Respiratory Protection Standard, and will begin applying the General Industry Respiratory Protection Standard (29 CFR 1910.134) to respiratory protection against TB.

DATES: This revocation is effective December 31, 2003.

FOR FURTHER INFORMATION CONTACT: George Shaw, OSHA Office of Communication, Room N–3647, U.S. Department of Labor, 200 Constitution Avenue, NW., Washington, DC 20210. Telephone: (202) 693–1999.

SUPPLEMENTARY INFORMATION:

I. Background

On October 17, 1997, OSHA published its Notice of Proposed Rulemaking (NPRM) for Occupational Exposure to TB (62 FR 54160). In the proposal, the Agency made a preliminary determination that workers in hospitals, nursing homes, hospices, correctional facilities, homeless shelters, and certain other work settings were at significant risk of incurring TB infection while caring for their patients and clients or performing certain procedures. The Agency also preliminarily concluded that this significant risk can be minimized or eliminated using infection prevention and control measures that have been demonstrated to be highly effective in reducing or eliminating job-related TB infections. These measures included the use of respiratory protection when performing certain high-hazard procedures on infectious individuals.

On January 8, 1998 OSHA revised its 1971 General Industry Standard for Respiratory Protection (63 FR 1152). Because the 1997 TB proposal included all of the respiratory protection provisions that OSHA believed would be applicable to respirator use for TB protection, the Agency did not require this use to comply with the new § 1910.134 during the rulemaking proceedings on the TB proposal. Instead, pending conclusion of the TB rulemaking, OSHA redesignated the old § 1910.134 as § 1910.139, ''Respiratory protection for M. tuberculosis.''

However, OSHA is today withdrawing its proposed TB standard (*see* Occupational Exposure to Tuberculosis; Proposed Rule; Withdrawal published elsewhere in this **Federal Register**), and with this document is revoking 29 CFR 1910.139.

II. Reasons for the Revocation of 29 CFR 1910.139

OSHA is revoking 29 CFR 1910.139 because it was intended to apply only during the pendency of the TB rulemaking, and that rulemaking is being terminated. The standard being revoked is simply a recodification of OSHA's 1971 General Industry Respiratory Protection Standard, 29 CFR 1910.134, which was revised in 1998. (63 FR 1152, (January 8, 1998)). At the time of the revision, OSHA decided that, because the TB proposal issued three months earlier included a self-contained respiratory protection provision, the Agency would allow compliance with the previous respirator standard for TB protection until completion of the TB rulemaking. (62 FR 54289); (63 FR 1180). To accomplish this, OSHA redesignated the old § 1910.134 as § 1910.139, ''Respiratory protection for M. tuberculosis.'' OSHA made clear in both rulemakings, however, that it intended the respiratory protection requirements ultimately made applicable to TB protection to be consistent with the revised § 1910.134, and the TB proposal was itself consistent with that revision. (62 FR 54257, 54287–54288; 63 FR 1180). In fact, the relevant comments from the Respiratory Protection rulemaking were made part of the TB rulemaking. (Exs. 150–1 through 150–178). With this termination of the TB rulemaking, it is now appropriate for OSHA to begin applying the revised 29 CFR 1910.134 to respiratory protection against TB.

Applying the General Industry Respiratory Protection standard to the use of respirators for TB protection is supported by the records in both the TB and respirator rulemaking proceedings. OSHA noted in the proposed TB rule that one option was to apply the general respirator standard to TB protection. (62 FR 54257). A number of participants in the TB rulemaking urged OSHA to take this course. (*See, e.g.,* Exs. 17–215; 17–271; 17–455; 17–570; 17–906; 17–1145). The proposed TB standard's respiratory protection requirements were largely consistent with those in the revised general industry standard. One of the hazards the latter standard was designed to address is the ''inhalation of bacteria * * * including tuberculosis.'' (63 FR 1159).

The revised general industry standard reflects the Agency's evaluation of current knowledge and technology as they relate to effective respiratory protection programs. The revisions help to ensure that employers have sufficient guidance to select and maintain appropriate respiratory protection. Given the extensive rulemaking undertaken to establish these requirements, and the intensive review and consideration of all issues related to respiratory protection in that rulemaking, the Agency believes it is appropriate and necessary to ensure that employees exposed to TB have the same protections as employees exposed to other types of hazards in the workplace. All facilities that use respirators for any purpose other than TB protection are already required to comply with the revised respiratory protection standard. The revised standard has also been upheld in its entirety by the U.S. Court of Appeals for the Eleventh Circuit. *AISI* v. *OSHA,* 182 F.3d 1261, 1273 (11th Cir. 1999).

The new requirements in the revised respiratory protection standard include updating the facility's respirator program, complying with amended medical evaluation requirements, annual fit testing of respirators, and some training and recordkeeping provisions. These provisions were also included in the TB proposal, and the only one that elicited significant comment was the requirement for annual fit testing.

With regard to updating each facility's respiratory protection program,

§ 1910.139 provides the skeletal requirements for such a program, but does not elaborate on what would be required in each element. The revised respiratory protection rule provides employers with additional guidance on what constitutes an appropriate and effective program, giving employers a better road map to follow when relying on respiratory protection in the workplace. It is the Agency's view, supported by the Respiratory Protection rulemaking record, that an effective program requires a systematic approach to evaluating workplace conditions, selecting the appropriate respirator, ensuring the respirator fits, and maintaining the respirator properly. The revised standard specifies how this systematic approach is to be implemented in the workplace.

Similarly, § 1910.139 requires medical evaluation, but does not set forth the components of the evaluation, or how it is to be accomplished. The medical evaluation provisions of the revised § 1910.134 set forth the minimum requirements employers must implement to determine if employees are medically qualified to wear respirators in their places of work. The employer must provide a medical evaluation for each covered employee, performed by either a physician or another licensed health care professional. Information from the medical evaluation is to be used to determine the employee's eligibility to wear the respirator proposed for the employee. The employer must base the determination on the recommendation of the health care professional. Administration of the medical questionnaire in § 1910.134, Appendix C, is a further requirement.

The medical evaluation provisions of revised § 1910.134 are significantly better than the original standard. They ensure that the health care professional, the employee, and the employer are aware of the factors that must be considered in evaluating an employee's respiratory protection needs, and provide the tools to ensure appropriate decisions are made.

With regard to employee training, § 1910.139 states only that employees must be ''instructed and trained in the proper use of respirators and their limitations,'' with no provision for annual retraining. Revised § 1910.134 requires employers to provide effective training to employees who are required to use respirators. The training must be comprehensive, understandable and recur at least annually. Employers must provide the training before their employees are required to use the respirator. Topics to be covered include why the respirator is necessary, what the limitations of the equipment are, how to use the respirator in emergencies, how to use and care for the equipment, and how to recognize the medical signs and symptoms that may limit or prevent the use of respirators. OSHA has determined that these more detailed requirements regarding employee training will help to ensure that the training provided is appropriate and effective, thus leading to a more effective workplace respiratory protection program.

Section 1910.134 requires more recordkeeping than § 1910.139. Section 1910.134 consolidates recordkeeping requirements with respect to medical evaluations, fit testing and the respirator program into one section of the standard. Commenters agreed that such consolidation of requirements would improve understanding of the standard's recordkeeping obligations (Exs. 54–267; 54–286).

Both § 1910.139 and § 1910.134 recognize that fit testing is an important component of an effective respiratory protection program. Fit testing is necessary because a respirator that does not fit properly provides only the illusion of protection. While it has long been known that fit can affect respiratory protection significantly, particularly for these types of respirators that depend on filtering the contaminant (rather than providing a separate source of uncontaminated air), specific protocols for fit testing are a more recent development. The revised § 1910.134 reflects this newer technology, and provides specific guidance on appropriate fit testing procedures. OSHA believes that following these types of procedures is necessary to ensure that respirators are really providing the protection needed.

The frequency of fit testing was an issue in both the respiratory Protection and TB rulemakings, and it generated significant comment in both records. There was little dispute that some additional fit testing beyond the initial test is necessary because respirator fit can be affected by a number of factors, including the size and shape of a person's face, dental changes, changes in the types of movements required to perform work when wearing the respirator, and the presence of facial hair. As OSHA explained when it promulgated the annual retesting requirement in 29 CFR 1910.134, waiting more than a year between fit tests allows a substantial fraction of workers to lose the protection respirators provide (63 FR 1224). This is no less true when respirators are used for TB protection than it is when they are used for protection against other hazards.

Consistent with current practice, CDC guidelines and NIOSH recommendations, and the selection criteria in § 1910.134, OSHA anticipates that half-mask N95 air-purifying filtering facepiece respirators will be the primary type of respirator used for TB protection. This type of respirator has a securely-fitting facepiece that filters the air, preventing inhalation of contaminants. Effective protection requires a good face-to-facepiece seal in order to ensure that there are no gaps through which contaminated air can enter the facepiece and be breathed in by the worker. Thus in order to provide protection, the respirator must fit the employee well enough to prevent leakage from occurring. This is particularly important for a hazard such as TB that does not have any warning properties that would allow an employee to detect that it is being inhaled, *e.g.*, there is no odor that might indicate a breakthrough.

The proposed TB standard acknowledged these issues by proposing that fit testing be performed as follows. Each employee who would have been required to wear a tight-fitting respirator would have had to pass a fit test at the time of initial fitting of the respirator; whenever changes occurred in the employee's facial characteristics that affected the fit of the respirator; and whenever a different size or make of respirator was assigned for use by that employee. At a minimum, the proposal would have required fit tests to be conducted annually unless an annual medical evaluation (also required by the proposal) indicated that a fit test was not necessary. The revised respiratory protection standard imposes the same requirements, except that it does not require annual medical evaluations, and annual fit tests are required for all respirator users.

Several commenters supported the proposed provision allowing a licensed health care professional to determine the need for an annual fit test during a face-to-face evaluation. (*See, e.g.*, Exs. 17–671; 17–454; 17–932.) However, others argued compellingly that there are no objective data demonstrating that it is possible to determine whether a respirator fits by examining a person's face. (*See, e.g.*, Exs. 17–271; 17–697; 18–60A; 17–455; 17–768; 17–920).

A number of commenters argued that repeat fit testing should only be done when the respirator changes, or when there is a significant change in the employee's physical condition that may interfere with the facepiece seal (*see, e.g.*, Exs. 150–56; 150–69; 150–125).

Some infection control professionals cited additional costs and a perceived lack of benefits from repeating fit testing on an annual basis. (*See, e.g.*, Exs. 17–671–I; 17–671–X; 17–211; 17–464; 189–22; 183–15; 183–13.) In particular, the Infectious Disease Society of America cited studies by Blumberg *et al.* that examined tuberculin skin test conversion rates before and after the implementation of expanded TB control measures at a large metropolitan hospital. (Exs. 189, p. 22; 18–5300; 7–173.) The implementation of expanded controls, which included retrofitting rooms into negative-pressure isolation rooms, expanding respiratory isolation policies, 6-month skin testing of all health care workers, and the addition of NIOSH certified respiratory protection, led to a 90% reduction in skin test conversions. Because annual fit testing was not a part of the expanded infection control program, the IDSA asserted that these studies demonstrate that there is no benefit to annual fit testing.

The fact that a single study of workers whose respirators were fit tested only once did not show excess TB infections does not overcome the evidence supporting OSHA's conclusion in the revised respiratory protection standard that ''annual fit testing * * * is appropriate to protect employee health'' (63 FR 1224). The studies by Blumberg, *et al.* were not designed to study the efficacy of fit testing but rather the efficacy of an overall expanded TB infection control program in which many different protective measures were implemented simultaneously. Thus, it is difficult, if not impossible, to determine the relative efficacy of any one measure. Moreover, not all exposed workers would have been infected even without respirators. In the absence of periodic fit testing, there is no way to determine which of the exposed workers were wearing properly fitting respirators. It is the fit of a respirator that determines its effectiveness, and the record contains no evidence indicating that factors affecting fit are different for TB-exposed workers than they are for other workers.

A large number of participants in both the respiratory protection and TB rulemakings supported annual fit testing (*see, e.g.*, Exs. 150–23; 150–24; 150–27; 150–45; 150–52; 150–53; 150–58; 150–74; 150–89; 150–93; 150–96; 150–103; 150–117; 150–123; 150–45; 150–52; 150–141; Respiratory Protection Hearing TR, pp. 1573, 1610, 1653, 1674). These participants agreed that fit is not static, and that a one-time, initial fit test without a requirement for annual re-fitting does not ensure that the appropriate level of protection would continue to be provided over time. A number of participants in the TB rulemaking suggested that the respiratory protection standard be applied in its entirety for protection from TB exposures. For example, Health Evaluation Programs, Inc. indicated:

> Respirator fit testing is not a hazard-specific or industry specific activity. It is specific to tight-fitting respirators worn by people. OSHA recognized this when the new Respiratory Standard 29 CFR 1910.134 was released on January 8, 1998. The fit testing provisions of this new standard replace those found in the various substance-specific OSHA standards. Likewise, there is no reason to make an exception for TB. The respirator either provides the level of fit it is rated for, or it does not. (Ex. 17–570)

This commenter went on to state:

> OSHA's responsibility to base a final standard on the best respirator information available can best be served by incorporating what OSHA has already learned and decided regarding respirator fit testing frequency.

Another commenter, Certified Industrial Hygienist David L. Spelce, noted the particular aspects of TB exposures that indicate fit testing is necessary to ensure proper fit for protective purposes, as well as reinforcing the training aspects of fit testing that help employees don respirators appropriately:

> Annual fit testing provides the opportunity for employees to receive feedback on how well they are donning their respirator. TB droplet nuclei have no warning properties such as taste, odor, or irritation. Employees cannot detect if TB droplet nuclei leak into their respirators. Qualitative fit test challenge agents are detectable by odor, taste, or irritation and provide instant feedback as to how well the respirator fits and if the respirator was properly donned. Quantitative fit tests also provide instant feedback to employees through instrumentation. Employees need fit testing annually as part of training to ensure they don the respirators correctly so that the respirator properly seals to their face. Fit testing is one of the respirator program elements that is essential to ensure the respirators issued to employees provide the protection factor assigned to that particular class of respirator. (Ex. 17–920)

(*See also* Exs. 17–455; 17–591; 17–717; 18–53; 183–7).

Some commenters who supported the concept of periodic fit testing suggested varying time intervals for that testing, either more or less frequent than annually. (Exs. 150–16; 150–55; 150–124; 54–290.) NIOSH, in addition to its support for applying all of the provisions of the revised § 1910.134 to TB exposures, also supported periodic fit testing for those exposures. (Exs. 18–60A; 189–36.) NIOSH suggested that, in the absence of TB-specific data on the appropriate fit testing interval, the ''record for and the provisions of 29 CFR 1910.134 [would] be the best guide.'' (Ex. 18–60A.)

It should also be noted that the annual fit testing requirement of the revised respiratory protection standard was specifically challenged in court, and was upheld. The court concluded that the requirement is supported by substantial evidence in the record, even though ''some evidence'' indicated that such frequent retesting might not be necessary. 182 F.3d at 1273.

In summary, OSHA believes that the provisions of revised § 1910.134 represent the Agency's assessment of the best information available at the time that rule was issued to ensure that respiratory protection in the workplace is effective. In order to extend similar protection to workers exposed to TB in the workplace, OSHA will apply all of the provisions of § 1910.134, including annual fit testing to TB exposures. Because of the current widespread adherence to § 1910.134, and the ongoing nationwide decline in active TB, the Agency believes the rulemaking records for both the revised respiratory protection standard and the proposed TB standard support such an approach to respiratory protection.

III. Summary of the Final Economic Analysis and Regulatory Flexibility Certification

Introduction

By including TB-related respirator use in Section 134, OSHA is imposing some new requirements on employers who require their employees to use respirators for this purpose. However, this action is not a significant rulemaking under Executive Order 12866, or a ''major rule'' under the Unfunded Mandates Reform Act of 1995 (2 U.S.C. 1501) or Section 801 of the Small Business Regulatory Enforcement Fairness Act of 1996 (5 U.S.C. 601). Even though this action does not meet any of the criteria for an economically significant or major rule specified by the Executive Order or relevant statutes, as shown in the remainder of this summary of the Final Economic Analysis and Regulatory Flexibility Certification, it was reviewed by OMB pursuant to E.O. 12866. (The full analysis this summary relies upon has been entered into the docket as Ex. 192.)

Affected Establishments

The scope of this action is limited to establishments in the health services industry (SIC 80) that follow the CDC guidelines and provide respiratory protection for employees potentially exposed to tuberculosis. These

establishments are primarily hospitals. To the extent that patients with active tuberculosis may be treated in other health services facilities, such as those that may be affiliated with nursing homes, correctional facilities, or substance abuse treatment facilities, these may also be potentially affected by this action.

An estimated 6,500 establishments are potentially affected by this action. The employees who would be covered are those using respirators for protection against occupational exposure to TB. Unfortunately, there are no data showing exactly how many persons use respirators for the purpose of protecting against occupational exposure to tuberculosis. For the purposes of this analysis, OSHA is using a BLS estimate of the number of persons using filtering face piece respirators in the health care sector. This results in an estimate of 638,000 affected employees. Using this estimate overestimates the number of respirator users using respirators for occupational exposure to TB by including respirator users in unaffected sectors and by including employees using respirators for reasons other than occupational exposure to TB. However, the estimate may exclude some employees who should be using respirators for occupational exposure to TB and are not doing so.

An estimated 5,312 of the potentially affected establishments are small entities. Small entities were identified in accordance with the definitions established by the Small Business Administration, as specified in the Regulatory Flexibility Act. These small entities employ approximately 457,000 of the employees potentially affected by this action.

Benefits

The employees covered by this action are those using respirators for protection against potential occupational exposure to tuberculosis. The reduction in risk achieved through compliance with the requirements of this action will result in reductions in the numbers of infections, active disease cases, and fatalities occurring among the covered workers. Although the employees working in establishments covered by this action will be the primary beneficiaries of the increased protection provided by the standard, many other individuals will also benefit from the standard because tuberculosis is a communicable disease.

For the final respirator program standard, OSHA concluded based on the best available evidence that from 5 to 50 percent of employees would lack a proper fit without annual fit testing. OSHA further concluded that overall, moving from full compliance with the old standard to full compliance with the new standard would reduce exposures by 27 percent on average across all employees covered by the respirator protection program. OSHA estimates that this action will have similar effects in reducing the number of infections, active disease cases, and fatalities occurring among the covered workers.

Technological Feasibility

In accordance with the provisions of the OSH Act, OSHA has reviewed the requirements of this action and has assessed their technological feasibility. As a result of this review, OSHA has determined that fulfilling the resulting requirements of this action is technologically feasible.

Compliance with the requirements of the action can be achieved with methods and measures that have already been developed and implemented in many establishments already under the respirator protection standard. As established in the final respiratory protection standard, the standard's provisions in the respirator program standard require only technology that is currently and readily available and widely in use. There is no barrier to applying these technologies in a health care setting. In fact, the requirements added by this action are already applicable to and have already been implemented in many of the affected health care establishments to the extent that any use of respirator protection is occurring for purposes other than protection from occupational exposure to tuberculosis.

Costs of Compliance

When OSHA promulgated its final respiratory protection standard in 1998, all potentially affected establishments and employees, including those in the health services industry and those using respirators only for protection from tuberculosis, were included in the analysis of the costs of compliance and potential impacts. This was done because of uncertainty as to the extent to which respirators were being used for protection against occupational exposure to tuberculosis. Thus, the conclusions and determinations regarding impacts and feasibility associated with the provisions of the standard for these establishments have already been established by the evidence in the record and other documents and decisions associated with the rulemaking. Nevertheless, the final economic analysis for this action analyzes the full economic impacts of this action alone. Using the estimate of the number of respirator users provided by BLS, which probably overestimates the number of affected employees, the total annualized estimated costs for this action are $11.7 million, as shown in Table 1. The largest component of the costs is comprised of the requirements associated with employee fit-testing and training (which OSHA assumes will be done at the same time), which account for about 92 percent of the total costs, or $10.7 million. Costs associated with revising respirator programs and with the recordkeeping requirements have an estimated annualized cost of about $1 million. Given these costs, this action is not an economically significant rule with respect to E0 12866.

TABLE 1.—COMPLIANCE COSTS ASSOCIATED WITH REVISED REQUIREMENTS FOR RESPIRATORY PROTECTION

Type of cost	Annualized incremental costs
Respirator Program	$325,000
Fit Testing And Training	10,716,719
Recordkeeping	638,000
Total	11,679,719

Economic Feasibility

In order to assess the nature and magnitude of economic impacts, OSHA compares the estimated costs of compliance to industry revenues and profits. The estimated compliance costs represent less than 0.005 percent of the revenues of the affected establishments in the hospital sector. The estimated compliance costs also represent about 0.08 percent of profits among affected for-profit establishments. For these establishments, the costs of compliance with the OSHA action would also be economically feasible. The affected establishments face more significant increases in costs or reductions in revenues on a continuing basis, through changes in rent, labor costs, utility costs, and costs of other resources purchased, through changes in levels of donations and contributions provided, and through changes in government funding levels. Even if such costs cannot be passed on to consumers, changes in revenues or profits of this magnitude will not threaten the existence or competitive structure of an industry [the test for economic feasibility stated in *United Steelworkers of America* v. *Marshall,* 647 F.2d 1189, 1272 (D.C. Circuit 1980)].

Regulatory Flexibility Screening Analysis

OSHA also analyzed the potential economic impacts of this action on

small entities (as defined in accordance with SBA criteria) and on very small establishments (those with fewer than 20 employees). For small entities as defined by SBA criteria, the costs represent 0.008 percent of revenues and 0.21 percent of profits (for those entities which are not nonprofits). For small entities with fewer than 20 employees, the cost also represents 0.008 percent of revenues and 0.21 percent of profits (for those entities which are not nonprofits). OSHA's Procedures define a significant impact as one in which the costs exceed 1 percent of revenues or 5 percent of profits. OSHA therefore certifies that this final regulation will not have a significant impact on a substantial number of small entities.

Unfunded Mandates Analysis

OSHA reviewed this action according to the Unfunded Mandates Reform Act of 1995 (UMRA) (2 U.S.C. 1501 *et seq.*) and Executive Order 12875. As discussed above in the Final Economic Analysis and Regulatory Flexibility Certification of this preamble, the Agency has determined that this action imposes less than $100 million in costs in any given year on either private or public sector entities. As a result, this is not a major rule under UMRA. OSHA standards do not apply to state and local governments, except in states that have voluntarily elected to adopt a State Plan approved by the Agency. Consequently, this action does not meet the definition of a ''Federal intergovernmental mandate'' (see section 421(5) of the UMRA (2 U.S.C. 658(5))). In conclusion, this action does not mandate that state, local, and tribal governments adopt new, unfunded regulatory obligations.

Paperwork Review

The paperwork burdens for this action were included in the final standard on Respiratory Protection, published January 8, 1998 (63 FR 1152). The OMB control number is 1218–0019.

Environmental Impacts

The provisions of this action have been reviewed in accordance with the requirements of the National Environmental Policy Act (NEPA) of 1969 [42 U.S.C. 432, *et seq.*], the Council on Environmental Quality (CEQ) NEPA regulations [40 CFR part 1500], and OSHA's DOL NEPA Procedures [29 CFR part 11]. As a result of this review, OSHA has determined that this action will have no significant adverse effect on air, water, or soil quality, plant or animal life, use of land, or other aspects of the environment.

Authority and Signature

This document was prepared under the direction of John L. Henshaw, Assistant Secretary of Labor for Occupational Safety and Health, U.S. Department of Labor, 200 Constitution Avenue, NW., Washington, DC, 20210. It is issued pursuant to sections 4, 6, and 8 of the Occupational and Safety and Health Act of 1970 (29 U.S.C. 653, 655, 657), Secretary's Order 3–2000, and 29 CFR part 1911.

Signed at Washington, DC, this 19th day of December, 2003.

John L. Henshaw,

Assistant Secretary of Labor.

■ For the reasons set forth in the preamble, 29 CFR part 1910, Subpart I is amended as follows:

PART 1910—[AMENDED]

■ 1. The authority citation for Subpart I of part 1910 is revised to read as follows:

Authority: Sections 4, 6 and 8, Occupational Safety Act of 1970 (29 U.S.C. 653, 655, 657); Secretary of Labor's Order 12–71 (36 FR 8754), 8–76 (41 FR 25059), 9–83 (48 FR 35736), 1–90 (55 FR 9033), 6–96 (62 FR 111), or 5–2002 (67 FR 65008), as applicable. Sections 1910.132, 1910.134, and 1910.138 also issued under 29 CFR part 1911. Sections 1910.133, 1910.135, and 1910.136 also issued under 20 CFR part 1911 and 5 U.S.C. 553.

§ 1910.139 [Removed]

■ 2. Section 1910.139 is removed.

[FR Doc. 03–31846 Filed 12–30–03; 8:45 am]

BILLING CODE 4510–26–P

Federal Register

Wednesday,
December 31, 2003

Part IV

Environmental Protection Agency

40 CFR Part 69

Special Exemption From Requirements of the Clean Air Act for the Territory of United States Virgin Islands; Final Rule and Proposed Rule

ENVIRONMENTAL PROTECTION AGENCY

40 CFR Part 69

[Region 2 Docket No. VI–5–265 B, FRL–7605–6]

Special Exemption From Requirements of the Clean Air Act for the Territory of United States Virgin Islands

AGENCY: Environmental Protection Agency.

ACTION: Direct final rule.

SUMMARY: The Environmental Protection Agency (EPA) is announcing approval of a petition, from the Governor of the Virgin Islands (US VI), which seeks an exemption of the Clean Air Act (CAA) section 165(a) requirement to obtain a Prevention of Significant Deterioration (PSD) permit to construct prior to construction of a new gas turbine at the Virgin Islands Water and Power Authority (VIWAPA) St. Thomas facility. This exemption allows for construction, but not operation, of Unit 23 prior to issuance of a final PSD permit.

DATES: This direct final rule is effective on March 1, 2004, without further notice, unless EPA receives adverse comment by January 30, 2004. If any adverse comments are received, EPA will publish a timely withdrawal of the direct final rule in the **Federal Register** and inform the public that the rule will not take effect.

ADDRESSES: Comments may be submitted either by mail or electronically. Written comments should be mailed to Steven C. Riva, Chief, Permitting Section, Air Programs Branch, Environmental Protection Agency, Region 2 Office, 290 Broadway, New York, New York 10007–1866. Electronic comments could be sent either to *Riva.Steven@epa.gov* or to *http://www.regulations.gov* which is an alternative method for submitting electronic comments to EPA. Go directly to *http://www.regulations.gov*, then select ''Environmental Protection Agency'' at the top of the page and use the ''go'' button. Please follow the on-line instructions for submitting comments.

Copies of the Governor's petition and submittals relied upon in the approval process are available at the following addresses for inspection during normal business hours:

Environmental Protection Agency, Region 2 Office, Air Programs Branch, 290 Broadway, New York, New York 10007–1866, Attn: Umesh Dholakia.

Environmental Protection Agency, Region 2 Office, Caribbean Field Office, Centro Europa Building, Suite 417, 1492 Ponce de Leon Avenue, Stop 22, San Juan, Puerto Rico 00907–4127, Attn: John Aponte.

The U. S. Virgin Islands Department of Planning and Natural Resources (VIDPNR), Division of Environmental Protection, Cyril E. King Airport, Terminal Building, Second Floor, St. Thomas, U.S. Virgin Islands 00802, Attn: Leslie Leonard.

FOR FURTHER INFORMATION CONTACT: Umesh Dholakia, Environmental Engineer, Air Programs Branch, Division of Environmental Protection and Planning, Environmental Protection Agency, Region 2 Office, 290 Broadway, 25th Floor, New York, New York 10007–1866, (212) 637–4023 or at *Dholakia.Umesh@epa.gov.*

SUPPLEMENTARY INFORMATION: The following table of contents describes the format for the **SUPPLEMENTARY INFORMATION** section:

I. What Action Is EPA Taking Today?
II. What are the Regulatory Requirements for Authorizing an Exemption under the CAA?
III. What are the Bases for the Petitioner's Request?
IV. What Is EPA's Analysis of the Petition?
V. What is EPA's Conclusion?
VI. Statutory and Executive Order Review

I. What Action Is EPA Taking Today?

EPA is approving a petition from the U.S. VI Governor seeking an exemption of the CAA requirement to obtain a PSD permit to construct prior to commencing construction of a new gas turbine at the VIWAPA St. Thomas facility.

Pursuant to section 325(a) of the CAA, on July 21, 2003, the Governor of the U.S. VI filed a petition with the Administrator seeking an exemption from the CAA section 165(a) PSD requirement to obtain a PSD permit to construct prior to commencing construction. The Governor requested the exemption on behalf of VIWAPA so that it can proceed, as quickly as possible, to construct Unit 23, a 36 megawatt (MW) gas turbine at its St. Thomas facility.

This exemption will allow for construction, not operation, prior to issuance of a final PSD permit, of Unit 23 at the VIWAPA St. Thomas facility.

II. What Are the Regulatory Requirements for Authorizing an Exemption Under the CAA?

Section 325(a) of the CAA provides the Administrator of EPA the authority to exempt sources in the U.S. VI from any requirement under the Act other than section 112 or any requirement under section 110 or part D necessary to attain or maintain National Ambient Air Quality Standard (NAAQS) provided the Administrator determines that compliance is not feasible due to unique geographical, meteorological or economic factors or such other factors deemed significant.

III. What Are the Bases for the Petitioner's Request?

The Petitioner contends that granting this exemption will not impact upon compliance with any requirement under sections 112, 110, or part D of the Act necessary to attain or maintain National Ambient Air Quality Standards. To support this contention, petitioner first acknowledges that because the exemption will not authorize operation of the unit until after receipt of the PSD permit, the exemption will not result in any violations of sections 112, 110, or part D of the Act necessary to attain or maintain a NAAQS. In addition petitioner contends that modeling, submitted in support of the permit application for the unit and supplemented since that application, demonstrates that NAAQS and PSD increments will continue to be preserved if both the new unit and all other existing units on St. Thomas are operating at maximum permitted capacity burning.

Petitioner further asserts that the exemption should be granted because of severe geographic constraints on the U.S. VI power system and because of a power crisis on St. Thomas. A summary of these assertions appears below:

a. Geographic Constraints

The petitioner contends that the exemption is necessary because of severe geographic constraints on the U.S. VI power system. The petition states that the VIWAPA St. Thomas facility is unable to interconnect with a larger power supply grid. Furthermore, the petition states that the distance between St. Thomas and St. Croix prohibit interconnection between the two VIWAPA plants. Thus, the petitioner explains, St. Thomas is serviced by a single power plant.

The petitioner also contends that when significant problems occur units must be shipped off-island for inspection and repair because vendors who provide such services are not located within the U.S. VI. The reasons it provides for this are that vendors do not have inspection and repair facilities in the U.S. VI. Thus, the petition states, major outages extend longer and cost more to correct than they would on the mainland. The petitioner explains that

to account for the need to send units off-island for repair, VIWAPA developed a policy and practice of attempting to maintain sufficient reserve capacity. The petitioner goes on to state that because of the long-term loss of one unit (Unit 11) for major repairs and the imminent major repair of another unit (Unit 22), the maximum capacity of all remaining units on St. Thomas is about to drop significantly and therefore the petitioner anticipates a number of scenarios in which there will not be sufficient reserve capacity for powering St. Thomas. The petitioner points out that this will exacerbate an already problem-ridden power supply.

b. Power Crisis on St. Thomas

The petition claims that VIWAPA ''no longer has sufficient capacity to ensure a continuous power supply sufficient to meet public needs. Consequently the island has been experiencing frequent power outages whenever a major unit is forced out or is taken out of service for maintenance.''

The petitioner states that with Units 11 and 22 unavailable, whenever there is an outage of Unit 13 alone, or an outage of a combination of any two remaining units except 12 and 14, a serious power outage will occur. The petitioner claims the age and unreliability of a number of VIWAPA's units resulted in significant blackouts over the past 12 months even though Units 11 and 22 were available for service. These assertions are documented in three tables attached to the petition.

IV. What Is EPA's Analysis of the Petition?

EPA has reviewed the modeling submitted by VIWAPA in support of its application for a permit to construct and operate Unit 23 and in support of this petition and has determined that authorizing this exemption will not impact upon compliance with any requirement under sections 112, 110, or part D of the Act necessary to attain or maintain a NAAQS or PSD increment.

Upon consideration of VIWAPA's contentions, EPA has determined that the petition presents unique geographic and economic circumstances which meet the section 325 criteria for authorizing an exemption from the CAA section 165(a) requirement to obtain a PSD permit to construct prior to commencing construction of Unit 23 at the VIWAPA St. Thomas facility.

V. What Is EPA's Conclusion?

The EPA is approving the petition for an exemption of the CAA section 165(a) requirement to obtain a PSD permit to construct prior to commencing construction of a new gas turbine, Unit 23, at the VIWAPA St. Thomas facility. This exemption will allow for the construction, but not the operation, of Unit 23 prior to issuance of a final PSD permit.

EPA is relying on the Governor's assertion that the construction and ultimate operation of Unit 23 should provide a reliable baseload which will give VIWAPA flexibility to meet electrical demand and that the additional capacity provided by this unit would be sufficient to allow for both planned and unplanned outages of generating units at the VIWAPA St. Thomas facility. EPA believes that by accelerating the time period by which this unit can be constructed, this rulemaking may increase VIWAPA's potential to provide more reliable power in St. Thomas.

The EPA is publishing this direct final rule without prior proposal because the Agency views this as a noncontroversial approval and anticipates no adverse comments. However, in the proposed rules section of this **Federal Register** publication, EPA is publishing a separate document that will serve as the proposal to approve this same petition should adverse comments be filed. This final rule will be effective March 1, 2004, without further notice unless the Agency receives relevant adverse comments by January 30, 2004.

If the EPA receives any adverse comments, EPA will publish a notice withdrawing the final rule and inform the public that the rule did not take effect. All public comments received will then be addressed in a subsequent final rule based on the proposed rule. The EPA will not institute a second comment period on the proposed rule. Parties interested in commenting on the proposed rule should do so at this time. If no such comments are received, the public is advised that this rule will be effective on March 1, 2004, and no further action will be taken on the proposed rule.

VI. Statutory and Executive Order Review.

A. Executive Order 12866, Regulatory Planning and Review

The Office of Management and Budget (OMB) has exempted this regulatory action from Executive Order 12866, entitled ''Regulatory Planning and Review.''

B. Paperwork Reduction Act

Under the Paperwork Reduction Act, 44 U.S.C. 3501 *et seq.*, OMB must approve all ''collections of information'' by EPA. The Act defines ''collection of information'' as a requirement for ''answers to * * * identical reporting or recordkeeping requirements imposed on ten or more persons * * *'' 44 U.S.C. 3502(3)(A). Because the exemption only applies to one company, the Paperwork Reduction Act does not apply.

C. Regulatory Flexibility Act

The Regulatory Flexibility Act (RFA) generally requires an agency to conduct a regulatory flexibility analysis of any rule subject to notice and comment rulemaking requirements unless the agency certifies that the rule will not have a significant economic impact on a substantial number of small entities. Small entities include small businesses, small not-for-profit enterprises, and small governmental jurisdictions.

This rule will not have a significant impact on a substantial number of small entities because the exemption applies to only one source and does not create any new requirements but simply postpones requirements that will be met. This Federal exemption does not create any new requirements; therefore, I certify that this action will not have a significant economic impact on a substantial number of small entities.

D. Unfunded Mandates Reform Act

Under section 202 of the Unfunded Mandates Reform Act of 1995 (''Unfunded Mandates Act''), signed into law on March 22, 1995, EPA must prepare a budgetary impact statement to accompany any proposed or final rule that includes a Federal mandate that may result in estimated costs to State, local, or tribal governments in the aggregate; or to the private sector, of $100 million or more. Under section 205, EPA must select the most cost-effective and least burdensome alternative that achieves the objectives of the rule and is consistent with statutory requirements. Section 203 requires EPA to establish a plan for informing and advising any small governments that may be significantly or uniquely impacted by the rule.

EPA has determined that the approval action does not include a Federal mandate that may result in estimated costs of $100 million or more to either State, local, or tribal governments in the aggregate, or to the private sector. This Federal action proposes to approve an exemption under Federal law, and imposes no new requirements. Accordingly, no additional costs to State, local, or tribal governments, or to the private sector, result from this action.

E. Executive Order 13132, Federalism

Federalism (64 FR 43255, August 10, 1999) revokes and replaces Executive Orders 12612 (Federalism) and 12875 (Enhancing the Intergovernmental Partnership). Executive Order 13132 requires EPA to develop an accountable process to ensure ''meaningful and timely input by State and local officials in the development of regulatory policies that have federalism implications.'' ''Policies that have federalism implications'' is defined in the Executive Order to include regulations that have ''substantial direct effects on the States, on the relationship between the national government and the States, or on the distribution of power and responsibilities among the various levels of government.'' Under Executive Order 13132, EPA may not issue a regulation that has federalism implications, that imposes substantial direct compliance costs, and that is not required by statute, unless the Federal government provides the funds necessary to pay the direct compliance costs incurred by State and local governments, or EPA consults with State and local officials early in the process of developing the proposed regulation. EPA also may not issue a regulation that has federalism implications and that preempts State law unless the Agency consults with State and local officials early in the process of developing the proposed regulation.

This rule will not have substantial direct effects on the States, on the relationship between the national government and the States, or on the distribution of power and responsibilities among the various levels of government, as specified in Executive Order 13132, because it merely approves an exemption from a Federal standard, and does not alter the relationship or the distribution of power and responsibilities established in the Clean Air Act. Thus, the requirements of section 6 of the Executive Order do not apply to this rule.

F. Executive Order 13175, Coordination With Indian Tribal Governments

Executive Order 13175, entitled ''Consultation and Coordination with Indian Tribal Governments'' (65 FR 67249, November 9, 2000), requires EPA to develop an accountable process to ensure ''meaningful and timely input by tribal officials in the development of regulatory policies that have tribal implications.'' This proposed rule does not have tribal implications, as specified in Executive Order 13175.

Today's rule does not significantly or uniquely affect the communities of Indian tribal governments. This action does not involve or impose any requirements that affect Indian tribes. Thus, Executive Order 13175 does not apply to this rule.

G. Executive Order 13045, Protection of Children From Environmental Health Risks and Safety Risks

Protection of Children from Environmental Health Risks and Safety Risks (62 FR 19885, April 23, 1997), applies to any rule that: (1) Is determined to be ''economically significant'' as defined under Executive Order 12866, and (2) concerns an environmental health or safety risk that EPA has reason to believe may have a disproportionate effect on children. If the regulatory action meets both criteria, the Agency must evaluate the environmental health or safety effects of the planned rule on children, and explain why the planned regulation is preferable to other potentially effective and reasonably feasible alternatives considered by the Agency.

This rule is not subject to Executive Order 13045 because it does not involve decisions intended to mitigate environmental health or safety risks.

H. Executive Order 13211, Actions That Significantly Affect Energy Supply, Distribution, or Use

This rule is not subject to Executive Order 13211, ''Actions Concerning Regulations That Significantly Affect Energy Supply, Distribution, or Use'' (66 FR 28355, May 22, 2001) because it is not a significant regulatory action under Executive Order 12866.

I. National Technology Transfer and Advancement Act

Section 12 of the National Technology Transfer and Advancement Act (NTTAA) of 1995 requires Federal agencies to evaluate existing technical standards when developing a new regulation. To comply with NTTAA, EPA must consider and use ''voluntary consensus standards'' (VCS) if available and applicable when developing programs and policies unless doing so would be inconsistent with applicable law or otherwise impractical. The EPA believes that VCS are inapplicable to this action. Today's action does not require the public to perform activities conducive to the use of VCS.

J. Congressional Review Act

The Congressional Review Act, 5 U.S.C. 801 *et seq.*, as added by the Small Business Regulatory Enforcement Fairness Act of 1996, generally provides that before a rule may take effect, the agency promulgating the rule must submit a rule report, which includes a copy of the rule, to each House of the Congress and to the Comptroller General of the United States. Section 804 exempts from section 801 the following types of rules: (1) Rules of particular applicability; (2) rules relating to agency management or personnel; and (3) rules of agency organization, procedure, or practice that do not substantially affect the rights or obligations of non-agency parties. 5 U.S.C. 804(3). EPA is not required to submit a rule report regarding this action under section 801 because this is a rule of particular applicability exempting Virgin Islands Water and Power Authority's St. Thomas facility, Unit 23 from obtaining a PSD permit to construct.

K. Other

Under section 307(b)(1) of the Clean Air Act, petitions for judicial review of this action must be filed in the United States Court of Appeals for the appropriate circuit by March 1, 2004. Filing a petition for reconsideration by the Administrator of this final rule does not affect the finality of this rule for the purposes of judicial review nor does it extend the time within which a petition for judicial review may be filed, and shall not postpone the effectiveness of such rule or action. This action may not be challenged later in proceedings to enforce its requirements. (*See* section 307(b)(2).)

List of Subjects in 40 CFR Part 69

Environmental protection, Air pollution control.

Dated: December 23, 2003.

Michael O. Leavitt,

Administrator.

■ Part 69 of chapter I, title 40 of the Code of Federal Regulations is amended to read as follows:

PART 69—[AMENDED]

■ 1. The authority citation for part 69 continues to read as follows:

Authority: Section 325, Clean Air Act, as amended (42 U.S.C. 7625–1).

■ 2. Section 69.41 is amended by adding paragraph (h) to read as follows:

§ 69.41 New exemptions.

* * * * *

(h) Pursuant to Section 325(a) of the Clean Air Act (CAA) and a petition submitted by the Governor of United States Virgin Islands on July 21, 2003, (''2003 Petition''), the Administrator of EPA conditionally exempts Virgin Islands Water and Power Authority

(''VIWAPA'') from certain CAA requirements.

(1) A waiver of the requirement to obtain a PSD permit prior to construction is granted for the electric generating unit identified in the 2003 Petition as Unit 23, St. Krum Bay plant in St. Thomas with the following condition:

(i) Unit 23 shall not operate until a final PSD permit is received by VIWAPA for this unit;

(ii) Unit 23 shall not operate until it complies with all requirements of its PSD permit, including, if necessary, retrofitting with BACT;

(iii) If Unit 23 operates either prior to the issuance of a final PSD permit or without BACT equipment, Unit 23 shall be deemed in violation of this waiver and the CAA beginning on the date of commencement of construction of the unit.

(2) [Reserved]

[FR Doc. 03–32207 Filed 12–30–03; 8:45 am]

BILLING CODE 6560–50–P

ENVIRONMENTAL PROTECTION AGENCY

40 CFR Part 69

[Region 2 Docket No. VI 5–265 A; FRL–7605–5]

Special Exemption From Requirements of the Clean Air Act for the Territory of United States Virgin Islands

AGENCY: Environmental Protection Agency.

ACTION: Proposed rule.

SUMMARY: The Environmental Protection Agency (EPA) is proposing to approve a July 21, 2003, petition (petition), from the Governor of the Virgin Islands (US VI), which seeks an exemption of the Clean Air Act (CAA) section 165(a) requirement to obtain a Prevention of Significant Deterioration (PSD) permit to construct prior to commencing construction of a new gas turbine, Unit 23, at the Virgin Islands Water and Power Authority's (VIWAPA's) St. Thomas facility. This exemption will allow for the construction, but not the operation, of Unit 23 prior to issuance of a final PSD permit.

In the same separate part of this **Federal Register**, EPA is also approving the petition as a direct final rule without prior proposal because the Agency views this action as noncontroversial and anticipates no adverse comments. A detailed rationale for the approval is set forth in the direct final rule.

If EPA receives no adverse comments, EPA will not take further action on this proposed rule. If EPA receives adverse comments, EPA will withdraw the direct final rule and it will not take effect. EPA will address all public comments in a subsequent final rule based on this proposed rule. The EPA will not institute a second comment period on this action. Any parties interested in commenting on this action should do so at this time.

DATES: Written comments must be received on or before January 30, 2004.

ADDRESSES: Comments may be submitted either by mail or electronically. Written comments should be mailed to Steven C. Riva, Chief, Permitting Section, Air Programs Branch, Environmental Protection Agency, Region 2 Office, 290 Broadway, New York, New York 10007–1866. Electronic comments could be sent either to *Riva.Steven@epa.gov* or to *http://www.regulations.gov*, which is an alternative method for submitting electronic comments to EPA. Go directly to *http://www.regulations.gov*, then select ''Environmental Protection Agency'' at the top of the page and use the ''go'' button. Please follow the on-line instructions for submitting comments.

Copies of the petition and supporting submittals are available at the following addresses for inspection during normal business hours: Environmental Protection Agency, Region 2 Office, 290 Broadway, 25th Floor, New York, New York 10007–1866, Attn: Umesh Dholakia.

Environmental Protection Agency, Region 2 Office, Caribbean Field Office, Centro Europa Building, Suite 417, 1492 Ponce de Leon Avenue, Stop 22, San Juan, Puerto Rico 00907–4127, Attn: John Aponte.

The U.S. Virgin Islands Department of Planning and Natural Resources (VIDPNR), Division of Environmental Protection, Cyril E. King Airport, Terminal Building, Second Floor, St. Thomas, U.S. Virgin Islands 00802, Attn: Leslie Leonard.

FOR FURTHER INFORMATION CONTACT: Umesh Dholakia, Air Programs Branch, Environmental Protection Agency, Region 2 office, 290 Broadway, 25th Floor, New York, New York 10278, (212) 637–4023 or at *Dholakia.Umesh@epa.gov*.

SUPPLEMENTARY INFORMATION: For additional information see the direct final rule which is located in the same separate part of this **Federal Register**.

Dated: December 23, 2003.

Michael O. Leavitt,

Administrator.

[FR Doc. 03–32206 Filed 12–30–03; 8:45 am]

BILLING CODE 6560–50–P

Federal Register

Wednesday,
December 31, 2003

Part V

The President

Proclamation 7746—To Implement the United States-Chile Free Trade Agreement

Proclamation 7747—To Implement the United States-Singapore Free Trade Agreement

Federal Register
Vol. 68, No. 250
Wednesday, December 31, 2003

Presidential Documents

Title 3—

The President

Proclamation 7746 of December 30, 2003

To Implement the United States-Chile Free Trade Agreement

By the President of the United States of America

A Proclamation

1. On June 6, 2003, the United States entered into the United States-Chile Free Trade Agreement (USCFTA). The Congress approved the USCFTA in section 101(a) of the United States-Chile Free Trade Agreement Implementation Act (the ''USCFTA Act'') (Public Law 108–77, 117 Stat. 909) (19 U.S.C. 3805 note).

2. Section 105 of the USCFTA Act authorizes the President to establish or designate within the Department of Commerce an office that shall be responsible for providing administrative assistance to panels established under Chapter 22 of the USCFTA.

3. Section 201 of the USCFTA authorizes the President to proclaim such modifications or continuation of any duty, such continuation of duty-free or excise treatment, or such additional duties, as the President determines to be necessary or appropriate to carry out or apply articles 3.3 (including the schedule of United States duty reductions with respect to originating goods set forth in Annex 3.3 to the USCFTA), 3.7, 3.9, and 3.20(8), (9), (10), and (11) of the USCFTA.

4. Section 202 of the USCFTA Act provides certain rules for determining whether a good is an originating good for the purpose of implementing tariff treatment under the USCFTA. I have decided that it is necessary to include these rules of origin, together with particular rules applicable to certain other goods, in the Harmonized Tariff Schedule of the United States (HTS).

5. Consistent with section 201(a)(2) of the USCFTA Act, Chile is to be removed from the enumeration of designated beneficiary developing countries eligible for the benefits of the Generalized System of Preferences (GSP). Further, consistent with section 604 of the Trade Act of 1974 (the ''1974 Act'') (19 U.S.C. 2483), as amended, I have determined that other technical and conforming changes to the HTS are necessary to reflect that Chile is no longer eligible to receive benefits of the GSP.

6. Section 208 of the USCFTA Act authorizes the President to direct the Secretary of the Treasury to take certain actions related to verifications conducted consistent with Article 3.21 of the USCFTA.

7. Subtitle B of title III of the USCFTA Act authorizes the President to take certain actions in response to a request by an interested party for relief from imports that are a cause of serious damage, or actual threat thereof, to a domestic industry producing certain textile or apparel articles.

8. Executive Order 11651 of March 3, 1972, as amended, establishes the Committee for the Implementation of Textile Agreements (CITA) to supervise the implementation of textile trade agreements.

9. Section 604 of the 1974 Act, as amended, authorizes the President to embody in the HTS the substance of relevant provisions of that Act, or other acts affecting import treatment, and of actions taken thereunder, including the removal, modification, continuance, or imposition of any rate of duty or other import restriction.

NOW, THEREFORE, I, GEORGE W. BUSH, President of the United States of America, acting under the authority vested in me by the Constitution and the laws of the United States of America, including but not limited to sections 105, 201, 202, and 208 of the USCFTA Act, section 604 of the 1974 Act, and section 301 of title 3, United States Code, do proclaim that:

(1) In order to provide generally for the preferential tariff treatment being accorded under the USCFTA, to set forth rules for determining whether goods imported into the customs territory of the United States are eligible for preferential tariff treatment under the USCFTA, to provide certain other treatment to originating goods for the purposes of the USCFTA, to provide tariff-rate quotas with respect to certain originating goods, to reflect Chile's removal from the enumeration of designated beneficiary developing countries for purposes of the GSP, and to make technical and conforming changes in the general notes to the HTS, the HTS is modified as set forth in Annex I of Publication 3652 of the United States International Trade Commission, entitled *Modifications of the Harmonized Tariff Schedule of the United States Implementing the United States- Chile Free Trade Agreement* (Publication 3652), which is incorporated by reference into this proclamation.

(2) In order to implement the initial stage of duty elimination provided for in the USCFTA, and to provide for future staged reductions in duties for products of Chile for purposes of the USCFTA, the HTS is modified as provided in Annex II of Publication 3652, effective on the dates specified in the relevant sections of such publication and on any subsequent dates set forth for such duty reductions in that publication.

(3) The Secretary of Commerce is authorized to exercise the authority of the President under section 105(a) of the USCFTA Act to establish or designate an office within the Department of Commerce to carry out the functions set forth in that section.

(4) The CITA is authorized to exercise the authority of the President under section 208 of the USCFTA Act with respect to verifications conducted in a manner consistent with article 3.21 of the USCFTA.

(5) The CITA is authorized to exercise the authority of the President under subtitle B of title III of the USCFTA Act to review requests and to determine whether to commence consideration of such requests; to cause to be published in the **Federal Register** a notice of commencement of consideration of a request and notice seeking public comment; to determine whether a Chilean textile or apparel article is being imported into the United States in such increased quantities and under such conditions as to cause serious damage, or actual threat thereof, to a domestic industry producing an article that is like, or directly competitive with, the imported article; and to provide relief from imports of an article that is the subject of such a determination.

(6)(a) The amendments to the HTS made by paragraph (2) of this proclamation shall be effective with respect to goods entered, or withdrawn from warehouse for consumption, on or after the relevant dates indicated in Annex II to Publication 3652.

(b) Except as provided in paragraph (6)(a) of this proclamation, this proclamation shall be effective with respect to goods entered, or withdrawn from warehouse for consumption, on or after January 1, 2004.

(7) All provisions of previous proclamations and Executive Orders that are inconsistent with the actions taken in this proclamation are superseded to the extent of such inconsistency.

IN WITNESS WHEREOF, I have hereunto set my hand this thirtieth day of December, in the year of our Lord two thousand three, and of the Independence of the United States of America the two hundred and twenty-eighth.

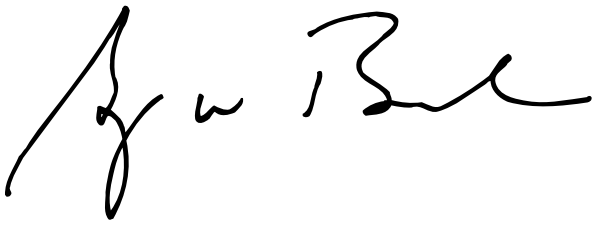

[FR Doc. 03–32319
Filed 12–30–03; 11:33 am]
Billing code 3195–01–P

Presidential Documents

Proclamation 7747 of December 30, 2003

To Implement the United States-Singapore Free Trade Agreement

By the President of the United States of America

A Proclamation

1. On May 6, 2003, the President entered into the United States-Singapore Free Trade Agreement (USSFTA). The USSFTA was approved by the Congress in section 101(a) of the United States-Singapore Free Trade Agreement Implementation Act (the ''USSFTA Act'') (Public Law 108–78, 117 Stat. 948) (19 U.S.C. 3805 note).

2. Section 105 of the USSFTA Act authorizes the President to establish or designate within the Department of Commerce an office that shall be responsible for providing administrative assistance to panels established under Chapter 20 of the USSFTA.

3. Section 201 of the USSFTA Act authorizes the President to proclaim such modifications or continuation of any duty, such continuation of duty-free or excise treatment, or such additional duties, as the President determines to be necessary or appropriate to carry out or apply articles 2.2, 2.5, 2.6, and 2.12 of the USSFTA and the schedule of reductions with respect to the Republic of Singapore (Singapore) set forth in Annex 2B of the USSFTA.

4. Section 202 of the USSFTA Act provides certain rules for determining whether a good is an originating good for the purposes of implementing tariff treatment under the USSFTA. I have decided that it is necessary to include these rules of origin, together with particular rules applicable to certain other goods, in the Harmonized Tariff Schedule of the United States (HTS).

5. Section 205 of the USSFTA Act authorizes the President to take certain enforcement actions relating to trade with Singapore in textile and apparel goods.

6. Subtitle B of title III of the USSFTA Act authorizes the President to take certain actions in response to a request by an interested party for relief from imports that constitute a substantial cause of serious damage, or actual threat thereof, to a domestic industry producing certain textile or apparel articles.

7. Executive Order 11651 of March 3, 1972, as amended, establishes the Committee for the Implementation of Textile Agreements (CITA) to supervise the implementation of textile trade agreements.

8. Section 604 of the Trade Act of 1974 (the ''1974 Act'') (19 U.S.C. 2483), as amended, authorizes the President to embody in the HTS the substance of relevant provisions of that Act, or other acts affecting import treatment, and of actions taken thereunder, including the removal, modification, continuance, or imposition of any rate of duty or other import restriction.

NOW, THEREFORE, I, GEORGE W. BUSH, President of the United States of America, acting under the authority vested in me by the Constitution and the laws of the United States of America, including but not limited to sections 105, 201, 202, 205, and 321–328 of the USSFTA Act, section 301 of title 3, United Code, and section 604 of the 1974 Act, do proclaim that:

(1) In order to provide generally for the preferential tariff treatment being accorded under the USSFTA, to set forth rules for determining whether goods imported into the customs territory of the United States are eligible for preferential tariff treatment under the USSFTA, to provide certain other treatment to originating goods for the purposes of the USSFTA, and to provide tariff-rate quotas with respect to certain originating goods, the HTS is modified as set forth in Annex I of Publication 3651 of the United States International Trade Commission, entitled *Modifications to the Harmonized Tariff Schedule of the United States Implementing the United States-Singapore Free Trade Agreement* (Publication 3651), which is incorporated by reference into this proclamation.

(2) In order to implement the initial stage of duty elimination provided for in the USSFTA and to provide for future staged reductions in duties for products of Singapore for purposes of the USSFTA, the HTS is modified as provided in Annex II of Publication 3651, effective on the dates specified in the relevant sections of such publication and on any subsequent dates set forth for such duty reductions in that publication.

(3) The Secretary of Commerce is authorized to exercise the authority of the President under section 105(a) of the USSFTA Act to establish or designate an office within the Department of Commerce to carry out the functions set forth in that section.

(4) (a) The amendments to the HTS made by paragraphs (1) and (2) of this proclamation shall be effective with respect to goods entered, or withdrawn from warehouse for consumption, on or after the relevant dates indicated in Annex II to Publication 3651.

(b) Except as provided in paragraph (4)(a) of this proclamation, this proclamation shall be effective with respect to goods entered, or withdrawn from warehouse for consumption, on or after January 1, 2004.

(5) The CITA is authorized to exercise the authority of the President under section 205 of the USSFTA Act to exclude textile and apparel goods from the customs territory of the United States; to determine whether an enterprise's production of, and capability to produce, textile and apparel goods are consistent with statements by the enterprise; to find that an enterprise has knowingly or willfully engaged in circumvention; and to deny preferential tariff treatment to textile and apparel goods.

(6) The CITA is authorized to exercise the authority of the President under subtitle B of title III of the USSFTA Act to review requests and to determine whether to commence consideration of such requests; to cause to be published in the **Federal Register** a notice of commencement of consideration of a request and notice seeking public comment; to determine whether imports of a Singaporean textile or apparel article constitute a substantial cause of serious damage, or actual threat thereof, to a domestic industry producing an article that is like, or directly competitive with, the imported article; and to provide relief from imports of an article that is the subject of such a determination.

(7) All provisions of previous proclamations and Executive Orders that are inconsistent with the actions taken in this proclamation are superseded to the extent of such inconsistency.

IN WITNESS WHEREOF, I have hereunto set my hand this thirtieth day of December, in the year of our Lord two thousand three, and of the Independence of the United States of America the two hundred and twenty-eighth.

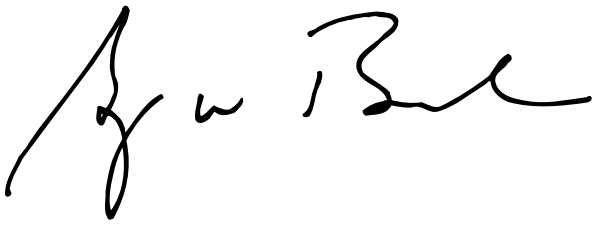

[FR Doc. 03–32320
Filed 12–30–03; 11:33 am]
Billing code 3195–01–P

Reader Aids

Federal Register

Vol. 68, No. 250

Wednesday, December 31, 2003

CUSTOMER SERVICE AND INFORMATION

Federal Register/Code of Federal Regulations	
General Information, indexes and other finding aids	**202–741–6000**
Laws	**741–6000**
Presidential Documents	
Executive orders and proclamations	**741–6000**
The United States Government Manual	**741–6000**
Other Services	
Electronic and on-line services (voice)	**741–6020**
Privacy Act Compilation	**741–6064**
Public Laws Update Service (numbers, dates, etc.)	**741–6043**
TTY for the deaf-and-hard-of-hearing	**741–6086**

ELECTRONIC RESEARCH

World Wide Web

Full text of the daily Federal Register, CFR and other publications is located at: **http://www.access.gpo.gov/nara**

Federal Register information and research tools, including Public Inspection List, indexes, and links to GPO Access are located at: **http://www.archives.gov/federal__register/**

E-mail

FEDREGTOC-L (Federal Register Table of Contents LISTSERV) is an open e-mail service that provides subscribers with a digital form of the Federal Register Table of Contents. The digital form of the Federal Register Table of Contents includes HTML and PDF links to the full text of each document.

To join or leave, go to **http://listserv.access.gpo.gov** and select *Online mailing list archives, FEDREGTOC-L, Join or leave the list (orchange settings);* then follow the instructions.

PENS (Public Law Electronic Notification Service) is an e-mail service that notifies subscribers of recently enacted laws.

To subscribe, go to **http://listserv.gsa.gov/archives/publaws-l.html** and select *Join or leave the list* (or change settings); then follow the instructions.

FEDREGTOC-L and **PENS** are mailing lists only. We cannot respond to specific inquiries.

Reference questions. Send questions and comments about the Federal Register system to: **info@fedreg.nara.gov**

The Federal Register staff cannot interpret specific documents or regulations.

FEDERAL REGISTER PAGES AND DATE, DECEMBER

67013–67356 1
67357–67584 2
67585–67786 3
67787–67936 4
67937–68232 5
68233–68486 8
68487–68716 9
68717–69000 10
69001–69294 11
69295–69582 12
69583–69940 15
69941–70120 16
70121–70420 17
70421–70688 18
70689–70994 19
70995–72396 22
74161–74466 23
74467–74828 24
74829–75106 29
75107–75384 30
75385–75796 31

CFR PARTS AFFECTED DURING DECEMBER

At the end of each month, the Office of the Federal Register publishes separately a List of CFR Sections Affected (LSA), which lists parts and sections affected by documents published since the revision date of each title.

1 CFR

Proposed Rules:
11 70191

3 CFR

Proclamations:
7529 (See Proc. 7741) 68483
7576 (See Proc. 7741) 68483
7463 (See EO 13321) 74465
7740 67787
7741 68483
7742 68999
7743 69293
7744 69939
7745 74463
7746 75789
7747 75793

Executive Orders:
11582 (See EO 13320) 69295
11651 (See Procs. 7746, 7747) 75789, 75793
13119 68233
13183 (Amended by EO 13319) 68233
13320 69295
13321 (See Proc. 7763) 74465

Administrative Orders:
Memorandums:
Memorandum of March 5, 2002 (See Proc. 7741) 68483
No. 2004–10 of December 6, 2003 74455
No. 2004–11 of December 8, 2003 74457
No. 2004–12 of December 9, 2003 74459
No. 2004–13 of December 11, 2003 74461
Presidential Determinations:
No. 2004-15 of December 16, 2003 75385

4 CFR

27 69297
28 69297
29 69297

5 CFR

919 74461
970 74461
1600 74450
1601 74450
1603 74450
1604 74450
1605 74450
1606 74450
1640 74450
1645 74450
1650 74450
1651 74450
1653 74450
1655 74450
1690 74450

Proposed Rules:
890 74513

7 CFR

51 69941
56 68487
70 68487
91 69944
96 69944
319 70421
354 67937
772 69948
905 68717
966 70689
1220 69953
1412 67938
1421 67938
1901 69948
1942 69001
1951 ..... 69948, 69954
2200 74412
2201 74412
3200 75107

Proposed Rules:
60 71039
275 70193
319 70448
810 70201
900 ..... 67381, 75148
929 69343
930 75148
983 75320
1124 74874
1131 74874
1230 70201
1720 75153
2902 70730

8 CFR

264 67578

Proposed Rules:
1001 75160
1292 75160

9 CFR

201 75387
203 75387

Proposed Rules:
55 74513
81 74513

10 CFR

1 75388

4 75388
19 75388
35 75388
39 75388
40 75388
50 75388
72 ....70121, 70423
Proposed Rules:
35 68549
50 67811
72 70463
300 68204
850 68276
851 68276

11 CFR

4 70426
100 ....67013, 69583
102 67013
106 69583
111 70426
114 69583
9004 69583
9034 69583

12 CFR

3 ....70122, 74467
5 ....70122, 70691
6 70122
7 70122
9 70122
11 68489
16 68489
22 74467
28 ....70122, 70691
34 70122
203 74829
225 68493
264b 68720
506 75108
550 75108
560 75108
563 75108
563g 75108
575 75108
701 75110
745 75111
905 67789
Proposed Rules:
40 75164
202 68786
205 68788
213 68791
216 75164
222 74529
226 68793
230 68799
332 75164
573 75164
716 75164

13 CFR

121 ....74833, 74842

14 CFR

11 70132
23 75390
25 ....68499, 68501, 70133
33 ....74469, 75390
39 ....67018, 67020, 67021, 67024, 67025, 67027, 67585, 67588, 67789, 67792, 67794, 67796, 67798, 69596, 70136, 70428, 70429, 70431, 70432, 70434, 74161, 74163, 74164, 74166, 74167, 74169, 74171, 74172, 74173, 74175, 75114, 75115, 75391, 75394, 75396, 75397, 75400, 75403
71 ....67357, 67358, 67359, 67360, 67361, 67590, 68449, 68503, 68504, 68505, 68506, 68507, 68508, 68973, 69305, 69597, 69598, 69599, 70137, 70138, 70139, 70140, 74471, 74472, 74473, 74474, 74475, 74476, 75406
91 70132
97 ....67363, 69306, 75406
121 ....75116, 75455
125 75116
135 ....69307, 75116
145 ....75116, 75380
1260 67364
Proposed Rules:
25 68563
39 ....67385, 67611, 67613, 67616, 67618, 67622, 67812, 67814, 67816, 67971, 67973, 67975, 67978, 67980, 67981, 67984, 67986, 67988, 68299, 68301, 68304, 68306, 68308, 68311, 68802, 69051, 69053, 69055, 69057, 69633, 70204, 70206, 70208, 70210, 70213, 70464, 70469, 70473, 70475, 70477, 70479, 71040, 71045, 71047, 71049, 71051, 74532, 74874, 75174, 75468, 75496, 75471
71 ....68573, 68575, 68576, 70746, 71053, 75473

15 CFR

6 69001
740 68976
742 67030
743 68976
772 68976
774 ....67030, 68976
801 ....69955, 75408, 75410
806 67939

16 CFR

602 74467
1500 70140
Proposed Rules:
313 75164
602 74529
1500 74878

17 CFR

211 ....74436, 75056
228 69204
229 69204
231 75056
240 ....69204, 74390, 75050
241 75056
249 69204
270 ....69204, 74714
274 69204
275 74714
279 74714
Proposed Rules:
143 69634
160 75164
200 68186
201 68186
239 ....70402, 74732
240 68186
248 75164
270 ....70388, 74820
274 ....70402, 74732
403 69059

18 CFR

4 69957
5 69978
11 67592
35 69599
37 69134
161 69134
250 69134
284 69134
358 69134

19 CFR

4 68140
10 67338
103 68140
113 68140
122 68140
123 68140
163 67338
178 68140
192 68140

20 CFR

404 ....69003, 74177
416 ....69003, 74177
422 74177
718 69930
725 69930
Proposed Rules:
422 69978

21 CFR

1 69957
172 75411
314 69009
347 68509
358 75414
520 68723
522 ....68723, 70701
600 75116
601 69009
872 67365
882 70435
Proposed Rules:
17 67094
600 75179
872 67097

22 CFR

89 69600
126 67032
303 68695
Proposed Rules:
302 71054

24 CFR

570 69580
891 67316

25 CFR

170 67941

26 CFR

1 ....67595, 68511, 69020, 69024, 70141, 70584, 70701, 74847, 75119, 75126, 75128
301 ....67595, 70701, 74848, 75128
602 ....67595, 70141, 70701
Proposed Rules:
1 ....69061, 69062, 70214, 70482, 70747, 71235, 75182
20 74534
301 ....70214, 70747, 74534

27 CFR

9 67367
Proposed Rules:
7 67388
9 70217
25 67388

28 CFR

2 70709
15 74187
28 74855
548 74859
Proposed Rules:
90 75184
549 74892
901 67991

29 CFR

1626 70150
1910 75776
4011 67032
4022 ....67033, 69606
4044 ....67035, 69606
Proposed Rules:
1910 ....75475, 75768
1917 68804
1918 68804
2510 68710

30 CFR

250 69308
914 75418
917 75423
934 67801
948 ....67035, 68724
Proposed Rules:
701 75036
732 67776
773 75036
774 75036
778 75036
843 75036
847 75036
917 75476
931 70749

31 CFR

1 67943
323 67943
Proposed Rules:
10 75186
50 67100
356 74274

32 CFR

341 74860
342 74860
348 74860
350 74860
353 74860
363 74860
364 74860
365 74860
366 74860
367A 74860
368 74860
369 74860
370 74860
373 74860
376 74860
377 74860
380 74860

381 74860
382 74860
384 74860
385 74860
386 74860
387 74860
391 74860
394 74860
396 74860
399 74860
706 ....68511, 68513, 68514, 68515, 68516
806b 68517

Proposed Rules:
312 68577
806b 68578

33 CFR

1 69958
27 74189
66 68235
100 ....67944, 68239
110 70995
117 ....69607, 70152, 70712, 74477
165 ....67371, 67946, 68518, 69609, 69958, 70153, 74479, 74861, 74863, 75131, 75134, 75425

Proposed Rules:
110 74536
167 74199

34 CFR

200 68698
668 69312
674 ....69312, 75427
682 ....69312, 75427
685 ....69312, 75427

36 CFR

7 69268
242 ....67595, 70712
294 75136

Proposed Rules:
7 69358

37 CFR

1 ....67805, 70996
2 74479
7 74479
253 67045
259 74481

Proposed Rules:
1 ....67818, 69442
2 ....69442, 70482
10 69442
11 69442

38 CFR

17 70714

Proposed Rules:
1 74893
2 74893
19 69062
20 69062

39 CFR

Proposed Rules:
111 69066

40 CFR

51 71009
52 ....67045, 67598, 67805, 67807, 67948, 68521, 68523, 69025, 69318, 69320, 69611, 70437, 74483, 74866
60 ....69029, 69036, 70960
61 ....67932, 69029, 69036
62 ....68738, 74868
63 ....67953, 69029, 69036, 69164, 70726, 70904, 70948, 70960, 75033
69 75782
70 74871
81 69611
180 ....69322, 75430, 75438
271 68526
437 71014
721 70155

Proposed Rules:
30 74537
31 74537
33 74537
35 74537
40 74537
51 68805
52 ....67821, 67993, 68579, 68580, 68581, 69069, 69366, 69637, 69640, 70484, 75191
61 69069
62 68805
63 ....69069, 70752
69 75786
70 74907
81 ....69640, 70108, 75033
180 68806
247 68813
260 74907
261 74907
271 68585
302 67916
355 67916
451 75068

41 CFR

105–55 68740
105–56 68750
105–57 68760
300–3 71026
301–10 69618
301–50 71026
301–52 71026
301–70 71026
301–73 71026

42 CFR

52a 69619
102 70080
403 69840
405 74792
408 69840
410 75442
411 74491
412 67955
413 67955
414 67960
419 75442
476 67955
484 67955
491 74792

Proposed Rules:
1001 69366

43 CFR

4 68765
3710 74196
3730 74196
3810 74196
3820 74196
3830 74196
3831 74196
3832 74196
3833 74196
3834 74196
3835 74196
3836 74196
3837 74196
3838 74196
3839 74196
3840 74196
3850 74196

Proposed Rules:
4100 68452

44 CFR

62 75453
64 67051
65 ....67052, 69323, 69959
67 ....67056, 69961

Proposed Rules:
67 ....67106, 67107

45 CFR

31 70444
1185 70184
1604 67372

Proposed Rules:
2400 69980

46 CFR

401 69564
404 69564

Proposed Rules:
501 67510
535 67510

47 CFR

2 ....68241, 68531, 74322
15 68531
18 68531
20 70184
25 ....74322, 75146
32 75455
54 ....69622, 74492
64 74504
73 ....67378, 67599, 67964, 68254, 68547, 69327, 69328, 69627, 70728, 70729, 74201, 74197
74 ....68241, 69328
76 67599
78 68241
87 74322
90 68531
95 68531
101 68241

Proposed Rules:
2 68823
15 68823
32 75478
52 68831
53 68585
54 ....69641, 74538
64 68312
73 ....67389, 67390, 67624, 68833, 69648, 70753, 74201, 74202, 74542
76 67624

48 CFR

Ch. 1 ....69226, 69259
Ch. 30 67868
1 ....69227, 69258
2 ....67354, 69246
4 69248
6 69258
8 69249
9 ....67354, 69250
13 69258
22 67354
25 69258
28 67354
31 ....69246, 69251
36 69227
44 67354
52 ....67354, 69251, 69257, 69258
53 ....69227, 69248
202 75196
204 75196
211 75196
212 75196
232 ....69628, 69631
243 75196
252 ....69628, 69631, 75196
904 68771
923 68771
952 68771
970 68771

Proposed Rules:
8 69262
22 74404
31 69264
52 74404
53 74404
1809 67995
1813 71055
1814 71055
1815 71055
1816 71055
1817 71055
1819 71056
1822 71056
1823 71056
1824 71056
1825 71056
1837 67995
1852 67995

49 CFR

171 ....67746, 75734
172 75734
173 75734
174 75734
175 75734
176 75734
177 75734
178 75734
179 75734
180 75734
192 69778
199 ....69046, 75455
219 75455
222 70586
229 70586
382 75455
571 ....67068, 69046
586 67068
655 75455
1152 67809

Proposed Rules:
24 70342
171 67821
173 67821
174 67821
176 67821
177 67821
192 ....67128, 67129, 69368
195 ....67129, 69368
390 75478
396 75478

533.....74908, 74931
571.....68319, 71057

50 CFR

17.....70185
100.....67595, 70712
223.....69962
229.....69967
300.....67607
402.....68254
600.....69331, 74746
622.....68784
635 .....69969, 74504, 74746, 75466
648 .....67609, 69970, 71032, 71033, 74198, 74512
679 .....67086, 67379, 67964, 68265, 69047, 69048, 69049, 69974, 70753, 71036, 75147

Proposed Rules:

216.....67629
222.....70219
223.....68834, 70219
224.....68834
600 .....67636, 69070, 74542
622 .....68854, 71058, 75202
648.....69373, 74939
660 .....67132, 67638, 67640, 67998, 68834
679 .....67390, 67642, 68002, 70484, 70753
697.....67636

REMINDERS

The items in this list were editorially compiled as an aid to Federal Register users. Inclusion or exclusion from this list has no legal significance.

RULES GOING INTO EFFECT DECEMBER 31, 2003

AGRICULTURE DEPARTMENT

Grain Inspection, Packers and Stockyards Administration

Practice and procedure:

Update of budget control numbers; technical amendments; published 12-31-03

ENVIRONMENTAL PROTECTION AGENCY

Pesticides; tolerances in food, animal feeds, and raw agricultural commodities:

Cyprodinil; published 12-31-03

Pesticides; tolerances in food, animal feeds, and raw agricultural commodities:

Fluroxypyr; published 12-31-03

FEDERAL ELECTION COMMISSION

Contribution and expenditure limitations and prohibitions:

Leadership PACs; published 12-1-03

FEDERAL RESERVE SYSTEM

Fair and Accurate Credit Transactions Act; implementation:

Fair credit reporting provisions (Regulation V); published 12-24-03

FEDERAL TRADE COMMISSION

Fair and Accurate Credit Transactions Act; implementation:

Fair credit reporting provisions; published 12-24-03

HOUSING AND URBAN DEVELOPMENT DEPARTMENT

Low income housing:

Supportive housing for elderly or persons with disabilities; mixed-finance development; published 12-1-03

INTERIOR DEPARTMENT

Surface Mining Reclamation and Enforcement Office

Permanent program and abandoned mine land reclamation plan submissions:

Indiana; published 12-31-03

Kentucky; published 12-31-03

LABOR DEPARTMENT

Occupational Safety and Health Administration

Safety and health standards, etc.:

Respiratory protection; withdrawn; published 12-31-03

NUCLEAR REGULATORY COMMISSION

Technical amendments; published 12-31-03

TRANSPORTATION DEPARTMENT

Federal Aviation Administration

Airworthiness directives:

Bombardier; published 11-26-03

Airworthiness standards:

Aircraft engines—

General Electric Model CT7-8A, -8A5, -8B, -8B5, -8E, -8E5, -8F, and -8F5 engines; published 12-24-03

Standard instrument approach procedures; published 12-31-03

Workplace drug and alcohol testing programs:

Drug and alcohol management information system reporting forms; published 12-31-03

TRANSPORTATION DEPARTMENT

Federal Motor Carrier Safety Administration

Workplace drug and alcohol testing programs:

Drug and alcohol management information system reporting forms; published 12-31-03

TRANSPORTATION DEPARTMENT

Federal Railroad Administration

Workplace drug and alcohol testing programs:

Drug and alcohol management information system reporting forms; published 12-31-03

TRANSPORTATION DEPARTMENT

Federal Transit Administration

Workplace drug and alcohol testing programs:

Drug and alcohol management information system reporting forms; published 12-31-03

TRANSPORTATION DEPARTMENT

Research and Special Programs Administration

Workplace drug and alcohol testing programs:

Drug and alcohol management information system reporting forms; published 12-31-03

COMMENTS DUE NEXT WEEK

AGRICULTURE DEPARTMENT

Animal and Plant Health Inspection Service

Exportation and importation of animals and animal products:

Bovine spongiform encephalopathy; minimal risk regions and importation of commodities; comments due by 1-5-04; published 11-4-03 [FR 03-27611]

COMMERCE DEPARTMENT

National Oceanic and Atmospheric Administration

Fishery conservation and management:

Alaska; fisheries of Exclusive Economic Zone—

Bering Sea and Aleutian Islands king and tanner crab and Gulf of Alaska scallop and salmon; comments due by 1-10-04; published 11-21-03 [FR 03-29173]

Gulf of Alaska groundfish; comments due by 1-5-04; published 12-5-03 [FR 03-30283]

Caribbean, Gulf, and South Atlantic fisheries—

Gulf of Mexico Fishery Management Council; meetings; comments due by 1-9-04; published 12-22-03 [FR 03-31488]

Snapper-Grouper; comments due by 1-5-04; published 11-4-03 [FR 03-27686]

Snapper-Grouper; comments due by 1-9-04; published 11-25-03 [FR 03-29444]

Magnuson-Stevens Act provisions—

Domestic fisheries; exempted fishing permit applications; comments due by 1-8-04; published 12-24-03 [FR 03-31612]

West Coast and Western Pacific fisheries—

Highy migratory species; comments due by 1-5-04; published 11-6-03 [FR 03-27994]

West Coast States and Western Pacific fisheries—

Pacific Coast groundfish; comments due by 1-5-04; published 12-5-03 [FR 03-30284]

Pacific Coast groundfish; comments due by 1-6-04; published 11-7-03 [FR 03-28131]

COMMERCE DEPARTMENT

Patent and Trademark Office

Patent cases:

Patent term extension and patent term adjustment provisions related to Board of Patent Appeals and Interferences decisions; revision; comments due by 1-5-04; published 12-4-03 [FR 03-30151]

COURT SERVICES AND OFFENDER SUPERVISION AGENCY FOR THE DISTRICT OF COLUMBIA

Semi-annual agenda; Open for comments until further notice; published 12-22-03 [FR 03-25121]

ENERGY DEPARTMENT

Federal Energy Regulatory Commission

Electric rate and corporate regulation filings:

Virginia Electric & Power Co. et al.; Open for comments until further notice; published 10-1-03 [FR 03-24818]

ENVIRONMENTAL PROTECTION AGENCY

Air programs; approval and promulgation; State plans for designated facilities and pollutants:

Nevada; comments due by 1-9-04; published 12-10-03 [FR 03-30590]

Air quality implementation plans; approval and promulgation; various States:

California; comments due by 1-5-04; published 12-4-03 [FR 03-30167]

Delaware; comments due by 1-5-04; published 12-5-03 [FR 03-30041]

Maryland; comments due by 1-8-04; published 12-9-03 [FR 03-30509]

Missouri; comments due by 1-8-04; published 12-9-03 [FR 03-30039]

New Jersey; comments due by 1-8-04; published 12-9-03 [FR 03-30514]

Environmental statements; availability, etc.:

Coastal nonpoint pollution control program—

Minnesota and Texas; Open for comments until further notice; published 10-16-03 [FR 03-26087]

Hazardous waste program authorizations:

Louisiana; comments due by 1-8-04; published 12-9-03 [FR 03-30511]

Water pollution control:

Clean Water Act—

Arizona; Sewage Sludge (Biosolids) Management Program; modification application; comments due by 1-5-04; published 11-21-03 [FR 03-29177]

National Pollutant Discharge Elimination System—

Municipal wastewater treatment discharges during wet weather conditions; permit requirements; comments due by 1-9-04; published 11-7-03 [FR 03-28103]

Water supply:

National primary drinking water regulations—

Long Term 2 Enhanced Surface Water Treatment Rule; comments due by 1-9-04; published 10-8-03 [FR 03-25546]

FEDERAL COMMUNICATIONS COMMISSION

Common carrier services:

Update default compensation rate for dial-around calls from payphones; comments due by 1-7-04; published 12-8-03 [FR 03-30309]

Digital television stations; table of assignments:

Idaho; comments due by 1-5-04; published 11-28-03 [FR 03-29626]

North Dakota; comments due by 1-5-04; published 11-26-03 [FR 03-29467]

Radio frequency devices:

Unlicensed devices and equipment approval; comments due by 1-9-04; published 12-10-03 [FR 03-30540]

Radio stations; table of assignments:

Pennsylvania; comments due by 1-5-04; published 12-2-03 [FR 03-29860]

Various States; comments due by 1-5-04; published 11-28-03 [FR 03-29628]

HEALTH AND HUMAN SERVICES DEPARTMENT

Centers for Medicare & Medicaid Services

Medicare:

Hospital outpatient prospective payment system and 2004 CY payment rates; comments due by 1-6-04; published 11-7-03 [FR 03-27791]

HEALTH AND HUMAN SERVICES DEPARTMENT

Food and Drug Administration

Reports and guidance documents; availability, etc.:

Evaluating safety of antimicrobial new animal drugs with regard to their microbiological effects on bacteria of human health concern; Open for comments until further notice; published 10-27-03 [FR 03-27113]

HOMELAND SECURITY DEPARTMENT

Coast Guard

Ports and waterways safety:

Ninth Coast Guard District; Illinois Waterway System; barges loaded with dangerous cargoes; reporting requirements; comments due by 1-5-04; published 10-6-03 [FR 03-25296]

HOMELAND SECURITY DEPARTMENT

Acquisition regulations:

Establishment; comments due by 1-5-04; published 12-4-03 [FR 03-29823]

INTERIOR DEPARTMENT

Fish and Wildlife Service

Endangered and threatened species:

Finding on petitions, etc.—

Tibetan Antelope; comments due by 1-5-04; published 10-6-03 [FR 03-25207]

JUSTICE DEPARTMENT

Protection of Children from Sexual Predators Act of 1998; implementation:

Designation of agencies to receive and investigate reports of child pornography; comments due by 1-5-04; published 11-4-03 [FR 03-27467]

NATIONAL CRIME PREVENTION AND PRIVACY COMPACT COUNCIL

Fingerprint submission requirements; comments due by 1-5-04; published 12-5-03 [FR 03-29567]

RAILROAD RETIREMENT BOARD

Railroad Unemployment Insurance Act:

Applications and claims for benefits; electronic filing; comments due by 1-6-04; published 11-7-03 [FR 03-28031]

SECURITIES AND EXCHANGE COMMISSION

Investment companies:

Subadvisory contracts; exemption from shareholder approval; comments due by 1-8-04; published 10-29-03 [FR 03-27198]

Practice and procedure:

Sarbanes-Oxley Act of 2002; implementation—

Rules of practice and related provisions; amendments; comments due by 1-5-04; published 12-5-03 [FR 03-29932]

Securities:

Short sales; comments due by 1-5-04; published 11-6-03 [FR 03-27660]

SOCIAL SECURITY ADMINISTRATION

Special veterans benefits; World War II veterans; comments due by 1-5-04; published 11-5-03 [FR 03-27434]

TRANSPORTATION DEPARTMENT

Federal Aviation Administration

Airworthiness directives:

Airbus; comments due by 1-5-04; published 12-4-03 [FR 03-30191]

BAE Systems (Operations) Ltd.; comments due by 1-5-04; published 12-5-03 [FR 03-30222]

Boeing; comments due by 1-9-04; published 11-25-03 [FR 03-29342]

Bombardier; comments due by 1-5-04; published 12-5-03 [FR 03-30221]

Dassault; comments due by 1-5-04; published 12-4-03 [FR 03-30190]

Dornier; comments due by 1-5-04; published 12-5-03 [FR 03-30225]

Fokker; comments due by 1-5-04; published 12-5-03 [FR 03-30224]

Pilatus Aircraft Ltd.; comments due by 1-6-04; published 12-5-03 [FR 03-30256]

Raytheon; comments due by 1-6-04; published 11-5-03 [FR 03-27798]

Special conditions—

Boeing Model 707-300 series airplanes; comments due by 1-8-04; published 12-9-03 [FR 03-30448]

Israel Aircraft Industries Model 1124 airplanes; comments due by 1-8-04; published 12-9-03 [FR 03-30447]

Class D and E airspace; comments due by 1-8-04; published 12-9-03 [FR 03-30457]

Class E airspace; comments due by 1-5-04; published 11-19-03 [FR 03-28824]

TRANSPORTATION DEPARTMENT

Federal Motor Carrier Safety Administration

Motor carrier safety standards:

Commercial driver's licenses with hazardous materials endorsement; limitations on issuance; comments due by 1-6-04; published 11-7-03 [FR 03-28175]

TRANSPORTATION DEPARTMENT

National Highway Traffic Safety Administration

Motor vehicle safety standards:

Hydraulic and electric brake systems; comments due by 1-5-04; published 11-4-03 [FR 03-27657]

TREASURY DEPARTMENT

Internal Revenue Service

Incomes taxes:

Mortgage revenue bonds; public hearing; comments due by 1-7-04; published 11-5-03 [FR 03-27866]

TREASURY DEPARTMENT

Alcohol and Tobacco Tax and Trade Bureau

Alcohol; viticultural area designations:

Eola Hills, OR; comments due by 1-6-04; published 11-7-03 [FR 03-28062]

LIST OF PUBLIC LAWS

Note: The List of Public Laws for the first session of the 108th Congress has been completed. It will resume when bills are enacted into public law during the next session of Congress. A cumulative List of Public Laws for the first session of the 108th Congress will appear in the issue of January 30, 2004.

Last List December 24, 2003

Public Laws Electronic Notification Service (PENS)

PENS is a free electronic mail notification service of newly enacted public laws. To subscribe, go to *http://listserv.gsa.gov/archives/publaws-l.html*

Note: PENS will resume service when bills are enacted into law during the next session of Congress. This service is strictly for E-mail notification of new laws. The text of laws is not available through this service. **PENS** cannot respond to specific inquiries sent to this address.