AUTHENTICATED
U.S. GOVERNMENT
INFORMATION
GPO

Federal Register

5–17–04 Monday
Vol. 69 No. 95 May 17, 2004

Pages 27817–28040

The **FEDERAL REGISTER** (ISSN 0097–6326) is published daily, Monday through Friday, except official holidays, by the Office of the Federal Register, National Archives and Records Administration, Washington, DC 20408, under the Federal Register Act (44 U.S.C. Ch. 15) and the regulations of the Administrative Committee of the Federal Register (1 CFR Ch. I). The Superintendent of Documents, U.S. Government Printing Office, Washington, DC 20402 is the exclusive distributor of the official edition. Periodicals postage is paid at Washington, DC.

The **FEDERAL REGISTER** provides a uniform system for making available to the public regulations and legal notices issued by Federal agencies. These include Presidential proclamations and Executive Orders, Federal agency documents having general applicability and legal effect, documents required to be published by act of Congress, and other Federal agency documents of public interest.

Documents are on file for public inspection in the Office of the Federal Register the day before they are published, unless the issuing agency requests earlier filing. For a list of documents currently on file for public inspection, *www.archives.gov.*

The seal of the National Archives and Records Administration authenticates the Federal Register as the official serial publication established under the Federal Register Act. Under 44 U.S.C. 1507, the contents of the **Federal Register** shall be judicially noticed.

The **Federal Register** is published in paper and on 24x microfiche. It is also available online at no charge as one of the databases on GPO Access, a service of the U.S. Government Printing Office.

The online edition of the **Federal Register** *www.access.gpo.gov/nara,* available through GPO Access, is issued under the authority of the Administrative Committee of the Federal Register as the official legal equivalent of the paper and microfiche editions (44 U.S.C. 4101 and 1 CFR 5.10). It is updated by 6 a.m. each day the **Federal Register** is published and includes both text and graphics from Volume 59, Number 1 (January 2, 1994) forward.

For more information about GPO Access, contact the GPO Access User Support Team, call toll free 1-888-293-6498; DC area 202-512-1530; fax at 202-512-1262; or via email at *gpoaccess@gpo.gov.* The Support Team is available between 7:00 a.m. and 9:00 p.m. Eastern Time, Monday–Friday, except official holidays.

The annual subscription price for the **Federal Register** paper edition is $749 plus postage, or $808, plus postage, for a combined **Federal Register, Federal Register** Index and List of CFR Sections Affected (LSA) subscription; the microfiche edition of the **Federal Register** including the **Federal Register** Index and LSA is $165, plus postage. Six month subscriptions are available for one-half the annual rate. The prevailing postal rates will be applied to orders according to the delivery method requested. The price of a single copy of the daily **Federal Register,** including postage, is based on the number of pages: $11 for an issue containing less than 200 pages; $22 for an issue containing 200 to 400 pages; and $33 for an issue containing more than 400 pages. Single issues of the microfiche edition may be purchased for $3 per copy, including postage. Remit check or money order, made payable to the Superintendent of Documents, or charge to your GPO Deposit Account, VISA, MasterCard, American Express, or Discover. Mail to: New Orders, Superintendent of Documents, P.O. Box 371954, Pittsburgh, PA 15250-7954; or call toll free 1-866-512-1800, DC area 202-512-1800; or go to the U.S. Government Online Bookstore site, *bookstore@gpo.gov.*

There are no restrictions on the republication of material appearing in the **Federal Register.**

How To Cite This Publication: Use the volume number and the page number. Example: 69 FR 12345.

Postmaster: Send address changes to the Superintendent of Documents, Federal Register, U.S. Government Printing Office, Washington DC 20402, along with the entire mailing label from the last issue received.

SUBSCRIPTIONS AND COPIES

PUBLIC

Subscriptions:

Paper or fiche	**202–512–1800**
Assistance with public subscriptions	**202–512–1806**

General online information **202–512–1530; 1–888–293–6498**

Single copies/back copies:

Paper or fiche	**202–512–1800**
Assistance with public single copies	**1–866–512–1800 (Toll-Free)**

FEDERAL AGENCIES

Subscriptions:

Paper or fiche	**202–741–6005**
Assistance with Federal agency subscriptions	**202–741–6005**

What's NEW!

Federal Register Table of Contents via e-mail

Subscribe to FEDREGTOC, to receive the **Federal Register** Table of Contents in your e-mail every day.

If you get the HTML version, you can click directly to any document in the issue.

To subscribe, go to **http://listserv.access.gpo.gov** and select:

Online mailing list archives
FEDREGTOC-L
Join or leave the list

Then follow the instructions.

What's NEW!

Regulations.gov, the award-winning Federal eRulemaking Portal

Regulations.gov is the one-stop U.S. Government web site that makes it easy to participate in the regulatory process.

Try this fast and reliable resource to find all rules published in the *Federal Register* that are currently open for public comment. Submit comments to agencies by filling out a simple web form, or use available email addresses and web sites.

The Regulations.gov e-democracy initiative is brought to you by NARA, GPO, EPA and their eRulemaking partners.

Visit the web site at: **http://www.regulations.gov**

Printed on recycled paper.

Contents

Federal Register

Vol. 69, No. 95

Monday, May 17, 2004

Agriculture Department
See Animal and Plant Health Inspection Service
See Federal Crop Insurance Corporation
See Forest Service
RULES
Import quotas and fees:
Dairy tariff-rate quota licensing, 27818–27821
NOTICES
Grants and cooperative agreements; availability, etc.:
Renewable Energy Systems and Energy Efficiency Improvements Program; correction, 27887

Animal and Plant Health Inspection Service
RULES
Livestock and poultry disease control:
Spring viremia of carp; indemnity payment, 27823–27827
Plant-related quarantine, domestic:
Karnal bunt, 27821–27823

Centers for Disease Control and Prevention
NOTICES
Grants and cooperative agreements; availability, etc.:
Vital Statistics Re-engineering Program, 27928–27929

Coast Guard
RULES
Drawbridge operations:
Virginia, 27834–27836
Ports and waterways safety:
Cleveland Harbor, OH; security zone, 27836–27837
PROPOSED RULES
Drawbridge operations:
District of Columbia, 27872–27874
Maryland, 27870–27872
NOTICES
Meetings:
Chemical Transportation Advisory Committee, 27945–27946

Commerce Department
See International Trade Administration
See National Oceanic and Atmospheric Administration
NOTICES
Agency information collection activities; proposals, submissions, and approvals, 27888–27889

Committee for the Implementation of Textile Agreements
NOTICES
African Growth and Opportunity Act; implementation:
Singapore; handloomed fabrics and handmade articles, 27890–27891
Cotton, wool, and man-made textiles:
Brazil, 27891–27892
Columbia, 27892
Romania, 27892–27893
Singapore, 27893
Taiwan, 27893–27895
Vietnam, 27895–27896
Export visa requirements; certification, waivers, etc.:
Various countries, 27896

Commodity Futures Trading Commission
NOTICES
Meetings; Sunshine Act, 27896–27897

Consumer Product Safety Commission
NOTICES
Agency information collection activities; proposals, submissions, and approvals, 27897

Defense Department
See Navy Department
NOTICES
Committees; establishment, renewal, termination, etc.:
Women in the Services Advisory Committee, 27897
Meetings:
President's Information Technology Advisory Committee, 27897–27898

Education Department
NOTICES
Agency information collection activities; proposals, submissions, and approvals, 27900–27901
Postsecondary education:
William D. Ford Federal Direct Loan Program—
Income contingent repayment plan formula; annual updates, 27901–27906

Energy Department
See Energy Information Administration
See Federal Energy Regulatory Commission
NOTICES
Meetings:
Environmental Management Site-Specific Advisory Board—
Rocky Flats, CO, 27906
National Petroleum Council, 27906
Natural gas exportation and importation:
OGE Energy Resources, Inc., et al., 27906–27907

Energy Information Administration
NOTICES
Agency information collection activities; proposals, submissions, and approvals, 27907–27908

Environmental Protection Agency
RULES
Air quality implementation plans; approval and promulgation; various States:
California, 27837–27843
NOTICES
Agency information collection activities; proposals, submissions, and approvals, 27919–27921
Air pollution control:
Clean Air Act Advisory Committee; Title V Operating Permits Program Task Force, 27921–27922
Grants and cooperative agreements; availability, etc.:
National Environmental Performance Track Program, 27922–27924
Meetings:
Mobile Sources Technical Review Subcommittee, 27924
Science Advisory Board, 27924–27925

Federal Aviation Administration
RULES
Airworthiness directives:
Bombardier, 27829–27833
PROPOSED RULES
Air carrier certification and operations:
Antidrug and alcohol misuse prevention programs for personnel engaged in specified aviation activities, 27979–27987
Airworthiness directives:
Airbus, 27865–27866, 27868–27870
Boeing, 27866–27868

Federal Communications Commission
RULES
Practice and procedure:
Debt Collection Improvement Act of 1966; implementation—
Delinquent debtors; benefits applications or requests, 27843–27861
PROPOSED RULES
Radio broadcasting:
Digital audio systems; impact on terrestrial radio service, 27874–27885

Federal Crop Insurance Corporation
PROPOSED RULES
Crop insurance regulation:
Peanut, 27864–27865

Federal Emergency Management Agency
NOTICES
Disaster and emergency areas:
Illinois, 27947
North Dakota, 27947

Federal Energy Regulatory Commission
RULES
Filing fees; annual update, 27833–27834
NOTICES
Electric rate and corporate regulation filings, 27911–27915
Environmental statements; availability, etc.:
PacifiCorp, 27915–27917
Environmental statements; notice of intent:
KeySpan LNG, L.P., 27917–27919
Meetings:
Merchant generation assets; acquisition and disposition by public utilities; technical conference, 27919
Solicitation processes for public utilities; technical conference, 27919
Applications, hearings, determinations, etc.:
Algonquin Gas Transmission Co., 27908
Columbia Gas Transmission Corp., 27909
Dominion Transmission, Inc., 27909
Iroquois Gas Transmission System, L.P., 27909–27910
Northern Border Pipeline Co., 27910
Transcontinental Gas Pipe Line Corp., 27910–27911
Trunkline Gas Co., LLC, 27911

Federal Mine Safety and Health Review Commission
NOTICES
Meetings; Sunshine Act, 27955

Federal Railroad Administration
NOTICES
Agency information collection activities; proposals, submissions, and approvals, 27968–27969

Federal Reserve System
NOTICES
Banks and bank holding companies:
Change in bank control, 27925
Formations, acquisitions, and mergers, 27925–27926

Federal Trade Commission
NOTICES
Agency information collection activities; proposals, submissions, and approvals, 27926–27927

Federal Transit Administration
NOTICES
Section 176 of the Consolidated Appropriations Act, 2004; implementation, 27969–27970

Fish and Wildlife Service
PROPOSED RULES
Endangered and threatened species:
Critical habitat designations—
Arroyo toad; correction, 27886
NOTICES
Endangered and threatened species and marine mammal permit applications, 27947–27949
Endangered and threatened species permit applications, 27949–27952
Environmental statements; notice of intent:
Hawaii Natural Resources Department; Federal grant use, 27952–27953
Marine mammal permit applications, 27953–27954

Forest Service
NOTICES
Meetings:
Resource Advisory Committees—
Glenn/Colusa County, 27887
Lake County, 27887–27888
Northeast Oregon Forests, 27887

Health and Human Services Department
See Centers for Disease Control and Prevention
See National Institutes of Health
NOTICES
Meetings:
National Vaccine Advisory Committee, 27928

Homeland Security Department
See Coast Guard
See Federal Emergency Management Agency

Housing and Urban Development Department
NOTICES
Grants and cooperative agreements; availability, etc.:
Community development and affordable housing; capacity building, 27975–27978

Interior Department
See Fish and Wildlife Service
See Minerals Management Service

Internal Revenue Service
NOTICES
Meetings:
Tax Exempt and Government Entities Advisory Committee, 27971

International Trade Administration
NOTICES
Antidumping:
Stainles steel bar from—
United Kingdom, 27889

Labor Department
See Labor Statistics Bureau
See Mine Safety and Health Administration
See Occupational Safety and Health Administration

Labor Statistics Bureau
NOTICES
Committees; establishment, renewal, termination, etc.:
Federal Economic Statistics Advisory Commitee, 27954–27955

Minerals Management Service
NOTICES
Meetings:
Royality Policy Committee; public nominations, 27954

Mine Safety and Health Administration
NOTICES
Safety standard petitions:
Dakota Westmoreland Corp., 27955

Mine Safety and Health Federal Review Commission
See Federal Mine Safety and Health Review Commission

National Council on Disability
NOTICES
Meetings; Sunshine Act, 27955–27956

National Credit Union Administration
RULES
Credit unions:
Organization and operations; technical corrections, 27827–27829
NOTICES
Meetings; Sunshine Act, 27956

National Highway Traffic Safety Administration
PROPOSED RULES
Motor vehicle safety standards:
Side impact protection; reporting requirements, 27989–28034

National Institutes of Health
NOTICES
Meetings:
National Cancer Institute, 27929–27930
National Eye Institute, 27930
National Heart, Lung, and Blood Institute, 27930–27932
National Institute of Allergy and Infectious Diseases, 27932, 27935
National Institute of Arthritis and Musculoskeletal and Skin Diseases, 27936
National Institute of Child Health and Human Development, 27934–27936
National Institute of Diabetes and Digestive and Kidney Diseases, 27933, 27936–27937
National Institute of Mental Health, 27932, 27935
National Institute on Aging, 27933–27934
National Institute on Deafness and Other Communication Disorders, 27932–27933
National Library of Medicine, 27937
Scientific Review Center, 27937–27939
Patent licenses; non-exclusive, exclusive, or partially exclusive:
Reata Discovery, Inc., 27939
Reports and guidance documents; availability, etc.:
Azithromycin for treatment of pneumonia in preterm neonate; prevention of bronchopulmonary dysplasia; comment request, 27939–27942
Rifampin for treatment of baterial endocarditis; comment request, 27942–27945

National Oceanic and Atmospheric Administration
NOTICES
Environmental statements; notice of intent:
National Estuarine Research Reserve System—
Coastal zone management program evaluations; various states, 27889–27890
Permits:
Exempted fishing, 27890

Navy Department
NOTICES
Privacy Act:
System of records, 27898–27900

Nuclear Regulatory Commission
NOTICES
Meetings:
Nuclear Waste Advisory Committee, 27956–27957

Occupational Safety and Health Administration
PROPOSED RULES
Construction safety and health standards:
Crane and Derrick Negotiated Rulemaking Advisory Committee—
Meetings, 27870

Personnel Management Office
RULES
Physicians' comparability allowances, 27817–27818

Presidential Documents
EXECUTIVE ORDERS
Committees; establishment, renewal, termination, etc:
President's Advisory Commission on Asian Americans and Pacific Islanders (EO 13339), 28035–28039

Research and Special Programs Administration
RULES
Pipeline safety:
Gas pipeline safety standards; pressure limiting and regulation stations, 27861–27863

Securities and Exchange Commission
NOTICES
Self-regulatory organizations; proposed rule changes:
Chicago Board Options Exchange, Inc., 27957–27959
National Association of Security Dealers, Inc., 27959–27963
National Securities Clearing Corp., 27964–27965
Pacific Exchange, Inc., 27965–27967

Small Business Administration
PROPOSED RULES
Small business size standards:
Size standards for most industries and SBA programs; restructuring, 27865

State Department
NOTICES
Committees; establishment, renewal, termination, etc.:
International Law Advisory Committee, 27967

Surface Transportation Board
NOTICES
Railroad consolidations, mergers, and acquisitions of control:
Temporary trackage rights exemption, 27970–27971

Tennessee Valley Authority
NOTICES
Meetings; Sunshine Act, 27967–27968

Textile Agreements Implementation Committee
See Committee for the Implementation of Textile Agreements

Transportation Department
See Federal Aviation Administration
See Federal Railroad Administration
See Federal Transit Administration
See National Highway Traffic Safety Administration
See Research and Special Programs Administration
See Surface Transportation Board

Treasury Department
See Internal Revenue Service

Veterans Affairs Department
NOTICES
Agency information collection activities; proposals, submissions, and approvals, 27971–27973

Separate Parts In This Issue

Part II
Housing and Urban Development Department, 27975–27978

Part III
Transportation Department, Federal Aviation Administration, 27979–27987

Part IV
Transportation Department, National Highway Traffic Safety Administration, 27989–28034

Part V
Executive Office of the President, Presidential Documents, 28035–28039

Reader Aids
Consult the Reader Aids section at the end of this issue for phone numbers, online resources, finding aids, reminders, and notice of recently enacted public laws.

To subscribe to the Federal Register Table of Contents LISTSERV electronic mailing list, go to http://listserv.access.gpo.gov and select Online mailing list archives, FEDREGTOC-L, Join or leave the list (or change settings); then follow the instructions.

CFR PARTS AFFECTED IN THIS ISSUE

A cumulative list of the parts affected this month can be found in the Reader Aids section at the end of this issue.

13 CFR

Executive Orders:
13339.....28037

5 CFR
595.....27817

7 CFR
6.....27818
301.....27821

Proposed Rules:
457.....27864

9 CFR
53.....27823
71.....27823

12 CFR
701.....27827
703.....27827
709.....27827
715.....27827
723.....27827
725.....27827

13 CFR

Proposed Rules:
121.....27865

14 CFR
39 (2 documents) 27829, 27831

Proposed Rules:
39 (3 documents) 27865, 27866, 27868
121.....27980

18 CFR
381.....27833

29 CFR

Proposed Rules:
1926.....27870

33 CFR
117.....27834
165.....27836

Proposed Rules:
117 (2 documents) 27870, 27872

40 CFR
52.....27837

47 CFR
0.....27843
1.....27843

Proposed Rules:
2.....27874
73.....27874
74.....27874

49 CFR
192.....27861

Proposed Rules:
571.....27990
598.....27990

50 CFR

Proposed Rules:
17.....27886

Rules and Regulations

Federal Register
Vol. 69, No. 95
Monday, May 17, 2004

This section of the FEDERAL REGISTER contains regulatory documents having general applicability and legal effect, most of which are keyed to and codified in the Code of Federal Regulations, which is published under 50 titles pursuant to 44 U.S.C. 1510.

The Code of Federal Regulations is sold by the Superintendent of Documents. Prices of new books are listed in the first FEDERAL REGISTER issue of each week.

OFFICE OF PERSONNEL MANAGEMENT

5 CFR Part 595

RIN 3206–AJ96

Physicians' Comparability Allowances

AGENCY: Office of Personnel Management.

ACTION: Final rule.

SUMMARY: The Office of Personnel Management is issuing final regulations on the physicians' comparability allowance program. We have rewritten these regulations in a question-and-answer format to improve reader understanding and administration of this program.

EFFECTIVE DATE: June 16, 2004.

FOR FURTHER INFORMATION CONTACT: Vicki Draper by telephone at (202) 606–2858; by fax at (202) 606–0824; or by email at *pay-performance-policy@opm.gov.*

SUPPLEMENTARY INFORMATION: On July 29, 2003, the Office of Personnel Management (OPM) issued proposed regulations to revise 5 CFR part 595, Physicians' Comparability Allowances. (See 68 FR 44489.) The 60-day comment period for the proposed regulations ended on September 29, 2003. We received comments from one Federal agency. The agency suggested that we add the sentence ''A physician who is employed on less than a half-time or intermittent basis is excluded from the physicians' comparability allowance program'' to the regulation. We agree and have added this sentence to 5 CFR 595.105(d).

E.O. 12866, Regulatory Review

This rule has been reviewed by the Office of Management and Budget in accordance with E.O. 12866.

Regulatory Flexibility Act

I certify that these regulations would not have a significant economic impact on a substantial number of small entities because they would apply only to Federal agencies and employees.

List of Subjects in 5 CFR Part 595

Government employees, Health professions, Wages.

Office of Personnel Management.

Kay Coles James,

Director.

■ Accordingly, OPM is amending part 595 of title 5 of the Code of Federal Regulations as follows:

PART 595—PHYSICIANS' COMPARABILITY ALLOWANCES

■ 1. The authority citation for part 595 continues to read as follows:

Authority: 5 U.S.C. 5948; E.O. 12109, 44 FR 1067, Jan. 3, 1979.

■ 2. Section 595.101 is revised to read as follows:

§ 595.101 Purpose.

Section 5948 of title 5, United States Code, authorizes the payment of allowances to certain eligible Federal physicians who enter into service agreements with their agencies. These allowances are paid only to categories of physicians for which the agency is experiencing recruitment and retention problems and are fixed at the minimum amounts necessary to deal with such problems. The President has delegated regulatory responsibility for this program to the Director of OPM, acting in consultation with the Office of Management and Budget. This part contains the regulations, criteria and conditions which the Director of OPM, in consultation with the Director of the Office of Management and Budget, has prescribed for the administration of the physicians' comparability allowance program. This part supplements and implements 5 U.S.C. 5948 and should be read together with that section of law.

■ 3. In § 595.102, the section heading and paragraphs (a) and (b) are revised to read as follows:

§ 595.102 Who is covered by this program?

(a) This program covers individuals employed as physicians under the Federal pay systems listed in 5 U.S.C. 5948(g)(1), except as provided in 5 U.S.C. 5948(b). For the purposes of this part, an individual is *employed as a physician* only if he or she is serving in a position the duties and responsibilities of which could not be satisfactorily performed by an incumbent who is not a physician.

(b) Section 5948(b) of title 5, United States Code, prohibits the payment of physicians' comparability allowances to certain physicians, including physicians who are reemployed annuitants. For the purpose of applying this prohibition, *reemployed annuitant* means an individual who is receiving or has title to and has applied for an annuity under any retirement program of the Government of the United States, or the government of the District of Columbia, on the basis of service as a civilian employee.

* * * * *

■ 4. In § 595.103, the section heading and paragraph (a) are revised to read as follows:

§ 595.103 What requirements must agencies establish for determining which physician positions are covered?

(a) The head of each agency must determine categories of physician positions for which there is a significant recruitment and retention problem, and physicians' comparability allowances may be paid only to physicians serving in positions in such categories.

* * * * *

■ 5. In § 595.104, the section heading and the introductory text are revised to read as follows:

§ 595.104 What criteria are used to identify a recruitment and retention problem?

The head of each agency may determine that a significant recruitment and retention problem exists for each category of physician position established under § 595.103 only if the following conditions are met with respect to the category:

* * * * *

■ 6. In § 595.105, the section heading and paragraphs (a), (b), (d), and (e) are revised to read as follows:

§ 595.105 What criteria must be used to determine the amount of a physicians' comparability allowance?

(a) The amount of the comparability allowance payable for each category of

physician positions established under § 595.103 must be the minimum amount necessary to deal with the recruitment and retention problem identified under § 595.104 for that category of positions. In determining this amount, the agency head must consider the relative earnings, responsibilities, expenses, workload, working conditions, conditions of employment, and personnel benefits for physicians in each category and for comparable physicians inside and outside the Federal Government.

(b) Agencies may not pay a physicians' comparability allowance in excess of $14,000 annually to a physician with 24 months or less of service as a Government physician. Agencies may not pay a physicians' comparability allowance in excess of $30,000 annually to a physician with more than 24 months of service as a Government physician.

* * * * *

(d) A physician who is employed on a regularly scheduled part-time basis of half-time or more is eligible to receive a physicians' comparability allowance, but any such allowance must be prorated according to the proportion of the physicians' work schedule to full-time employment. A physician who is employed on less than a half-time or intermittent basis is excluded from the physicians' comparability allowance program.

(e) A physician who is serving with the Government under a loan repayment program must have the amount of any loan being repaid deducted from any physicians' comparability allowance for which he or she is eligible and may receive only that portion of such allowance which exceeds the amount of the loan being repaid during the period of employment required by the service agreement under the student loan repayment program.

■ 7. Section 595.106 is revised to read as follows:

§ 595.106 What termination and refund provisions are required?

Each service agreement entered into by an agency and a physician under the comparability allowance program must prescribe the terms under which the agreement may be terminated and the amount of allowance, if any, required to be refunded by the physician for each reason for termination. In the case of each service agreement covering a period of service of more than 1 year, the service agreement must include a provision that, if the physician completes more than 1 year of service pursuant to the agreement, but fails to complete the full period of service specified in the agreement either voluntarily or because of misconduct by the physician, the physician must refund the amount of allowance he or she has received under the agreement for the 26 weeks of service immediately preceding the termination (or for a longer period, if specified in the agreement).

■ 8. In § 595.107, the section heading and paragraphs (b) and (c) are revised to read as follows:

§ 595.107 What are the requirements for implementing a physicians' comparability allowance program?

* * * * *

(b) The agency must submit to the Office of Management and Budget a complete description of its plan for implementing the physicians' comparability allowance program, including the following:

(1) An identification of the categories of physician positions the agency has established under § 595.103, and of the basis for such categories;

(2) An explanation of the determination that a recruitment and retention problem exists for each such category, in accordance with the criteria in § 595.104; and

(3) An explanation of the basis for the amount of comparability allowance determined necessary for each category of physician position under § 595.105.

(c) The Office of Management and Budget (OMB) will review each agency's plan for implementing the physicians' comparability allowance program and determine whether the plan is consistent with 5 U.S.C. 5948 and the requirements of this part. The Office of Management and Budget will advise the agency within 45 calendar days after receipt of the plan as to whether the plan is consistent with 5 U.S.C. 5948 and this part or what changes need to be made.

§ 595.108 [Removed]

■ 9. Section 595.108 is removed.

[FR Doc. 04–11015 Filed 5–14–04; 8:45 am]

BILLING CODE 6325–39–P

DEPARTMENT OF AGRICULTURE

Office of the Secretary

7 CFR Part 6

Adjustment of Appendices to the Dairy Tariff-Rate Import Quota Licensing Regulation for the 2004 Tariff-Rate Quota Year

AGENCY: Office of the Secretary, USDA.

ACTION: Final rule.

SUMMARY: This document sets forth the revised appendices to the Dairy Tariff-Rate Import Quota Licensing Regulation for the 2004 quota year reflecting the cumulative annual transfers from Appendix 1 to Appendix 2 for certain dairy product import licenses permanently surrendered by licensees or revoked by the Licensing Authority.

EFFECTIVE DATE: May 17, 2004.

FOR FURTHER INFORMATION CONTACT: Michael I. Hankin, Dairy Import Quota Manager, Import Policies and Programs Division, STOP 1021, U.S. Department of Agriculture, 1400 Independence Avenue, SW., Washington, DC 20250–1021 or telephone at (202) 720–9439.

SUPPLEMENTARY INFORMATION: The Foreign Agricultural Service, under a delegation of authority from the Secretary of Agriculture, administers the Dairy Tariff-Rate Import Quota Licensing Regulation codified at 7 CFR 6.20–6.37 that provides for the issuance of licenses to import certain dairy articles under tariff-rate quotas (TRQs) as set forth in the Harmonized Tariff Schedule of the United States. These dairy articles may only be entered into the United States at the low-tier tariff by or for the account of a person or firm to whom such licenses have been issued and only in accordance with the terms and conditions of the regulation.

Licenses are issued on a calendar year basis, and each license authorizes the license holder to import a specified quantity and type of dairy article from a specified country of origin. The Import Policies and Programs Division, Foreign Agricultural Service, U.S. Department of Agriculture, issues these licenses and, in conjunction with the U.S. Customs Service, monitors their use.

The regulation at 7 CFR 6.34(a) states: ''Whenever a historical license (Appendix 1) is not issued to an applicant pursuant to the provisions of § 6.23, is permanently surrendered or is revoked by the Licensing Authority, the amount of such license will be transferred to Appendix 2.'' Section 6.34(b) provides that the cumulative annual transfers will be published in the **Federal Register**. Accordingly, this document sets forth the revised Appendices for the 2004 tariff-rate quota year.

List of Subjects in 7 CFR Part 6

Agricultural commodities, Cheese, Dairy products, Imports, Reporting and record keeping requirements.

Issued at Washington, DC the 11th day of May, 2004.

Michael I. Hankin.

Licensing Authority.

■ Accordingly, 7 CFR Part 6 is amended as follows:

PART 6—IMPORT QUOTAS AND FEES

Subpart—Dairy Tariff-Rate Import Quota Licensing

■ 1. The authority citation for Part 6, Subpart—Dairy Tariff-Rate Import Quota Licensing continues to read as follows:

Authority: Additional U.S. Notes 6, 7, 8, 12, 14, 16–23 and 25 to Chapter 4 and General Note 15 of the Harmonized Tariff Schedule of the United States (19 U.S.C. 1202), Pub. L. 97–258, 96 Stat. 1051, as amended (31 U.S.C. 9701), and secs. 103 and 404, Pub. L. 103–465, 108 Stat. 4819 (19 U.S.C. 3513 and 3601).

■ 2. Appendices 1, 2 and 3 to Subpart—Dairy Tariff-Rate Import Quota Licensing are revised to read as follows:

APPENDICES 1, 2 AND 3 TO SUBPART—DAIRY TARIFF-RATE IMPORT QUOTA LICENSING

[Articles Subject to: Appendix 1, Historical Licenses; Appendix 2, Nonhistorical Licenses; and Appendix 3, Designated Importer Licenses for Quota Year 2004 (quantities in kilograms)]

Article by Additional U.S. Note Number and Country of Origin NON-CHEESE ARTICLES	Appendix 1	Appendix 2	Appendix 3	
			Tokyo Round	Uruguay Round
BUTTER (NOTE 6)	5,421,214	1,555,786		
EU–15	75,918	20,243		
New Zealand	118,082	32,511		
Other Countries	55,902	18,033		
Any Country	5,171,312	1,484,999		
DRIED SKIM MILK (NOTE 7)	600,076	4,660,924		
Australia	600,076			
Canada		219,565		
Any Country		4,441,359		
DRIED WHOLE MILK (NOTE 8)	3,175	3,318,125		
New Zealand	3,175			
Any Country		3,318,125		
DRIED BUTTERMILK/WHEY (NOTE 12)	63,820	161,161		
Canada		161,161		
New Zealand	63,820			
BUTTER SUBSTITUTES CONTAINING OVER 45 PERCENT OF BUTTERFAT AND/OR BUTTER OIL (NOTE 14)		6,080,500		
Any Country		6,080,500		
TOTAL: NON-CHEESE ARTICLES	6,088,285	15,776,496		

Article by Additional U.S. Note Number and Country of Origin CHEESE ARTICLES	Appendix 1	Appendix 2	Appendix 3	
			Tokyo Round	Uruguay Round
CHEESE AND SUBSTITUTES FOR CHEESE (EXCEPT: SOFT RIPENED COW'S MILK CHEESE; CHEESE NOT CONTAINING COW'S MILK; CHEESE (EXCEPT COTTAGE CHEESE) CONTAINING 0.5 PERCENT OR LESS BY WEIGHT OF BUTTERFAT; AND, ARTICLES WITHIN THE SCOPE OF OTHER IMPORT QUOTAS PROVIDED FOR IN THIS SUBCHAPTER) (NOTE 16)	23,527,549	7,942,182	9,661,128	7,496,000
Argentina	7,690		92,310	
Australia	535,628	5,542	758,830	1,750,000
Canada	1,031,946	109,054		
Costa Rica				1,550,000
Czech Republic				200,000
EU–15	15,365,028	6,966,404	1,132,568	2,346,000
Of which Portugal is:	127,536	1,773	223,691	
Israel	79,696		593,304	
Iceland	294,000		29,000	
New Zealand	4,461,713	353,759	6,506,528	
Norway	124,982	25,018		
Poland	917,497	18,727		300,000
Slovak Republic				600,000
Switzerland	597,513	73,899	548,588	500,000
Uruguay				250,000
Other Countries	111,856	89,779		
Any Country		300,000		
BLUE-MOLD CHEESE (EXCEPT STILTON PRODUCED IN THE UNITED KINGDOM) AND CHEESE AND SUBSTITUTES FOR CHEESE CONTAINING, OR PROCESSED FROM, BLUE-MOLD CHEESE (NOTE 17)	2,290,547	190,454		430,000
Argentina	2,000			
EU–15	2,288,546	190,454		300,000
Chile				80,000

Article by Additional U.S. Note Number and Country of Origin CHEESE ARTICLES	Appendix 1	Appendix 2	Appendix 3	
			Tokyo Round	Uruguay Round
Czech Republic	.....	.....	.....	50,000
Other Countries	1	.....	.....	.....
CHEDDAR CHEESE, AND CHEESE AND SUBSTITUTES FOR CHEESE CONTAINING, OR PROCESSED FROM, CHEDDAR CHEESE (NOTE 18)	3,655,039	628,817	519,033	7,620,000
Australia	937,721	46,778	215,501	1,250,000
Chile	.....	.....	.....	220,000
Czech Republic	.....	.....	.....	50,000
EU–15	52,404	210,596	.....	1,000,000
New Zealand	2,539,040	257,428	303,532	5,100,000
Other Countries	125,874	14,015	.....	.....
Any Country	.....	100,000	.....	.....
AMERICAN-TYPE CHEESE, INCLUDING COLBY, WASHED CURD AND GRANULAR CHEESE (BUT NOT INCLUDING CHEDDAR) AND CHEESE AND SUBSTITUTES FOR CHEESE CONTAINING OR PROCESSED FROM SUCH AMERICAN-TYPE CHEESE (NOTE 19)	2,842,435	323,118	357,003	.....
Australia	830,124	50,874	119,002	.....
EU–15	186,222	167,778	.....	.....
New Zealand	1,662,224	99,775	238,001	.....
Other Countries	163,865	4,691	.....	.....
EDAM AND GOUDA CHEESE, AND CHEESE AND SUBSTITUTES FOR CHEESE CONTAINING, OR PROCESSED FROM, EDAM AND GOUDA CHEESE (NOTE 20)	5,252,765	353,637	.....	1,210,000
Argentina	119,003	5,997	.....	110,000
Czech Republic	.....	.....	.....	100,000
EU–15	5,009,619	279,381	.....	1,000,000
Norway	114,318	52,682	.....	.....
Other Countries	9,825	15,577	.....	.....
ITALIAN-TYPE CHEESES, MADE FROM COW'S MILK, (ROMANO MADE FROM COW'S MILK, REGGIANO, PARMESAN, PROVOLONE, PROVOLETTI, SBRINZ, AND GOYA-NOT IN ORIGINAL LOAVES) AND CHEESE AND SUBSTITUTES FOR CHEESE CONTAINING, OR PROCESSED FROM, SUCH ITALIAN-TYPE CHEESES, WHETHER OR NOT IN ORIGINAL LOAVES (NOTE 21)	6,491,099	1,029,448	795,517	5,165,000
Argentina	3,944,769	180,714	367,517	1,890,000
EU–15	2,535,930	846,070	.....	700,000
Poland	.....	.....	.....	1,325,000
Romania	.....	.....	.....	500,000
Uruguay	.....	.....	428,000	750,000
Other Countries	10,400	2,664	.....	.....
SWISS OR EMMENTHALER CHEESE OTHER THAN WITH EYE FORMATION, GRUYERE-PROCESS CHEESE AND CHEESE AND SUBSTITUTES FOR CHEESE CONTAINING, OR PROCESSED FROM, SUCH CHEESES (NOTE 22)	5,676,043	975,271	823,519	380,000
EU–15	4,330,758	821,236	393,006	380,000
Switzerland	1,270,525	148,962	430,513	.....
Other Countries	74,760	5,073	.....	.....
CHEESE AND SUBSTITUTES FOR CHEESE, CONTAINING 0.5 PERCENT OR LESS BYWEIGHT OF BUTTERFAT (EXCEPT ARTICLES WITHIN THE SCOPE OF OTHER TARIFF-RATE QUOTAS PROVIDED FOR IN THIS SUBCHAPTER), AND MARGARINE CHEESE (NOTE 23)	3,037,225	1,387,683	1,050,000	.....
EU–15	3,037,224	1,212,776	.....	.....
Israel	.....	.....	50,000	.....
New Zealand	.....	.....	1,000,000	.....
Poland	.....	174,907	.....	.....
Other Countries	1	.....	.....	.....
SWISS OR EMMENTHALER CHEESE WITH EYE FORMATION (NOTE 25)	18,149,617	4,147,714	9,557,945	2,620,000
Argentina	.....	9,115	70,885	.....
Australia	209,698	.....	290,302	.....
Canada	.....	.....	70,000	.....
Czech Republic	.....	.....	.....	400,000
Hungary	.....	.....	.....	800,000
EU–15	13,190,754	3,286,074	4,003,172	1,220,000
Iceland	149,999	.....	150,001	.....
Israel	27,000	.....	.....	.....
Norway	3,192,843	462,467	3,227,690	.....
Switzerland	1,294,048	390,057	1,745,895	200,000
Other Countries	85,275	1	.....	.....
TOTAL: CHEESE ARTICLES	70,922,319	16,978,324	22,764,145	24,921,000

[FR Doc. 04–11057 Filed 5–14–04; 8:45 am]
BILLING CODE 3410–10–P

DEPARTMENT OF AGRICULTURE

Animal and Plant Health Inspection Service

7 CFR Part 301

[Docket No. 04–038–1]

Karnal Bunt; Regulated Areas

AGENCY: Animal and Plant Health Inspection Service, USDA.

ACTION: Interim rule and request for comments.

SUMMARY: We are amending the Karnal bunt regulations to make changes to the list of areas regulated because of Karnal bunt, a fungal disease of wheat. We are removing certain areas in Arizona and Texas from the list of regulated areas based on our determination that the fields in those areas meet our criteria for release from regulation. This action is necessary to relieve restrictions that are no longer warranted.

DATES: This interim rule was effective May 12, 2004. We will consider all comments that we receive on or before July 16, 2004.

ADDRESSES: You may submit comments by any of the following methods:

- Postal Mail/Commercial Delivery: Please send four copies of your comment (an original and three copies) to Docket No. 04–038–1, Regulatory Analysis and Development, PPD, APHIS, Station 3C71, 4700 River Road Unit 118, Riverdale, MD 20737–1238. Please state that your comment refers to Docket No. 04–038–1.
- E-mail: Address your comment to *regulations@aphis.usda.gov.* Your comment must be contained in the body of your message; do not send attached files. Please include your name and address in your message and ''Docket No. 04–038–1'' on the subject line.
- Agency Web site: Go to *http://www.aphis.usda.gov/ppd/rad/cominst.html* for a form you can use to submit an e-mail comment through the APHIS Web site.
- Federal eRulemaking Portal: Go to *http://www.regulations.gov* and follow the instructions for locating this docket and submitting comments.

Reading Room: You may read any comments that we receive on this docket in our reading room. The reading room is located in room 1141 of the USDA South Building, 14th Street and Independence Avenue SW., Washington, DC. Normal reading room hours are 8 a.m. to 4:30 p.m., Monday through Friday, except holidays. To be sure someone is there to help you, please call (202) 690–2817 before coming.

Other Information: You may view APHIS documents published in the **Federal Register** and related information, including the names of groups and individuals who have commented on APHIS dockets, on the Internet at *http://www.aphis.usda.gov/ppd/rad/webrepor.html.*

FOR FURTHER INFORMATION CONTACT: Dr. Matthew Royer, Senior Program Adviser, Pest Detection and Management Programs, PPQ, APHIS, 4700 River Road Unit 26, Riverdale, MD 20737–1236; (301) 734–7819.

SUPPLEMENTARY INFORMATION: Karnal bunt is a fungal disease of wheat (*Triticum aestivum*), durum wheat (*Triticum durum*), and triticale (*Triticum aestivum X Secale cereale*), a hybrid of wheat and rye. Karnal bunt is caused by the smut fungus *Tilletia indica* (Mitra) Mundkur and is spread primarily through the movement of infected seed. Some countries in the international wheat market regulate Karnal bunt as a fungal disease requiring quarantine; therefore, without measures taken by the Animal and Plant Health Inspection Service (APHIS), United States Department of Agriculture, to prevent its spread, the presence of Karnal bunt in the United States could have significant consequences with regard to the export of wheat to international markets.

Upon detection of Karnal bunt in Arizona in March of 1996, Federal quarantine and emergency actions were imposed to prevent the interstate spread of the disease to other wheat producing areas in the United States. The quarantine continues in effect, although it has since been modified, both in terms of its physical boundaries and in terms of its restrictions on the production and movement of regulated articles from regulated areas. The regulations regarding Karnal bunt are set forth in 7 CFR 301.89–1 through 301.89–16 (referred to below as the regulations).

Regulated Areas

The regulations in § 301.89–3(e) provide that we will classify a field or area as a regulated area when it is:

- A field planted with seed from a lot found to contain a bunted wheat kernel;
- A distinct definable area that contains at least one field that was found during as survey to contain a bunted wheat kernel. The distinct definable area may include an area where Karnal bunt is not known to exist but where intensive surveys are required because of the area's proximity to a field found during survey to contain a bunted wheat kernel; or
- A distinct definable area that contains at least one field that has been determined to be associated with grain at a handling facility containing a bunted kernel of a host crop. The distinct definable area may include an area where Karnal bunt is not known to exist but where intensive surveys are required because of that area's proximity to the field associated with the bunted kernel at the handling facility.

The boundaries of distinct definable areas are determined using the criteria in paragraphs (b) through (d) of § 301.89–3, which provide for the regulation of less than an entire State, the inclusion of noninfected acreage in a regulated area, and the temporary designation of nonregulated areas as regulated areas. Paragraph (c) of § 301.89–3 states that the Administrator may include noninfected acreage within a regulated area due to its proximity to an infestation or inseparability from the infected locality for regulatory purposes, as determined by:

- Projections of the spread of Karnal bunt along the periphery of the infestation;
- The availability of natural habitats and host materials within the noninfected acreage that are suitable for establishment and survival of Karnal bunt; and
- The necessity of including noninfected acreage within the regulated area in order to establish readily identifiable boundaries.

When we include noninfected acreage in a regulated area for one or more of the reasons previously listed, the noninfected acreage, along with the rest of the acreage in the regulated area, is intensively surveyed. Negative results from surveys of the noninfected acreage provide assurance that all infected acreage is within the regulated area. In effect, the noninfected acreage serves as a buffer zone between fields or areas affected with Karnal bunt and areas outside of the regulated area.

Under the regulations in § 301.89–3(f), a field known to have been infected with Karnal bunt, as well as any non-infected acreage surrounding the field, will be released from regulation if:

- The field is no longer being used for crop production; or
- Each year for a period of 5 consecutive years, the field is subjected to any one of the following management practices (the practice used may vary from year to year): (1) Planted with a cultivated non-host crop; (2) tilled once

annually; or (3) planted with a host crop that tests negative, through the absence of bunted kernels, for Karnal bunt.

The regulations in § 301.89–3(g) describe the boundaries of the regulated areas in Arizona, California, and Texas. In this interim rule, we are amending § 301.89–3(g) by removing certain areas in Arizona and Texas from the list of regulated areas, based on our determination that the fields in those areas are eligible for release from regulation under the criteria in § 301.89–3(f). This action relieves restrictions on fields within those areas that are no longer warranted.

Arizona

The list of regulated areas in Arizona includes individual fields and other distinct definable areas located in La Paz, Maricopa, and Pinal Counties. In this interim rule, we are removing two fields and the surrounding regulated acreage (a total of 26,256 acres) located in La Paz County, AZ. The fields had been designated as a regulated area because they were planted, in 1996, with seed that was potentially contaminated with Karnal bunt. We are now deregulating this portion of the regulated area because each year for a period of 5 consecutive years, the fields were subjected to at least one of the management practices described in § 301.89–3(f)(2).

Texas

The list of regulated areas in Texas includes distinct definable areas located in Archer, Baylor, Knox, McCulloch, San Saba, Throckmorton, and Young Counties. In this interim rule, we are modifying the boundaries for the regulated areas in McCulloch and San Saba Counties by removing one field in San Saba County and the surrounding regulated acreage, which falls in both counties (a total of 23,680 acres) from the list of regulated areas. This particular field had been designated as part of the regulated area in 1997 because it was found during survey to contain spores consistent with Karnal bunt. We are now deregulating this portion of the regulated area because each year for a period of 5 consecutive years, the field was subjected to at least one of the management practices described in § 301.89–3(f)(2).

Immediate Action

Immediate action is warranted to relieve restrictions on certain fields or areas that are no longer warranted. Under these circumstances, the Administrator has determined that prior notice and opportunity for public comment are contrary to the public interest and that there is good cause under 5 U.S.C. 553 for making this rule effective less than 30 days after publication in the **Federal Register**.

We will consider comments we receive during the comment period for this interim rule (see **DATES** above). After the comment period closes, we will publish another document in the **Federal Register**. The document will include a discussion of any comments we receive and any amendments we are making to the rule.

Executive Order 12866 and Regulatory Flexibility Act

This rule has been reviewed under Executive Order 12866. For this action, the Office of Management and Budget has waived its review under Executive Order 12866.

We are amending the Karnal bunt regulations to make changes to the list of areas or fields regulated because of Karnal bunt. We are removing certain areas in Arizona and Texas from the list of regulated areas based on our determination that the fields in those areas meet our criteria for release from regulation. This action is necessary to relieve restrictions that are no longer warranted.

The Regulatory Flexibility Act requires that agencies consider the economic effect of their rules on small entities. The entities most likely to be affected by this rule are producers of Karnal bunt host crops whose fields are being removed from the list of regulated areas and who plan to grow Karnal bunt host crops in the future.

Producers affected by this rule are likely to be classified as small entities based on the size standards set by the Small Business Administration (SBA), as well as data from the 1997 Census of Agriculture, which is the most recent census available. The SBA classifies wheat producers with total annual sales of less than $750,000 as small entities. According to the 1997 census data, there were a total of 6,135 farms in Arizona (this total includes, but is not limited to, wheat farms). Of the total number of farms in Arizona, 89 percent had annual sales of less than $500,000, well below the SBA's small entity threshold of $750,000 for wheat farms. Of the 194,301 farms in Texas, 98 percent are considered small entities according to SBA guidelines. Thus we expect that the farms affected by this rule will be small.

Producers whose fields are deregulated will benefit because they will be able to move wheat or other Karnal bunt host crops without restriction. Prior to this rule, any wheat, durum wheat, or triticale grown in those fields could be moved into or through a non-regulated area without restriction only if it first tested negative for bunted kernels. In addition, any wheat, durum wheat, or triticale grown in those fields could not be used as seed within or outside a regulated area unless it was tested and found free of bunted kernels and spores.

The impact of this rule on individual producers is not likely to be significant. The elimination of restrictions will increase marketing opportunities for producers, with impacts on prices those producers may set for their wheat, durum wheat, or triticale. Producers whose fields are deregulated may enjoy increased market opportunities for any wheat, durum wheat, or triticale they grow in the future (*e.g.,* the availability of export markets). They may also receive a higher commodity price for their wheat, durum wheat, or triticale, although any price changes would most likely be small.

Under these circumstances, the Administrator of the Animal and Plant Health Inspection Service has determined that this action will not have a significant economic impact on a substantial number of small entities.

Executive Order 12372

This program/activity is listed in the Catalog of Federal Domestic Assistance under No. 10.025 and is subject to Executive Order 12372, which requires intergovernmental consultation with State and local officials. (See 7 CFR part 3015, subpart V.)

Executive Order 12988

This rule has been reviewed under Executive Order 12988, Civil Justice Reform. This rule: (1) Preempts all State and local laws and regulations that are inconsistent with this rule; (2) has no retroactive effect; and (3) does not require administrative proceedings before parties may file suit in court challenging this rule.

Paperwork Reduction Act

This rule contains no new information collection or recordkeeping requirements under the Paperwork Reduction Act of 1995 (44 U.S.C. 3501 *et seq.*).

List of Subjects in 7 CFR Part 301

Agricultural commodities, Plant diseases and pests, Quarantine, Reporting and recordkeeping requirements, Transportation.

■ Accordingly, we are amending 7 CFR part 301 as follows:

PART 301—DOMESTIC QUARANTINE NOTICES

■ 1. The authority citation for part 301 continues to read as follows:

Authority: 7 U.S.C. 7701–7772; 7 CFR 2.22, 2.80, and 371.3.

Section 301.75–15 also issued under Sec. 204, Title II, Pub. L. 106–113, 113 Stat. 1501A–293; sections 301.75–15 and 301.75–16 also issued under Sec. 203, Title II, Pub. L. 106–224, 114 Stat. 400 (7 U.S.C. 1421 note).

■ 2. In § 301.89–3, paragraph (g) is amended as follows:

■ a. Under the heading ''Arizona,'' by revising the entry for La Paz County to read as set forth below.

■ b. Under the heading ''Texas,'' by revising the entry for McCulloch County to read as set forth below, and, in the entry for San Saba County, by revising paragraph (2) to read as set forth below.

§ 301.89–3 Regulated areas.

* * * * *

(g) * * *

Arizona

La Paz County. Beginning at the southeast corner of sec. 6, T. 7 N., R. 20 W.; then west to the southeast corner of sec. 35, T. 7 N., R. 21 W.; then south to the southeast corner of sec. 2, T. 6 N., R. 21 W; then west to the southeast corner of sec. 3, T. 6 N., R. 21 W.; then south to the southeast corner of sec. 15, T. 6 N., R. 21 W.; then west to the southwest corner of sec. 13, T. 6 N., R. 22 W., then north to the northwest corner of sec. 25, T. 7 N., R. 22 W.; then east to the southwest corner of sec. 19, T. 7 N., R. 21 W.; then north to the Colorado River; then northeast along the Colorado River to the north edge of sec. 32, T. 8 N., R. 21 W.; then east to the northeast corner of sec. 31, T. 8 N., R. 20 W.; then south to the point of beginning.

* * * * *

Texas

* * * * *

McCulloch County. Beginning at the intersection of the line of longitude −98.9975 and the line of latitude 31.2133 N.; then west along the line of latitude 31.2133 N. to the line of longitude 99.1818 W.; then north along the line of longitude 99.1818 W. to the line of latitude 31.3435 N.; then east along the line of latitude 31.3435 N. to the line of longitude −98.9975 W.; then south along the line of longitude -98.9975 W. to the point of beginning.

San Saba County. * * *

(2) Beginning at the intersection of the San Saba/McCulloch County line and the line of latitude 31.3440 N.; then east along the line of latitude 31.3440 N. to the line of longitude −98.9975 W.; then south along the line of longitude −98.9975 W. to the line of latitude 31.2141 N.; then west along the latitude 31.2141 N. to the San Saba/McCulloch County line; then north along the San Saba/McCulloch County line to the point of beginning.

Done in Washington, DC, this 12th day of May 2004.

Peter Fernandez,

Acting Administrator, Animal and Plant Health Inspection Service.

[FR Doc. 04–11086 Filed 5–14–04; 8:45 am]

BILLING CODE 3410–34–P

DEPARTMENT OF AGRICULTURE

Animal and Plant Health Inspection Service

9 CFR Parts 53 and 71

[Docket No. 02–091–1]

Spring Viremia of Carp; Payment of Indemnity

AGENCY: Animal and Plant Health Inspection Service, USDA.

ACTION: Interim rule and request for comments.

SUMMARY: We are amending our general indemnity regulations to provide for the payment of indemnity to owners for fish destroyed because of spring viremia of carp. Subject to available funding, the Department may pay eligible owners up to 50 percent of the fair market value for fish destroyed because of spring viremia of carp. In addition, expenses incurred in connection with any cleaning and disinfection required shall be shared according to the agreement between APHIS and the State in which the work is done. We are also amending our interstate movement regulations to prevent the movement of fish infected with or exposed to spring viremia of carp. These actions are necessary to help control and eradicate this disease in the United States.

DATES: This interim rule was effective May 12, 2004. We will consider all comments that we receive on or before July 16, 2004.

ADDRESSES: You may submit comments by any of the following methods:

- Postal Mail/Commercial Delivery: Please send four copies of your comment (an original and three copies) to Docket No. 02–091–1, Regulatory Analysis and Development, PPD, APHIS, Station 3C71, 4700 River Road Unit 118, Riverdale, MD 20737–1238. Please state that your comment refers to Docket No. 02–091–1.
- E-mail: Address your comment to *regulations@aphis.usda.gov.* Your comment must be contained in the body of your message; do not send attached files. Please include your name and address in your message and ''Docket No. 02–091–1'' on the subject line.
- Agency Web site: Go to *http://www.aphis.usda.gov/ppd/rad/cominst.html* for a form you can use to submit an e-mail comment through the APHIS Web site.
- Federal eRulemaking Portal: Go to *http://www.regulations.gov* and follow the instructions for locating this docket and submitting comments.

Reading Room: You may read any comments that we receive on this docket in our reading room. The reading room is located in room 1141 of the USDA South Building, 14th Street and Independence Avenue SW., Washington, DC. Normal reading room hours are 8 a.m. to 4:30 p.m., Monday through Friday, except holidays. To be sure someone is there to help you, please call (202) 690–2817 before coming.

Other Information: You may view APHIS documents published in the **Federal Register** and related information, including the names of groups and individuals who have commented on APHIS dockets, on the Internet at *http://www.aphis.usda.gov/ppd/rad/webrepor.html.*

FOR FURTHER INFORMATION CONTACT: Ms. Jill Rolland, Fishery Biologist, Certification and Control Team, VS, APHIS, 4700 River Road Unit 46, Riverdale, MD 20737–1231; (301) 734–8069.

SUPPLEMENTARY INFORMATION:

Background

The Animal and Plant Health Inspection Service (APHIS) of the United States Department of Agriculture (USDA or the Department) administers regulations at 9 CFR part 53 (referred to below as the regulations) that provide for the payment of indemnity to owners of animals that are required to be destroyed because of foot-and-mouth disease, pleuropneumonia, rinderpest, exotic Newcastle disease, highly pathogenic avian influenza, infectious salmon anemia, or any other communicable disease of livestock or poultry that, in the opinion of the Secretary of Agriculture, constitutes an emergency and threatens the U.S. livestock or poultry population. Payment for animals destroyed is based on the fair market value of the animals.

Section 53.2 of the regulations authorizes the APHIS Administrator to

cooperate with a State in the control and eradication of disease. Paragraph (b) of this section allows for the payment of indemnity to cover the costs for purchase, destruction, and disposition of animals and materials required to be destroyed because of being contaminated by or exposed to such disease.

Spring Viremia of Carp

Spring viremia of carp (SVC) is a foreign animal disease, caused by a rhabdovirus, that affects several cyprinid species, including goldfish and common carp, of which koi is a variety. SVC was first reported in Yugoslavia in 1969 and has since spread to other European countries, Russia, and the Middle East.

SVC is characterized as a listed disease by the Office of International des Epizooties (OIE). Characteristics of listed aquatic animal diseases include the following:

1. The disease has been shown to cause significant production losses due to morbidity or mortality at a national or multinational level where it occurs;
2. The disease has been shown to, or is strongly suspected to negatively affect wild aquatic animal populations that are shown to be an asset worth protecting;
3. The disease has the potential for international spread, including via live animals, their products, and inanimate objects.

If SVC is discovered in an OIE member country, the affected country must report the discovery to OIE, which will notify the 163 other member countries. As a result, SVC-free countries may cease importing any commodities that could potentially harbor the virus. Such trade restrictions would have a negative economic impact on the U.S. carp industry.

Evidence suggests that SVC can kill a very diverse group of species, including many representatives of the families that are dominant in North America. According to the OIE Aquatic Animal Health Code, susceptible host species for SVC are: common carp (*Cyprinus carpio*), grass carp (*Ctenopharyngodon idellus*), silver carp (*Hypophthalmichthys molitrix*), bighead carp (*Aristichthys nobilis*), crucian carp (*Carassius carassius*), goldfish (*Carassius auratus*), tench (*Tinca tinca*), and sheatfish (*Silurus glanis*). SVC is considered extremely contagious, and there are currently no U.S.-approved vaccines or treatments for the virus.

Transmission of the virus may occur through water contaminated with feces, urine or mucus from infected fish, and parasites such as leeches. SVC can survive for long periods of time in water and mud, increasing the possibility of transmission between sites by contaminated equipment. In addition, animals such as birds, which prey on SVC-susceptible species, often travel over very large areas and can transmit the disease between sites. The presence of SVC virus in ovarian fluid also suggests that the disease may be transmitted from parent to offspring as well. Some fish that recover from SVC can become non-clinical carriers of the virus. Non-clinical carriers of the virus can transmit the virus to other susceptible species, but do not show symptoms of SVC.

The disease flourishes in the spring as water temperatures increase, but maximum mortality occurs when temperatures are below 64 °F, since the immune resistance of carp rises as temperatures reach 68 °F. Once the disease is detected, depopulation is necessary given the disease's contagiousness and the possibility of non-clinical carriers that would not exhibit symptoms.

Clinical signs of SVC may be nonspecific and include darkening of the skin, exophthalmia (pop-eye), ascites (dropsy), pale gills, hemorrhages in the gills, skin, and eyes, and a protruding vent with a thick mucoid (white to yellowish) fecal cast. Pinpoint hemorrhages may occur in many organs and are considered an important indicator for SVC. Other internal symptoms include edema, inflammation of the intestine, and enlargement of the spleen. Concurrent infections often occur and may confuse the diagnosis. Mortality can be up to 70 percent in yearlings; adult fish are less affected by the disease.

In April 2002, a koi farm in North Carolina experienced an outbreak of SVC. The farm had sent a sample of the diseased koi to the Fish Disease Diagnostic Laboratories of the University of Arkansas at Pine Bluff, a USDA approved diagnostic laboratory. After a tentative positive diagnosis for SVC, the Arkansas labarotory forwarded the sample to the OIE reference laboratory for SVC in Weymouth, United Kingdom. The OIE laboratory confirmed the tentative diagnosis as positive for SVC on June 25, 2002. The SVC outbreak diagnosis was reported to APHIS, USDA on July 3, 2002.

The affected koi farm operates sites for hatching and resale in North Carolina and Virginia. Due to transfers of fish between sites, both of the farm's sites were considered infected with the SVC virus. SVC virus antibodies have been detected in native and nonnative fish both upstream and 12 miles downstream from the site of the initial outbreak in North Carolina. Additionally, SVC has emerged in populations of wild carp in Wisconsin and Illinois.

The States of North Carolina and Virginia took immediate steps to prevent further spread of SVC; however, the States lacked sufficient funding and personnel to effectively control and eradicate the disease, which poses a potentially serious threat to animal health and the U.S. economy. Therefore, State officials asked the USDA to assist with epidemiology, surveillance, and indemnification to respond to the presence of SVC.

On March 25, 2003, the Secretary of Agriculture authorized a transfer of funds within the Department in order to assist the States of North Carolina and Virginia with SVC-related epidemiology, surveillance, and indemnification. The Secretary authorized this transfer of funds after determining that SVC constitutes an emergency that threatens a segment of agricultural production in the United States. Under part 53 of the regulations, APHIS/USDA indemnified the owner of the affected sites in North Carolina and Virginia. The sites contained a total of 8 million koi and goldfish. Nearly all of those fish, with the exception of 15,000 that died previously from SVC and those that were lost due to bird predation, were depopulated to control the virus. Providing indemnity to the owner of the SVC-infected fish in North Carolina and Virginia to prevent further spread of SVC was an integral step in ensuring the disease's eradication.

APHIS Veterinary Services staff, in cooperation with State authorities in North Carolina and Virginia, have already implemented surveillance and biosecurity auditing measures to continue to monitor for SVC outbreaks. Further, APHIS officials have begun a nationwide surveillance program, within which many carp and bait fish producers are voluntarily participating in SVC testing. Continuing the surveillance program is essential to ensure eradication and/or control of SVC and to relieve foreign restrictions on U.S. trade related to SVC-susceptible species. To regain SVC-free status, the United States, an OIE member country, must test for SVC on farms that raise susceptible species. The tests typically include a sample of 150 SVC-susceptible fish and should take place in the spring and fall in environments where the disease flourishes (usually warm water). The member country must produce negative results for at least 2 years, after which foreign restrictions should be lifted.

We believe the virus can be controlled and contained within high-risk zones through continued surveillance and best management practices. Control of SVC requires depopulation of all ponds holding infected fish and disinfection of ponds, and associated equipment. Currently, carp producers are under no obligation to report the occurrence of SVC to APHIS. Through industry feedback, APHIS determined that farmers are less likely to report SVC outbreaks if they risk the loss of their entire carp stock without indemnification. Indemnification will provide an incentive for producers to report diseased fish and to continue testing for SVC, and therefore assist with USDA's goal of complete eradication in the U.S. carp industry.

Therefore, this interim rule amends the regulations in part 53 to provide for the payment of fish destroyed because of SVC. The specific amendments are discussed below.

Definitions

We have amended the definition of *disease* in § 53.1 to include SVC among the diseases listed.

Payment for Losses

The regulations in § 53.2 allow for payments by the Department for losses growing out of the destruction of animals affected with SVC. The Administrator may pay claims of up to 50 percent of eligible losses incurred by each producer resulting from the destruction of fish affected with the disease. Producers who collect salvage value for fish destroyed because of SVC will have that amount subtracted from the amount of eligible indemnity payments. In addition, expenses incurred in connection with any cleaning and disinfection required shall be shared according to the agreement between APHIS and the State in which the work is done.

By providing carp producers with indemnity, we can improve the probability of rapid reporting by producers, who are in a position to quickly report a disease situation. This enhances the likelihood of prompt control and eradication. In addition, such payments will benefit carp producers who could otherwise suffer uncompensated economic losses as a result of their participation in a control and eradication program.

Salvage Value

Paragraph (a) of § 53.4 directs operators to destroy animals affected by or exposed to disease promptly after appraisal and dispose of them by burial or burning, unless otherwise specifically provided by the Administrator. Because food fish infected with or exposed to SVC may retain salvage value if they are sold for processing or rendering, we are adding a provision to this section to allow for those options. Producers who collect salvage value for fish destroyed because of SVC will have that value subtracted from the amount of indemnity they are eligible to receive from APHIS under § 53.2(b) resulting from the destruction of fish affected with the disease.

Appraisal of Fish

Cyprinids are produced as food fish, bait fish, and ornamental fish. Carp produced for food or bait would be subject to the requirements of their appraisal classes to determine their fair market value based on their size. With regard to bait fish, smaller fish are more valuable. Fish produced for food, however, gain value as they grow larger. Such factors are commonly used to determine the fair market value of poultry, fish, and other livestock, as described in paragraph (b) of § 53.3. However, the primary type of carp currently affected by SVC are ornamental koi. These fish can carry significant breeding value, which is a valuation category already explicitly included in § 53.3(b). In the case of ornamental fish, their fair market value is determined using the following characteristics: (1) Conformation, which includes body size, shape, proportion and evidence or lack of deformities; (2) quality, which includes coloration, depth of color, tint, hue, and whiteness of background; (3) pattern of colors displayed; and (4) breed differences relating to buyer desire/interest. Again, these ornamental characteristics contribute to the breeding value of the fish; therefore, it is not necessary to amend paragraph (b) of § 53.3 to provide indemnity based on these characteristics.

Claims Not Allowed

Section 53.10 of the regulations lists reasons why the Administrator will disallow indemnity claims. We are adding provisions to the section to require claimants to follow certain precautions to avoid future SVC infection. Specifically, we are requiring that producers depopulate all infected and exposed fish on their farms under USDA or State supervision in order to ensure depopulation is conducted humanely and under optimal biosecurity conditions. Further, we are requiring producers to clean and disinfect affected premises and equipment under USDA or State supervision to ensure the cleaning and disinfection destroys all traces of SVC. We are also requiring that any restocking be done with fish that are certified SVC-free by a USDA–APHIS approved laboratory or in accordance with the diagnostic procedures described in Chapter 2.1.4 of the OIE Manual of Diagnostic Tests for Aquatic Animals, 2003 edition.[1]

Additionally, we are requiring that the producers demonstrate that their water source(s) are SVC-free. Producers can ensure this by using first-use spring water, spring water without fish, well water, ozone- or ultraviolet-treated surface water, or bore-hole water and by using a water source that is free of wild carp and any other SVC-susceptible species. Finally, we are requiring producers to demonstrate that no wild carp or any other wild SVC-susceptible species are able to migrate into their farming operations. We are confident that these measures will prevent the possibility of SVC reemerging on premises that receive indemnity because of an SVC outbreak.

Interstate Movement Restrictions

We are adding a new paragraph (d)(6) in § 71.3 to describe conditions governing the interstate movement of SVC-affected fish. Carp, especially ornamental varieties, are often shipped to other aquaculture farms or to consumers where they may come into contact with other farmed or wild fish. Therefore, preventing the interstate movement of SVC-affected fish is especially important to prevent the disease from spreading to other areas of the United States. SVC-affected fish being moved in interstate transport directly to a facility where they are to be processed into food for human consumption are exempt from this requirement.

Emergency Action

This rulemaking is necessary on an emergency basis to provide for the payment of indemnity to carp producers in the event that the ongoing nationwide surveillance program reveals additional SVC-affected areas. SVC is characterized as a listed disease by OIE and fits several criteria for this classification, including having a negative affect on wildlife populations that are shown to be an asset worth protecting and having the potential to spread internationally. SVC has been discovered on one fish farm in North Carolina and as a result, fish from that farm as well as an associated farm in Virginia, were depopulated. We will continue the

[1] *http://www.oie.int/eng/normes/fmanual/A_summry.htm*

nationwide surveillance program to ensure additional farms are not infected with SVC and to restore relationships with our trading partners. It is also essential to establish interstate movement prohibitions for SVC-affected fish.

Additional outbreaks of SVC may prove economically devastating for carp producers in the United States. Providing indemnity to the producers is instrumental in gaining their support for USDA's ongoing surveillance program, which is essential to ensuring early detection, control, and eradication of SVC. Under these circumstances, the Administrator has determined that prior notice and opportunity for public comment are contrary to the public interest and that there is good cause under 5 U.S.C. 553 for making this rule effective less than 30 days after publication in the **Federal Register**.

We will consider comments we receive during the comment period for this interim rule (see **DATES** above). After the comment period closes, we will publish another document in the **Federal Register**. The document will include a discussion of any comments we receive and any amendments we are making to the rule.

Executive Order 12866 and Regulatory Flexibility Act

This rule has been reviewed under Executive Order 12866. The rule has been determined to be not significant for the purposes of Executive Order 12866 and, therefore, has not been reviewed by the Office of Management and Budget.

We are amending our general indemnity regulations to allow the Department to pay indemnity to owners for fish destroyed because of SVC. Subject to available funding, the Department may pay eligible owners up to 50 percent of the fair market value for fish destroyed because of SVC. In addition, expenses incurred in connection with any cleaning and disinfection required shall be shared according to the agreement between APHIS and the State in which the work is done. These actions are necessary to help control and eradicate this disease in the United States. We are also amending our interstate movement regulations to prevent the movement of fish infected with or exposed to SVC.

Cyprinids are produced as food fish, ornamental fish, and bait fish. Overall, the United States is not a major world producer of SVC-susceptible species. In 2000, the U.S. produced 10,625 metric tons of carp, barbels, and other cyprinids, which was less than 0.1 percent of world production that year. There are little solid data available on this segment of the aquaculture industry. However, in 1998, the USDA conducted a census, the first of its kind, on the cyprinid industry. The survey's responses show that within the United States, 76 farms produced carp for food, 115 farms produced ornamental koi, 65 farms produced ornamental goldfish, and 34 farms produced baitfish. These numbers do not reveal the specific number of separate U.S. farms that produced each of the SVC-susceptible species in 1998, since some farms produced more than one species. In 1998, the United States exported live carp valued at $ 1.7 million.

Currently, SVC has been detected at only one commercial U.S. farm; that farm operates fish-producing sites in both North Carolina and Virginia. SVC virus antibodies were detected in native and nonnative wild fish both upstream and 12 miles downstream from the initial outbreak in North Carolina. Additionally, SVC has emerged in populations of wild carp in Wisconsin and Illinois. Unless SVC is eradicated or controlled, we believe that the disease could spread further in the United States aquaculture industry through normal interstate trade of farmed fish and associated products. Additionally, the presence of SVC in this country damages our trading relationships with other nations. Finally, further outbreaks of SVC also pose a risk to susceptible species of fish in the wild. Officials from the North Carolina Wildlife Commission have detected susceptible fish in the waters of west-central North Carolina; some of those fish, however, are not native to those waters. In order to prevent the further spread of SVC, indemnification is necessary.

The Regulatory Flexibility Act requires agencies to consider the economic effects of their rules on small entities. This rule has the potential to affect cyprinid farms, large and small.

We expect producers with SVC-infected or -exposed fish to benefit from this rule, because they will be eligible to receive indemnity payments for certain losses and costs resulting from SVC. Currently, those producers would suffer total losses, less any potential salvage value, if their stock were infected with SVC. Further, producers would have to carry the full costs of cleaning and disinfection. Under this rule, the Department may pay eligible owners up to 50 percent of the fair market value for fish destroyed because of SVC, subject to available funding. In addition, expenses incurred in connection with any cleaning and disinfection required shall be shared according to the agreement between APHIS and the State in which the work is done.

Affected producers, especially those that own small cyprinid operations, could see benefits, as described above, from this rule. However, the number of potentially affected producers, of any size, appears to be small; 273 operations in the United States raised SVC-susceptible species in 1998.[2] In 2004, APHIS identified 447 units producing SVC-susceptible species. Based on composite data for providers of the same and similar services, we assume that most of those cyprinid operations are considered small entities. Of the 110,580 U.S. farms engaged in animal aquaculture and other animal production[3] in 1997, 99 percent had sales of less than $500,000, well below the Small Business Administration's threshold of $750,000 for aquaculture operations. The number of aquaculture farms likely to be affected is unknown because SVC surveillance is ongoing. However, the portion of the aquaculture industry susceptible to SVC is approximately 2 to 5 percent.[4]

Under these circumstances, the Administrator of the Animal and Plant Health Inspection Service has determined that this action will not have a significant economic impact on a substantial number of small entities.

Executive Order 12372

This program/activity is listed in the Catalog of Federal Domestic Assistance under No. 10.025 and is subject to Executive Order 12372, which requires intergovernmental consultation with State and local officials. (See 7 CFR part 3015, subpart V.)

Executive Order 12988

This rule has been reviewed under Executive Order 12988, Civil Justice Reform. This rule: (1) Preempts all State and local laws and regulations that are in conflict with this rule; (2) has no retroactive effect; and (3) does not require administrative proceedings before parties may file suit in court challenging this rule.

Paperwork Reduction Act

This interim rule contains no new information collection or recordkeeping requirements under the Paperwork Reduction Act of 1995 (44 U.S.C. 3501 *et seq.*).

[2] Dr. John Green. ''Economic Risk in the U.S. Relating to the Fish Industry Susceptible to Spring Viremia of Carp.'' (3/10/04)

[3] Establishments primarily engaged in raising animals and insects, excluding cattle, hogs and pigs, poultry, sheep and goats, and animal aquaculture.

[4] See footnote 2.

List of Subjects

9 CFR Part 53

Animal diseases, Indemnity payments, Livestock, Poultry and poultry products.

9 CFR Part 71

Animal disease, Livestock, Poultry and poultry products, Quarantine, Reporting and recordkeeping requirements, Transportation.

■ Accordingly, we are amending 9 CFR parts 53 and 71 as follows:

PART 53—FOOT-AND-MOUTH DISEASE, PLEUROPNEUMONIA, RINDERPEST, AND CERTAIN OTHER COMMUNICABLE DISEASES OF LIVESTOCK OR POULTRY

■ 1. The authority citation for part 53 continues to read as follows:

Authority: 7 U.S.C. 8301–8317; 7 CFR 2.22, 2.80, and 371.4.

§ 53.1 [Amended]

■ 2. In § 53.1, the definition of *disease* is amended by adding the words ''spring viremia of carp,'' immediately after the word ''anemia,''.

§ 53.4 [Amended]

■ 3. In § 53.4, paragraph (a) is amended by adding the words ''spring viremia of carp or'' immediately before the word ''infectious''.

§ 53.10 [Amended]

■ 4. Section § 53.10 is amended by adding a new paragraph (f) to read as follows:

§ 53.10 Claims not allowed.

* * * * *

(f) The Department will not allow claims arising out of the destruction of fish due to spring viremia of carp (SVC) unless the claimants have done the following:

(1) Depopulated all SVC-infected and SVC-exposed fish on their property under the supervision of USDA or State officials;

(2) Thoroughly cleaned and disinfected all affected sites and all affected equipment under the supervision of USDA or State officials;

(3) If an affected site is to be restocked after cleaning and disinfection, the claimant must have done the following:

(i) Restocked with fish certified free of SVC by an APHIS-approved laboratory or in accordance with the diagnostic procedures described in the Office of International des Epizooties Manual of Diagnostic Tests For Aquatic Animals;

(ii) Demonstrated that their water sources are from first-use spring water, spring water without fish, well water, ozone or ultraviolet treated surface water, or bore-hole water and are free of wild carp and any other SVC-susceptible species; and

(iii) Prevented the migration of wild carp and any other wild SVC-susceptible species into their farming establishment.

* * * * *

PART 71—GENERAL PROVISIONS

■ 6. The authority citation for part 71 continues to read as follows:

Authority: 7 U.S.C. 8301–8317; 7 CFR 2.22, 2.80, and 371.4.

■ 7. Section 71.3 is amended by redesignating paragraph (d)(6) as paragraph (d)(7) and adding a new paragraph (d)(6) to read as follows:

§ 71.3 Interstate movement of diseased animals and poultry generally prohibited.

* * * * *

(d) * * *

(6) Fish affected with spring viremia of carp may be moved interstate only if they are being moved directly to a facility to be processed into food for human consumption.

* * * * *

Done in Washington, DC, this 12th day of May 2004.

Peter Fernandez,

Acting Administrator, Animal and Plant Health Inspection Service.

[FR Doc. 04–11085 Filed 5–14–04; 8:45 am]

BILLING CODE 3410–34–P

NATIONAL CREDIT UNION ADMINISTRATION

12 CFR Parts 701, 703, 709, 715, 723, and 725

Technical Corrections

AGENCY: National Credit Union Administration.

ACTION: Final rule.

SUMMARY: The National Credit Union Administration (NCUA) Board is issuing a final technical corrections rule. The rule corrects cross-references, updates references to NCUA publications, and makes minor typographic corrections.

DATES: This rule is effective May 17, 2004.

FOR FURTHER INFORMATION CONTACT: Paul Peterson, Staff Attorney, Division of Operations, Office of General Counsel, at the National Credit Union Administration, 1775 Duke Street, Alexandria, Virginia 22314–3428 or telephone: (703) 518–6540.

SUPPLEMENTARY INFORMATION:

A. Background

The Board has a policy of continually reviewing NCUA regulations to ''update, clarify and simplify existing regulations and eliminate redundant and unnecessary provisions.'' NCUA Interpretive Rulings and Policy Statement (IRPS) 87–2, Developing and Reviewing Government Regulations. The NCUA staff's most recent review of NCUA's regulations revealed the need for several minor updates and corrections.

Section 701.21(i)(4) currently states that Federal credit unions must account for financial options contracts transactions in accordance with the NCUA Accounting Manual for Credit Unions, but the current version of the Accounting Manual does not address financial options contracts accounting. 12 CFR 701.21(i)(4). Accordingly, the Board amends § 701.21(i)(4) to delete the reference to the Accounting Manual.

Section 703.1(b)(6) contains an incorrect reference to § 741.3(a)(3). The correct reference should be to § 741.3(a)(2). The Board amends § 703.1(b)(6) to make this correction.

Sections 709.1(c) and 725.18(c) contain incorrect references to §§ 700.1(j) and 700.1(k), respectively. The correct references should both be to § 700.2(e)(1). The Board amends §§ 709.1(c) and 725.18(c) to make this correction.

In § 715.3(a), the conjunction ''and'' that should be between the two subparagraphs (1) and (2) is incorrectly placed in the second subparagraph. The Board amends § 715.3(a) to correct this.

In the first sentence of § 723.20(b), the phrase ''members business loan rule'' should be ''member business loan rule.'' In § 723.21, the capitalization of ''Net Member Business Loan Balance'' should be changed to ''Net member business loan balance'' to make it consistent with the format of the other definitions in that section. The Board amends §§ 723.20(b) and 723.21 to make these changes.

B. Regulatory Procedures

Final Rule Under the Administrative Procedure Act

The amendments in this rule are technical rather than substantive. NCUA finds good cause that notice and public comment are unnecessary under sec. 553(b)(B) of the Administrative Procedure Act (APA), 5 U.S.C. 553(b)(B). NCUA also finds good cause to dispense with the 30-day delayed effective date requirement under sec. 553(d)(3) of the APA. The rule will,

therefore, be effective immediately upon publication of this notice.

Regulatory Flexibility Act

The Regulatory Flexibility Act requires NCUA to prepare an analysis to describe any significant economic impact a rule may have on a substantial number of small entities (those credit unions under ten million dollars in assets). This rule will not have a significant economic impact on a substantial number of small credit unions, and, therefore, a regulatory flexibility analysis is not required.

Paperwork Reduction Act

NCUA has determined that this rule will not increase paperwork requirements under the Paperwork Reduction Act of 1995 and regulations of the Office of Management and Budget.

Executive Order 13132

Executive Order 13132 encourages independent regulatory agencies to consider the impact of their actions on State and local interests. In adherence to fundamental federalism principles, NCUA, an independent regulatory agency as defined in 44 U.S.C. 3502(5), voluntarily complies with the executive order. This rule will not have substantial direct effects on the States, on the relationship between the national government and the States, or on the distribution of power and responsibilities among the various levels of government. NCUA has determined that this rule does not constitute a policy that has federalism implications for purposes of the executive order.

The Treasury and General Government Appropriations Act, 1999—Assessment of Federal Regulations and Policies on Families

The NCUA has determined that this rule will not affect family well-being within the meaning of section 654 of the Treasury and General Government Appropriations Act, 1999, Pub. L. 105–277, 112 Stat. 2681 (1998).

List of Subjects

12 CFR Part 701

Credit unions.

12 CFR Part 703

Credit unions, Investments.

12 CFR Part 709

Credit unions, Liquidations.

12 CFR Part 715

Audits, Credit unions, Supervisory committees.

12 CFR Part 723

Credit, Credit unions.

12 CFR Part 725

Credit unions, Liquidity.

By the National Credit Union Administration Board on May 11, 2004.

Becky Baker,

Secretary of the Board.

■ Accordingly, the NCUA amends 12 CFR parts 701, 703, 709, 715, and 725 as follows:

PART 701—ORGANIZATION AND OPERATION OF FEDERAL CREDIT UNIONS

■ 1. The authority citation for part 701 continues to read as follows:

Authority: 12 U.S.C. 1752(5), 1755, 1756, 1757, 1759, 1761a, 1761b, 1766, 1767, 1782, 1784, 1787, and 1789. Section 701.6 is also authorized by 31 U.S.C. 3717. Section 701.31 is also authorized by 15 U.S.C. 1601 *et seq.*, 42 U.S.C. 1861 and 42 U.S.C. 3601–3610. Section 701.35 is also authorized by 42 U.S.C. 4311–4312.

■ 2. Revise paragraph (i)(4) of § 701.21 as follows:

§ 701.21 Loans to members and lines of credit to members.

* * * * *

(i) * * *

(4) *Accounting.* A federal credit union must account for financial options contracts transactions in accordance with generally accepted accounting principles.

PART 703—INVESTMENT AND DEPOSIT ACTIVITIES

■ 3. The authority citation for part 703 continues to read as follows:

Authority: 12 U.S.C. 1757(7), 1757(8), 1757(15).

■ 4. Revise paragraph (b)(6) of § 703.1 as follows:

§ 703.1 Purpose and scope.

* * * * *

(b) * * *

(6) Investment activity by State-chartered credit unions, except as provided in § 741.3(a)(2) and § 741.219 of this chapter.

■ 5. Remove the last sentence of paragraph (a) of § 703.4.

PART 709—INVOLUNTARY LIQUIDATION OF FEDERAL CREDIT UNIONS AND ADJUDICATION OF CREDITOR CLAIMS INVOLVING FEDERALLY INSURED CREDIT UNIONS IN LIQUIDATION

■ 6. The authority citation for part 709 continues to read as follows:

Authority: 12 U.S.C. 1757, 1766, 1767, 1786(h), 1787, 1788, 1789, 1789a.

■ 7. Revise paragraph (c) of § 709.1 as follows:

§ 709.1 Definitions.

* * * * *

(c) *Insolvent* means insolvent as that term is defined in § 700.1(e)(1) of this chapter.

* * * * *

PART 715—SUPERVISORY COMMITTEE AUDITS AND VERIFICATIONS

■ 8. The authority citation for part 715 continues to read as follows:

Authority: 12 U.S.C. 1761(b), 1761d, 1782(a)(6).

■ 9. Revise paragraphs (a)(1) and (a)(2) of § 715.3 as follows:

§ 715.3 General responsibilities of the Supervisory Committee.

(a) * * *

(1) Meet required financial reporting objectives and

(2) Establish practices and procedures sufficient to safeguard members' assets.

* * * * *

PART 723—MEMBER BUSINESS LOANS

■ 10. The authority citation for part 723 continues to read as follows:

Authority: 12 U.S.C. 1756, 1757, 1757A, 1766, 1785, 1789.

■ 11. Revise the first sentence of paragraph (b) of § 723.20 as follows:

§ 723.20 How can a state supervisory authority develop and enforce a member business loan regulation?

* * * * *

(b) To receive NCUA's approval of a state's member business loan rule, the state supervisory authority must submit its rule to the NCUA regional office. * * *

* * * * *

■ 12. Revise the definition of ''Net Member Business Loan Balance'' in § 723.21 as follows:

§ 723.21 Definitions.

* * * * *

Net member business loan balance means the outstanding loan balance plus any unfunded commitments, reduced by any portion of the loan that is secured by shares in the credit union, or by shares or deposits in other financial institutions, or by a lien on the member's primary residence, or insured or guaranteed by any agency of the federal government, a state or any

political subdivision of such state, or subject to an advance commitment to purchase by any agency of the federal government, a state or any political subdivision of such state, or sold as a participation interest without recourse and qualifying for true sales accounting under generally accepted accounting principles.

* * * * *

PART 725—CENTRAL LIQUIDITY FACILITY

■ 13. The authority citation for part 725 continues to read as follows:

Authority: 12 U.S.C. 1795–1795f.

■ 14. Revise the first sentence of paragraph (c) of § 725.18 as follows:

§ 725.18 Creditworthiness.

* * * * *

(c) Specific characteristics of an uncreditworthy credit union include, but are not limited to, insolvency as defined by § 700.2(e)(1) of this chapter, unsatisfactory practices in extending credit, lower than desirable reserve levels, high expense ratio, failure to repay previous Facility advances as agreed, excessive dependence on borrowed funds, inadequate cash management policies and planning, or any other relevant characteristics creating a less than satisfactory condition. * * *

* * * * *

[FR Doc. 04–11180 Filed 5–14–04; 8:45 am]

BILLING CODE 7535–01–P

DEPARTMENT OF TRANSPORTATION

Federal Aviation Administration

14 CFR Part 39

[Docket No. 2001–NM–321–AD; Amendment 39–13633; AD 2004–10–03]

RIN 2120–AA64

Airworthiness Directives; Bombardier Model CL–600–2B19 (Regional Jet Series 100 & 440) Airplanes

AGENCY: Federal Aviation Administration, DOT.

ACTION: Final rule.

SUMMARY: This amendment adopts a new airworthiness directive (AD), applicable to certain Bombardier Model CL–600–2B19 (Regional Jet Series 100 & 440) airplanes, that requires repetitive inspections for cracking of the upper and lower web of the engine support beam between fuselage station (FS) 625 and FS 640, and repair if necessary. This AD also provides an optional terminating action for the repetitive inspections. This action is necessary to prevent failure of the engine support beam, a principal structural element, which could result in reduced structural integrity of the airplane. This action is intended to address the identified unsafe condition.

DATES: Effective June 21, 2004.

The incorporation by reference of a certain publication listed in the regulations is approved by the Director of the Federal Register as of June 21, 2004.

ADDRESSES: The service information referenced in this AD may be obtained from Bombardier, Inc., Canadair, Aerospace Group, P.O. Box 6087, Station Centre-ville, Montreal, Quebec H3C 3G9, Canada. This information may be examined at the Federal Aviation Administration (FAA), Transport Airplane Directorate, Rules Docket, 1601 Lind Avenue, SW., Renton, Washington; at the FAA, New York Aircraft Certification Office, 1600 Stewart Avenue, suite 410, Westbury, New York; or at the National Archives and Records Administration (NARA). For information on the availability of this material at NARA, call (202) 741–6030, or go to: *http://www.archives.gov/federal_register/code_of_federal_regulations/ibr_locations.html.*

FOR FURTHER INFORMATION CONTACT: James Delisio, Aerospace Engineer, Airframe and Propulsion Branch, ANE–171, FAA, New York Aircraft Certification Office, 1600 Stewart Avenue, suite 410, Westbury, New York 11590; telephone (516) 228–7321; fax (516) 794–5531.

SUPPLEMENTARY INFORMATION: A proposal to amend part 39 of the Federal Aviation Regulations (14 CFR part 39) to include an airworthiness directive (AD) that is applicable to certain Bombardier Model CL–600–2B19 (Regional Jet Series 100 & 440) airplanes was published in the **Federal Register** on October 31, 2003 (68 FR 62029). That action proposed to require repetitive inspections for cracking of the upper and lower web of the engine support beam (ESB) at fuselage station 640, and repair if necessary. That action also proposed to provide an optional terminating action for the repetitive inspections.

Comments

Interested persons have been afforded an opportunity to participate in the making of this amendment. The FAA has duly considered the comments received.

Request To Extend Compliance Time

One commenter requests that we extend the repetitive inspection interval from 740 flight cycles to 1,100 flight cycles. The commenter points out that Transport Canada Civil Aviation (TCCA), which is the airworthiness authority for Canada, has approved an alternative method of compliance (AMOC) for Canadian airworthiness directive CF–2001–26R1, dated September 20, 2002, which is the parallel airworthiness directive to this one. The AMOC to the Canadian airworthiness directive provides for repetitive inspections at an interval of 1,100 flight cycles.

We concur. We have coordinated this issue with TCCA, and they have confirmed that the AMOC referenced by the commenter was issued on November 20, 2002. TCCA also advises that, if Canadian airworthiness directive CF–2001–26R1 is revised in the future, the repetitive inspection interval will be extended to 1,100 flight cycles. In developing an appropriate compliance time for this AD, we considered TCCA's recommendation and the degree of urgency associated with the subject unsafe condition. In light of these factors, we find that a repetitive interval of 1,100 flight cycles represents an appropriate interval that will not compromise safety for affected airplanes. We have revised paragraph (b) of this AD accordingly.

Request To Clarify Area of Inspection

One commenter requests that we clarify the area subject to inspection per the proposed AD. The commenter notes that the proposed AD specifies external detailed inspection for cracking of the upper and lower web of the ESB at fuselage station (FS) 640. The commenter points out that the instructions in the service bulletin specify inspection of the area between FS 625 and FS 640.

We concur. We have revised the Summary section and paragraph (b) of this AD to clarify that the area subject to the inspections is between FS 625 and FS 640. We find that this change does not expand the scope of the proposed AD because the area between FS 625 and FS 640 is the subject area specified in the Accomplishment Instructions of Bombardier Alert Service Bulletin A601R–53–059, Revision 'D,' dated July 2, 2003, and we stated no intent in the proposed AD to differ from the referenced service bulletin in this regard.

Request To Give Credit for Previous Issues of the Service Bulletin

Two commenters request that we give credit for inspections and repairs accomplished previously per Bombardier Alert Service Bulletin A601R–53–059, Revision 'B,' dated August 6, 2002; or Revision 'C,' dated February 3, 2003. The commenters state that the instructions in these revisions of the service bulletin do not differ substantially from the instructions in Revision 'D' of the service bulletin, dated July 2, 2003, which the proposed AD refers to as the appropriate source of service information.

We concur and have added a new paragraph (a)(3) to this AD to give credit for actions accomplished before the effective date of this AD per Revision 'B' or 'C' of the service bulletin.

Request To Give Credit for Future Revisions of the Service Bulletin

One commenter requests that we give credit for any future revisions of Bombardier Alert Service Bulletin A601R–53–059. The commenter notes that this would eliminate the need for operators to apply for approval of an AMOC if the service bulletin is revised in the future.

We do not concur. We cannot approve use of revisions of a service document issued after publication of the AD because doing so would violate Office of the Federal Register (OFR) regulations for approval of materials ''incorporated by reference'' in rules. In general terms, we are required by these OFR regulations to either publish the service document contents as part of the actual AD language; or submit the service document to the OFR for approval as ''referenced'' material, in which case we may only refer to such material in the text of an AD. To allow operators to use later revisions of the referenced service bulletin, we must either revise the AD to reference specific later revisions, or operators must request approval to use later revisions as an AMOC under the provisions of paragraph (e) of this AD. We have not revised this AD in this regard.

Conclusion

After careful review of the available data, including the comments noted above, we have determined that air safety and the public interest require the adoption of the rule with the changes described previously. We have determined that these changes will neither increase the economic burden on any operator nor increase the scope of the AD.

Cost Impact

We estimate that 150 airplanes of U.S. registry will be affected by this AD. It will take approximately 1 work hour per airplane to accomplish the required inspection, at an average labor rate of $65 per work hour. Based on these figures, the cost impact of the required inspection on U.S. operators is estimated to be $9,750, or $65 per airplane, per inspection cycle.

The cost impact figure discussed above is based on assumptions that no operator has yet accomplished any of the requirements of this AD action, and that no operator would accomplish those actions in the future if this AD were not adopted. The cost impact figures discussed in AD rulemaking actions represent only the time necessary to perform the specific actions actually required by the AD. These figures typically do not include incidental costs, such as the time required to gain access and close up, planning time, or time necessitated by other administrative actions.

The optional terminating action, if done, would take approximately 290 work hours, at an average labor rate of $65 per work hour. Required parts would be provided by the manufacturer at no charge. Based on these figures, we estimate the cost of the optional terminating action to be $18,850 per airplane.

Regulatory Impact

The regulations adopted herein will not have a substantial direct effect on the States, on the relationship between the national government and the States, or on the distribution of power and responsibilities among the various levels of government. Therefore, it is determined that this final rule does not have federalism implications under Executive Order 13132.

For the reasons discussed above, I certify that this action (1) is not a ''significant regulatory action'' under Executive Order 12866; (2) is not a ''significant rule'' under DOT Regulatory Policies and Procedures (44 FR 11034, February 26, 1979); and (3) will not have a significant economic impact, positive or negative, on a substantial number of small entities under the criteria of the Regulatory Flexibility Act. A final evaluation has been prepared for this action and it is contained in the Rules Docket. A copy of it may be obtained from the Rules Docket at the location provided under the caption **ADDRESSES.**

List of Subjects in 14 CFR Part 39

Air transportation, Aircraft, Aviation safety, Incorporation by reference, Safety.

Adoption of the Amendment

■ Accordingly, pursuant to the authority delegated to me by the Administrator, the Federal Aviation Administration amends part 39 of the Federal Aviation Regulations (14 CFR part 39) as follows:

PART 39—AIRWORTHINESS DIRECTIVES

■ 1. The authority citation for part 39 continues to read as follows:

Authority: 49 U.S.C. 106(g), 40113, 44701.

§ 39.13 [Amended]

■ 2. Section 39.13 is amended by adding the following new airworthiness directive:

2004–10–03 Bombardier, Inc. (Formerly Canadair): Amendment 39–13633. Docket 2001–NM–321–AD.

Applicability: Model CL–600–2B19 (Regional Jet Series 100 & 440) airplanes; serial numbers 7003 through 7067 inclusive, and 7069 through 7782 inclusive; certificated in any category.

Compliance: Required as indicated, unless accomplished previously.

To prevent failure of the engine support beam (ESB), a principal structural element, which could result in reduced structural integrity of the airplane, accomplish the following:

Service Bulletin References

(a) The following information pertains to the service bulletin referenced in this AD:

(1) The term ''service bulletin'' as used in this AD, means the Accomplishment Instructions of Bombardier Alert Service Bulletin A601R–53–059, excluding Appendix A, Revision 'D,' dated July 2, 2003; and including Appendix B, dated August 6, 2002.

(2) Although the service bulletin specifies to complete a comment sheet related to service bulletin quality, a sheet recording compliance with the service bulletin, and an inspection results reporting form (located in Appendix A of the service bulletin), and submit this information to the manufacturer, this AD does not include such a requirement.

(3) Inspections and repairs accomplished before the effective date of this AD per Bombardier Alert Service Bulletin A601R–53–059, Revision 'B,' dated August 6, 2002; or Revision 'C,' dated February 3, 2003; are acceptable for compliance with the corresponding actions required by this AD.

Repetitive Inspections

(b) Perform an external detailed inspection for cracking of the upper and lower web of the ESB between fuselage station (FS) 625 and FS 640, according to Part A of the service bulletin. Do the initial inspection at the time specified in paragraph (b)(1), (b)(2), or (b)(3) of this AD, as applicable. Repeat the inspection thereafter at intervals not to exceed 1,100 flight cycles.

(1) For airplanes with 7,500 total flight cycles or less as of the effective date of this AD: Do the initial inspection prior to the accumulation of 8,000 total flight cycles.

(2) For airplanes with 7,501 total flight cycles or more, but 11,750 total flight cycles or less, as of the effective date of this AD: Do the initial inspection prior to the accumulation of 12,000 total flight cycles, or within 500 flight cycles after the effective date of this AD, whichever is first.

(3) For airplanes with 11,751 total flight cycles or more as of the effective date of this AD: Do the initial inspection within 250 flight cycles after the effective date of this AD.

Note 1: For the purposes of this AD, a detailed inspection is defined as: ''An intensive visual examination of a specific structural area, system, installation, or assembly to detect damage, failure, or irregularity. Available lighting is normally supplemented with a direct source of good lighting at intensity deemed appropriate by the inspector. Inspection aids such as mirror, magnifying lenses, etc., may be used. Surface cleaning and elaborate access procedures may be required.''

Repair

(c) If any crack is found during any inspection performed per paragraph (b) of this AD: Before further flight, repair per a method approved by either the Manager, New York Aircraft Certification Office (ACO), FAA; or Transport Canada Civil Aviation (or its delegated agent).

Optional Terminating Action

(d) Modification of the ESB by accomplishing all actions in paragraphs 2.D. and 2.E., and in steps (1) through (40) inclusive of paragraph 2.F., of the service bulletin (including an eddy current inspection for damage (*e.g.*, cracking) of the fastener holes in the flanges that attach the upper and lower forward angles to the upper and lower webs; and repair (oversizing the fastener holes to remove damage), if necessary) constitutes terminating action for the repetitive inspections required by paragraph (b) of this AD. Any required repair must be accomplished before further flight.

Alternative Methods of Compliance

(e) In accordance with 14 CFR 39.19, the Manager, New York ACO, is authorized to approve alternative methods of compliance for this AD.

Incorporation by Reference

(f) Unless otherwise specified in this AD, the actions shall be done in accordance with Bombardier Alert Service Bulletin A601R–53–059, excluding Appendix A, Revision 'D,' dated July 2, 2003, and including Appendix B, dated August 6, 2002; which includes the following effective pages:

Page No.	Revision level shown on page	Date shown on page
1–147	D	July 2, 2003.
Appendix B		
1–14	Original	August 6, 2002.

This incorporation by reference was approved by the Director of the Federal Register in accordance with 5 U.S.C. 552(a) and 1 CFR part 51. Copies may be obtained from Bombardier, Inc., Canadair, Aerospace Group, P.O. Box 6087, Station Centre-ville, Montreal, Quebec H3C 3G9, Canada. Copies may be inspected at the FAA, Transport Airplane Directorate, 1601 Lind Avenue, SW., Renton, Washington; at the FAA, New York Aircraft Certification Office, 1600 Stewart Avenue, suite 410, Westbury, New York; or at the National Archives and Records Administration (NARA). For information on the availability of this material at NARA, call (202) 741–6030, or go to: *http://www.archives.gov/federal_register/code_of_federal_regulations/ibr_locations.html.*

Note 2: The subject of this AD is addressed in Canadian airworthiness directive CF–2001–26R1, dated September 20, 2002.

Effective Date

(g) This amendment becomes effective on June 21, 2004.

Issued in Renton, Washington, on May 5, 2004.

Ali Bahrami,

Acting Manager, Transport Airplane Directorate, Aircraft Certification Service.

[FR Doc. 04–10740 Filed 5–14–04; 8:45 am]

BILLING CODE 4910–13–P

DEPARTMENT OF TRANSPORTATION

Federal Aviation Administration

14 CFR Part 39

[Docket No. 2003–NM–199–AD; Amendment 39–13634; AD 2004–10–04]

RIN 2120–AA64

Airworthiness Directives; Bombardier Model CL–215–6B11 (CL215T Variant), and CL–215–6B11 (CL415 Variant) Series Airplanes

AGENCY: Federal Aviation Administration, DOT.

ACTION: Final rule.

SUMMARY: This amendment supersedes an existing airworthiness directive (AD), applicable to certain Bombardier Model CL–215–6B11 series airplanes, that currently requires inspections to detect cracking in the rear engine mount struts, and replacement of struts with new struts, if necessary; and the eventual replacement of all struts with new struts. This amendment requires adding repetitive detailed inspections to detect cracking in the rear engine mount struts and replacement of struts with new struts, if necessary. This amendment also expands the applicability of the existing AD and makes the replacement of all struts with new, machined struts an optional terminating action for the repetitive inspections. The actions specified by this AD are intended to prevent failure of the rear engine mount struts, which could subsequently result in reduced structural integrity of the nacelle and engine support structure. This action is intended to address the identified unsafe condition.

DATES: Effective June 21, 2004.

The incorporation by reference of certain publications listed in the regulations is approved by the Director of the Federal Register as of June 21, 2004.

The incorporation by reference of Canadair Alert Service Bulletin 215–A3040, dated September 2, 1992, as listed in the regulations, was approved previously by the Director of the Federal Register as of April 4, 1994 (59 FR 10272, March 4, 1994).

ADDRESSES: The service information referenced in this AD may be obtained from Bombardier, Inc., Canadair, Aerospace Group, P.O. Box 6087, Station Centre-ville, Montreal, Quebec H3C 3G9, Canada. This information may be examined at the Federal Aviation Administration (FAA), Transport Airplane Directorate, Rules Docket, 1601 Lind Avenue, SW., Renton, Washington; at the FAA, New York Aircraft Certification Office, 1600 Stewart Avenue, suite 410, Westbury, New York; or at the National Archives and Records Administration (NARA). For information on the availability of this material at NARA, call 202–741–6030, or go to: *http://www.archives.gov/federal_register/code_of_federal_regulations/ibr_locations.html.*

FOR FURTHER INFORMATION CONTACT: David Lawson, Aerospace Engineer, Airframe and Propulsion Branch, ANE–171, FAA, New York Aircraft Certification Office, 1600 Stewart Avenue, Westbury, New York 11590; telephone (516) 228–7327; fax (516) 794–5531.

SUPPLEMENTARY INFORMATION: A proposal to amend part 39 of the Federal Aviation Regulations (14 CFR part 39) by superseding AD 94–04–02, amendment 39–8820 (59 FR 10272, March 4, 1994), which is applicable to certain Bombardier Model CL–215–6B11 series airplanes, was published in the **Federal Register** on February 13, 2004 (69 FR 7179). The action proposed

to continue to require inspections to detect cracking in the rear engine mount struts, and replacement of struts with new struts, if necessary; and the eventual replacement of all struts with new struts. The action also proposed to require adding repetitive detailed inspections to detect cracking in the rear engine mount struts and replacement of struts with new struts, if necessary. The action also proposed to expand the applicability of the existing AD and make the replacement of all struts with new, machined struts an optional terminating action for the repetitive inspections.

Comments

Interested persons have been afforded an opportunity to participate in the making of this amendment. No comments were submitted in response to the proposal or the FAA's determination of the cost to the public.

Explanation of Change to Cost Impact

The Cost Impact section of the proposed AD states that approximately 3 airplanes of U.S. registry would be affected by the proposed AD. Since the issuance of the proposed AD, we have determined that there are no airplanes currently on the U.S. Register that will be affected by this AD. We have revised the Cost Impact section of this final rule accordingly.

Conclusion

After careful review of the available data, the FAA has determined that air safety and the public interest require the adoption of the rule with the change previously described. The FAA has determined that this change will neither increase the economic burden on any operator nor increase the scope of the AD.

Cost Impact

Currently, there are no affected airplanes on the U.S. Register. However, if an affected airplane is imported and placed on the U.S. Register in the future, the costs stated below would apply.

The actions that are currently required by AD 94–04–02 would take about 10 work hours per airplane to accomplish, at an average labor rate of $65 per work hour. Required parts would be provided by the manufacturer at no cost to the operators. Based on these figures, we estimate that the cost impact of the currently required actions would be about $650 per airplane.

The new inspections that are required by this AD action would take about 3 work hours per airplane to accomplish, at an average labor rate of $65 per work hour. Based on these figures, the cost impact of these inspections would be about $195 per airplane, per inspection cycle.

Regulatory Impact

The regulations adopted herein will not have a substantial direct effect on the States, on the relationship between the national Government and the States, or on the distribution of power and responsibilities among the various levels of government. Therefore, it is determined that this final rule does not have federalism implications under Executive Order 13132.

For the reasons discussed above, I certify that this action (1) is not a ''significant regulatory action'' under Executive Order 12866; (2) is not a ''significant rule'' under DOT Regulatory Policies and Procedures (44 FR 11034, February 26, 1979); and (3) will not have a significant economic impact, positive or negative, on a substantial number of small entities under the criteria of the Regulatory Flexibility Act. A final evaluation has been prepared for this action and it is contained in the Rules Docket. A copy of it may be obtained from the Rules Docket at the location provided under the caption **ADDRESSES.**

List of Subjects in 14 CFR Part 39

Air transportation, Aircraft, Aviation safety, Incorporation by reference, Safety.

Adoption of the Amendment

■ Accordingly, pursuant to the authority delegated to me by the Administrator, the Federal Aviation Administration amends part 39 of the Federal Aviation Regulations (14 CFR part 39) as follows:

PART 39—AIRWORTHINESS DIRECTIVES

■ 1. The authority citation for part 39 continues to read as follows:

Authority: 49 U.S.C. 106(g), 40113, 44701.

§ 39.13 [Amended]

■ 2. Section 39.13 is amended by removing amendment 39–8820 (59 FR 10272, March 4, 1994), and by adding a new airworthiness directive (AD), amendment 39–13634, to read as follows:

2004–10–04 Bombardier, Inc. (Formerly Canadair): Amendment 39–13634. Docket 2003–NM–199–AD. Supersedes AD 94–04–02, Amendment 39–8820.

Applicability: Model CL–215–6B11 (CL215T Variant) series airplanes, serial numbers 1056, 1057, 1061, 1080, 1109, 1113 through 1122 inclusive, 1124, and 1125; and Model CL–215–6B11 (CL415 Variant) series airplanes, serial numbers 2001 through 2067 inclusive; certificated in any category.

Compliance: Required as indicated, unless accomplished previously.

To prevent failure of the rear engine mount struts, which could subsequently result in reduced structural integrity of the nacelle and engine support structure, accomplish the following:

Restatement of Requirements of AD 94–04–02

Inspection and Corrective Action

(a) For Model CL–215–6B11 series airplanes, serial numbers 1057, 1061, 1080, 1113 through 1115 inclusive, 1121, 1122, 1124, and 1125; turboprop versions only: Within 50 hours time-in-service after April 4, 1994 (the effective date of AD 94–04–02, amendment 39–8820), perform a visual inspection to detect cracking in the rear engine mount struts, part number (P/N) 87110016–003, in accordance with Canadair Alert Service Bulletin 215–A3040, dated September 2, 1992.

(1) If no cracking is detected, repeat the visual inspection thereafter at intervals not to exceed 50 hours time-in-service, until the requirements of paragraph (b) of this AD are accomplished.

(2) If any cracking is detected, prior to further flight, replace the engine rear mount strut with a new strut, P/N 87110016–009 or -011, in accordance with the service bulletin.

(b) For Model CL–215–6B11 series airplanes, serial numbers 1057, 1061, 1080, 1113 through 1115 inclusive, 1121, 1122, 1124, and 1125; turboprop versions only: Within 2 years after April 4, 1994, replace all engine rear mount struts with new struts, P/N 87110016–009 or -011, in accordance with Canadair Alert Service Bulletin 215-A3040, dated September 2, 1992. Such replacement constitutes terminating action for the inspections required by paragraph (a) of this AD.

(c) For Model CL–215–6B11 series airplanes, serial numbers 1057, 1061, 1080, 1113 through 1115 inclusive, 1121, 1122, 1124, and 1125; turboprop versions only: As of April 4, 1994, no person shall install a rear engine mount strut, P/N 87110016–003, on any airplane.

New Requirements of This AD

Inspection and Corrective Action

(d) For all airplanes: Within 50 flight hours after the effective date of this AD, perform a detailed inspection to detect cracking in the rear mount strut assemblies of the engines in accordance with Bombardier Alert Service Bulletin 215–A3111, Revision 2, dated January 23, 2003 (Model CL–215–6B11 (CL215T Variant) series airplanes); or Bombardier Alert Service Bulletin 215–A4287, Revision 2, dated January 23, 2003 (Model CL–215–6B11 (CL415 Variant) series airplanes); as applicable. Accomplishment of this detailed inspection constitutes terminating action for the requirements of paragraph (a) of this AD.

Note 1: For the purposes of this AD, a detailed inspection is defined as: ''An intensive visual examination of a specific structural area, system, installation, or assembly to detect damage, failure, or irregularity. Available lighting is normally

supplemented with a direct source of good lighting at intensity deemed appropriate by the inspector. Inspection aids such as mirror, magnifying lenses, etc., may be used. Surface cleaning and elaborate access procedures may be required.''

(1) If no cracking is detected, repeat the detailed inspection thereafter at intervals not to exceed 250 flight hours until the requirements of paragraph (e) of this AD are accomplished.

(2) If any crack is detected, before further flight, do the replacement in either paragraph (d)(2)(i) or (d)(2)(ii) of this AD in accordance with the applicable service bulletin.

(i) Replace the rear engine mount strut with a new, welded strut, P/N 87110016–009 or –011. Repeat the detailed inspection thereafter at intervals not to exceed 250 flight hours until the requirements of paragraph (e) of this AD are accomplished.

(ii) Replace the rear engine mount strut with a new, machined strut, P/N 87110047–001. Repeat the detailed inspection thereafter at intervals not to exceed 500 flight hours for the new, machined strut until the requirements of paragraph (e) of this AD are accomplished.

Optional Terminating Replacement

(e) Replace both rear engine mount struts with new, machined struts, P/N 87110047–001, in accordance with Bombardier Alert Service Bulletin 215–A3111, Revision 2, dated January 23, 2003 (Model CL–215–6B11 (CL215T Variant) series airplanes); or Bombardier Alert Service Bulletin 215–A4287, Revision 2, dated January 23, 2003 (Model CL–215–6B11 (CL415 Variant) series airplanes); as applicable. Replacement constitutes terminating action for the repetitive inspections required by this AD.

Parts Installation

(f) As of the effective date of this AD, no person shall install a rear engine mount strut, P/N 87110016–003, on any airplane.

Reporting Paragraph in Service Bulletins

(g) Although the service bulletins referenced in this AD specify to submit certain information to the manufacturer, this AD does not include such a requirement.

Alternative Methods of Compliance

(h) In accordance with 14 CFR 39.19, the Manager, New York Aircraft Certification Office (ACO), FAA, is authorized to approve alternative methods of compliance (AMOCs) for this AD.

Incorporation by Reference

(i) The actions shall be done in accordance with Canadair Alert Service Bulletin 215–A3040, dated September 2, 1992; Bombardier Alert Service Bulletin 215–A3111, Revision 2, dated January 23, 2003; and Bombardier Alert Service Bulletin 215–A4287, Revision 2, dated January 23, 2003; as applicable.

(1) The incorporation by reference of Bombardier Alert Service Bulletin 215–A3111, Revision 2, dated January 23, 2003; and Bombardier Alert Service Bulletin 215–A4287, Revision 2, dated January 23, 2003; is approved by the Director of the Federal Register, in accordance with 5 U.S.C. 552(a) and 1 CFR part 51.

(2) The incorporation by reference of Canadair Alert Service Bulletin 215–A3040, dated September 2, 1992, was approved previously by the Director of the Federal Register as of April 4, 1994 (59 FR 10272).

(3) Copies may be obtained from Bombardier, Inc., Canadair, Aerospace Group, P.O. Box 6087, Station Centre-ville, Montreal, Quebec H3C 3G9, Canada. Copies may be inspected at the FAA, Transport Airplane Directorate, 1601 Lind Avenue, SW., Renton, Washington; at the FAA, New York Aircraft Certification Office, 1600 Stewart Avenue, suite 410, Westbury, New York; or at the National Archives and Records Administration (NARA). For information on the availability of this material at NARA, call 202–741–6030, or go to: *http://www.archives.gov/federal_register/code_of_federal_regulations/ibr_locations.html.*

Note 2: The subject of this AD is addressed in Canadian airworthiness directive CF–2003–02, dated February 28, 2003.

Effective Date

(j) This amendment becomes effective on June 21, 2004.

Issued in Renton, Washington, on May 5, 2004.

Ali Bahrami,

Acting Manager, Transport Airplane Directorate, Aircraft Certification Service.

[FR Doc. 04–10739 Filed 5–14–04; 8:45 am]

BILLING CODE 4910–13–P

DEPARTMENT OF ENERGY

Federal Energy Regulatory Commission

18 CFR Part 381

[Docket No. RM04–8–000]

Annual Update of Filing Fees

May 11, 2004.

AGENCY: Federal Energy Regulatory Commission.

ACTION: Final rule; annual update of Commission filing fees.

SUMMARY: In accordance with 18 CFR 381.104, the Commission issues this update of its filing fees. This notice provides the yearly update using data in the Commission's Management, Administrative, and Payroll System to calculate the new fees. The purpose of updating is to adjust the fees on the basis of the Commission's costs for Fiscal Year 2003.

EFFECTIVE DATE: June 16, 2004.

FOR FURTHER INFORMATION CONTACT: Troy Cole, Office of the Executive Director, Federal Energy Regulatory Commission, 888 First Street, NE., Room 4R–01, Washington, DC 20426, 202–502–6161.

SUPPLEMENTARY INFORMATION: *Document Availability:* In addition to publishing the full text of this document in the **Federal Register**, the Commission provides all interested persons an opportunity to view and/or print the contents of this document via the Internet through FERC's Home Page (*http://www.ferc.gov*) and in FERC's Public Reference Room during normal business hours (8:30 a.m. to 5 p.m. eastern time) at 888 First Street, NE., Room 2A, Washington DC 20426.

From FERC's Web site on the Internet, this information is available in the eLibrary (formerly FERRIS). The full text of this document is available on eLibrary in PDF and Microsoft Word format for viewing, printing, and/or downloading. To access this document in eLibrary, type the docket number excluding the last three digits of this document in the docket number field and follow other directions on the search page.

User assistance is available for eLibrary and other aspects of FERC's website during normal business hours. For assistance, contact FERC Online Support at *FERCOnlineSupport@ferc.gov* or toll free at (866) 208–3676, or for TTY, contact (202) 502–8659.

The Federal Energy Regulatory Commission (Commission) is issuing this notice to update filing fees that the Commission assesses for specific services and benefits provided to identifiable beneficiaries. Pursuant to 18 CFR 381.104, the Commission is establishing updated fees on the basis of the Commission's Fiscal Year 2003 costs. The adjusted fees announced in this notice are effective June 16, 2004. The Commission has determined, with the concurrence of the Administrator of the Office of Information and Regulatory Affairs of the Office of Management and Budget, that this final rule is not a major rule within the meaning of section 251 of Subtitle E of Small Business Regulatory Enforcement Fairness Act, 5 U.S.C. 804(2). The Commission is submitting this final rule to both houses of the United States Congress and to the Comptroller General of the United States.

The new fee schedule is as follows:

Fees Applicable to the Natural Gas Policy Act

1. Petitions for rate approval pursuant to 18 CFR 284.123(b)(2). (18 CFR 381.403)—$9,500

Fees Applicable to General Activities

1. Petition for issuance of a declaratory order (except under Part I of the Federal Power Act). (18 CFR 381.302(a))—$19,090

2. Review of a Department of Energy remedial order:

Amount in Controversy

$0–9,999. (18 CFR 381.303(b))—$100

$10,000–29,999. (18 CFR 381.303(b))—$600

$30,000 or more. (18 CFR 381.303(a))—$27,860

3. Review of a Department of Energy denial of adjustment:

Amount in Controversy

$0–9,999. (18 CFR 381.304(b))—$100

$10,000–29,999. (18 CFR 381.304(b))—$600

$30,000 or more. (18 CFR 381.304(a))—$14,610

4. Written legal interpretations by the Office of General Counsel.

(18 CFR 381.305(a))—$5,470

Fees Applicable to Natural Gas Pipelines

1. Pipeline certificate applications pursuant to 18 CFR 284.224. (18 CFR 381.207(b))—$1,000 *

Fees Applicable to Cogenerators and Small Power Producers

1. Certification of qualifying status as a small power production facility. (18 CFR 381.505(a))—$16,410
2. Certification of qualifying status as a cogeneration facility. (18 CFR 381.505(a))—$18,580
3. Applications for exempt wholesale generator status. (18 CFR 381.801)—$840

List of Subjects in 18 CFR Part 381

Electric power plants, Electric utilities, Natural gas, Reporting and recordkeeping requirements.

Thomas R. Herlihy,
Executive Director.

■ In consideration of the foregoing, the Commission amends Part 381, Chapter I, Title 18, Code of Federal Regulations, as set forth below.

PART 381—FEES

■ 1. The authority citation for Part 381 continues to read as follows:

Authority: 15 U.S.C. 717–717w; 16 U.S.C. 791–828c, 2601–2645; 31 U.S.C. 9701; 42 U.S.C. 7101–7352; 49 U.S.C. 60502; 49 App. U.S.C. 1–85.

§ 381.302 [Amended]

■ 2. In 381.302, paragraph (a) is amended by removing ''$19,040'' and adding ''$19,090'' in its place.

* This fee has not been changed.

§ 381.303 [Amended]

■ 3. In 381.303, paragraph (a) is amended by removing ''$27,800'' and adding ''$27,860'' in its place.

§ 381.304 [Amended]

■ 4. In 381.304, paragraph (a) is amended by removing ''$14,580'' and adding ''$14,610'' in its place.

§ 381.305 [Amended]

■ 5. In 381.305, paragraph (a) is amended by removing ''$5,460'' and adding ''$5,470'' in its place.

§ 381.403 [Amended]

■ 6. Section 381.403 is amended by removing ''$9,480'' and adding ''$9,500'' in its place.

§ 381.505 [Amended]

■ 7. In 381.505, paragraph (a) is amended by removing ''$16,370'' and adding ''$16,410'' in its place and by removing ''$18,540'' and adding ''$18,580'' in its place.

§ 381.801 [Amended]

■ 8. Section 381.801 is amended by removing ''$870'' and adding ''$840'' in its place.

[FR Doc. 04–11052 Filed 5–14–04; 8:45 am]
BILLING CODE 6717–01–P

DEPARTMENT OF HOMELAND SECURITY

Coast Guard

33 CFR Part 117

[CGD05–03–168]

RIN 1625–AA09

Drawbridge Operation Regulation; Chincoteague Channel, Chincoteague, VA

AGENCY: Coast Guard, DHS.

ACTION: Final rule.

SUMMARY: The Commander, Fifth Coast Guard District, is changing the regulations that govern the operation of the SR 175 drawbridge across the Chincoteague Channel, mile 3.5, at Chincoteague, Virginia. These regulations are necessary to facilitate public safety during the Annual Pony Swim. This rule will change the drawbridge operation schedule by allowing the Chincoteague Channel Bridge to remain in the closed position from 7 a.m. to 5 p.m. on the last Wednesday and Thursday in July of every year.

DATES: This rule is effective June 16, 2004.

ADDRESSES: Comments and material received from the public, as well as documents indicated in this preamble as being available in the docket, are part of docket (CGD05–03–168) and are available for inspection or copying at Commander (obr), Fifth Coast Guard District, Federal Building, 4th Floor, 431 Crawford Street, Portsmouth, Virginia 23703–5004, between 8 a.m. and 4 p.m., Monday through Friday, except Federal holidays.

FOR FURTHER INFORMATION CONTACT: Linda L. Bonenberger, Bridge Management Specialist, Fifth Coast Guard District, at (757) 398–6227.

SUPPLEMENTARY INFORMATION:

Regulatory History

On January 13, 2004, we published a notice of proposed rulemaking (NPRM) entitled ''Drawbridge Operation Regulation; Chincoteague Channel, Chincoteague, VA'' in the **Federal Register** (69 FR 1958). We received no comments on the proposed rule. No public hearing was requested nor held.

Background and Purpose

The Town of Chincoteague requested a change from the current operating regulation set out in 33 CFR 117.5 that requires the drawbridge to open promptly and fully for the passage of vessels when a request to open is given.

The purpose of this rule is to accommodate the Pony Swim across the Assateague Channel between Assateague Island and Chincoteague Island that takes place every year on the last Wednesday and Thursday in July. The herd is owned by the Chincoteague Volunteer Fire Department and managed by the National Park Service. This annual event began in the 1700's, but in 1925 the Fire Department took over the event that is also referred to as the Chincoteague Volunteer Fireman's Carnival. The proceeds from the auctioning of the ponies provide a source of revenue for the fire company and it also serves to trim the herd's numbers. On Wednesdays, the ponies are led across the Assateague Channel from Assateague Island to Chincoteague where they are auctioned off. On Thursdays, the remaining ponies are led back across the channel to Assateague Island.

Due to the high volume of spectators that attend this yearly event, it is necessary to close the draw span on each of these days between the hours of 7 a.m. to 5 p.m. to reduce vehicular traffic congestion on this small island as a result of drawbridge openings.

This rule will require the Chincoteague Channel Bridge to remain

in the closed position each year from 7 a.m. to 5 p.m. on the last Wednesday and Thursday of July.

Since the Pony Swim is a well-known annual event, and is publicly advertised, vessel operators can arrange their transits to minimize any impact caused by the closure. Vessel operators with mast heights lower than 15 feet still can transit through the drawbridge across Chincoteague Channel during this event since only the bridge is closed and not the waterway. The Atlantic Ocean is the only alternate route for vessels with a mast height greater than 15 feet.

Discussion of Comments and Changes

The Coast Guard received no comments on the NPRM for the Chincoteague Channel Bridge and no changes are being made to this final rule.

Regulatory Evaluation

This rule is not a ''significant regulatory action'' under section 3(f) of Executive Order 12866, Regulatory Planning and Review, and does not require an assessment of potential costs and benefits under section 6(a)(3) of that Order. The Office of Management and Budget has not reviewed it under that Order. It is not ''significant'' under the regulatory policies and procedures of the Department of Homeland Security (DHS).

We expect the economic impact of this rule to be so minimal that a full Regulatory Evaluation under the regulatory policies and procedures of DHS is unnecessary.

This conclusion was based on the fact that this rule will have a very limited impact on maritime traffic transiting this area. Since the Chincoteague Channel will remain open to navigation during this event, mariners with mast height less than 15 feet may still transit through the bridge and vessels with mast heights greater than 15 feet can use the Atlantic Ocean to the west or transit after the closed hours.

Small Entities

Under the Regulatory Flexibility Act (5 U.S.C. 601–612), we have considered whether this rule would have a significant economic impact on a substantial number of small entities. The term ''small entities'' comprises small businesses, not-for-profit organizations that are independently owned and operated and are not dominant in their fields, and governmental jurisdictions with populations of less than 50,000.

The Coast Guard certifies under 5 U.S.C. 605(b) that this rule will not have a significant economic impact on a substantial number of small entities.

This rule will not have a significant economic impact on a substantial number of small entities because even though the rule closes the Chincoteague Channel bridge to mariners, those with mast heights less than 15 feet will still be able to transit through the bridge during the closed hours and mariners whose mast heights are greater than 15 feet will be able to use the Atlantic Ocean as an alternate route or transit after the closed hours.

Assistance for Small Entities

Under section 213(a) of the Small Business Regulatory Enforcement Fairness Act of 1966 (Pub. L. 104–121), we offered to assist small entities in understanding the rule so that they can better evaluate its effects on them and participate in the rulemaking process. In our notice of proposed rulemaking, we provided a point of contact to small entities who could answer questions concerning proposed provisions or options for compliance.

Collection of Information

This rule calls for no new collection of information under the Paperwork Reduction Act of 1995 (44 U.S.C. 3501–3520).

Federalism

A rule has implications for federalism under Executive Order 13132, Federalism, if it has a substantial direct effect on State or local governments and would either preempt State law or impose a substantial direct cost of compliance on them. We have analyzed this rule under that Order and have determined that it does not have implications for federalism.

Unfunded Mandates Reform Act

The Unfunded Mandates Reform Act of 1995 (2 U.S.C. 1531–1538) requires Federal agencies to assess the effects of their discretionary regulatory actions. In particular, the Act addresses actions that may result in the expenditure by a State, local, or tribal government, in the aggregate, or by the private sector of $100,000,000 or more in any one year. Though this rule will not result in such expenditure, we do discuss the effects of this rule elsewhere in this preamble.

Taking of Private Property

This rule would not affect a taking of private property or otherwise have taking implications under Executive Order 12630, Governmental Actions and Interference with Constitutionally Protected Property Rights.

Civil Justice Reform

This rule meets applicable standards in section 3(a) and 3(b)(2) of Executive Order 12988, Civil Justice Reform, to minimize litigation, eliminate ambiguity, and reduce burden.

Protection of Children

We have analyzed this rule under Executive Order 13045, Protection of Children from Environmental Health Risks and Safety Risks. This rule is not an economically significant rule and will not create an environmental risk to health or risk to safety that might disproportionately affect children.

Indian Tribal Governments

This rule does not have tribal implications under Executive Order 13175, Consultation and Coordination with Indian Tribal Governments, because it would not have a substantial direct effect on one or more Indian tribes, on the relationship between the Federal Government and Indian tribes, or on the distribution of power and responsibilities between the Federal Government and Indian tribes.

Energy Effects

We have analyzed this rule under Executive Order 13211, Actions Concerning Regulations That Significantly Affect Energy Supply, Distribution, or Use. We have determined that it is not a ''significant energy action'' under that order because it is not a ''significant regulatory action'' under Executive Order 12866 and is not likely to have a significant adverse effect on the supply, distribution, or use of energy. It has not been designated by the Administrator of the Office of Information and Regulatory Affairs as a significant energy action. Therefore, it does not require a Statement of Energy Effects under Executive Order 13211.

Environment

We have analyzed this rule under Commandant Instruction M16475.1D, which guides the Coast Guard in complying with the National Environmental Policy Act of 1969 (NEPA) (42 U.S.C. 4321–4370f), and have concluded that there are no factors in this case that would limit the use of a categorical exclusion under section 2.B.2 of the Instruction. Therefore, this rule is categorically excluded, under figure 2–1, paragraph (32) (e) of the Instruction, from further environmental documentation. Allowing the draw to remain closed for the brief times indicated on only the last Wednesday and Thursday of July of each year would have no individually or cumulatively significant impact on the environment.

List of Subjects in 33 CFR Part 117

Bridges.

Regulations

■ For the reasons discussed in the preamble, the Coast Guard amends 33 CFR part 117 as follows:

PART 117—DRAWBRIDGE OPERATION REGULATIONS

■ 1. The authority citation for part 117 continues to read as follows:

Authority: 33 U.S.C. 499, Department of Homeland Security Delegation No. 0170.1; 33 CFR 1.05–1(g); section 117.255 also issued under the authority of Pub. L. 102–587, 106 Stat. 5039.

■ 2. § 117.1005 is added to read as follows:

§ 117.1005 Chincoteague Channel

The draw of the SR 175 bridge, mile 3.5 at Chincoteague need not open for the passage of vessels from 7 a.m. to 5 p.m. on the last consecutive Wednesday and Thursday in July of every year.

Dated: May 5, 2004.

Ben R. Thomason, III,

Captain, U.S. Coast Guard, Acting Commander, Fifth Coast Guard District.

[FR Doc. 04–11150 Filed 5–14–04; 8:45 am]

BILLING CODE 4910–14–P

DEPARTMENT OF HOMELAND SECURITY

Coast Guard

33 CFR Part 165

[CGD09–04–009]

RIN 2115–AA00

Security Zone; Cleveland Harbor, Cleveland, OH

AGENCY: Coast Guard, DHS.

ACTION: Temporary final rule.

SUMMARY: The Coast Guard is establishing a temporary security zone in Cleveland's inner harbor for the Ninth District Commander's change of command ceremony. The security zone is necessary to ensure the security of dignitaries attending this ceremony on May 21, 2004. The security zone is intended to restrict vessels from a portion of Cleveland Harbor in Cleveland, Ohio.

DATES: This rule is effective from noon (local) until 3 p.m., May 21, 2004.

ADDRESSES: Comments and material received from the public, as well as documents indicated in this preamble as being available in the docket, are part of docket [CGD09–04–009] and are available for inspection or copying at the U.S. Coast Guard Marine Safety Office Cleveland, 1055 East Ninth Street, Cleveland, Ohio 44114, between the hours of 7:30 a.m. and 3:30 p.m., Monday through Friday, except Federal Holidays.

FOR FURTHER INFORMATION CONTACT: LT Allen Turner, U.S. Coast Guard Marine Safety Office Cleveland, at (216) 937–0128.

SUPPLEMENTARY INFORMATION:

Regulatory Information

We did not publish a notice of proposed rulemaking (NPRM) for this regulation. Under 5 U.S.C. 553(b)(B), the Coast Guard finds that good cause exists for not publishing an NPRM. The exact date of the event was not known with sufficient time to allow for the publication of an NPRM followed by an effective date before the event. Any delay in the effective date of the event could pose unnecessary risks to those dignitaries attending the event.

Background and Purpose

The security zone will encompass all waters of Cleveland Harbor south of a line drawn from the northeast corner of Voinovich Park (41°30′40.5″ N, 081°41′47.5″ W) to the northwest corner of Burke Lakefront Airport (41°30′48.5″ N, 081°41′37″ W). These coordinates are based upon North American Datum (NAD 1983).

Entry into, transit through, or anchoring within this security zone is prohibited unless authorized by the Captain of the Port Cleveland or his designated on-scene representative. The designated on-scene representative will be the Coast Guard Patrol Commander. The Coast Guard Patrol Commander may be contacted via VHF Channel 16.

Regulatory Evaluation

This rule is not a ''significant regulatory action'' under section 3(f) of Executive Order 12866, Regulatory Planning and Review, and does not require an assessment of potential costs and benefits under section 6(a)(3) of that Order. The Office of Management and Budget has not reviewed it under that Order. It is not ''significant'' under the regulatory policies and procedures of the Department of Homeland Security (DHS).

The security zone will only be in effect for a few hours on the day of the event and vessels may easily still transit inside the Cleveland Harbor breakwall.

Small Entities

Under the Regulatory Flexibility Act (5 U.S.C. 601–612), we have considered whether this rule would have a significant economic impact on a substantial number of small entities. The term ''small entities'' comprises small businesses, not-for-profit organizations that are independently owned and operated and are not dominant in their fields, and governmental jurisdictions with populations of less than 50,000.

The Coast Guard certifies under 5 U.S.C. 605(b) that this rule will not have a significant economic impact on a substantial number of small entities.

This rule will affect the following entities: The owners or operators of vessels intending to transit or anchor in this portion of Cleveland Harbor from noon (local) to 3 p.m. on May 21, 2004. This regulation will not have a significant economic impact for the following reasons. The regulation is only in effect for one day of the event. The designated area is being established to allow for maximum use of the waterway for commercial and recreational vessels. The Coast Guard will inform the public that the regulation is in effect via Marine Information Broadcasts.

Assistance for Small Entities

Under Section 213(a) of the Small Business Regulatory Enforcement Fairness Act of 1996 (Pub. L. 104–121), we offer to assist small entities in understanding the rule so that they can better evaluate its effects on them and participate in the rulemaking process. Small businesses may send comments on the actions of Federal employees who enforce, or otherwise determine compliance with, Federal regulations to the Small Business and Agriculture Regulatory Enforcement Ombudsman and the Regional Small Business Regulatory Fairness Boards. The Ombudsman evaluates these actions annually and rates each agency's responsiveness to small business. If you wish to comment on actions by employees of the U.S. Coast Guard, call 1–888–REG–FAIR (1–888–734–3247).

Collection of Information

This rule calls for no new collection of information under the Paperwork Reduction Act of 1995 (44 U.S.C. 3501–3520).

Federalism

We have analyzed this rule under Executive Order 13132, Federalism, and have determined that this rule does not have implications for federalism under that Order.

Unfunded Mandates Reform Act

The Unfunded Mandates Reform Act of 1995 (2 U.S.C. 1531–1538) requires Federal agencies to assess the effects of their discretionary regulatory actions. In particular, the Act addresses actions that may result in the expenditure by a State, local, or tribal government, in the aggregate, or by the private sector of $100,000,000 or more in any one year. Though this proposed rule would not result in such expenditure, we do discuss the effects of this rule elsewhere in this preamble.

Taking of Private Property

This rule will not affect a taking of private property or otherwise have taking implications under Executive Order 12630, Governmental Actions and Interference with Constitutionally Protected Property Rights.

Civil Justice Reform

This rule meets applicable standards in sections 3(a) and 3(b)(2) of Executive Order 12988, Civil Justice Reform, to minimize litigation, eliminate ambiguity, and reduce burden.

Protection of Children

The Coast Guard has analyzed this rule under Executive Order 13045, Protection of Children from Environmental Health Risks and Safety Risks. This rule is not an economically significant rule and does not create an environmental risk to health or risk to safety that may disproportionately affect children.

Energy Effects

We have analyzed this rule under Executive Order 13211, Actions Concerning Regulation That Significantly Affect Energy Supply, Distribution, or Use. We have determined that it is not a ''significant energy action'' under that order because it is not a ''significant regulatory action'' under Executive Order 12866 and is not likely to have a significant adverse effect on the supply, distribution, or use of energy. It has not been designated by the Administrator of the Office of Information and Regulatory Affairs as a significant energy action. Therefore, it does not require a Statement of Energy Effects under Executive Order 13211.

Indian Tribal Governments

This rule does not have tribal implications under Executive Order 13175, Consultation and Coordination with Indian Tribal Governments, because it does not have a substantial direct effect on one or more Indian tribes, on the relationship between the Federal Government and Indian tribes, or on the distribution of power and responsibilities between the Federal Government and Indian tribes.

Environment

We have considered the environmental impact of this rule and concluded that under figure 2–1, paragraph (34)(g), of Commandant Instruction M16475.1C, this rule is categorically excluded from further environmental documentation. A written categorical exclusion determination is available in the docket for inspection or copying where indicated under **ADDRESSES**.

List of Subjects in 33 CFR Part 165

Harbors, Marine Safety, Navigation (water), Reporting and record keeping requirements, Security measures, Waterways.

■ For the reasons set out in the preamble, the Coast Guard amends 33 CFR part 165 as follows:

PART 165—REGULATED NAVIGATION AREAS AND LIMITED ACCESS AREAS

■ 1. The authority citation for part 165 continues to read as follows:

Authority: 33 U.S.C. 1226, 1231; 46 U.S.C. Chapter 701; 50 U.S.C. 191, 195; 33 CFR 1.05–1(g), 6.04–1, 6.04–6, and 160.5; Pub. L. 107–295, 116 Stat. 2064; Department of Homeland Security Delegation No. 0170.1.

■ 2. A new temporary § 165.T09–009 is added to read as follows:

§ 165.T09–009 Security Zone; Cleveland Harbor, Cleveland, Ohio.

(a) *Location.* The following area is a security zone: All waters of Cleveland Harbor south of a line drawn from the northeast corner of Voinovich Park (41°30′40.5″ N, 081°41′47.5″ W) to the northwest corner of Burke Lakefront Airport (41°30′48.5″ N, 081°41′37″ W) (NAD 83).

(b) *Effective time and date.* This regulation is effective from noon (local) until 3 p.m. (local), on May 21, 2004.

(c) *Regulations.* Entry into, transit through, or anchoring within the security zone is prohibited unless authorized by the Captain of the Port Cleveland or the Coast Guard Patrol Commander.

Dated: April 20, 2004.

L.W. Thomas,

Commander, U.S. Coast Guard, Captain of the Port Cleveland.

[FR Doc. 04–11148 Filed 5–14–04; 8:45 am]

BILLING CODE 4910–15–P

ENVIRONMENTAL PROTECTION AGENCY

40 CFR Part 52

[CA 280–0444; FRL–7657–3]

Revisions to the California State Implementation Plan; San Joaquin Valley Unified Air Pollution Control District

AGENCY: Environmental Protection Agency (EPA).

ACTION: Final rule.

SUMMARY: EPA is finalizing approval of revisions to the San Joaquin Valley Unified Air Pollution Control District (SJVUAPCD or District) portion of the California State Implementation Plan (SIP). In the **Federal Register** on February 13, 2003, EPA proposed approval of revised SJVUAPCD Rules 2020 (permit exemptions) and 2201 (New Source Review or NSR for stationary sources). The rule revisions we are approving into the SIP address deficiencies identified in our July 19, 2001 limited approval and limited disapproval of the previous versions of these rules.

EFFECTIVE DATE: June 16, 2004.

ADDRESSES: You can inspect copies of the administrative record for this action at EPA's Region IX office during normal business hours by appointment. You can inspect copies of the submitted SIP revisions by appointment at the following locations:

Environmental Protection Agency, Region IX, 75 Hawthorne Street, San Francisco, CA 94105–3901.

Copies of the submitted Rules are also available for inspection at the following locations:

California Air Resources Board, Stationary Source Division, Rule Evaluation Section, 1001 ''I'' Street, Sacramento, CA 95814.

San Joaquin Valley Unified APCD, 1990 E. Gettysburg Avenue, Fresno, CA 93726.

A copy of the rules may also be available via the Internet at *http://www.arb.ca.gov/drdb/drdbltxt.htm.* Please be advised that this is not an EPA Web site and may not contain the same version of the rules that were submitted to EPA.

FOR FURTHER INFORMATION CONTACT: Ed Pike, Permits Office [AIR–3], Air Division, EPA Region IX, (415) 972–3970, *pike.ed@epa.gov.*

SUPPLEMENTARY INFORMATION: Throughout this document, ''we,'' ''us'' and ''our'' refer to EPA.

I. Background

On February 13, 2003 (68 FR 7330), EPA proposed to approve the following rules into the California SIP.

Local agency	Rule No.	Rule title	Adopted	Submitted
SJVUAPCD	2020	Exemptions	12/19/02	12/23/02
SJVUAPCD	2201	New and Modified Stationary Source Review Rule	12/19/02	12/23/02

We proposed to approve these rules because we determined that they addressed the deficiencies noted in our July 19, 2001 limited approval and limited disapproval of the previous versions of these rules (66 FR 37587) and otherwise complied with relevant Clean Air Act (CAA or Act) requirements. Our February 13, 2003, **Federal Register** notice of proposed rulemaking (NPRM) contains more information on the rules and our evaluation.

EPA's limited disapproval cited three deficiencies in the previous versions of Rules 2020 and 2201. First, EPA determined that the previous version of Rule 2201 was not approvable because its offset tracking equivalency system failed to contain a mandatory remedy. We also found the previous version of Rule 2201 deficient because section 4.5 of the rule exempted agricultural sources from permitting. Finally, we concluded the previous version of Rule 2020 was not approvable because it did not require all sources making modifications that result in a significant increase in emissions to meet the Lowest Achievable Emission Rate (LAER). For a more detailed discussion of these three rule deficiencies please see our July 19, 2001 final limited approval and limited disapproval at 66 FR 37587 and the accompanying Technical Support Document dated August 30, 1999 (''1999 TSD'').

EPA's July 2001 limited disapproval informed the District that the following actions were required to correct the rule deficiencies:

1. The District must revise Rule 2201 to provide a mandatory, enforceable and automatic remedy to cure any annual shortfall and, in the future, prevent shortfalls in the District's New Source Review Offset Equivalency Tracking System.

2. The District must remove the agricultural exemption from Rule 2020.

3. The District must revise Rule 2201 to ensure that all sources meet LAER [1] if they are allowed to make a significant increase in their actual emissions rate. See 66 FR 37590. The District has addressed each of these deficiencies.

The District revised Rule 2201 to clarify and expand the requirements for tracking the equivalency of the District's NSR offset requirements to the federal NSR program offset requirements. The revised District rule includes specific and automatic remedies to address any shortfall found by the tracking system or any failure to implement the tracking system. The revisions to section 7.0 of Rule 2201 reasonably satisfy EPA's requirement for mandatory, enforceable and automatic remedies to address any shortfalls and prevent future ones.

To address the deficiency in Rule 2020, the District deleted the previous permit exemption for agricultural sources. We note that the State has also removed a similar blanket exemption, thereby providing the District with authority to require air permits for agricultural sources, including federally required NSR permits.[2]

Finally, the District revised Rule 2201 to require LAER for all modifications considered major under federal regulations. Sections 3.24 and 4.1.3 provide that any major modification, as defined in the federal regulations in 40 CFR 51.165, must meet LAER. We conclude this revision reasonably addresses the noted deficiency.

II. Public Comments and EPA Responses

EPA's proposed action provided a 30-day public comment period. During this period, we received comments from the following parties.

1. Seyed Sadredin, SJVUAPCD; letter dated March 13, 2003.

2. Caroline Farrell, Center on Race, Poverty & the Environment, on behalf of the Association of Irritated Residents (AIR); letter dated March 17, 2003.

3. David Farabee, Pillsbury Winthrop, LLP, on behalf of the Western States Petroleum Association (WSPA); letter dated March 17, 2003.[3]

4. Ann Harper, Earthjustice; letter dated March 17, 2003.

These comments and our responses are summarized below.

The District and WSPA support approval of the revised rules into the SIP, but argue that EPA should revise or clarify various preamble statements, in particular those regarding the creditability of certain ''pre-1990'' Emission Reductions Credits.[4] Earthjustice and AIR oppose approval of Rule 2201 for the reasons described below.

In addition to these comments, EPA received four other letters related to the proposed action after the close of the comment period:

1. Paul Fanelli, Manufacturers Council of the Central Valley (MCCV); letter dated March 21, 2003. This letter is addressed to the Regional Administrator and does not specifically comment on the proposed approval notice. The letter instead notes that ''The MCCV has been advised that the EPA Region IX staff has formulated policy regarding pre-1990 Emission Reduction Credits (ERC's)'' and raises concerns with such policy formulation.

2. Joe Neves, Kings County Board of Supervisors; letter dated April 2, 2003. The letter echoes concerns raised by the District regarding the treatment of pre-1990 Emission Reduction Credits.

[1] Many California Districts use the term ''Best Available Control Technology'' (BACT) with a definition equivalent to LAER. Please see the 1999 TSD for additional information on the District's definition of BACT.

[2] On September 22, 2003, the Governor signed SB700 into law. The legislation includes an amendment to California Health & Safety Code section 42310 to delete the previous permit exemption for agricultural sources.

[3] We also received an e-mail on March 14, 2003 from Cathy Reheis-Boyd, Acting President of WSPA, asking EPA to consider incorporating language into the final notice that indicates a willingness to work with the District to develop a flexible tracking system that accounts for all differences between the local and federal permitting systems. We do not understand this to be a comment on the decision to approve the District's rule or a suggestion that the tracking system fails to accurately account for the various differences between the local and federal programs. We agree, however, that, should the District choose to revise its tracking system provisions, it will be important for EPA to continue to work with the District to ensure the system accurately accounts for these differences.

[4] These are emissions reductions banked as credits before the 1990 Clean Air Act Amendments. This notice uses the term ''pre-baseline'' emission reduction credits to clarify that the issue is tied not solely to the 1990 date, but the date that an area uses as its emissions inventory baseline date.

3. L.W. Clark, Independent Oil Producers' Agency (IOPA), letter dated April 22, 2003. IOPA argues pre-1990 emission reduction credits should not be discounted in any equivalency demonstration.

4. Harley Pinson, Occidental of Elk Hills (Oxy); letter dated July 1, 2003. Oxy notes in its letter that it previously submitted comments regarding the proposed rule in its capacity as a member of WSPA, but adds that it would like to reiterate some of the concerns raised by WSPA, the District and others.

We have not prepared separate responses to these late comments. Our responses to the timely comments sufficiently address their concerns.

A. General Equivalency Tracking System Issues

Comment 1: WSPA expresses concern that sources in compliance with District Rules 2020 and 2201 may not comply with federal offset requirements because EPA noted that sources should ''ensure that the emission reductions used to satisfy offset requirements meet federal creditability criteria.'' WSPA writes that this statement suggests sources that comply with Rule 2201 may still not meet pertinent federal offset requirements. WSPA urges EPA to clarify that compliance with the District's SIP-approved NSR rule satisfies federal offset requirements and that a separate federal emission reduction creditability analysis is not necessary.

Response: EPA agrees that a source that complies with the applicable District SIP-approved NSR rule would be in compliance with the provisions of the Clean Air Act that the District SIP rule implements. As EPA explained in the NPRM, with the exception of the requirement to determine the surplus value of emission reduction credits at the time of use, the District rule applies the same criteria for determining the creditability of such emission reduction credits as the CAA. *See* 68 FR 7333. As a result, sources must continue to meet CAA creditability requirements as incorporated in sections 4.5 and 3.2.1 of Rule 2201. The equivalency demonstration in Rule 2201 provides some flexibility regarding surplus adjusting but the rule does not otherwise exempt sources from obtaining creditable emission reduction credits to meet offset requirements. Once these other requirements are met, nothing in section 7.1.5 requires the District to withdraw a permit issued in reliance on an emission reduction credit that is of lesser surplus value at the time of use under federal criteria.[5] Rule 2201 allows such credits to be used as long as equivalency is demonstrated annually.[6] Should the District allow too many non-surplus emission reductions to be used as offsets, the remedy is outlined in section 7.4. The District will retire additional creditable reductions that have not been used as offsets and have been banked or generated as a result of enforceable permitting actions. If a deficit remains, the District must implement the requirements specified in the federal rules.

Comment 2: WSPA disagrees with EPA's determination that the offset equivalency tracking system only covers permits for sources with authority to construct (ATC) applications deemed complete on or after August 20, 2001. WSPA argues that because EPA granted limited approval to a prior version of the tracking system in its July 19, 2001 final action, EPA cannot rely on the fact that it subsequently required additional changes to the tracking system to exclude sources covered by ATC applications deemed complete before August 20, 2001. EPA should clarify that even sources that have permit applications deemed complete before August 20, 2001 should be treated as covered by the District's tracking system.

Response: Section 7.3.1 of District Rule 2201 limits the scope of the tracking system to ''new and modified sources for which a complete application for Authority to Construct was submitted after August 20, 2001.'' This date aligns with the effective date of EPA's July 19, 2001 limited approval and limited disapproval of the previous version of Rule 2201. Prior to August 20, 2001, the SIP required offsets but did not include a requirement to track and demonstrate offset equivalency. The rule being approved into the SIP today clearly specifies the period covered by Rule 2201. Whether we use the effective date of the prior approval or the terms of the current rule, we would still limit allowances for non-surplus credits under the equivalency tracking system to sources submitting ATCs after August 20, 2001 unless the District changes the rule to include these sources in the tracking system.

Comment 3: WSPA notes that EPA has concluded that the District may not rely on the application of LAER requirements to newly constructed federal minor sources for purposes of demonstrating equivalency with federal NSR requirements because the District's LAER rules do not require these minor sources to make actual emission reductions. WSPA observes that despite this finding, the District's rules result in emissions from new minor sources that are substantially lower than would be the case under federal NSR requirements. WSPA also observes that in certain cases, the District's NSR program does reduce actual emissions from sources that are not major under federal NSR. WSPA encourages EPA to work with the District to assess further approaches for evaluating the overall effectiveness of the District's NSR rules as compared to federal NSR requirements.

Response: EPA will continue to work with the District to assess where more stringent District requirements result in actual emission reductions that may be used to compensate for any less stringent offset requirements. It is important to reiterate, however, that the exercise is to demonstrate that the District achieves real reductions in the inventory of emissions through requirements more stringent than the Act's. For this reason, construction of a new source, even if it adds fewer new emissions than might occur in other areas, does not reduce real emissions from the air and the baseline inventory. The purpose of the tracking system is not to make creditable certain actions that do not otherwise qualify as offsets, such as avoided possible emission increases. CAA section 173(c)(2) requires that offsets be reductions in ''actual emissions.'' As commenter notes, there may be examples where actual reductions of emissions in the air and in the inventory do occur and we will assess these examples with the District.

Comment 4: WSPA notes that the equivalency tracking program requires the District to demonstrate equivalency with the federal NSR rules in effect on November 14, 2002. See Rule 2201, section 7.1.1. WSPA observes that

[5] The District's rule provides for EPA review of the District's creditability determinations not for purposes of reviewing whether individual permitting decision rely on ERCs that are not surplus at the time-of-use, but to ensure the District's *program* satisfies the offset requirements of the Act. Accordingly, section 7.1.5 of District Rule 2201 provides that EPA may review the District's creditability determination to ensure that the emission reductions are ''real, surplus, quantifiable, enforceable, and permanent.''

[6] We explained our understanding of the District's rule in our testimony before the California Energy Commission regarding the offsets relied upon in the NSR permit for Calpine's San Joaquin Valley Energy Center. We noted that the District rule allowed Calpine to rely on credits considered acceptable under the District rules but that would be non-surplus under the federal rules. We added that the District would need to address any shortfall that resulted in the creditable emission reductions needed to satisfy the Clean Air Act offset requirements. A copy of this testimony has been added to the administrative record for today's action.

newly promulgated federal NSR Reform rules took effect on March 3, 2003 and urges EPA to work promptly with the District to incorporate the new federal NSR rules into the equivalency demonstration requirement.

Response: On December 31, 2002, EPA finalized revisions to the federal NSR rules (''NSR Reform''). 67 FR 80186. Pursuant to the revised rules in 40 CFR 51.165, permitting agencies revising their rules to meet NSR Reform must adopt and submit such revisions to EPA by January 2, 2006. As suggested by the comment, EPA is working with the District to determine how the District will implement NSR Reform, although the rule does not provide for establishing a different deadline for the District.

Comment 5: WSPA encourages EPA to continue to work with the District to develop alternative NSR rules that demonstrate equivalency with federal offset requirements, while accounting for the unique characteristics of the District's permitting system. WSPA also suggests that more flexible approaches to satisfying federal offset requirements may be appropriate in other jurisdictions and encourages EPA to consider alternative approaches in other states and air districts.

Response: EPA acknowledges WSPA's support for alternative approaches to satisfying federal emissions offset requirements and will consider submissions from other jurisdictions on a case-by-case basis.

B. Determination of Surplus Value of Credits

Comment 6: WSPA agrees that creditable emission reductions must be surplus when created and either used immediately to offset emissions or banked for later use. However, WSPA argues that nothing in the Clean Air Act or EPA regulations requires banked emission reduction credits to be surplus at the time of use. WSPA suggests that EPA revisit its position on the treatment of credits banked for later use in order to assure that the District's banking program remains effective.

Response: We disagree with WSPA's assertion that the Clean Air Act does not require emission reduction credits to be surplus at time of use. The surplus requirement derives from CAA section 173(c)(2), which provides, ''Emission reductions otherwise required by this Act shall not be creditable as emissions reductions for purposes of any such offset requirement.'' We believe the provision, by focusing on emission reductions ''for purposes'' of the offset requirement, is clear that the creditability of an emission reduction is to be determined at the time it is used as an offset. *See* also CAA § 173(a)(1)(A) (requiring ''actual'' emission reductions equal to the total tonnage of increase at the time construction is commenced). Even if we found this language ambiguous, however, the most reasonable interpretation is to reconcile creditability, including the surplus value, no earlier than at the time of use when the permitting agency formally determines that an applicant meets Clean Air Act requirements for an authority to construct permit. WSPA's interpretation that emission reduction credits retain their value for all time is inconsistent with the purposes of section 173(c)(2) and related requirements of Part D of Title I of the Act that require continuing air pollution reductions in nonattainment areas.

For example, one of the purposes of this requirement is to ensure that offsets are real reductions in the area's emissions inventory. Without ''surplus adjusting'' at time of use, there is no assurance that emissions reductions have not already been counted in the area's plan as a decrease in the inventory. If a reduction is otherwise required by a subsequently adopted rule, the reduction is typically included in the emissions reduction benefits of the rule incorporated into the SIP. This inconsistency with the requirement for reasonable further progress is one reason why EPA believes the ''surplus-at-time-of-use'' requirement is consistent with the goals of the Act.

WSPA's reading of the surplus requirement of section 173(c)(2) would diminish it to a mere timing provision with no broader air quality protection function. WSPA's interpretation would mean that sources making emission reductions that they know will be required would be able to use these emission reduction credits for all time as long as they are made before officially required. Sources would be motivated to make these ''early'' reductions in order to preserve these emissions for future use. If such a ''loophole'' in section 173(c)(2) did exist, the result would be that the emission reduction benefits of many CAA requirements such as Reasonably Available Control Technology (RACT) for existing sources would be lost because the reductions could be used to allow increases in emissions at the same source or other sources. This is not a reasonable interpretation of section 173(c)(2). A more reasonable interpretation is that Congress established section 173(c)(2) at least in part to preserve the benefits of other CAA requirements and that creditability must instead be determined when a stationary source uses a credit to meet offset requirements.

C. Enforceability of Equivalency Tracking System

Comment 7: AIR contends that EPA should not approve Rules 2020 and 2201 because the District's revised rules remain unenforceable. AIR urges EPA to consider the District's past failure to meet statutory or regulatory reporting deadlines before relying on the District's commitment to submit annual offset equivalency demonstration reports. Accordingly, AIR recommends that EPA reject any remedy hinging on the District's compliance with reporting requirements. Likewise, Earthjustice contends that EPA's reliance on the District's promise of compliance is unjustified and unreasonable in light of the District's history of noncompliance with the CAA.

Response: EPA agrees that the District's NSR program must generate real, enforceable reductions in emissions that meet all EPA creditability requirements. Accordingly, EPA's July 19, 2001 limited approval of Rules 2020 and 2201 directed the District to include in the Rule 2201 offset equivalency tracking system ''a mandatory and enforceable remedy to cure any annual shortfall and prevent future shortfalls.'' 66 FR 37587. EPA believes the District's revised Rule 2201 addresses this concern. Section 7.4.1 of Rule 2201 establishes two remedies that would take effect if the District fails to demonstrate equivalency with federal NSR offset requirements. First, the District will retire any unused emission reduction credits that meet federal creditability criteria to make up for any shortfall in the amount of federal creditable emission reductions required. Rule 2201, section 7.4.1.1. If the shortfall persists after the District retires unused federally creditable emission reduction credits, the District must also apply federal offset requirements to all permits issued after the annual demonstration deadline. Rule 2201, section 7.4.1.2. As we stated in our NPRM, EPA has determined that these remedies satisfy the concerns raised in our July 19, 2001 limited approval of Rule 2201.

While EPA acknowledges AIR's concern regarding the possible failure to meet reporting deadlines, we believe the current rules provide adequate remedies for any possible noncompliance. For example, section 7.4.1.1 of Rule 2201 specifies that if EPA determines that the District's demonstration is erroneous, the mandatory and enforceable remedies discussed in the preceding paragraph will automatically be imposed. In

addition, section 7.4.2.3 specifically addresses the consequences should the District fail to submit the required report to EPA and the public. These provisions include specific, automatic remedies that provide safeguards should the District be unable to meet the equivalency demonstration requirements. These remedies will become federally enforceable upon the effective date of today's action.

Comment 8: Earthjustice argues that the District's offset equivalency tracking system fails to comply with ''some of the most basic elements'' of the Clean Air Act. Specifically, Earthjustice believes the District's annual equivalency demonstration ''does little more than ''track and report'' annual shortfalls in the District's system.'' Earthjustice expresses concern that a year or more may pass before any remedy to cure annual shortfalls takes effect. Earthjustice claims that such a delay is unreasonable and violates the Act.

Response: As noted above, EPA has concluded that the provisions of District Rule 2201, section 7.4.1 provide automatic and mandatory enforceable remedies in the event that an annual shortfall in the District's offset equivalency tracking system occurs. While it is true the remedies set forth in section 7.4.1 take effect only after the District fails to demonstrate equivalency with federal NSR offset requirements, CAA section 173(a)(1)(A) allows for this type of aggregate demonstration (please see response to Comment 9 for further discussion). The reporting schedule is unlikely to cause a significant delay compared to permit-by-permit review of annual aggregate equivalency. Accordingly, EPA has concluded that the District's program reasonably implements section 173(a)(1) and (c) of the Act.

D. Use of Pre-1990 Emission Reduction Credits (ERCs)

Comment 9: AIR argues the District's NSR program improperly relies on pre-1990 emission reduction credits without adequately accounting for these credits. AIR contends that the District may not use pre-1990 emission reduction credits without verifying that the credits are surplus (*i.e.*, in excess of emission reductions expressly required by the Clean Air Act). AIR also notes that there are ''very real concerns'' that the pre-1990 emission reduction credits are not ''actual or quantifiable.''

Response: Section 7.1.3 of Rule 2201 requires the Air Pollution Control Officer to track the surplus value of ''creditable'' emission reductions used as offsets. Section 7.1.5 defines ''creditable'' for purposes of this tracking as emission reductions that are real, surplus, quantifiable, enforceable and permanent. EPA agrees that pre-baseline emission reduction credits create special challenges in meeting these requirements. Thus, EPA agrees with AIR's comment insofar as it suggests the need to carefully scrutinize the creditable value of pre-baseline emission reduction credits in the equivalency tracking system.

However, to the extent AIR challenges EPA's authority to allow individual sources to rely on pre-baseline credits for offsetting purposes, EPA believes AIR's arguments are addressed by our July 19, 2001 limited approval of the District's NSR rules. In that notice, EPA concluded that the District can rely on pre-baseline credits in issuing individual construction permits provided it demonstrates sufficient creditable offsets are available on an aggregate basis. 66 FR 37588–89. EPA believes this conclusion is reasonable in light of the requirements of CAA § 173(a)(1)(A), which provides that offset requirements are satisfied if ''total allowable emissions from existing sources in the region, from new or modified facilities which are not major emitting facilities and from the proposed sources, will be sufficiently less than total emissions from existing sources.'' The language of section 173(a)(1)(A) supports the District's reliance on aggregate emissions to demonstrate equivalency. See also 57 FR 13498, 13508 (Apr. 16, 1992) (noting, ''[f]or purposes of equity, EPA encourages States to allow the use of pre-enactment [*i.e.*, pre-baseline] emission reduction credits for offsetting purposes' and establishing the requirements for States to meet if they wish to allow these credits).[7]

Comment 10: AIR believes the offset equivalency tracking system will have an adverse effect on air quality in the San Joaquin Valley if the system fails to generate enough surplus emission reduction credits to offset pre-1990 credits. According to AIR, EPA is currently unable to predict whether the District Rules 2020 and 2201 will generate sufficient emission reduction credits to demonstrate equivalency with federal NSR rules.

Response: EPA acknowledges AIR's concerns regarding the inclusion of pre-1990 emission reduction credits. However, EPA believes the nonattainment planning process and the equivalency tracking system are the proper mechanisms for addressing these concerns. For example, in the District's 2003 PM–10 Plan recently proposed for approval (69 FR 5412 (Feb. 4, 2004)), the District evaluated the number of pre-baseline ERCs that could be used in the future without jeopardizing attainment or reasonable further progress. See 2003 PM–10 Plan at 3–17 to 3–20 (Amended Dec. 2003). The analysis in the 2003 PM–10 Plan follows that outlined in the August 26, 1994 Seitz Memo. The District uses economic forecast data to project growth in the various industry sectors in the area. Some of this growth will trigger NSR and the offset requirements. This growth would normally not impact the area's inventory because reductions from other sources would be required to compensate for this growth. Using pre-baseline ERCs has the effect of allowing growth in emissions without obtaining actual inventory reductions. The Seitz memo explains that in order to ensure that the use of these pre-baseline ERCs is consistent with the area's attainment plan and reasonable further progress, the District is required to either show that their use is reflected in the growth estimates in an identifiable way or add these ERCs on top of the growth estimates. The District has shown that by capping the number of pre-baseline ERCs that may be used at the projected level of growth, the area can still achieve sufficient emission reductions elsewhere to achieve attainment and reasonable further progress ''net'' of this allowed growth in emissions. This demonstration supports the limited use of pre-baseline ERCs as consistent with attainment of the national ambient air quality standards (NAAQS) for PM–10. EPA agrees that a similar demonstration must be included in the area's ozone plan to account for pre-baseline emission reduction credits and ensure that the plan generates sufficient creditable emission reductions to satisfy reasonable further progress and compliance demonstration requirements for extreme ozone nonattainment areas.[8]

[7] For further discussion on the ability of States to make up for sources' use of non-surplus emission reduction credits, see the August 26 1994 memo from John Seitz, Director, Office of Air Quality Planning and Standards, to David Howekamp, Director, Region IX, Air and Toxics Division (''Seitz Memo''). The memo explains, ''States may provide other reductions to cover all or some portion of the emission reductions required for ensuring ERC's reflect current RACT levels.'' The memo cites the 1994 Economic Incentive Program rule and guidance, which provided, ''[T]he Act does not require that offsets be secured by the new source. Rather, any portion of the necessary offsets may be generated by the local air quality district or by the State.'' 59 FR 16690, 16696 (April 7, 1994).

[8] Given the likely need for stringent controls and significant emissions reductions, it may be more difficult for the area to demonstrate attainment and reasonable further progress if pre-baseline credits are carried forward in the inventory.

We encourage AIR to participate in the public process regarding this plan and to raise any concerns with how pre-baseline emission reduction credits are included.

Comment 11: AIR also notes that there is uncertainty surrounding the District's ability to manage the tracking system if the San Joaquin Valley is redesignated as an extreme ozone nonattainment area. AIR therefore concludes that EPA should not approve Rule 2201 until these uncertainties are resolved.

Response: On April 8, 2004, EPA took final action to reclassify the San Joaquin Valley ozone nonattainment area from a severe to an extreme 1-hour ozone nonattainment area. 69 FR 8126. EPA agrees that redesignation of the ozone nonattainment area will affect the implementation of the offset equivalency tracking system. *See* 68 FR 8127. The District will need to update its NSR program to meet the new federal requirements triggered by redesignation. The offset tracking system and equivalency demonstration was approved for limited purposes and EPA would like to avoid any possible misunderstanding that it was intended to address additional rule deficiencies that would occur if the District failed to update its rules to comply with federal NSR requirements for extreme ozone nonattainment areas.

As AIR acknowledges, it is not certain when or if the area will be unable to demonstrate equivalency in the future. In the meanwhile, we believe it is reasonable to approve the proposed revisions to Rule 2201 because the Rule provides automatic remedies in the event equivalency cannot be demonstrated. Thus, if the District cannot demonstrate equivalency, the District will meet all federal offset requirements on a case-by-case basis.

Comment 12: AIR argues that the District's use of pre-1990 emission reduction credits violates CAA section 193. AIR observes that section 193 prohibits the modification of any pre-1990 implementation plan in effect in a nonattainment area unless the modification ensures equivalent or greater emission reductions. AIR contends that allowing the District to use pre-1990 emission reduction credits without determining whether or not they are surplus would not have been allowed prior to the 1990 Clean Air Act Amendments and would violate section 193.

Response: Section 193 of the Clean Air Act prohibits the modification of any control requirement in effect in a nonattainment area prior to November 15, 1990 ''unless the modification insures equivalent or greater emission reductions of such pollutant.'' AIR does not identify which pre-1990 control requirement is being relaxed in this action. In fact, the revisions being approved today are to District rules approved into the SIP in 2001. It is unclear how section 193 applies to these changes given that they do not revise any pre-1990 control requirements. Moreover, there is no basis for claiming these revisions relax the previously approved SIP measures; to the contrary, these changes strengthen rules 2020 and 2201 by addressing deficiencies noted in the 2001 limited approval/limited disapproval.

Comment 13: Comments from WSPA, along with the District, disagreed with EPA's conclusion that pre-1990 emissions reduction credits are not surplus creditable reductions available to meet federal offset requirements. These commenters argue that the District had properly accounted for pre-1990 credits in previous submittals to EPA. In support of this claim, the commenters cite the District's 1994 Ozone Attainment Demonstration Plan, Revised 1993 Rate of Progress Plan, and Revised Post-1996 Rate of Progress Plan. Several of the comments note that EPA approved these documents without questioning the methodology used to account for pre-1990 emissions reduction credits. WSPA encourages EPA to work with the District to resolve this issue in a manner that maintains the viability of the District's emissions banking program and protects the ability of permittees to obtain offsets for future projects.

Response: EPA has worked with the District in preparing its new 2003 PM–10 Plan to demonstrate more clearly that limited use of pre-baseline ERCs is consistent with attainment of the PM–10 NAAQS and reasonable further progress toward these standards. EPA proposed approval of this plan on February 4, 2004. 69 FR 5412. EPA believes that the plan shows that even assuming a limited amount of growth in emissions is not offset by reductions in the current inventory because pre-baseline ERCs are used, the area will still be able to attain the NAAQS and demonstrate reasonable further progress. The District will need to support a similar demonstration as part of the area's ozone plan.

The plans referenced by commenters did not reasonably support a conclusion that the area can attain the ozone NAAQS while foregoing meaningful offsets from the emissions inventory. EPA approval of an attainment demonstration does not automatically allow the use of pre-baseline ERCs. There is no requirement that an area carry forward pre-baseline ERCs. The decision of whether to allow their continued use is up to the State and local District. Should a State or local District choose to protect these credits for future use, the amount of such ERCs must be correctly included in the plan. A state or local agency could choose to include all pre-baseline ERCs and require compensating reductions elsewhere, or could choose to not allow any pre-baseline ERCs to be carried forward. The plans referenced by commenters included no specific, identifiable quantity of pre-baseline ERCs and did not in any way limit or account for their use. More fundamentally, these demonstration have not proven out. Reliance on such demonstrations while simultaneously redesignating the ozone area from severe to extreme nonattainment would not be reasonable. Until revised demonstrations are provided with respect to ozone attainment, EPA's position remains that the District has not shown that use of these ERCs as offsets can be allowed while preserving the area's ability to attain and make reasonable further progress toward attainment of the ozone NAAQS.

III. EPA Action

No comments were submitted that changed our assessment that the submitted rules address the deficiencies noted in our July 19, 2001 limited disapproval and comply with the relevant CAA requirements. Therefore, as authorized in section 110(k)(3) of the Act, EPA is fully approving SJVUAPCD Rules 2020 and 2201 into the California SIP. This action terminates all sanction and FIP obligations associated with our July 19, 2001 action on a previous version of the rule.

IV. Statutory and Executive Order Reviews

Under Executive Order 12866 (58 FR 51735, October 4, 1993), this action is not a ''significant regulatory action'' and therefore is not subject to review by the Office of Management and Budget. For this reason, this action is also not subject to Executive Order 13211, ''Actions Concerning Regulations That Significantly Affect Energy Supply, Distribution, or Use'' (66 FR 28355, May 22, 2001). This action merely approves state law as meeting Federal requirements and imposes no additional requirements beyond those imposed by state law. Accordingly, the Administrator certifies that this rule will not have a significant economic impact on a substantial number of small entities under the Regulatory Flexibility Act (5 U.S.C. 601 *et seq.*). Because this rule approves pre-existing requirements

under state law and does not impose any additional enforceable duty beyond that required by state law, it does not contain any unfunded mandate or significantly or uniquely affect small governments, as described in the Unfunded Mandates Reform Act of 1995 (Pub. L. 104–4).

This rule also does not have tribal implications because it will not have a substantial direct effect on one or more Indian tribes, on the relationship between the Federal Government and Indian tribes, or on the distribution of power and responsibilities between the Federal Government and Indian tribes, as specified by Executive Order 13175 (65 FR 67249, November 9, 2000). This action also does not have Federalism implications because it does not have substantial direct effects on the States, on the relationship between the national government and the States, or on the distribution of power and responsibilities among the various levels of government, as specified in Executive Order 13132 (64 FR 43255, August 10, 1999). This action merely approves a state rule implementing a Federal standard, and does not alter the relationship or the distribution of power and responsibilities established in the Clean Air Act. This rule also is not subject to Executive Order 13045 ''Protection of Children from Environmental Health Risks and Safety Risks'' (62 FR 19885, April 23, 1997), because it is not economically significant.

In reviewing SIP submissions, EPA's role is to approve state choices, provided that they meet the criteria of the Clean Air Act. In this context, in the absence of a prior existing requirement for the State to use voluntary consensus standards (VCS), EPA has no authority to disapprove a SIP submission for failure to use VCS. It would thus be inconsistent with applicable law for EPA, when it reviews a SIP submission, to use VCS in place of a SIP submission that otherwise satisfies the provisions of the Clean Air Act. Thus, the requirements of section 12(d) of the National Technology Transfer and Advancement Act of 1995 (15 U.S.C. 272 note) do not apply. This rule does not impose an information collection burden under the provisions of the Paperwork Reduction Act of 1995 (44 U.S.C. 3501 *et seq.*).

The Congressional Review Act, 5 U.S.C. section 801 *et seq.*, as added by the Small Business Regulatory Enforcement Fairness Act of 1996, generally provides that before a rule may take effect, the agency promulgating the rule must submit a rule report, which includes a copy of the rule, to each House of the Congress and to the Comptroller General of the United States. EPA will submit a report containing this rule and other required information to the U.S. Senate, the U.S. House of Representatives, and the Comptroller General of the United States prior to publication of the rule in the **Federal Register**. A major rule cannot take effect until 60 days after it is published in the **Federal Register**. This action is not a ''major rule'' as defined by 5 U.S.C. section 804(2).

Under section 307(b)(1) of the Clean Air Act, petitions for judicial review of this action must be filed in the United States Court of Appeals for the appropriate circuit by July 16, 2004. Filing a petition for reconsideration by the Administrator of this final rule does not affect the finality of this rule for the purposes of judicial review nor does it extend the time within which a petition for judicial review may be filed, and shall not postpone the effectiveness of such rule or action. This action may not be challenged later in proceedings to enforce its requirements. (*See* section 307(b)(2).)

List of Subjects in 40 CFR Part 52

Environmental protection, Air pollution control, Incorporation by reference, Intergovernmental relations, Nitrogen dioxide, Ozone, Particulate matter, Reporting and recordkeeping requirements, Volatile organic compounds.

Dated: April 19, 2004.

Wayne Nastri,

Regional Administrator, Region IX.

■ Part 52, Chapter I, Title 40 of the Code of Federal Regulations is amended as follows:

PART 52—[AMENDED]

■ 1. The authority citation for Part 52 continues to read as follows:

Authority: 42 U.S.C. 7401 *et seq.*

Subpart F—California

■ 2. Section 52.220 is amended by adding paragraph (c)(311) (i)(B) to read as follows:

§ 52.220 Identification of plan.

* * * * *

(c) * * *

(311) * * *

(i) * * *

(B) San Joaquin Valley Unified Air Pollution Control District.

(*1*) Rules 2020 and 2201 adopted on December 19, 2002.

* * * * *

[FR Doc. 04–10981 Filed 5–14–04; 8:45 am]

BILLING CODE 6560–50–P

FEDERAL COMMUNICATIONS COMMISSION

47 CFR Parts 0 and 1

[OMD Docket No. 02–339; FCC 04–72]

Implementation of the Debt Collection Improvement Act of 1996 and Adoption of Rules Governing Applications or Requests for Benefits by Delinquent Debtors

AGENCY: Federal Communications Commission.

ACTION: Final rule.

SUMMARY: The Commission amends its rules to implement the Debt Collection Improvement Act of 1996 (DCIA). The amendments largely follow the implementing rules promulgated by the Department of Treasury. The Commission also adopts a rule whereby applications or other requests for benefits would be dismissed upon discovery that the entity applying for or seeking the benefit is delinquent in any debt to the Commission, and that entity fails to resolve the delinquency.

DATES: Effective June 16, 2004, except §§ 1.1112, 1.1116, 1.1161 and 1.1164 and 1.1910 which will become effective on October 1, 2004.

FOR FURTHER INFORMATION CONTACT: Regina W. Dorsey, Special Assistant to the Chief Financial Officer, at 1–202–418–1993, or by e-mail at *Regina.Dorsey@fcc.gov*, or Laurence H. Schecker, Office of General Counsel, Administrative Law Division, at 1–202–418–1720, or by e-mail at *Laurence.Schecker@fcc.gov.*

SUPPLEMENTARY INFORMATION: By this document, FCC 04–72, adopted March 25, and released on April 13, 2004, we amend our rules governing the collection of claims owed the United States, 47 CFR part 1 subpart O, to implement the Debt Collection Improvement Act of 1996, Public Law 104–134, 110 Stat. 1321, 1358 (1996) (DCIA). The term ''claim'' or ''debt'' has the meaning used in 31 U.S.C. 3701(b), which is any amount of funds or property that has been determined by an appropriate official of the Federal Government to be owed to the United States by a person, organization or entity other than a Federal Agency. We also adopt a rule providing that we will withhold action on applications and other requests for benefits upon discovery that the entity applying for or seeking benefits is delinquent in its non-tax debts owed to the Commission, and dismiss such applications or requests if the delinquent debt is not resolved.

I. DCIA Rules

In the Notice of Proposed Rulemaking (NPRM) in this proceeding, we proposed many revisions to our rules based on the statutory changes adopted in the DCIA, as implemented in rules adopted by the Departments of Treasury and Justice. No comments relevant to the proposed rule changes were received. We therefore adopt the DCIA rule changes as generally proposed in the NPRM. As we noted in the NPRM, the major changes to the Commission's debt collection rules include an increase in the principal claim amount from $20,000 to $100,000 or such amount as the Attorney General deems appropriate, that agencies are authorized to compromise or to suspend or terminate collection activity thereon without the concurrence of the Department of Justice, and an increase in the minimum amount of a claim that may be referred to the Department of Justice from $600 to $2,500. The rules also reflect several new debt collection procedures under the DCIA, including but not limited to (a) transfer or referral of delinquent debt to the Department of the Treasury or Treasury-designated debt collection centers for collection (known as cross-servicing); (b) mandatory, centralized administrative offset by disbursing officials; (c) mandatory credit bureau reporting; and (d) mandatory prohibition against extending Federal assistance in the form of loan or loan guarantees to delinquent debtors. The rules adopted conform the Commission's definitions to those used by the Departments of Justice and Treasury in their regulations on the DCIA. Finally, we have added § 1.1935 adopting the new Treasury regulations adopting the DCIA administrative wage garnishment requirements. *See Administrative Wage Garnishment*, 63 FR 25139 (May 6, 1998) (permitting agencies to garnish up to 15 percent of the disposable pay of a debtor to satisfy delinquent non-tax debt owed), *adopting* 31 CFR 285.11.

We also incorporate the Federal salary offset procedures, governed by 5 U.S.C. 5514 and Office of Personnel Management (OPM) regulations. *See* 5 CFR 550.1104. Many other adjustments have been made to take into account debts arising under our auction rules. Other provisions have been redrafted for clarity but do not substantively change debt collection procedures.

II. Delinquent Debtors

As noted, we received no comments concerning our proposed rules changes, including the proposed ''red light rule.'' In the NPRM, we explained that our regulatory and application fee rules already permit us as a matter of discretion to dismiss applications for failure to pay appropriate fees. *See* 47 U.S.C. 158(c)(2), 159(c)(2). *See also* 47 CFR. 1.1109(c), 1.1109(d)(1); 1.1112(a)(1)(i); 1.1112(a)(2)(ii); 1.1157(a)(2); 1.1161(a)(1)(i); 1.1161(a)(2)(ii); 1.1164(e); and 1.1166(c).

Our auction rules provide that an applicant must certify that it ''is not in default on any Commission licenses and that it is not delinquent on any non-tax debt owed to any Federal agency'' or its application will be dismissed. 47 CFR 1.2105(a)(2)(x). *See also* 47 CFR 1.2105(a)(2)(xi). (These rules are not affected by the proposed red light rule.) 47 CFR 1.2105(b). We proposed that as a next step in the improvement of the management of the Commission's accounts, we would adopt a rule that anyone delinquent in any non-tax debts owed to the Commission will be ineligible for or barred from receiving a license or other benefit until the delinquency has been resolved by payment in full or by the completion of satisfactory arrangements for payment.

We adopt the rule changes as indicated in the Appendix to this Order. Our regulatory and application fee rules are amended (with some minor modifications from the rules proposed in the NPRM) to make it clear that we will withhold action on applications or other requests for benefits by delinquent debtors and ultimately dismiss those applications or other requests if payment of the delinquent debt is not made or other satisfactory arrangement for payment is not made. In addition, we are adding a generally applicable rule (with some necessary exceptions, as discussed below) to be added as § 1.1910 of our rules as set forth in the appendix to withhold action on applications or other requests for benefits by debtors delinquent in debts other than application or regulatory fees, and to dismiss those applications or other requests if the delinquent debt is not paid or satisfactory arrangement for payment is not made.

Under the rules adopted here, the Commission will not approve any applications or other authorizations until we determine that all delinquent debt to the Commission by entities using the same taxpayer identifying number (TIN) is paid or satisfactory arrangements are made for payment. Applications subject to the red light rule do not include matters that are subject to more restrictive procedures, *e.g.* requests to waive, defer, or reduce application fees or regulatory fees under 47 CFR 1.1117 and 1.1166, and petitions or applications for review under 47 CFR 1.1117, 1.1159, and 1.1167 related to applications or other requests requiring the filing of an FRN. *See* para 10, infra. *See also* 31 U.S.C. 7701(c)(2) (DCIA definition of doing business with the Federal government); 47 CFR 1.8002(a) (indicating anyone doing business with the Commission must obtain an FRN).

An applicant's FCC Register Number (FRN) will be used to determine all delinquent debt owed attributable to all entities using the same TIN. Entities may acquire multiple FRNs. However, only delinquent debt attributable to the same TIN will trigger our proposed red light rule.

By delinquent debt we mean a claim or debt that has not been paid by the date specified in the initial written demand for payment, applicable agreement, instrument, or Commission rule or rules, unless other satisfactory payment arrangements have been made by that date, or, at any time thereafter, the debtor has failed to satisfy an obligation under a payment agreement or instrument with the agency, or pursuant to a Commission rule. *See also* 31 CFR 900.2(b) (''a debt is 'delinquent' if it has not been paid by the date specified in the agency's initial written demand for payment or applicable agreement or instrument (including post-delinquency payment agreement), unless other satisfactory payment arrangements have been made.'').

We note that, pursuant to section 504(c) of the Communications Act, as amended, 47 U.S.C. 504(c), we do not treat monetary forfeitures imposed after issuance of a notice of apparent liability as debts owed to the United States until the forfeiture had been partially paid or a court of competent jurisdiction has ordered payment of the forfeiture and such order is final. All Commission electronic systems are linked with Revenue And Management Information System (RAMIS), which after the rules take effect, will check the FRN provided on the filing for eligibility-based fee sufficiency and the existence of any non-tax delinquent debt. The delinquency of any entity covered by the same TIN as that used by the entity making the filing will trigger this new rule. The delinquent debtor will be notified that a fee and delinquent debt check revealed either a fee insufficiency or delinquent debt that must be resolved within 30 days of the notification. Resolution includes payment of the debt, or other satisfactory resolution such as adequate arrangement that the debt will be paid. This resolution period is not intended to restrict our exercise of any right to recover or collect amounts due to the Commission. An application or other request for benefit

will not be granted until the delinquent debt issue has been resolved. If the delinquency has not been resolved within 30 days of the date of the notification letter, the application or request for authorization will be dismissed.

We asked in the NPRM how to handle those situations where a timely challenge has been filed either to the existence of or the amount of a debt, and whether such debts should be considered delinquent for purposes of the red light rule. *Cf.* 31 CFR 285.13(d)(2)(iii) (a debt is not delinquent for purposes of the denial of financial assistance to delinquent debtors under 31 U.S.C. 3720B if it is subject to time-filed administrative or judicial challenge). No comments were received. We believe that a timely written challenge to a debt should preclude consideration of the debt for purposes of the red light rule. Accordingly, where an applicant has filed a timely administrative appeal, or a contested judicial proceeding, challenging either the existence of, or the amount of, a debt, such debt shall not be considered delinquent for purpose of the red light rule. For the purpose of the red light rule, we will consider appeals made to the Administrators of the Universal Service Fund and the Telecommunications Relay Services Fund and to the Billing and Collections Agent for the North American Numbering Plan as administrative appeals. Similarly, if an applicant has submitted a written request for compromise of debt in conformance with applicable rules, such a debt shall not be considered delinquent for purposes of the red light rule. *See* 31 U.S.C. 3711. As we noted in the NPRM, for purposes of part 1, subpart O only, an installment payment under 47 CFR 1.2110(g) will not be considered delinquent until the expiration of all applicable grace periods and any other applicable periods under Commission rules to make the payment due. The rules adopted here in no way affect the Commission's rules regarding payment for licenses (including installment, down, or final payments) or automatic cancellation of Commission licenses.

We invited comment on the exceptions to the red light rule, but received no comments. However, we raised several issues in this regard that we now resolve.

In the NPRM, we proposed that emergency authorizations, special temporary authority (STA) applications involving safety of life or property, including national security emergencies, requests to waive, defer, or reduce applications fees or regulatory fees under 47 CFR. 1.1117 and 1.1166, and petitions or applications for review under 47 CFR 1.1117, 1.1159, and 1.1167 related to other requests will not be subject to the red light rule. *See FRN Order*, 16 FCC Rcd at 16146 n.63 (citing regulations for emergency authorizations and STAs).

We proposed that such applications should include the FRN, as we noted in the *FRN Order. Id.* at 46. We also proposed that we would examine any subsequent applications for regular authority in place of the emergency authorization or STA to determine if the applicant is a delinquent debtor, and would not grant such applications until such delinquencies are resolved. We adopt this proposal as set forth in the NPRM. Further, we expand these exceptions to include situations where an entity's license is cancelled or expired, and where the entity seeks STA in order to continue providing service to a substantial number of customers or end-users for a brief period until those customers or end-users can be transitioned to other methods of communication. This approach minimizes service disruption to the public, including those who use radio systems for E911 and emergency communications.

We also sought comment on how to handle certain sections of the Communications Act that contain congressionally mandated deadlines, or provide that if the Commission fails to act by a set date, the Commission is deemed to have approved the action sought. *See* 47 U.S.C. 271(d)(3) (Bell operating company interLATA applications must be decided within 90 days); 47 U.S.C. 252(e)(5) (if a state commission fails to act on an interconnection agreement, the Commission shall issue an order preempting the state commission's jurisdiction within 90 days of notice of failure of the state to act); 47 U.S.C. 405(b)(1) (Commission must act on petition for reconsideration of an order concluding a hearing under section 204(a) or 208(b)); 47 U.S.C. 208(b)(1) (Commission must issue an order concluding an investigation of lawfulness of a charge, classification, regulation, or practice within 5 months after filing of complaint); 47 U.S.C. 614(h)(C)(iv) (Commission must decide cable must carry complaints within 120 days). *See* 47 U.S.C. 160(c) (Commission must act on petition for forbearance within one year, extendable by an additional 90 days, or petition deemed granted).

In addition, we noted that certain sections of the Commission's rules provide that uncontested applications are granted automatically once a given period of time has passed. *See, e.g.*, 47 CFR 63.03 (a), which allows an applicant to transfer control of the domestic lines or authorization to operate on the 31st day after the date of public notice listing a domestic section 214 transfer of control application as accepted for filing as a streamlined application. We proposed that in these circumstances, if the applicant is found to be a delinquent debtor at the statutory or Commission imposed deadline, the application will be dismissed, consistent with the general rule. We received no comments on this proposal. We therefore adopt the rule as proposed. We continue to believe that this result is unlikely. Debtors will receive sufficient notice in advance of a debt being classified as delinquent. We expect that most applicants will diligently check to determine whether they are delinquent in any debts owed to the Commission and resolve any such delinquencies in a timely manner. Nonetheless, dismissal of such applications for delinquencies is possible.

The red light rule permits delinquent debtors to resolve the delinquency within 30 days to avoid dismissal of an application. We proposed that the 30-day resolution period would not apply to applications or requests for benefits where more restrictive rules govern treatment of delinquent debtors. For example, under existing rules auction applicants must already certify that they are not delinquent in non-tax debt or their short form application will be dismissed and they will be ineligible to participate in an auction. *See* 47 CFR 1.2105(a)(2)(x) and (xi).

We noted, however, that the red light rule would apply to subsequent applications filed by winning bidders, *e.g.*, the long-form application. We adopt this proposal without modification.

In the NPRM, we asked whether the Bankruptcy Code requires an exception to the red light rule. No comments were received concerning this question. We have concluded that we must adopt an exception to the red light rule to comply with section 525(a) of the Bankruptcy Code as interpreted by the Supreme Court in *FCC* v. *Nextwave Personal Communications, Inc.,* 537 U.S. 293 (2003). Therefore, the rules provide that applications or requests for benefits to which 11 U.S.C. 525(a) applies will not be dismissed by virtue of the applicant's delinquent status. We are not always aware that a delinquent debtor has filed for bankruptcy. Therefore, if an applicant receives a letter pursuant to

§ 1.1910 of the Commission's rules and that applicant has filed for bankruptcy, it should notify the Managing Director in writing of its status so that it can be determined whether section 525(a) applies.

In some instances, such as tariffs, filings with the Commission go into effect immediately (or within one day), thus precluding a check to determine if the filer is a delinquent debtor before the request goes into effect. *See* 47 U.S.C. 203, 206.

In the tariff situation, we have the ability to take appropriate action against a tariff after its effective date for noncompliance with any of our rules. *See* 47 U.S.C. 205. We adopt this proposal for tariffs that go into effect immediately on filing and where it is later discovered that the filer is a delinquent debtor. We will not apply this rule to multi-party tariffs where one party is discovered to be a delinquent debtor, as we do not wish to penalize the other parties to the tariff.

We did not propose to pre-screen FOIA requestors for delinquent debt under the proposed procedures, as our FOIA rules already address situations where FOIA requesters previously failed to pay FOIA fees. *See* 47 CFR 0.469(a)(2).

We adopt this proposal as previously stated. We note, however, that if an applicant is delinquent in paying its FOIA fees that delinquency will trigger the red light rule for other applications.

We proposed that if we adopted the red light rule, it would apply to any applications or requests for benefits pending at the time the rule goes into effect. Pending applications or requests for benefits are subject to a check for debt delinquency at any time before the request is granted. No comments were received on this proposal, and we adopt it as stated. Any submissions on or after the effective date of the red light rule will be subject to screening for delinquent debt.

The FRN became mandatory on December 3, 2001. *See FRN Order,* 16 FCC Rcd at 16148. Prior to that date, we encouraged entities doing business with the Commission to obtain and include the FRN in their filings with the Commission. *See New Commission Registration System (CORES) to be Implemented July 19,* 15 FCC Rcd 18754 (2001).

While many applicants included the FRN prior to December 3, 2001, many did not. We proposed that applications still pending if we ultimately adopt the red light rule that were filed prior to December 3, 2001 without an FRN will not be subject to the rule due to the administrative difficulties in checking for delinquent debt on those applications. Absent any comments on this issue, we adopt the proposal as stated.

III. Delegation of Authority

Pursuant to the DCIA and the FCCS, the head of the agency is empowered to collect claims of the United States for money or property arising out of activities of the agency, compromise debts that do not exceed $100,000 without the approval of the Department of Justice, and to suspend or terminate collection activity on a debt. *See* 31 U.S.C. 3711 (a) (1); 31 CFR part 901. *See also* 31 U.S.C. 3711(a) (2); 31 CFR part 902.

The DCIA rules we adopt here (and the predecessor rules) define the Chairman as the head of the agency for DCIA purposes, but neither the DCIA implementing rules nor our existing delegations of authority expressly address various administrative determinations specifically assigned to the head of the agency under the DCIA. *See* 47 CFR 1.1901(c) *See also* 47 CFR 0.211 and part 1, subpart O (2002).

Additionally, the head of the agency is authorized to waive the ban on the issuance of Federal financial assistance to persons or entities delinquent in non-tax debt owed to the Federal Government, and to delegate this authority to the Chief Financial Officer or the Deputy Chief Financial Officer. *See* 31 U.S.C. 3720B(a) (waiver of ban on issuance of Federal Financial assistance to delinquent debtors by agency head); 3720B(b) (delegation of waiver authority to Chief or Deputy Chief Financial Officer).

Our existing regulations did not specifically address this authority. *See* 47 CFR 0.211, 0.231, and part 1, subpart O (2002).

We amend the delegations of authority to make clear that the Chairman may make all administrative determinations under the DCIA. We also amend the rules to delegate to the Managing Director and the General Counsel authority to make administrative determinations (except waiver determinations under section 3720B) under the DCIA. Finally, we add a delegation to the Chief Financial Officer and the Deputy Chief Financial Officer to make the waiver determination under 31 U.S.C. 3720B. We adopt these rules of agency organization, procedure and practice without notice and comment. *See* 5 U.S.C. 553(b)(A).

IV. Procedural Matters and Ordering Clauses

Regulatory Flexibility Certification. We hereby certify that the rules adopted in this Order will not have a significant economic impact on a substantial number of small entities. *See* 5 U.S.C. 605(b). The amendment of the delegations of authority is adopted without notice and comment and therefore does not require regulatory flexibility analysis. *See* 5 U.S.C. 604(a). The amendment of our part 1 subpart O rules to conform to the DCIA streamline our debt collection rules reflecting the statutory language contained in the DCIA, and therefore a regulatory flexibility analysis is not required. *See* FCCS Rules, 65 FR 70395, November 22, 2000 (certifying under section 605(b) that the FCCS rules did not require a regulatory flexibility analysis). The rule amendments requiring payment of delinquent debts before final action is taken on an application or other request for a federal benefit will not affect a substantial number of small entities. We estimate that there are approximately 1,225 debtors currently delinquent in their debt to the Commission out of approximately 750,000 entities that hold an FRN. This means that potentially less than ¼ percent of entities doing business with the Commission could be affected by this rule. Of the 1225 delinquent debtors, it is impossible to determine how many are small entities, but we can reasonably posit that less than all 1225 are small entities. Consequently, fewer than one percent of entities subject to this rule are small entities. We have no reason to expect that this percentage will change over time. Therefore, we certify pursuant to 5 U.S.C. 605(b) that the ''red light rule'' does not require a regulatory flexibility analysis.

Accordingly, *it is ordered* that, pursuant to sections 4(i), 8(c)(2), 9(c)(2), and 303(r) of the Communications Act of 1934, as amended, 47 U.S.C. 154(i), 158(c)(2), 159(c)(2), and 303(r), and 5 U.S.C. 5514, the rules set forth in the appendix are hereby *adopted,* effective June 16, 2004, except that changes to rules 1.1112, 1.1116, 1.1161 and 1.1164 and newly adopted rule 1.1910 are effective October 1, 2004.

It is further ordered that the Commission's Consumer & Governmental Affairs Bureau, Reference Information Center, shall send a copy of this Report and Order including the Regulatory Flexibility Certification, to the Chief Counsel for Advocacy of the Small Business Administration.

List of Subjects in 47 CFR Parts 0 and 1

Administrative practice and procedure.

Federal Communications Commission.

Marlene H. Dortch,

Secretary.

Rule Changes

■ For the reasons discussed in the preamble the Federal Communications Commission proposes to amend 47 CFR parts 0 and 1 as follows:

PART 0—COMMISSION ORGANIZATION

■ 1. The authority citation for part 0 continues to read as follows:

Authority: Sec. 5, 48 Stat. 1068, as amended; 47 U.S.C. 155, 225, unless otherwise noted.

■ 2. Section 0.211 is amended by adding paragraph (f) to read as follows:

§ 0.211 Chairman.

* * * * *

(f) Authority to act as ''Head of the Agency'' or ''Agency Head'' for all administrative determinations pursuant to the Debt Collection Improvement Act of 1996, Public Laws 104–134, 110 Stat. 1321, 1358 (1996) (DCIA).

■ 3. Section 0.231 is amended by adding paragraph (f) to read as follows:

§ 0.231 Authority delegated

* * * * *

(f) (1) The Managing Director, or his designee, is delegated authority to perform all administrative determinations provided for by the Debt Collection Improvement Act of 1996, Public Laws 104–134, 110 Stat. 1321, 1358 (1996) (DCIA), including, but not limited to the provisions of Title 31, United States Code section 3711 to:

(i) Collect claims of the United States Government for money or property arising out of the activities of, or referred to, the Federal Communications Commission,

(ii) Compromise a claim of the Government of not more than $100,000 (excluding interest) or such higher amount as the Attorney General of the United States may from time to time prescribe, and

(iii) Suspend or end collection action on a claim of the Government of not more than $100,000 (excluding interest) when it appears that no person liable on the claim has the present or prospective ability to pay a significant amount of the claim or the cost of collecting the claim is likely to be more than the amount recovered.

(2)(i) This delegation does not include waiver authority provided by 31 U.S.C. 3720B.

(ii) The Chief Financial Officer, or the Deputy Chief Financial Officer, is delegated authority to perform all administrative determinations provided for by 31 U.S.C. 3720B.

* * * * *

■ 4. Section 0.251 is amended by adding paragraph (i) to read as follows:

§ 0.251 Authority delegated.

* * * * *

(i) The General Counsel is delegated authority to perform all administrative determinations provided for by the Debt Collection Improvement Act of 1996, Public Law 104–134, 110 Stat. 1321, 1358 (1996) (DCIA), including, but not limited to the provisions of Title 31, U.S.C. 3711 to:

(1) Collect claims of the United States Government of money or property arising out of the activities of, or referred to, the Federal Communications Commission,

(2) Compromise a claim of the Government of not more than $100,000 (excluding interest) or such higher amount as the Attorney General of the United States may from time to time prescribe, and

(3) Suspend or end collection action on a claim of the Government of not more than $100,000 (excluding interest) when it appears that no person liable on the claim has the present or prospective ability to pay a significant amount of the claim or the cost of collecting the claim is likely to be more than the amount recovered.

Note to paragraph (i): This delegation does not include waiver authority provided by 31 U.S.C. 3720B.

PART 1—PRACTICE AND PROCEDURE

■ 5. The authority citation for part 1 continues to read as follows:

Authority: 47 U.S.C. 151, 154(i), 154(j), 155, 225, 303(r), 309, and 325(e).

■ 6. Section 1.1112 is amended by revising paragraph (a) introductory text and paragraph (c) to read as follows:

§ 1.1112 Conditionality of Commission or staff authorizations.

(a) Any instrument of authorization granted by the Commission, or by its staff under delegated authority, will be conditioned upon final payment of the applicable fee or delinquent fees and timely payment of bills issued by the Commission. As applied to checks, bank drafts and money orders, final payment shall mean receipt by the Treasury of funds cleared by the financial institution on which the check, bank draft or money order is drawn.

* * * * *

(c) (1) Where an applicant is found to be delinquent in the payment of application fees, the Commission will make a written request for the delinquent fee, together with any penalties that may be due under this subpart. Such request shall inform the applicant/filer that failure to pay or make satisfactory payment arrangements will result in the Commission's withholding action on, and/or as appropriate, dismissal of, any applications or requests filed by the applicant. The staff shall also inform the applicant of the procedures for seeking Commission review of the staff's fee determination.

(2) If, after final determination that the fee is due or that the applicant is delinquent in the payment of fees, and payment is not made in a timely manner, the staff will withhold action on the application or filing until payment or other satisfactory arrangement is made. If payment or satisfactory arrangement is not made within 30 days of the date of the original notification, the application will be dismissed.

■ 7. Section 1.1116 is amended by revising paragraph (a) introductory text, paragraph (b), and by adding paragraph (d) to read as follows:

§ 1.1116 Penalty for late or insufficient payments.

(a) Filings subject to fees and accompanied by defective fee submissions will be dismissed under § 1.1109 (b) of this subpart where the defect is discovered by the Commission's staff within 30 calendar days from the receipt of the application or filing by the Commission. Filings by delinquent debtors will also be dismissed if the delinquent debt is not paid or satisfactory arrangements are not made within 30 days of the date of the original notification. See 47 CFR 1.1910.

* * * * *

(b) Applications or filings accompanied by insufficient fees or no fees, or where such applications or filings are made by persons or organizations that are delinquent in fees owed to the Commission, that are inadvertently forwarded to Commission staff for substantive review will be billed for the amount due if the discrepancy is not discovered until after 30 calendar days from the receipt of the application or filing by the Commission. Applications or filings that are accompanied by insufficient fees or no

fees will have a penalty charge equaling 25 percent of the amount due added to each bill. Any Commission action taken prior to timely payment of these charges is contingent and subject to rescission.

* * * * *

(d) Failure to submit fees, following notice to the applicant of failure to submit the required fee, is subject to collection of the fee, including interest thereon, any associated penalties, and the full cost of collection to the Federal government pursuant to the provisions of the Debt Collection Improvement Act, 31 U.S.C. 3717 and 3720A. See 47 CFR 1.1901 through 1.1952. The debt collection processes described above may proceed concurrently with any other sanction in this paragraph.

■ 8. Section 1.1118 is amended by revising paragraph (a) to read as follows:

§ 1.1118 Error claims.

(a) Applicants who wish to challenge a staff determination of an insufficient fee or delinquent debt may do so in writing. A challenge to a determination that a party is delinquent in paying the full application fee must be accompanied by suitable proof that the fee had been paid or waived (or deferred from payment during the period in question), or by the required application payment and any assessment penalty payment (see § 1.1116) of this subpart). Failure to comply with these procedures will result in dismissal of the challenge. These claims should be addressed to the Federal Communications Commission, Attention: Financial Operations, 445 12th St. SW., Washington, DC 20554 or emailed to *ARINQUIRIES@fcc.gov.*

* * * * *

■ 9. Section 1.1161 is amended by revising paragraph (a) introductory text and by revising paragraph (c) to read as follows:

§ 1.1161 Conditional license grants and delegated authorizations.

(a) Grant of any application or an instrument of authorization or other filing for which a regulatory fee is required to accompany the application or filing, will be conditioned upon final payment of the current or delinquent regulatory fees. Final payment shall mean receipt by the U.S. Treasury of funds cleared by the financial institution on which the check, bank draft, money order, credit card (Visa, MasterCard, American Express, or Discover), wire or electronic payment is drawn.

* * * * *

(c)(1) Where an applicant is found to be delinquent in the payment of regulatory fees, the Commission will make a written request for the fee, together with any penalties that may be rendered under this subpart. Such request shall inform the regulatee that failure to pay may result in the Commission withholding action on any application or request filed by the applicant. The staff shall also inform the regulatee of the procedures for seeking Commission review of the staff's determination.

(2) If, after final determination that the fee is due or that the applicant is delinquent in the payment of fees and payment is not made in a timely manner, the staff will withhold action on the application or filing until payment or other satisfactory arrangement is made. If payment or satisfactory arrangement is not made within 30 days, the application will be dismissed.

■ 10. Section 1.1164 is amended by adding paragraph (f)(5) to read as follows:

§ 1.1164 Penalties for late or insufficient regulatory fee payments.

* * * * *

(f) * * *

(5) An application or filing by a regulatee that is delinquent in its debt to the Commission is also subject to dismissal under 47 CFR 1.1910.

■ 11. Section 1.1167 is amended by revising paragraph (a) to read as follows:

§ 1.1167 Error claims related to regulatory fees.

(a) Challenges to determinations or an insufficient regulatory fee payment or delinquent fees should be made in writing. A challenge to a determination that a party is delinquent in paying a standard regulatory fee must be accompanied by suitable proof that the fee had been paid or waived (deferred from payment during the period in question), or by the required regulatory payment and any assessed penalty payment (see § 1.1164(c) of this subpart). Challenges submitted with a fee payment must be submitted to address stated on the invoice or billing statement. Challenges not accompanied by a fee payment should be filed with the Commission's Secretary and clearly marked to the attention of the Managing Director or emailed to *ARINQUIRIES@fcc.gov.*

* * * * *

■ 12. Subpart O of part 1 is revised to read as follows:

Subpart O—Collection of Claims Owed the United States

General Provisions

Sec.

1.1901 Definitions and construction.
1.1902 Exceptions.
1.1903 Use of procedures.
1.1904 Conformance to law and regulations.
1.1905 Other procedures; collection of forfeiture penalties.
1.1906 Informal action.
1.1907 Return of property or collateral.
1.1908 Omissions not a defense.
1.1909 [Reserved]
1.1910 Effect of insufficient fee payments, delinquent debts, or debarment.

Administrative Offset—Consumer Reporting Agencies—Contracting for Collection

1.1911 Demand for payment.
1.1912 Collection by administrative offset.
1.1913 Administrative offset against amounts payable from Civil Service Retirement and Disability Fund.
1.1914 Collection in installments.
1.1915 Exploration of compromise.
1.1916 Suspending or terminating collection action.
1.1917 Referrals to the Department of Justice and transfers of delinquent debt to the Secretary of Treasury.
1.1918 Use of consumer reporting agencies.
1.1919 Contracting for collection services.
1.1920–1.1924 [Reserved]

Salary Offset–Individual Debt

1.1925 Purpose.
1.1926 Scope.
1.1927 Notification.
1.1928 Hearing.
1.1929 Deduction from employee's pay.
1.1930 Liquidation from final check or recovery from other payment.
1.1931 Non-waiver of rights by payments.
1.1932 Refunds.
1.1933 Interest, penalties and administrative costs.
1.1934 Recovery when the Commission is not creditor agency.
1.1935 Obtaining the services of a hearing official.
1.1936 Administrative Wage Garnishment.
1.1937–1.1939 [Reserved]

Interest, Penalties, Administrative Costs and Other Sanctions

1.1940 Assessment.
1.1941 Exemptions.
1.1942 Other sanctions.
1.1943–1.1949 [Reserved]

Cooperation With the Internal Revenue Service

1.1950 Reporting discharged debts to the Internal Revenue Service.
1.1951 Offset against tax refunds.
1.1952 Use and disclosure of mailing addresses.

General Provisions Concerning Interagency Requests

1.1953 Interagency requests.

Authority: 31 U.S.C. 3701; 31 U.S.C. 3711 *et seq.*; 5 U.S.C. 5514; sec. 8(1) of E.O. 11609 (3 CFR , 1971–1975 Comp., p.586); redesignated in sec. 2–1 of E.O. 12107; (3 CFR, 1978 Comp., p.264); 31 CFR parts 901–904; 5 CFR part 550.

§ 1.1901 Definitions and construction.

For purposes of this subpart:

(a) The term *administrative offset* means withholding money payable by the United States Government to, or held by the Government for, a person, organization, or entity to satisfy a debt the person, organization, or entity owes the Government.

(b) The term *agency* or *Commission* means the Federal Communications Commission (including the Universal Service Fund, the Telecommunications Relay Service Fund, and any other reporting components of the Commission) or any other agency of the U.S. Government as defined by section 105 of title 5 U.S.C., the U.S. Postal Service, the U.S. Postal Rate Commission, a military department as defined by section 102 of title 5 U.S.C., an agency or court of the judicial branch, or an agency of the legislative branch, including the U.S. Senate and the U.S. House of Representatives.

(c) The term *agency head* means the Chairman of the Federal Communications Commission.

(d) The term *application* includes in addition to petitions and applications elsewhere defined in the Commission's rules, any request, as for assistance, relief, declaratory ruling, or decision, by the Commission or on delegated authority.

(e) The terms *claim* and *debt* are deemed synonymous and interchangeable. They refer to an amount of money, funds, or property that has been determined by an agency official to be due to the United States from any person, organization, or entity, except another Federal agency. For purposes of administrative offset under 31 U.S.C. 3716, the terms ''claim'' and ''debt'' include an amount of money, funds, or property owed by a person to a State, the District of Columbia, American Samoa, Guam, the United States Virgin Islands, the Commonwealth of the Northern Mariana Islands, or the Commonwealth of Puerto Rico. ''Claim'' and ''debt'' include amounts owed to the United States on account of extension of credit or loans made by, insured or guaranteed by the United States and all other amounts due the United States from fees, leases, rents, royalties, services, sales of real or personal property, overpayments, penalties, damages, interest, taxes, and forfeitures issued after a notice of apparent liability that have been partially paid or for which a court of competent jurisdiction has order payment and such order is final (except those arising under the Uniform Code of Military Justice), and other similar sources.

(f) The term *creditor agency* means the agency to which the debt is owed.

(g) The term *debt collection center* means an agency of a unit or subagency within an agency that has been designated by the Secretary of the Treasury to collect debt owed to the United States. The Financial Management Service (FMS), Fiscal Service, United States Treasury, is a debt collection center.

(h) The term *demand letter* includes written letters, orders, judgments, and memoranda from the Commission or on delegated authority.

(i) The term ''*delinquent*'' means a claim or debt which has not been paid by the date specified by the agency unless other satisfactory payment arrangements have been made by that date, or, at any time thereafter, the debtor has failed to satisfy an obligation under a payment agreement or instrument with the agency, or pursuant to a Commission rule. For purposes of this subpart only, an installment payment under 47 CFR 1.2110(g) will not be considered deliquent until the expiration of all applicable grace periods and any other applicable periods under Commission rules to make the payment due. The rules set forth in this subpart in no way affect the Commission's rules, as may be amended, regarding payment for licenses (including installment, down, or final payments) or automatic cancellation of Commission licenses (see 47 CFR 1.1902(f)).

(j) The term *disposable pay* means that part of current basic pay, special pay, incentive pay, retired pay, retainer pay, or in the case of an employee not entitled to basic pay, other authorized pay remaining after the deduction of any amount required by law to be withheld. Agencies must exclude deductions described in 5 CFR 581.105(b) through (f) to determine disposable pay subject to salary offset.

(k) The term *employee* means a current employee of the Commission or of another agency, including a current member of the Armed Forces or a Reserve of the Armed Forces (Reserve).

(l) The term *entity* includes natural persons, legal associations, applicants, licensees, and regulatees.

(m) The term *FCCS* means the Federal Claims Collection Standards jointly issued by the Secretary of the Treasury and the Attorney General of the United States at 31 CFR parts 900–904.

(n) The term *paying agency* means the agency employing the individual and authorizing the payment of his or her current pay.

(o) The term *referral for litigation* means referral to the Department of Justice for appropriate legal proceedings except where the Commission has the statutory authority to handle the litigation itself.

(p) The term *reporting component* means any program, account, or entity required to be included in the Agency's Financial Statements by generally accepted accounting principles for Federal Agencies.

(q) The term *salary offset* means an administrative offset to collect a debt under 5 U.S.C. 5514 by deduction(s) at one or more officially established pay intervals from the current pay account of an employee without his or her consent.

(r) The term *waiver* means the cancellation, remission, forgiveness, or non-recovery of a debt or fee, including, but not limited to, a debt due to the United States, by an entity or an employee to an agency and as the waiver is permitted or required by 5 U.S.C. 5584, 10 U.S.C. 2774, 31 U.S.C. 3711, or any other law.

(s) Words in the plural form shall include the singular, and vice-versa, and words signifying the masculine gender shall include the feminine, and vice-versa. The terms *includes* and *including* do not exclude matters not listed but do include matters of the same general class.

§ 1.1902 Exceptions.

(a) Claims arising from the audit of transportation accounts pursuant to 31 U.S.C. 3726 shall be determined, collected, compromised, terminated or settled in accordance with regulations published under the authority of 31 U.S.C. 3726 (see 41 CFR part 101–41).

(b) Claims arising out of acquisition contracts subject to the Federal Acquisition Regulations (FAR) shall be determined, collected, compromised, terminated, or settled in accordance with those regulations. (See 48 CFR part 32). If not otherwise provided for in the FAR, contract claims that have been the subject of a contracting officer's final decision in accordance with section 6(a) of the Contract Disputes Act of 1978 (41 U.S.C. 605(a)), may be determined, collected, compromised, terminated or settled under the provisions of this regulation, except that no additional review of the debt shall be granted beyond that provided by the contracting officer in accordance with the provisions of section 6 of the Contract Disputes Act of 1978 (41 U.S.C. 605), and the amount of any interest, administrative charge, or penalty charge shall be subject to the limitations, if any, contained in the contract out of which the claim arose.

(c) Claims based in whole or in part on conduct in violation of the antitrust laws, or in regard to which there is an

indication of fraud, the presentation of a false claim, or a misrepresentation on the part of the debtor or any other party having an interest in the claim, shall be referred to the Department of Justice (DOJ) as only the DOJ has authority to compromise, suspend, or terminate collection action on such claims. The standards in the FCCS relating to the administrative collection of claims do apply, but only to the extent authorized by the DOJ in a particular case. Upon identification of a claim based in whole or in part on conduct in violation of the antitrust laws or any claim involving fraud, the presentation of a false claim, or misrepresentation on the part of the debtor or any party having an interest in the claim, the Commission shall promptly refer the case to the Department of Justice for action. At its discretion, the DOJ may return the claim to the forwarding agency for further handling in accordance with the standards in the FCCS.

(d) Tax claims are excluded from the coverage of this regulation.

(e) The Commission will attempt to resolve interagency claims by negotiation in accordance with Executive Order 12146 (3 CFR 1980 Comp., pp. 409–412).

(f) Nothing in this subpart shall supercede or invalidate other Commission rules, such as the part 1 general competitive bidding rules (47 CFR part 1, subpart Q) or the service specific competitive bidding rules, as may be amended, regarding the Commission's rights, including but not limited to the Commission's right to cancel a license or authorization, obtain judgment, or collect interest, penalties, and administrative costs.

§ 1.1903 Use of procedures.

Procedures authorized by this regulation (including, but not limited to, disclosure to a consumer reporting agency, contracting for collection services, administrative offset and salary offset) may be used singly or in combination, so long as the requirements of applicable law and regulation are satisfied.

§ 1.1904 Conformance to law and regulations.

The requirements of applicable law (31 U.S.C. 3701–3719, as amended by Public Law 97–365, 96 Stat. 1749 and Public Law 104–134, 110 Stat. 1321, 1358) have been implemented in government-wide standards which include the Regulations of the Office of Personnel Management (5 CFR part 550) and the Federal Claims Collection Standards issued jointly by the Secretary of the Treasury and the Attorney General of the United States (31 CFR parts 900–904). Not every item in the previous sentence described standards has been incorporated or referenced in this regulation. To the extent, however, that circumstances arise which are not covered by the terms stated in these regulations, the Commission will proceed in any actions taken in accordance with applicable requirements found in the standards referred to in this section.

§ 1.1905 Other procedures; collection of forfeiture penalties.

Nothing contained in these regulations is intended to require the Commission to duplicate administrative or other proceedings required by contract or other laws or regulations, nor do these regulations supercede procedures permitted or required by other statutes or regulations. In particular, the assessment and collection of monetary forfeitures imposed by the Commission will be governed initially by the procedures prescribed by 47 U.S.C. 503, 504 and 47 CFR 1.80. After compliance with those procedures, the Commission may determine that the collection of a monetary forfeiture under the collection alternatives prescribed by this subpart is appropriate but need not duplicate administrative or other proceedings. Fees and penalties prescribed by law, *e.g.*, 47 U.S.C. 158 and 159, and promulgated under the authority of 47 U.S.C. 309(j) (*e.g.*, 47 CFR part 1, subpart Q) may be collected as permitted by applicable law. Nothing contained herein is intended to restrict the Commission from exercising any other right to recover or collect amounts owed to it.

§ 1.1906 Informal action.

Nothing contained in these regulations is intended to preclude utilization of informal administrative actions or remedies which may be available (including, *e.g.*, Alternative Dispute Resolution), and/or for the Commission to exercise rights as agreed to among the parties in written agreements, including notes and security agreements.

§ 1.1907 Return of property or collateral.

Nothing contained in this regulation is intended to deter the Commission from exercising any other right under law or regulation or by agreement it may have or possess, or to exercise its authority and right as a regulator under the Communications Act of 1934, as amended, and the Commission's rules, and demanding the return of specific property or from demanding, as a non-exclusive alternative, either the return of property or the payment of its value or the amount due the United States under any agreement or Commission rule.

§ 1.1908 Omissions not a defense.

The failure or omission of the Commission to comply with any provision in this regulation shall not serve as a defense to any debtor.

§ 1.1909 [Reserved]

§ 1.1910 Effect of insufficient fee payments, delinquent debts, or debarment.

(a)(1) An application (including a petition for reconsideration or any application for review of a fee determination) or request for authorization subject to the FCC Registration Number (FRN) requirement set forth in subpart W of this chapter will be examined to determine if the applicant has paid the appropriate application fee, appropriate regulatory fees, is delinquent in its debts owed the Commission, or is debarred from receiving Federal benefits (*see*, *e.g.*, 31 CFR 285.13; 47 CFR part 1, subpart P).

(2) Fee payments, delinquent debt, and debarment will be examined based on the entity's taxpayer identifying number (TIN), supplied when the entity acquired or was assigned an FRN. *See* 47 CFR 1.8002(b)(1).

(b)(1) Applications by any entity found not to have paid the proper application or regulatory fee will be handled pursuant to the rules set forth in 47 CFR part 1, subpart G.

(2) Action will be withheld on applications, including on a petition for reconsideration or any application for review of a fee determination, or requests for authorization by any entity found to be delinquent in its debt to the Commission (see § 1.1901(j)), unless otherwise provided for in this regulation, *e.g.*, 47 CFR 1.1928 (employee petition for a hearing). The entity will be informed that action will be withheld on the application until full payment or arrangement to pay any non-tax delinquent debt owed to the Commission is made and/or that the application may be dismissed. See the provisions of §§ 1.1108, 1.1109, 1.1116 and 1.1118. Any Commission action taken prior to the payment of delinquent non-tax debt owed to the Commission is contingent and subject to rescission. Failure to make payment on any delinquent debt is subject to collection of the debt, including interest thereon, any associated penalties, and the full cost of collection to the Federal government pursuant to the provisions of the Debt Collection Improvement Act, 31 U.S.C. 3717.

(2) If a delinquency has not been paid or the debtor has not made other satisfactory arrangements within 30 days of the date of the notice provided pursuant to paragraph (b)(2) of this section, the application or request for authorization will be dismissed.

(3) The provisions of paragraphs (b)(2) and (b)(3) of this section will not apply if the applicant has timely filed a challenge through an administrative appeal or a contested judicial proceeding either to the existence or amount of the non-tax delinquent debt owed the Commission.

(4) The provisions of paragraphs (b)(2) and (b)(3) of this section will not apply where more restrictive rules govern treatment of delinquent debtors, such as 47 CFR 1.2105(a)(2)(x) and (xi).

(c)(1) Applications for emergency or special temporary authority involving safety of life or property (including national security emergencies) or involving a brief transition period facilitating continuity of service to a substantial number of customers or end users, will not be subject to the provisions of paragraphs (a) and (b) of this section. However, paragraphs (a) and (b) of this section will be applied to permanent authorizations for these services.

(2) Provisions of paragraph (a) and (b) of this section will not apply to application or requst for authorization to which 11 U.S.C. 525(a) is applicable.

§ 1.1911 Demand for payment.

(a) Written demand as described in paragraph (b) of this section, and which may be in the form of a letter, order, memorandum, or other form of written communication, will be made promptly upon a debtor of the United States in terms that inform the debtor of the consequences of failing to cooperate to resolve the debt. The specific content, timing, and number of demand letters depend upon the type and amount of the debt, including, *e.g.*, any notes and the terms of agreements of the parties, and the debtor's response, if any, to the Commission's letters or telephone calls. One demand letter will be deemed sufficient. In determining the timing of the demand letter(s), the Commission will give due regard to the need to refer debts promptly to the Department of Justice for litigation, in accordance with the FCCS. When necessary to protect the Government's interest (for example, to prevent the expiration of a statute of limitations), written demand may be preceded by other appropriate actions under the FCCS, including immediate referral for litigation. The demand letter does not provide an additional period within to challenge the existence of, or amount of the non-tax debt if such time period has expired under Commission rules or other applicable limitation periods. Nothing contained herein is intended to limit the Commission's authority or discretion as may otherwise be permitted to collect debts owed.

(b) The demand letter will inform the debtor of:

(1) The basis for the indebtedness and the opportunities, if any, of the debtor to request review within the Commission;

(2) The applicable standards for assessing any interest, penalties, and administrative costs (§§1.1940 and 1.1941);

(3) The date by which payment is to be made to avoid late charges and enforced collection, which normally will not be more than 30 days from the date that the initial demand letter was mailed or hand-delivered; and

(4) The name, address, and phone number of a contact person or office within the Commission.

(c) The Commission will expend all reasonable effort to ensure that demand letters are mailed or hand-delivered on the same day that they are dated. As provided for in any agreement among parties, or as may be required by exigent circumstances, the Commission may use other forms of delivery, including, *e.g.*, facsimile telecopier or electronic mail. There is no prescribed format for demand letters. The Commission utilizes demand letters and procedures that will lead to the earliest practicable determination of whether the debt can be resolved administratively or must be referred for litigation.

(d) The Commission may, as circumstances and the nature of the debt permit, include in demand letters such items as the Commission's willingness to discuss alternative methods of payment; its policies with respect to the use of credit bureaus, debt collection centers, and collection agencies; the Commission's remedies to enforce payment of the debt (including assessment of interest, administrative costs and penalties, administrative garnishment, the use of collection agencies, Federal salary offset, tax refund offset, administrative offset, and litigation); the requirement that any debt delinquent for more than 180 days be transferred to the Department of the Treasury for collection; and, depending on applicable statutory authority, the debtor's entitlement to consideration of a waiver. Where applicable, the debtor will be provided with a period of time (normally not more than 15 calendar days) from the date of the demand in which to exercise the opportunity to request a review.

(e) The Commission will respond promptly to communications from the debtor, within 30 days whenever feasible, and will advise debtors who dispute the debt that they must furnish available evidence to support their contentions.

(f) Prior to the initiation of the demand process or at any time during or after completion of the demand process, if the Commission determines to pursue, or is required to pursue, offset, the procedures applicable to offset in §§1.1912 and 1.1913, as applicable, will be followed. The availability of funds or money for debt satisfaction by offset and the Commission's determination to pursue collection by offset shall release the Commission from the necessity of further compliance with paragraphs (a), (b), (c), and (d) of this section.

(g) Prior to referring a debt for litigation, the Commission will advise each person determined to be liable for the debt that, unless the debt can be collected administratively, litigation may be initiated. This notification will follow the requirements of Executive Order 12988 (3 CFR, 1996 Comp., pp. 157–163) and may be given as part of a demand letter under paragraph (b) of this section or in a separate document. Litigation counsel for the Government will be advised that this notice has been given.

(h) When the Commission learns that a bankruptcy petition has been filed with respect to a debtor, before proceeding with further collection action, the Commission may immediately seek legal advice from its counsel concerning the impact of the Bankruptcy Code on any pending or contemplated collection activities. Unless the Commission determines that the automatic stay imposed at the time of filing pursuant to 11 U.S.C. 362 has been lifted or is no longer in effect, in most cases collection activity against the debtor should stop immediately.

(1) After seeking legal advice, a proof of claim will be filed in most cases with the bankruptcy court or the Trustee. The Commission will refer to the provisions of 11 U.S.C. 106 relating to the consequences on sovereign immunity of filing a proof of claim.

(2) If the Commission is a secured creditor, it may seek relief from the automatic stay regarding its security, subject to the provisions and requirements of 11 U.S.C. 362.

(3) Offset is stayed in most cases by the automatic stay. However, the Commission will determine from its counsel whether its payments to the debtor and payments of other agencies available for offset may be frozen by the

Commission until relief from the automatic stay can be obtained from the bankruptcy court. The Commission will also determine from its counsel whether recoupment is available.

§ 1.1912 Collection by administrative offset.

(a) *Scope.* (1) The term *administrative offset* has the meaning provided in § 1.1901.

(2) This section does not apply to:

(i) Debts arising under the Social Security Act, except as provided in 42 U.S.C. 404;

(ii) Payments made under the Social Security Act, except as provided for in 31 U.S.C. 3716(c) (see 31 CFR 285.4, Federal Benefit Offset);

(iii) Debts arising under, or payments made under, the Internal Revenue Code (see 31 CFR 285.2, Tax Refund Offset) or the tariff laws of the United States;

(iv) Offsets against Federal salaries to the extent these standards are inconsistent with regulations published to implement such offsets under 5 U.S.C. 5514 and 31 U.S.C. 3716 (see 5 CFR part 550, subpart K, and 31 CFR 285.7, Federal Salary Offset);

(v) Offsets under 31 U.S.C. 3728 against a judgment obtained by a debtor against the United States;

(vi) Offsets or recoupments under common law, State law, or Federal statutes specifically prohibiting offsets or recoupments of particular types of debts; or

(vii) Offsets in the course of judicial proceedings, including bankruptcy.

(3) Unless otherwise provided for by contract or law, debts or payments that are not subject to administrative offset under 31 U.S.C. 3716 may be collected by administrative offset under the common law or other applicable statutory authority.

(4) Unless otherwise provided by law, administrative offset of payments under the authority of 31 U.S.C. 3716 to collect a debt may not be conducted more than 10 years after the Government's right to collect the debt first accrued, unless facts material to the Government's right to collect the debt were not known and could not reasonably have been known by the official or officials of the Government who were charged with the responsibility to discover and collect such debts. This limitation does not apply to debts reduced to a judgment.

(5) In bankruptcy cases, the Commission will seek legal advice from its counsel concerning the impact of the Bankruptcy Code, particularly 11 U.S.C. 106, 362, and 553, on pending or contemplated collections by offset.

(b) *Mandatory centralized administrative offset.* (1) The Commission is required to refer past due, legally enforceable nontax debts which are over 180 days delinquent to the Treasury for collection by centralized administrative offset. Debts which are less than 180 days delinquent also may be referred to the Treasury for this purpose. *See* FCCS for debt certification requirements.

(2) The names and taxpayer identifying numbers (TINs) of debtors who owe debts referred to the Treasury as described in paragraph (b)(1) of this section shall be compared to the names and TINs on payments to be made by Federal disbursing officials. Federal disbursing officials include disbursing officials of Treasury, the Department of Defense, the United States Postal Service, other Government corporations, and disbursing officials of the United States designated by the Treasury. When the name and TIN of a debtor match the name and TIN of a payee and all other requirements for offset have been met, the payment will be offset to satisfy the debt.

(3) Federal disbursing officials will notify the debtor/payee in writing that an offset has occurred to satisfy, in part or in full, a past due, legally enforceable delinquent debt. The notice shall include a description of the type and amount of the payment from which the offset was taken, the amount of offset that was taken, the identity of the creditor agency requesting the offset, and a contact point within the creditor agency who will respond to questions regarding the offset.

(4)(i) Before referring a delinquent debt to the Treasury for administrative offset, and subject to any agreement and/or waiver to the contrary by the debtor, the Commission shall ensure that offsets are initiated only after the debtor:

(A) Has been sent written notice of the type and amount of the debt, the intention of the Commission to use administrative offset to collect the debt, and an explanation of the debtor's rights under 31 U.S.C. 3716; and

(B) The debtor has been given:

(*1*) The opportunity to request within 15 days of the date of the written notice, after which opportunity is deemed waived, by the debtor, to inspect and copy Commission records related to the debt;

(*2*) The opportunity, unless otherwise waived by the debtor, for a review within the Commission of the determination of indebtedness; and

(*3*) The opportunity to request within 15 days of the date of the written notice, after which the opportunity is deemed waived by the debtor, for the debtor to make a written agreement to repay the debt.

(ii) The Commission may omit the procedures set forth in paragraph (a)(4)(i) of this section when:

(A) The offset is in the nature of a recoupment;

(B) The debt arises under a contract as set forth in *Cecile Industries, Inc.* v. *Cheney,* 995 F.2d 1052 (Fed. Cir. 1993) (notice and other procedural protections set forth in 31 U.S.C. 3716(a) do not supplant or restrict established procedures for contractual offsets accommodated by the Contracts Disputes Act); or

(C) In the case of non-centralized administrative offsets conducted under paragraph (c) of this section, the Commission first learns of the existence of the amount owed by the debtor when there is insufficient time before payment would be made to the debtor/payee to allow for prior notice and an opportunity for review. When prior notice and an opportunity for review are omitted, the Commission shall give the debtor such notice and an opportunity for review as soon as practicable and shall promptly refund any money ultimately found not to have been owed to the Government.

(iii) When the Commission previously has given a debtor any of the required notice and review opportunities with respect to a particular debt (*see* 31 CFR 901.2), the Commission need not duplicate such notice and review opportunities before administrative offset may be initiated.

(5) Before the Commission refers delinquent debts to the Treasury, the Office of Managing Director must certify, in a form acceptable to the Treasury, that:

(i) The debt(s) is (are) past due and legally enforceable; and

(ii) The Commission has complied with all due process requirements under 31 U.S.C. 3716(a) and its regulations.

(6) Payments that are prohibited by law from being offset are exempt from centralized administrative offset. The Treasury shall exempt payments under means-tested programs from centralized administrative offset when requested in writing by the head of the payment certifying or authorizing agency. Also, the Treasury may exempt other classes of payments from centralized offset upon the written request of the head of the payment certifying or authorizing agency.

(7) Benefit payments made under the Social Security Act (42 U.S.C. 301 *et seq.*), part B of the Black Lung Benefits Act (30 U.S.C. 921 *et seq.*), and any law administered by the Railroad Retirement Board (other than tier 2 benefits), may

be offset only in accordance with Treasury regulations, issued in consultation with the Social Security Administration, the Railroad Retirement Board, and the Office of Management and Budget. *See* 31 CFR 285.4.

(8) In accordance with 31 U.S.C. 3716(f), the Treasury may waive the provisions of the Computer Matching and Privacy Protection Act of 1988 concerning matching agreements and post-match notification and verification (5 U.S.C. 552a(o) and (p)) for centralized administrative offset upon receipt of a certification from a creditor agency that the due process requirements enumerated in 31 U.S.C. 3716(a) have been met. The certification of a debt in accordance with paragraph (b)(5) of this section will satisfy this requirement. If such a waiver is granted, only the Data Integrity Board of the Department of the Treasury is required to oversee any matching activities, in accordance with 31 U.S.C. 3716(g). This waiver authority does not apply to offsets conducted under paragraphs (c) and (d) of this section.

(c) *Non-centralized administrative offset.* (1) Generally, non-centralized administrative offsets are ad hoc case-by-case offsets that the Commission conducts, at the Commission's discretion, internally or in cooperation with the agency certifying or authorizing payments to the debtor. Unless otherwise prohibited by law, when centralized administrative offset is not available or appropriate, past due, legally enforceable nontax delinquent debts may be collected through non-centralized administrative offset. In these cases, a creditor agency may make a request directly to a payment-authorizing agency to offset a payment due a debtor to collect a delinquent debt. For example, it may be appropriate for a creditor agency to request that the Office of Personnel Management (OPM) offset a Federal employee's lump-sum payment upon leaving Government service to satisfy an unpaid advance.

(2) The Commission will make reasonable effort to ensure that such offsets may occur only after:

(i) The debtor has been provided due process as set forth in paragraph (b)(4) of this section (subject to any waiver by the debtor); and

(ii) The payment authorizing agency has received written certification from the Commission that the debtor owes the past due, legally enforceable delinquent debt in the amount stated, and that the creditor agency has fully complied with its regulations concerning administrative offset.

(3) Payment authorizing agencies shall comply with offset requests by creditor agencies to collect debts owed to the United States, unless the offset would not be in the best interests of the United States with respect to the program of the payment authorizing agency, or would otherwise be contrary to law. Appropriate use should be made of the cooperative efforts of other agencies in effecting collection by administrative offset.

(4) When collecting multiple debts by non-centralized administrative offset, agencies should apply the recovered amounts to those debts in accordance with the best interests of the United States, as determined by the facts and circumstances of the particular case, particularly the applicable statute of limitations.

§ 1.1913 Administrative offset against amounts payable from Civil Service Retirement and Disability Fund.

Upon providing the Office of Personnel Management (OPM) with written certification that a debtor has been afforded the procedures provided in § 1.1912(b)(4), the Commission may request OPM to offset a debtor's anticipated or future benefit payments under the Civil Service Retirement and Disability Fund (Fund) in accordance with regulations codified at 5 CFR 831.1801–831.1808. Upon receipt of such a request, OPM will identify and ''flag'' a debtor's account in anticipation of the time when the debtor requests, or becomes eligible to receive, payments from the Fund. This will satisfy any requirement that offset be initiated prior to the expiration of the time limitations referenced in § 1.1914(a)(4).

§ 1.1914 Collection in installments.

(a) Subject to the Commission's rules pertaining to the installment loan program (*see e.g.*, 47 CFR § 1.2110(g)), subpart Q or other agreements among the parties, the terms of which will control, whenever feasible, the Commission shall collect the total amount of a debt in one lump sum. If a debtor is financially unable to pay a debt in one lump sum, the Commission, in its sole discretion, may accept payment in regular installments. The Commission will obtain financial statements from debtors who represent that they are unable to pay in one lump sum and which are able to verify independently such representations (*see* 31 CFR 902.2(g)). The Commission will require and obtain a legally enforceable written agreement from the debtor that specifies all of the terms of the arrangement, including, as appropriate, sureties and other indicia of creditworthiness (*see* Federal Credit Reform Act of 1990, 2 U.S.C. 661, *et seq.*, OMB Circular A–129), and that contains a provision accelerating the debt in the event of default.

(b) The size and frequency of installment payments should bear a reasonable relation to the size of the debt and the debtor's ability to pay. If possible, the installment payments will be sufficient in size and frequency to liquidate the debt in three years or less.

(c) Security for deferred payments will be obtained in appropriate cases. The Commission may accept installment payments notwithstanding the refusal of the debtor to execute a written agreement or to give security, at the Commission's option.

(d) The Commission may deny the extension of credit to any debtor who fails to provide the records requested or fails to show an ability to pay the debt.

§ 1.1915 Exploration of compromise.

The Commission may attempt to effect compromise, preferably during the course of personal interviews, in accordance with the standards set forth in part 902 of the Federal Claims Collection Standards (31 CFR part 902). The Commission will also consider a request submitted by the debtor to compromise the debt. Such requests should be submitted in writing with full justification of the offer and addressing the bases for compromise at 31 CFR 902.2. Debtors will provide full financial information to support any request for compromise based on the debtor's inability to pay the debt. Unless otherwise provided by law, when the principal balance of a debt, exclusive of interest, penalties, and administrative costs, exceeds $100,000 or any higher amount authorized by the Attorney General, the authority to accept the compromise rests with the Department of Justice. The Commission will evaluate an offer, using the factors set forth in 31 CFR 902.2 and, as appropriate, refer the offer with the appropriate financial information to the Department of Justice. Department of Justice approval is not required if the Commission rejects a compromise offer.

§ 1.1916 Suspending or terminating collection action.

The suspension or termination of collection action shall be made in accordance with the standards set forth in part 903 of the Federal Claims Collection Standards (31 CFR part 903).

§ 1.1917 Referrals to the Department of Justice and transfer of delinquent debt to the Secretary of Treasury.

(a) Referrals to the Department of Justice shall be made in accordance with the standards set forth in part 904

of the Federal Claims Collection Standards (31 CFR part 904).

(b) The DCIA includes separate provisions governing the requirements that the Commission transfer delinquent debts to Treasury for general collection purposes (cross-servicing) in accordance with 31 U.S.C. 3711(g)(1) and (2), and notify Treasury of delinquent debts for the purpose of administrative offset in accordance with 31 U.S.C. 3716(c)(6). Title 31, U.S.C. 3711(g)(1) requires the Commission to transfer to Treasury all collection activity for a given debt. Under section 3711(g), Treasury will use all appropriate debt collection tools to collect the debt, including referral to a designated debt collection center or private collection agency, and administrative offset. Once a debt has been transferred to Treasury pursuant to the procedures at 31 CFR 285.12, the Commission will cease all collection activity related to that debt.

(c) All non-tax debts of claims owed to the Commission that have been delinquent for a period of 180 days shall be transferred to the Secretary of the Treasury. Debts which are less than 180 days delinquent may also be referred to the Treasury. Upon such transfer the Secretary of the Treasury shall take appropriate action to collect or terminate collection actions on the debt or claim. A debt is past-due if it has not been paid by the date specified in the Commission's initial written demand for payment or applicable agreement or instrument (including a post-delinquency payment agreement) unless other satisfactory payment arrangements have been made.

§ 1.1918 Use of consumer reporting agencies.

(a) The term *individual* means a natural person, and the term *consumer reporting agency* has the meaning provided in the Federal Claims Collection Act, as amended, 31 U.S.C. 3701(a)(3) or the Fair Credit Reporting Act, 15 U.S.C. 168a(f).

(b) The Commission may disclose to a consumer reporting agency, or provide information to the Treasury who may disclose to a consumer reporting agency from a system of records, information that an individual is responsible for a claim. System information includes, for example, name, taxpayer identification number, business and home address, business and home telephone numbers, the amount of the debt, the amount of unpaid principle, the late period, and the payment history. Before the Commission reports the information, it will:

(1) Provide notice required by section 5 U.S.C. 552a(e)(4) that information in the system may be disclosed to a consumer reporting agency;

(2) Review the claim to determine that it is valid and overdue;

(3) Make reasonable efforts using information provided by the debtor in Commission files to notify the debtor, unless otherwise specified under the terms of a contract or agreement—

(i) That payment of the claim is overdue;

(ii) That, within not less than 60 days from the date of the notice, the Commission intends to disclose to a consumer reporting agency that the individual is responsible for that claim;

(iii) That information in the system of records may be disclosed to the consumer reporting agency; and

(iv) That unless otherwise specified and agreed to in an agreement, contract, or by the terms of a note and/or security agreement, or that the debt arises from the nonpayment of a Commission fee, penalty, or other statutory or regulatory obligations, the individual will be provided with an explanation of the claim, and, as appropriate, procedures to dispute information in the records of the agency about the claim, and to administrative appeal or review of the claim; and

(4) Review Commission records to determine that the individual has not—

(i) Repaid or agreed to repay the claim under a written repayment plan agreed to and signed by both the individual and the Commission's representative; or, if eligible; and

(ii) Filed for review of the claim under paragraph (g) of this section;

(c) The Commission shall: (1) Disclose to each consumer reporting agency to which the original disclosure was made a substantial change in the condition or amount of the claim;

(2) Verify or correct promptly information about the claim, on request of a consumer reporting agency for verification of any or all information so disclosed; and

(3) Obtain assurances from each consumer reporting agency that they are complying with all laws of the United States relating to providing consumer credit information.

(d) The Commission shall ensure that information disclosed to the consumer reporting agency is limited to—

(1) Information necessary to establish the identity of the individual, including name, address, and taxpayer identification number;

(2) The amount, status, and history of the claim; and

(3) The agency or program under which the claim arose.

(e) All accounts in excess of $100 that have been delinquent more than 31 days will normally be referred to a consumer reporting agency.

(f) Under the same provisions as described in paragraph (b) of this section, the Commission may disclose to a credit reporting agency, information relating to a debtor other than a natural person. Such commercial debt accounts are not covered by the Privacy Act. Moreover, commercial debt accounts are subject to the Commission's rules concerning debt obligation, including part 1 rules related to auction debt, and the agreements of the parties.

§ 1.1919 Contracting for collection services.

(a) Subject to the provisions of paragraph (b) of this section, the Commission may contract with private collection contractors, as defined in 31 U.S.C. 3701(f), to recover delinquent debts. In that regard, the Commission:

(1) Retains the authority to resolve disputes, compromise debts, suspend or terminate collection activity, and refer debts for litigation;

(2) Restricts the private collection contractor from offering, as an incentive for payment, the opportunity to pay the debt less the private collection contractor's fee unless the Commission has granted such authority prior to the offer;

(3) Specifically requires, as a term of its contract with the private collection contractor, that the private collection contractor is subject to the Privacy Act of 1974 to the extent specified in 5 U.S.C. 552a(m), and to applicable Federal and state laws and regulations pertaining to debt collection practices, including but not limited to the Fair Debt Collection Practices Act, 15 U.S.C. 1692; and

(4) The private collection contractor is required to account for all amounts collected.

(b) Although the Commission will use government-wide debt collection contracts to obtain debt collection services provided by private collection contractors, the Commission may refer debts to private collection contractors pursuant to a contract between the Commission and the private collection contractor in those situations where the Commission is not required to transfer debt to the Secretary of the Treasury for debt collection.

(c) Agencies may fund private collection contractor in accordance with 31 U.S.C. 3718(d), or as otherwise permitted by law.

(d) The Commission may enter into contracts for locating and recovering assets of the United States, such as unclaimed assets, but it will first establish procedures that are acceptable

to Treasury before entering into contracts to recover assets of the United States held by a state government or a financial institution.

(e) The Commission may enter into contracts for debtor asset and income search reports. In accordance with 31 U.S.C. 3718(d), such contracts may provide that the fee a contractor charges the Commission for such services may be payable from the amounts recovered, unless otherwise prohibited by statute. In that regard, fees for those services will be added to the amount collected and are part of the administrative collection costs passed on to the debtor. *See* § 1.1940.

§§ 1.1920 through 1.1924 [Reserved]

§ 1.1925 Purpose.

Sections 1.1925 through 1.1939 apply to individuals who are employees of the Commission and provides the standards to be followed by the Commission in implementing 5 U.S.C. 5514; sec. 8(1) of E.O. 11609 (3 CFR, 1971–1975 Comp., p.586); redesignated in sec. 2–1 of E.O. 12107 (3 CFR, 1978 Comp., p.264) to recover a debt from the pay account of a Commission employee. It also establishes procedural guidelines to recover debts when the employee's creditor and paying agencies are not the same.

§ 1.1926 Scope.

(a) *Coverage.* This section applies to the Commission and employees as defined by § 1.1901.

(b) *Applicability.* This section and 5 U.S.C. 5514 apply in recovering certain debts by offset, except where the employee consents to the recovery, from the current pay account of that employee. Because it is an administrative offset, debt collection procedures for salary offset which are not specified in 5 U.S.C. 5514 and these regulations should be consistent with the provisions of the Federal Claims Collection Standards (31 CFR parts 900–904).

(1) *Excluded debts or claims.* The procedures contained in this section do not apply to debts or claims arising under the Internal Revenue Code of 1954, as amended (26 U.S.C. 1 *et seq.*), the Social Security Act (42 U.S.C. 301 *et seq.*) or the tariff laws of the United States, or to any case where collection of a debt by salary offset is explicitly provided for or prohibited by another statute (*e.g.* travel advances in 5 U.S.C. 5705 and employee training expenses in 5 U.S.C. 4108).

(2) Section 1.1926 does not preclude an employee from requesting waiver of an erroneous payment under 5 U.S.C. 5584, 10 U.S.C. 2774, or 32 U.S.C. 716, or in any way questioning the amount or validity of a debt, in the manner prescribed by the Commissioner. Similarly, this subpart does not preclude an employee from requesting waiver of the collection of a debt under any other applicable statutory authority.

(c) *Time limit.* Under 31 CFR 901.3(a)(4) offset may not be initiated more than 10 years after the Government's right to collect the debt first accrued, unless an exception applies as stated in section 901.3(a)(4).

§ 1.1927 Notification.

(a) Salary offset deductions will not be made unless the Managing Director of the Commission, or the Managing Director's designee, provides to the employee at least 30 days before any deduction, written notice stating at a minimum:

(1) The Commission's determination that a debt is owed, including the origin, nature, and amount of the debt;

(2) The Commission's intention to collect the debt by means of deduction from the employee's current disposable pay account;

(3) The frequency and amount of the intended deduction (stated as a fixed dollar amount or as a percentage of pay, not to exceed 15 percent of disposable pay) and the intention to continue the deductions until the debt is paid in full or otherwise resolved;

(4) An explanation of the Commission's policy concerning interest, penalties, and administrative costs (*See* §§ 1.1940 and 1.1941), a statement that such assessments must be made unless excused in accordance with the FCCS;

(5) The employee's right to inspect and copy Government records relating to the debt or, if the employee or his or her representative cannot personally inspect the records, to request and receive a copy of such records.

(6) If not previously provided, the opportunity (under terms agreeable to the Commission) to establish a schedule for the voluntary repayment of the debt or to enter into a written agreement to establish a schedule for repayment of the debt in lieu of offset. The agreement must be in writing, signed by both the employee and the Managing Director (or designee) of the Commission and documented in Commission files (see the FCCS).

(7) The employee's right to a hearing conducted by an official arranged by the Commission (an administrative law judge, or alternatively, a hearing official not under the control of the head of the Commission) if a petition is filed as prescribed by this subpart.

(8) The method and time period for petitioning for a hearing;

(9) That the timely filing of a petition for hearing will stay the commencement of collection proceedings;

(10) That the final decision in the hearing (if one is requested) will be issued at the earliest practical date, but not later than 60 days after the filing of the petition requesting the hearing unless the employee requests and the hearing official grants a delay in the proceedings;

(11) That any knowingly false, misleading, or frivolous statements, representations, or evidence may subject the employee to:

(i) Disciplinary procedures appropriate under Chapter 75 of title 5, U.S.C., part 752 of title 5, Code of Federal Regulations, or any other applicable statutes or regulations.

(ii) Penalties under the False Claims Act sections 3729–3731 of title 31, U.S.C., or any other applicable statutory authority; or

(iii) Criminal penalties under sections 286, 287, 1001, and 1002 of title 18, U.S.C., or any other applicable statutory authority.

(12) Any other rights and remedies available to the employee under statutes or regulations governing the program for which the collection is being made; and

(13) Unless there are applicable contractual or statutory provisions to the contrary, that amounts paid on or deducted for the debt which are later waived or found not owed to the United States will be promptly refunded to the employee.

(b) Notifications under this section shall be hand delivered with a record made of the date of delivery, or shall be mailed by certified mail, return receipt requested.

(c) No notification, hearing, written responses or final decisions under this regulation are required by the Commission for:

(1) Any adjustment to pay arising out of an employee's election of coverage, or change in coverage, under a Federal benefit program requiring periodic deductions from pay, if the amount to be recovered was accumulated over four pay periods or less;

(2) A routine intra-Commission adjustment of pay that is made to correct an overpayment of pay attributable to clerical or administrative errors or delays in processing pay documents, if the overpayment occurred within the four pay periods preceding the adjustment, or as soon thereafter as practical, the individual is provided written notice of the nature and the amount of the adjustment and point of

contact for contesting such adjustment; or

(3) Any adjustment to collect a debt amounting to $50 or less, if, at the time of such adjustment, or as soon thereafter as practical, the individual is provided written notice of the nature and the amount of the adjustment and a point of contact for contesting such adjustment.

§ 1.1928 Hearing.

(a) *Petition for hearing.* (1) An employee may request a hearing by filing a written petition with the Managing Director of the Commission, or designated official stating why the employee believes the determination of the Commission concerning the existence or the amount of the debt is in error.

(2) The employee's petition must be executed under penalty of perjury by the employee and fully identify and explain with reasonable specificity all the facts, evidence and witnesses, if any, which the employee believes support his or her position.

(3) The petition must be filed no later than fifteen (15) calendar days from the date that the notification was hand delivered or the date of delivery by certified mail, return receipt requested.

(4) If a petition is received after the fifteenth (15) calendar day deadline referred to paragraph (a) (3) of this section, the Commission will nevertheless accept the petition if the employee can show, in writing, that the delay was due to circumstances beyond his or her control, or because of failure to receive notice of the time limit (unless otherwise aware of it).

(5) If a petition is not filed within the time limit specified in paragraph (a) (3) of this section, and is not accepted pursuant to paragraph (a)(4) of this section, the employee's right to hearing will be considered waived, and salary offset will be implemented by the Commission.

(b) *Type of hearing.* (1) The form and content of the hearing will be determined by the hearing official who shall be a person outside the control or authority of the Commission except that nothing herein shall be construed to prohibit the appointment of an administrative law judge by the Commission. In determining the type of hearing, the hearing officer will consider the nature and complexity of the transaction giving rise to the debt. The hearing may be conducted as an informal conference or interview, in which the Commission and employee will be given a full opportunity to present their respective positions, or as a more formal proceeding involving the presentation of evidence, arguments and written submissions.

(2) The employee may represent him or herself, or may be represented by an attorney.

(3) The hearing official shall maintain a summary record of the hearing.

(4) The decision of the hearing officer shall be in writing, and shall state:

(i) The facts purported to evidence the nature and origin of the alleged debt;

(ii) The hearing official's analysis, findings, and conclusions, in the light of the hearing, as to—

(A) The employee's and/or agency's grounds,

(B) The amount and validity of the alleged debt, and,

(C) The repayment schedule, if applicable.

(5) The decision of the hearing official shall constitute the final administrative decision of the Commission.

§ 1.1929 Deduction from employee's pay.

(a) Deduction by salary offset, from an employee's current disposable pay, shall be subject to the following conditions:

(1) Ordinarily, debts to the United States will be collected in full, in one lump sum. This will be done when funds are available for payment in one lump sum. However, if the employee is financially unable to pay in one lump sum or the amount of the debt exceeds 15 percent of disposable pay for an officially established pay interval, collection must be made in installments.

(2) The size of the installment deductions will bear a reasonable relationship to the size of the debt and the employee's ability to pay (*see* the FCCS). However, the installments will not exceed 15 percent of the disposable pay from which the deduction is made, unless the employee has agreed in writing to the deduction of a greater amount.

(3) Deduction will generally commence with the next full pay interval (ordinarily the next biweekly pay period) following the date: of the employee's written consent to salary offset, the waiver of hearing, or the decision issued by the hearing officer.

(4) Installment deductions will be pro-rated for a period not greater than the anticipated period of employment except as provided in §1.1930.

§ 1.1930 Liquidation from final check or recovery from other payment.

(a) If the employee retires or resigns or if his or her employment or period of active duty ends before collection of the debt is completed, offset of the entire remaining balance of the debt may be made from a final payment of any nature, including, but not limited to a final salary payment or lump-sum leave due the employee as the date of separation, to such extent as is necessary to liquidate the debt.

(b) If the debt cannot be liquidated by offset from a final payment, offset may be made from later payments of any kind due from the United States, including, but not limited to, the Civil Service Retirement and Disability Fund, pursuant to §1.1913.

§ 1.1931 Non-waiver of rights by payments.

An employee's involuntary payment of all or any portion of a debt being collected under 5 U.S.C. 5514 shall not be construed as a waiver of any rights which the employee may have under 5 U.S.C. 5514 or any other provision of contract or law, unless statutory or contractual provisions provide to the contrary.

§ 1.1932 Refunds.

(a) Refunds shall promptly be made when—(1) A debt is waived or otherwise found not owing to the United States (unless expressly prohibited by statute or regulation); or

(2) The employee's paying agency is directed by an administrative or judicial order to refund amounts deducted from his or her current pay.

(b) Refunds do not bear interest unless required or permitted by law or contract.

§ 1.1933 Interest, penalties and administrative costs.

The assessment of interest, penalties and administrative costs shall be in accordance with §§1.1940 and 1.1941.

§ 1.1934 Recovery when the Commission is not creditor agency.

(a) *Responsibilities of creditor agency.* Upon completion of the procedures established under 5 U.S.C. 5514, the creditor agency must do the following:

(1) Must certify, in writing, that the employee owes the debt, the amount and basis of the debt, the date on which payment(s) is due, the date of the Government's right to collect the debt first accrued, and that the creditor agency's regulations implementing 5 U.S.C. 5514 have been approved by OPM.

(2) If the collection must be made in installments, the creditor agency also must advise the Commission of the number of installments to be collected, the amount of each installment, and the commencement date of the first installment (if a date other than the next officially established pay period is required).

(3) Unless the employee has consented to the salary offset in writing

or signed a statement acknowledging receipt of the required procedures, and the written consent or statement is forwarded to the Commission, the creditor agency also must advise the Commission of the action(s) taken under 5 U.S.C. 5514(b) and give the date(s) the action(s) was taken.

(4) Except as otherwise provided in this paragraph, the creditor agency must submit a debt claim containing the information specified in paragraphs (a)(1) through (a)(3) of this section and an installment agreement (or other instruction on the payment schedule), if applicable to the Commission.

(5) If the employee is in the process of separating, the creditor agency must submit its claim to the Commission for collection pursuant to §1.1930. The Commission will certify the total amount of its collection and provide copies to the creditor agency and the employee as stated in paragraph (c)(1) of this section. If the Commission is aware that the employee is entitled to payments from the Civil Service Retirement and Disability Fund, or other similar payments, it must provide written notification to the agency responsible for making such payments that the debtor owes a debt (including the amount) and that there has been full compliance with the provisions of this section. However, the creditor agency must submit a properly certified claim to the agency responsible for making such payments before collection can be made.

(6) If the employee is already separated and all payments from the Commission have been paid, the creditor agency may request, unless otherwise prohibited, that money due and payable to the employee from the Civil Service Retirement and Disability Fund (5 CFR 831.1801 *et seq.*), or other similar funds, be administratively offset to collect the debt. (31 U.S.C. 3716 and 4 CFR 102.4)

(b) *Responsibilities of the Commission*—(1) *Complete claim.* When the Commission receives a properly certified debt claim from a creditor agency, deductions should be scheduled to begin prospectively at the next official established pay interval. The Commission will notify the employee that the Commission has received a certified debt claim from the creditor agency (including the amount) and written notice of the date deductions from salary will commence and of the amount of such deductions.

(2) *Incomplete claim.* When the Commission receives an incomplete debt claim from a creditor agency, the Commission will return the debt claim with a notice that procedures under 5 U.S.C. 5514 and this subpart must be provided, and a properly certified debt claim received, before action will be taken to collect from the employee's current pay account.

(3) *Review.* The Commission will not review the merits of the creditor agency's determination with respect to the amount or validity of the debt certified by the creditor agency.

(c) Employees who transfer from one paying agency to another. (1) If, after the creditor agency has submitted the debt claim to the Commission, the employee transfers to a position served by a different paying agency before the debt is collected in full, the Commission must certify the total amount of the collection made on the debt. One copy of the certification must be furnished to the employee, another to the creditor agency along with notice of employee's transfer. However, the creditor agency must submit a properly certified claim to the new paying agency before collection can be resumed.

(2) When an employee transfers to another paying agency, the creditor agency need not repeat the due process procedures described by 5 U.S.C. 5514 and this subpart to resume the collection. However, the creditor agency is responsible for reviewing the debt upon receiving the former paying agency's notice of the employee's transfer to make sure the collection is resumed by the new paying agency.

§ 1.1935 Obtaining the services of a hearing official.

(a) When the debtor does not work for the creditor agency and the creditor agency cannot provide a prompt and appropriate hearing before an administrative law judge or before a hearing official furnished pursuant to another lawful arrangement, the creditor agency may contact an agent of the Commission designated in Appendix A of 5 CFR part 581 for a hearing official, and the Commission will then cooperate as provided by the FCCS and provide a hearing official.

(b) When the debtor works for the creditor agency, the creditor agency may contact any agent (of another agency) designated in Appendix A of 5 CFR part 581 to arrange for a hearing official. Agencies must then cooperate as required by the FCCS and provide a hearing official.

(c) The determination of a hearing official designated under this section is considered to be an official certification regarding the existence and amount of the debt for purposes of executing salary offset under 5 U.S.C. 5514. A creditor agency may make a certification to the Secretary of the Treasury under 31 CFR 550.1108 or a paying agency under 31 CFR 550.1109 regarding the existence and amount of the debt based on the certification of a hearing official. If a hearing official determines that a debt may not be collected via salary offset, but the creditor agency finds that the debt is still valid, the creditor agency may still seek collection of the debt through other means, such as offset of other Federal payments, litigation, etc.

§ 1.1936 Administrative wage garnishment.

(a) *Purpose.* This section provides procedures for the Commission to collect money from a debtor's disposable pay by means of administrative wage garnishment to satisfy delinquent non-tax debt owed to the United States.

(b) *Scope.* (1) This section applies to Commission-administered programs that give rise to a delinquent nontax debt owed to the United States and to the Commission's pursuit of recovery of such debt.

(2) This section shall apply notwithstanding any provision of State law.

(3) Nothing in this section precludes the compromise of a debt or the suspension or termination of collection action in accordance with applicable law. See, for example, the Federal Claims Collection Standards (FCCS), 31 CFR parts 900 through 904.

(4) The receipt of payments pursuant to this section does not preclude the Commission from pursuing other debt collection remedies, including the offset of Federal payments to satisfy delinquent nontax debt owed to the United States. The Commission may pursue such debt collection remedies separately or in conjunction with administrative wage garnishment.

(5) This section does not apply to the collection of delinquent nontax debt owed to the Commission from the wages of Federal employees from their Federal employment. Federal pay is subject to the Federal salary offset procedures set forth in 5 U.S.C. 5514, §§ 1.1925 through 1.1935, and other applicable laws.

(6) Nothing in this section requires the Commission to duplicate notices or administrative proceedings required by contract or other laws or regulations.

(c) *Definitions.* In addition to the definitions set forth in § 1.1901 as used in this section, the following definitions shall apply:

(1) *Business day means Monday through Friday.* For purposes of computation, the last day of the period will be included unless it is a Federal legal holiday.

(2) *Certificate of service* means a certificate signed by a Commission official indicating the nature of the document to which it pertains, the date of mailing of the document, and to whom the document is being sent.

(3) *Day means calendar day.* For purposes of computation, the last day of the period will be included unless it is a Saturday, a Sunday, or a Federal legal holiday.

(4) *Disposable pay* means that part of the debtor's compensation (including, but not limited to, salary, bonuses, commissions, and vacation pay) from an employer remaining after the deduction of health insurance premiums and any amounts required by law to be withheld.

(5) *Amounts required by law to be withheld* include amounts for deductions such as social security taxes and withholding taxes, but do not include any amount withheld pursuant to a court order.

(6) *Employer* means a person or entity that employs the services of others and that pays their wages or salaries. The term employer includes, but is not limited to, State and local Governments, but does not include an agency of the Federal Government.

(7) *Garnishment* means the process of withholding amounts from an employee's disposable pay and the paying of those amounts to a creditor in satisfaction of a withholding order.

(8) *Withholding order* means any order for withholding or garnishment of pay issued by an agency, or judicial or administrative body. For purposes of this section, the terms ''wage garnishment order'' and ''garnishment order'' have the same meaning as ''withholding order.''

(d) *General rule.* Whenever the Commission determines that a delinquent debt is owed by an individual, the Commission may initiate proceedings administratively to garnish the wages of the delinquent debtor as governed by procedures prescribed by 31 CFR 285. Wage garnishment will usually be performed for the Commission by the Treasury as part of the debt collection processes for Commission debts referred to Treasury for further collection action.

(e) *Notice requirements.* (1) At least 30 days before the initiation of garnishment proceedings, the Commission shall mail, by first class mail, to the debtor's last known address a written notice informing the debtor of:

(i) The nature and amount of the debt;

(ii) The intention of the Commission to initiate proceedings to collect the debt through deductions from pay until the debt and all accumulated interest, penalties and administrative costs are paid in full; and

(iii) An explanation of the debtor's rights, including those set forth in paragraph (e)(2) of this section, and the time frame within which the debtor may exercise his or her rights.

(2) The debtor shall be afforded the opportunity:

(i) To inspect and copy agency records related to the debt;

(ii) To enter into a written repayment agreement with the Commission under terms agreeable to the Commission; and

(iii) For a hearing in accordance with paragraph (f) of this section concerning the existence or the amount of the debt or the terms of the proposed repayment schedule under the garnishment order. However, the debtor is not entitled to a hearing concerning the terms of the proposed repayment schedule if these terms have been established by written agreement under paragraph (e)(2)(ii) of this section.

(3) The Commission will keep a copy of a certificate of service indicating the date of mailing of the notice. The certificate of service may be retained electronically so long as the manner of retention is sufficient for evidentiary purposes.

(f) *Hearing.* Pursuant to 31 CFR 285.11(f)(1), the Commission hereby adopts by reference the hearing procedures of 31 CFR 285.11(f).

(g) *Wage garnishment order.* (1) Unless the Commission receives information that the Commission believes justifies a delay or cancellation of the withholding order, the Commission will send, by first class mail, a withholding order to the debtor's employer within 30 days after the debtor fails to make a timely request for a hearing (*i.e.*, within 15 business days after the mailing of the notice described in paragraph (e)(1) of this section), or, if a timely request for a hearing is made by the debtor, within 30 days after a final decision is made by the Commission to proceed with garnishment, or as soon as reasonably possible thereafter.

(2) The withholding order sent to the employer under paragraph (g)(1) of this section shall be in a form prescribed by the Secretary of the Treasury on the Commission's letterhead and signed by the head of the Commission or his/her delegate. The order shall contain only the information necessary for the employer to comply with the withholding order, including the debtor's name, address, and social security number, as well as instructions for withholding and information as to where payments should be sent.

(3) The Commission will keep a copy of a certificate of service indicating the date of mailing of the order. The certificate of service may be retained electronically so long as the manner of retention is sufficient for evidentiary purposes.

(h) *Certification by employer.* Along with the withholding order, the Commission shall send to the employer a certification in a form prescribed by the Secretary of the Treasury. The employer shall complete and return the certification to the Commission within the time frame prescribed in the instructions to the form addressing matters such as information about the debtor's employment status and disposable pay available for withholding.

(i) *Amounts withheld.* (1) After receipt of the garnishment order issued under this section, the employer shall deduct from all disposable pay paid to the applicable debtor during each pay period the amount of garnishment described in paragraph (i)(2) of this section.

(2) Subject to the provisions of paragraphs (i)(3) and (i)(4) of this section, the amount of garnishment shall be the lesser of:

(i) The amount indicated on the garnishment order up to 15% of the debtor's disposable pay; or

(ii) The amount set forth in 15 U.S.C. 1673(a)(2) (Restriction on Garnishment). The amount set forth at 15 U.S.C. 1673(a)(2) is the amount by which a debtor's disposable pay exceeds an amount equivalent to thirty times the minimum wage. See 29 CFR 870.10.

(3) When a debtor's pay is subject to withholding orders with priority the following shall apply:

(i) Unless otherwise provided by Federal law, withholding orders issued under this section shall be paid in the amounts set forth under paragraph (i)(2) of this section and shall have priority over other withholding orders which are served later in time. Notwithstanding the foregoing, withholding orders for family support shall have priority over withholding orders issued under this section.

(ii) If amounts are being withheld from a debtor's pay pursuant to a withholding order served on an employer before a withholding order issued pursuant to this section, or if a withholding order for family support is served on an employer at any time, the amounts withheld pursuant to the withholding order issued under this section shall be the lesser of:

(A) The amount calculated under paragraph (i)(2) of this section, or

(B) An amount equal to 25% of the debtor's disposable pay less the amount(s) withheld under the withholding order(s) with priority.

(iii) If a debtor owes more than one debt to the Commission, the Commission may issue multiple withholding orders provided that the total amount garnished from the debtor's pay for such orders does not exceed the amount set forth in paragraph (i)(2) of this section. For purposes of this paragraph (i)(3)(iii), the term *agency* refers to the Commission that is owed the debt.

(4) An amount greater than that set forth in paragraphs (i)(2) and (i)(3) of this section may be withheld upon the written consent of debtor.

(5) The employer shall promptly pay to the Commission all amounts withheld in accordance with the withholding order issued pursuant to this section.

(6) An employer shall not be required to vary its normal pay and disbursement cycles in order to comply with the withholding order.

(7) Any assignment or allotment by an employee of his earnings shall be void to the extent it interferes with or prohibits execution of the withholding order issued under this section, except for any assignment or allotment made pursuant to a family support judgment or order.

(8) The employer shall withhold the appropriate amount from the debtor's wages for each pay period until the employer receives notification from the Commission to discontinue wage withholding. The garnishment order shall indicate a reasonable period of time within which the employer is required to commence wage withholding.

(j) *Exclusions from garnishment.* The Commission may not garnish the wages of a debtor who it knows has been involuntarily separated from employment until the debtor has been reemployed continuously for at least 12 months. The debtor has the burden of informing the Commission of the circumstances surrounding an involuntary separation from employment.

(k) *Financial hardship.* (1) A debtor whose wages are subject to a wage withholding order under this section, may, at any time, request a review by the Commission of the amount garnished, based on materially changed circumstances such as disability, divorce, or catastrophic illness which result in demonstrated financial hardship.

(2) A debtor requesting a review under paragraph (k)(1) of this section shall submit the basis for claiming that the current amount of garnishment results in demonstrated financial hardship to the debtor, along with supporting documentation. The Commission will consider any information submitted; however, demonstrated financial hardship must be based on financial records that include Federal and state tax returns, affidavits executed under the pain and penalty of perjury, and, in the case of business-related financial hardship (*e.g.*, the debtor is a partner or member of a business-agency relationship) full financial statements (audited and/or submitted under oath) in accordance with procedures and standards established by the Commission.

(3) If a financial hardship is found, the Commission will downwardly adjust, by an amount and for a period of time agreeable to the Commission, the amount garnisheed to reflect the debtor's financial condition. The Commission will notify the employer of any adjustments to the amounts to be withheld.

(l) *Ending garnishment.* (1) Once the Commission has fully recovered the amounts owed by the debtor, including interest, penalties, and administrative costs consistent with the FCCS, the Commission will send the debtor's employer notification to discontinue wage withholding.

(2) At least annually, the Commission shall review its debtors' accounts to ensure that garnishment has been terminated for accounts that have been paid in full.

(m) *Actions prohibited by the employer.* An employer may not discharge, refuse to employ, or take disciplinary action against the debtor due to the issuance of a withholding order under this section.

(n) *Refunds.* (1) If a hearing official, at a hearing held pursuant to paragraph (f)(3) of this section, determines that a debt is not legally due and owing to the United States, the Commission shall promptly refund any amount collected by means of administrative wage garnishment.

(2) Unless required by Federal law or contract, refunds under this section shall not bear interest.

(o) *Right of action.* The Commission may sue any employer for any amount that the employer fails to withhold from wages owed and payable to an employee in accordance with paragraphs (g) and (i) of this section. However, a suit may not be filed before the termination of the collection action involving a particular debtor, unless earlier filing is necessary to avoid expiration of any applicable statute of limitations period. For purposes of this section, ''termination of the collection action'' occurs when the Commission has terminated collection action in accordance with the FCCS or other applicable standards. In any event, termination of the collection action will have been deemed to occur if the Commission has not received any payments to satisfy the debt from the particular debtor whose wages were subject to garnishment, in whole or in part, for a period of one (1) year.

§§ 1.1937 through 1.1939 [Reserved]

§ 1.1940 Assessment.

(a) Except as provided in paragraphs (g), (h), and (i) of this section or § 1.1941, the Commission shall charge interest, penalties, and administrative costs on debts owed to the United States pursuant to 31 U.S.C. 3717. The Commission will mail, hand-deliver, or use other forms of transmission, including facsimile telecopier service, a written notice to the debtor, at the debtor's CORES contact address (see section 1.8002(b)) explaining the Commission's requirements concerning these charges except where these requirements are included in a contractual or repayment agreement, or otherwise provided in the Commission's rules, as may be amended from time to time. These charges shall continue to accrue until the debt is paid in full or otherwise resolved through compromise, termination, or waiver of the charges. This provision is not intended to modify or limit the terms of any contract, note, or security agreement from the debtor, or to modify or limit the Commission's rights under its rules with regard to the notice or the parties' agreement to waive notice.

(b) The Commission shall charge interest on debts owed the United States as follows:

(1) Interest shall accrue from the date of delinquency, or as otherwise provided by the terms of any contract, note, or security agreement, regulation, or law.

(2) Unless otherwise established in a contract, note, or security agreement, repayment agreement, or by statute, the rate of interest charged shall be the rate established annually by the Treasury in accordance with 31 U.S.C. 3717. Pursuant to 31 U.S.C. 3717, an agency may charge a higher rate of interest if it reasonably determines that a higher rate is necessary to protect the rights of the United States. The agency should document the reason(s) for its determination that the higher rate is necessary.

(3) The rate of interest, as initially charged, shall remain fixed for the

duration of the indebtedness. When a debtor defaults on a repayment agreement and seeks to enter into a new agreement, the agency may require payment of interest at a new rate that reflects the current value of funds to the Treasury at the time the new agreement is executed. Interest shall not be compounded, that is, interest shall not be charged on interest, penalties, or administrative costs required by this section. If, however, a debtor defaults on a previous repayment agreement, charges that accrued but were not collected under the defaulted agreement shall be added to the principal under the new repayment agreement.

(c) The Commission shall assess administrative costs incurred for processing and handling delinquent debts. The calculation of administrative costs may be based on actual costs incurred or upon estimated costs as determined by the Commission. Commission administrative costs include the personnel and service costs (*e.g.*, telephone, copier, and overhead) to notify and collect the debt, without regard to the success of such efforts by the Commission.

(d) Unless otherwise established in a contract, repayment agreement, or by statute, the Commission will charge a penalty, pursuant to 31 U.S.C. 3717(e)(2), currently not to exceed six percent (6%) a year on the amount due on a debt that is delinquent for more than 90 days. This charge shall accrue from the date of delinquency. If the rate permitted under 31 U.S.C. 3717 is changed, the Commission will apply that rate.

(e) The Commission may increase an *administrative debt* by the cost of living adjustment in lieu of charging interest and penalties under this section. *Administrative debt* includes, but is not limited to, a debt based on fines, penalties, and overpayments, but does not include a debt based on the extension of Government credit, such as those arising from loans and loan guaranties. The cost of living adjustment is the percentage by which the Consumer Price Index for the month of June of the calendar year preceding the adjustment exceeds the Consumer Price Index for the month of June of the calendar year in which the debt was determined or last adjusted. Increases to administrative debts shall be computed annually. Agencies should use this alternative only when there is a legitimate reason to do so, such as when calculating interest and penalties on a debt would be extremely difficult because of the age of the debt.

(f) When a debt is paid in partial or installment payments, amounts received by the agency shall be applied first to outstanding penalties and administrative cost charges, second to accrued interest, and third to the outstanding principal.

(g) The Commission will waive the collection of interest and administrative charges imposed pursuant to this section on the portion of the debt that is paid within 30 days after the date on which interest began to accrue. The Commission will not extend this 30-day period except for good cause shown of extraordinary and compelling circumstances, completely documented and supported in writing, submitted and received before the expiration of the first 30-day period. The Commission may, on good cause shown of extraordinary and compelling circumstances, completely documented and supported in writing, waive interest, penalties, and administrative costs charged under this section, in whole or in part, without regard to the amount of the debt, either under the criteria set forth in these standards for the compromise of debts, or if the agency determines that collection of these charges is against equity and good conscience or is not in the best interest of the United States.

(h) The Commission retains the common law right to impose interest and related charges on debts not subject to 31 U.S.C. 3717.

§ 1.1941 Exemptions.

(a) The preceding sections of this part, to the extent they reflect remedies or procedures prescribed by the Debt Collection Act of 1982 and the Debt Collection Improvement Act of 1996, such as administrative offset, use of credit bureaus, contracting for collection agencies, and interest and related charges, do not apply to debts arising under, or payments made under, the Internal Revenue Code of 1986, as amended (26 U.S.C. 1 *et seq.*); the Social Security Act (42 U.S.C. 301 *et seq.*), except to the extent provided under 42 U.S.C. 404 and 31 U.S.C. 3716(c); or the tariff laws of the United States. These remedies and procedures, however, may be authorized with respect to debts that are exempt from the Debt Collection Act of 1982 and the Debt Collection Improvement Act of 1996, to the extent that they are authorized under some other statute or the common law.

(b) This section should not be construed as prohibiting the use of these authorities or requirements when collecting debts owed by persons employed by agencies administering the laws cited in paragraph (a) of this section unless the debt arose under those laws. However, the Commission is authorized to assess interest and related charges on debts which are not subject to 31 U.S.C. 3717 to the extent authorized under the common law or other applicable statutory authority.

§ 1.1942 Other sanctions.

The remedies and sanctions available to the Commission in this subpart are not exclusive. The Commission may impose other sanctions, where permitted by law, for any inexcusable, prolonged, or repeated failure of a debtor to pay such a claim. In such cases, the Commission will provide notice, as required by law, to the debtor prior to imposition of any such sanction.

§§ 1.1943 through 1.1949 [Reserved]

§ 1.1950 Reporting discharged debts to the Internal Revenue Service.

(a) In accordance with applicable provisions of the Internal Revenue Code and implementing regulations (26 U.S.C. 6050P; 26 CFR 1.6050P–1), when the Commission discharges a debt for less than the full value of the indebtedness, it will report the outstanding balance discharged, not including interest, to the Internal Revenue Service, using IRS Form 1099–C or any other form prescribed by the Service, when:

(1) The principle amount of the debt not in dispute is $600 or more; and

(2) The obligation has not been discharged in a bankruptcy proceeding; and

(3) The obligation is no longer collectible either because the time limit in the applicable statute for enforcing collection expired during the tax year, or because during the year a formal compromise agreement was reached in which the debtor was legally discharged of all or a portion of the obligation.

(b) The Treasury will prepare the Form 1099–C for those debts transferred to Treasury for collection and deemed uncollectible.

§ 1.1951 Offset against tax refunds.

The Commission will take action to effect administrative offset against tax refunds due to debtors under 26 U.S.C. 6402, in accordance with the provisions of 31 U.S.C. 3720A and Treasury Department regulations.

§ 1.1952 Use and disclosure of mailing addresses.

(a) When attempting to locate a debtor in order to collect or compromise a debt under this subpart or other authority, the Commission may send a request to the Secretary of the Treasury (or designee) to obtain a debtor's mailing

address from the records of the Internal Revenue Service.

(b) The Commission is authorized to use mailing addresses obtained under paragraph (a) of this section to enforce collection of a delinquent debt and may disclose such mailing addresses to other agencies and to collection agencies for collection purposes.

§ 1.1953 Interagency requests.

(a) Requests to the Commission by other Federal agencies for administrative or salary offset shall be in writing and forwarded to the Financial Operations Center, FCC, 445 12th Street, SW., Washington, DC 20554.

(b) Requests by the Commission to other Federal agencies holding funds payable to the debtor will be in writing and forwarded, certified return receipt, as specified by that agency in its regulations. If the agency's rules governing this matter are not readily available or identifiable, the request will be submitted to that agency's office of legal counsel with a request that it be processed in accordance with their internal procedures.

(c) Requests to and from the Commission shall be accompanied by a certification that the debtor owes the debt (including the amount) and that the procedures for administrative or salary offset contained in this subpart, or comparable procedures prescribed by the requesting agency, have been fully complied with. The Commission will cooperate with other agencies in effecting collection.

(d) Requests to and from the Commission shall be processed within 30 calendar days of receipt. If such processing is impractical or not feasible, notice to extend the time period for another 30 calendar days will be forwarded 10 calendar days prior to the expiration of the first 30-day period.

[FR Doc. 04–10661 Filed 5–14–04; 8:45 am]

BILLING CODE 6712–01–P

DEPARTMENT OF TRANSPORTATION

Research and Special Programs Administration

49 CFR Part 192

[Docket No. RSPA–02–13208; Amdt. 192–96]

RIN 2137–AD01

Pipeline Safety: Pressure Limiting and Regulating Stations

AGENCY: Research and Special Programs Administration (RSPA), DOT.

ACTION: Direct final rule.

SUMMARY: In the **Federal Register** of September 15, 2003, RSPA published a final rule concerning the operation and capacity of existing pressure limiting and regulating stations on gas pipelines. The rule inadvertently established a pressure limit that could require a reduction in the operating pressure of some pipelines and be impracticable for others to meet. This direct final rule establishes an appropriate pressure limit to avoid these unintended results.

DATES: This direct final rule goes into effect September 14, 2004. If RSPA does not receive any adverse comment [1] or notice of intent to file an adverse comment by July 16, 2004, it will publish a confirmation document within 15 days after the close of the comment period. The confirmation document will announce that this direct final rule will go into effect on the date stated above or at least 30 days after the document is published, whichever is later. If RSPA receives an adverse comment, it will publish a timely notice to confirm that fact and withdraw this direct final rule. RSPA may then incorporate changes based on the adverse comment into a subsequent direct final rule or may publish a notice of proposed rulemaking.

ADDRESSES: You may submit written comments directly to the dockets by any of the following methods:

- Mail: Dockets Facility, U.S. Department of Transportation, Room PL–401, 400 Seventh Street, SW., 20590–0001. Anyone wanting confirmation of mailed comments must include a self-addressed stamped postcard.
- Hand delivery or courier: Room PL–401, 400 Seventh Street, SW., Washington, DC. The Dockets Facility is open from 10 a.m. to 5 p.m., Monday through Friday, except Federal holidays.
- Web site: Go to *http://dms.dot.gov,* click on ''Comment/Submissions'' and follow instructions at the site.

All written comments should identify the gas or liquid docket number and notice number stated in the heading of this notice.

Docket access. For copies of this notice or other material in the dockets, you may contact the Dockets Facility by phone (202–366–9329) or visit the facility at the above street address. For Web access to the dockets to read and download filed material, go to *http://dms.dot.gov/search.* Then type in the last four digits of the gas or liquid docket number shown in the heading of this notice, and click on ''Search.''

Privacy Act Information. Anyone can search the electronic form of all comments filed in any of our dockets by the name of the individual submitting the comment (or signing the comment, if submitted for an association, business, labor union, etc.). You may review DOT's complete Privacy Act Statement in the April 11, 2000, issue of the **Federal Register** (65 FR 19477) or go to *http://dms.dot.gov.*

Anyone is able to search the electronic form of all comments received into any of our dockets by the name of the individual submitting the comment (or signing the comment, if submitted on behalf of an association, business, labor union, etc.). You may review DOT's complete Privacy Act Statement in the **Federal Register** published on April 11, 2000 (volume 65, number 70; pages 19477–78), or you may visit *http://dms.dot.gov.*

FOR FURTHER INFORMATION CONTACT: L.M. Furrow by phone at 202–366–4559, by fax at 202–366–4566, by mail at U.S. Department of Transportation, 400 Seventh Street, SW., Washington, DC 20590, or by e-mail at *buck.furrow@rspa.dot.gov.*

SUPPLEMENTARY INFORMATION:

Need To Revise Regulations on Existing Pressure Limiting and Regulating Stations

Last September RSPA amended a regulation (49 CFR 192.739(c)) that applies to existing pressure limiting and regulating stations (68 FR 53901; Sept. 15, 2003). The amendment established an upper limit on the control or relief pressure in pipelines these stations protect against accidental overpressure. These limits are the same as part 192 requires for newly installed pressure limiting and regulating stations. As a consequence, § 192.739(c) now requires (through a cross-reference to § 192.201(a)) that the control or relief pressure on steel pipelines whose maximum allowable operating pressure (MAOP) is 60 psig or more may not exceed the pressure that produces a hoop stress of 75 percent of the specified minimum yield strength (SMYS) of the pipe.

For new steel pipelines, 75 percent of SMYS is an appropriate limit on control or relief pressure because part 192 does not allow these pipelines to operate at

[1] An adverse comment is one which explains why the rule would be inappropriate, including a challenge to the rule's underlying premise or approach, or would be ineffective or unacceptable without a change. Comments that are frivolous or insubstantial will not be considered adverse under this procedure. A comment recommending a rule change in addition to the rule will not be considered an adverse comment, unless the commenter states why the rule would be ineffective without the additional change. (49 CFR 190.339(c))

a hoop stress greater than 72 percent of SMYS. However, § 192.619(c) allows certain existing pipelines in rural areas to operate at pressures experienced before part 192 took effect. On some of these pipelines, current operating pressures produce hoop stresses greater than 72 percent of SMYS. Consequently, Duke Energy, an operator of interstate gas transmission lines, alerted RSPA that amended § 192.739(c) could be construed to require a reduction in the operating pressure of pipelines operating at hoop stresses greater than 72 percent of SMYS. In addition, for other pipelines operating under § 192.619(c), operators may not be able to calculate hoop stress as a percentage of SMYS, either because a factor needed to calculate hoop stress (*e.g.,* wall thickness) is unknown or SMYS is unknown. In such cases, compliance with the 75-percent-of-SMYS limit would be impracticable.

Because these results were not intended, RSPA is revising § 192.739(c). The revision establishes an appropriate control or relief pressure limit for the affected pipelines (*i.e.,* steel pipelines whose MAOP determined under § 192.619(c) is 60 psig or more, with corresponding hoop stress greater than 72 percent of SMYS or unknown as a percentage of SMYS). Under revised § 192.739(c), if the MAOP produces a hoop stress greater than 72 percent of SMYS, the control or relief pressure limit is MAOP plus 4 percent. This pressure limit corresponds to the 75-percent-of-SMYS limit for new steel pipelines under § 192.201(a)(2)(i). MAOP plus 4 percent is also the limit on control or relief pressure that the American Society of Mechanical Engineers prescribes for new steel pipelines that operate at hoop stresses greater than 72 percent of SMYS (Section 845.411(a), ASME B31.8–1999 code, ''Gas Transmission and Distribution Piping Systems''). If the hoop stress is unknown as a percentage of SMYS (either hoop stress or SMYS is unknown), operators will have to determine a safe control or relief pressure limit after considering the operating and maintenance history of the protected pipeline and its MAOP. Operators' decisions on safe pressure limits must be explained in their operating and maintenance procedures, which are subject to review by government inspectors.

RSPA made a similar amendment to § 192.743(a), requiring the capacity of relief devices at existing pressure limiting and regulating stations to be consistent with the pressure limits of § 192.201(a) (68 FR 53901; Sept. 15, 2003). Because of the 75-percent-of-SMYS limit discussed above, Duke Energy alerted RSPA that § 192.743(a) also could be construed to require a reduction in the operating pressure of some pipelines operating at hoop stresses greater than 72 percent of SMYS. In addition, compliance with § 192.743(a) would be impracticable if hoop stress as a percentage of SMYS were unknown. To avoid these unintended results, RSPA is revising § 192.743(a) in the same manner as § 192.739(c).

Regulatory Analyses and Notices

Executive Order 12866 and DOT Policies and Procedures

RSPA does consider this Direct Final Rule to be a significant regulatory action under section 3(f) of Executive Order 12866 (58 FR 51735; Oct. 4, 1993). Therefore, the Office of Management and Budget (OMB) has not received a copy of this rulemaking to review. RSPA also does not consider this rulemaking to be significant under DOT regulatory policies and procedures (44 FR 11034; February 26, 1979).

The regulations being revised by this Direct Final Rule, §§ 192.739(c) and 192.743(a), were published in the **Federal Register** of September 15, 2003. RSPA prepared a Regulatory Evaluation of the costs and benefits of those regulations, and a copy is in the docket. The evaluation concluded there should be no cost for operators to comply with the regulations, and possibly a cost savings. Because this Direct Final Rule merely removes an unintended impact of the regulations, RSPA does not believe that any further evaluation of costs and benefits is needed. If you disagree with this conclusion, please provide information to the public docket as described above.

Regulatory Flexibility Act

Under the Regulatory Flexibility Act (5 U.S.C. 601 *et seq.*), RSPA must consider whether its rulemakings have a significant economic impact on a substantial number of small entities. The regulations being revised by this Direct Final Rule are consistent with customary practices in the pipeline industry. Therefore, based on the facts available about the anticipated impacts of this rulemaking, I certify that this rulemaking will not have a significant impact on a substantial number of small entities. If you have any information that this conclusion about the impact on small entities is not correct, please provide that information to the public docket as described above.

Executive Order 13175

This Direct Final Rule has been analyzed in accordance with the principles and criteria contained in Executive Order 13175, ''Consultation and Coordination with Indian Tribal Governments.'' Because the Direct Final Rule does not significantly or uniquely affect the communities of the Indian tribal governments and would not impose substantial direct compliance costs, the funding and consultation requirements of Executive Order 13175 do not apply.

Paperwork Reduction Act

This Direct Final Rule does not impose any new information collection requirements.

Unfunded Mandates Reform Act of 1995

This Direct Final Rule does not impose unfunded mandates under the Unfunded Mandates Reform Act of 1995. It would not result in costs of $100 million or more to either State, local, or tribal governments, in the aggregate, or to the private sector, and would be the least burdensome alternative that achieves the objective of the rule.

National Environmental Policy Act

For purposes of the National Environmental Policy Act (42 U.S.C. 4321 *et seq.*), RSPA prepared an Environmental Assessment of the regulations being revised by this Direct Final Rule, and a copy is in the docket. The assessment determined that because the regulations are consistent with customary practices, they do not significantly affect the quality of the human environment. Because this Direct Final Rule merely removes an unintended impact of the regulations, RSPA does not believe that any further assessment of environmental impact is needed. If you disagree with this conclusion, please submit your comments to the docket as described above.

Executive Order 13132

This Direct Final Rule has been analyzed in accordance with the principles and criteria contained in Executive Order 13132 (''Federalism''). The Direct Final Rule does not have any provision that (1) has substantial direct effects on the States, the relationship between the national government and the States, or the distribution of power and responsibilities among the various levels of government; (2) imposes substantial direct compliance costs on State and local governments; or (3) preempts state law. Therefore, the

consultation and funding requirements of Executive Order 13132 do not apply.

Executive Order 13211

This rulemaking is not a significant energy action under Executive Order 13211. It is not a significant regulatory action under Executive Order 12866 and is not likely to have a significant adverse effect on the supply, distribution, or use of energy. Further, this rulemaking has not been designated by the Administrator of the Office of Information and Regulatory Affairs as a significant energy action.

List of Subjects in 49 CFR Part 192

Natural gas, Pipeline safety, Reporting and recordkeeping requirements.

■ Accordingly, 49 CFR part 192 is amended as follows:

PART 192—TRANSPORTATION OF NATURAL AND OTHER GAS BY PIPELINE: MINIMUM FEDERAL SAFETY STANDARDS

■ 1. The authority citation for part 192 continues to read as follows:

Authority: 49 U.S.C. 5103, 60102, 60104, 60108, 60109, 60110, 60113, and 60118; and 49 CFR 1.53.

■ 2. Amend § 192.739 as follows:

■ a. Redesignate the undesignated introductory text and paragraphs (a) through (d) as paragraph (a) introductory text, and paragraphs (a)(1) through (a)(4), respectively;

■ b. Revise newly designated paragraph (a)(3) and add paragraph (b) to read as follows:

§ 192.739 Pressure limiting and regulating stations: Inspection and testing.

(a) * * *

(3) Except as provided in paragraph (b) of this section, set to control or relieve at the correct pressure consistent with the pressure limits of § 192.201(a); and

* * * * *

(b) For steel pipelines whose MAOP is determined under § 192.619(c), if the MAOP is 60 psi (414 kPa) gage or more, the control or relief pressure limit is as follows:

If the MAOP produces a hoop stress that is:	Then the pressure limit is:
Greater than 72 percent of SMYS	MAOP plus 4 percent.
Unknown as a percentage of SMYS	A pressure that will prevent unsafe operation of the pipeline considering its operating and maintenance history and MAOP.

■ 3. Revise § 192.743(a) to read as follows:

§ 192.743 Pressure limiting and regulating stations: Capacity of relief devices.

(a) Pressure relief devices at pressure limiting stations and pressure regulating stations must have sufficient capacity to protect the facilities to which they are connected. Except as provided in § 192.739(b), the capacity must be consistent with the pressure limits of § 192.201(a). This capacity must be determined at intervals not exceeding 15 months, but at least once each calendar year, by testing the devices in place or by review and calculations.

* * * * *

Issued in Washington, DC, on May 5, 2004.

Samuel G. Bonasso,

Deputy Administrator.

[FR Doc. 04–11005 Filed 5–14–04; 8:45 am]

BILLING CODE 4910–60–P

Proposed Rules

Federal Register
Vol. 69, No. 95
Monday, May 17, 2004

This section of the FEDERAL REGISTER contains notices to the public of the proposed issuance of rules and regulations. The purpose of these notices is to give interested persons an opportunity to participate in the rule making prior to the adoption of the final rules.

DEPARTMENT OF AGRICULTURE

Federal Crop Insurance Corporation

7 CFR Part 457

RIN 0563–AB93

Common Crop Insurance Regulations; Peanut Crop Insurance Provisions

AGENCY: Federal Crop Insurance Corporation, USDA.

ACTION: Proposed rule with request for comments.

SUMMARY: The Federal Crop Insurance Corporation (FCIC) proposes to amend the Peanut Crop Insurance Provisions. The intended effect of this action is to provide policy changes and clarify existing policy provisions to better meet the needs of the insureds and to restrict the effect of the current Peanut Crop Insurance Regulations to the 2004 and prior crop years.

DATES: Written comments and opinions on this proposed rule will be accepted until close of business June 16, 2004, and will be considered when the rule is to be made final.

ADDRESSES: Interested persons are invited to submit written comments to the Director, Product Development Division, Risk Management Agency, United States Department of Agriculture, 6501 Beacon Drive, Stop 0812, Room 421, Kansas City, MO 64133–4676. Comments titled ''Peanut Crop Provisions'' may be sent via the Internet directly to *DirectorPDD@rma.usda.gov,* or the Federal eRulemaking Portal: *http://www.regulations.gov.* Follow the online instructions for submitting comments. A copy of each response will be available for public inspection and copying from 7 a.m. to 4:30 p.m., CDT, Monday through Friday except holidays, at the above address.

FOR FURTHER INFORMATION CONTACT: Gary Johnson, Risk Management Specialist, Research and Development, Product Development Division, Risk Management Agency, at the Kansas City, MO, address listed above, telephone (816) 926–7730.

SUPPLEMENTARY INFORMATION:

Executive Order 12866

The Office of Management and Budget (OMB) has determined that this rule is not significant for the purpose of Executive Order 12866 and, therefore, it has not been reviewed by OMB.

Paperwork Reduction Act of 1995

Pursuant to the Paperwork Reduction Act of 1995 (44 U.S.C. chapter 35), the collections of information in this rule have been approved by the Office of Management and Budget (OMB) under control number 0563–0053 through February 28, 2005.

Regulatory Flexibility Act

FCIC certifies that this regulation will not have a significant economic impact on a substantial number of small entities. Program requirements for the Federal crop insurance program are the same for all producers regardless of the size of their farming operation. For instance, all producers are required to submit an application and acreage report to establish their insurance guarantees, and compute premium amounts, or a notice of loss and production information to determine an indemnity payment in the event of an insured cause of crop loss. Whether a producer has 10 acres or 1000 acres, there is no difference in the kind of information collected. The amount of information collected may be determined by farm size but it is the larger farms that would have to report more information because they are likely to have more acreage. To ensure crop insurance is available to small entities, the Federal Crop Insurance Act authorizes FCIC to waive collection of administrative fees from limited resource farmers. FCIC believes this waiver helps to ensure small entities are given the same opportunities to manage their risks through the use of crop insurance. A Regulatory Flexibility Analysis has not been prepared since this regulation does not have an impact on small entities, and, therefore, this regulation is exempt from the provisions of the Regulatory Flexibility Act (5 U.S.C. 605).

Federal Assistance Program

This program is listed in the Catalog of Federal Domestic Assistance under No. 10.450.

Executive Order 12372

This program is not subject to the provisions of Executive Order 12372, which require intergovernmental consultation with State and local officials. See the Notice related to 7 CFR part 3015, subpart V, published at 48 FR 29115, June 24, 1983.

Executive Order 12988

This rule has been reviewed in accordance with Executive Order 12988 on civil justice reform. The provisions of this rule will not have a retroactive effect. The provisions of this rule will preempt State and local laws to the extent such State and local laws are inconsistent herewith. With respect to any action taken by FCIC under the terms of the crop insurance policy, the administrative appeal provisions published at 7 CFR part 11 or 7 CFR 400.169, as applicable, must be exhausted before any action for judicial review of any determination or action by FCIC may be brought.

Environmental Evaluation

This action is not expected to have a significant impact on the quality of the human environment, health, and safety. Therefore, neither an Environmental Assessment nor an Environmental Impact Statement is needed.

Background

FCIC proposes to amend the Common Crop Insurance Regulations (7 CFR part 457) by amending § 457.134 Peanut Crop Insurance Provisions effective for the 2005 and succeeding crop years. This rule will remove and reserve section 2 of the Peanut Crop Insurance Provisions, which will allow optional units for peanuts to be established in accordance with section 34 of the Common Crop Insurance Policy Basic Provisions (Basic Provisions). Under the current Peanut Crop Insurance Provisions, optional units for peanuts are only allowed by Farm Serial Number (FSN). Prior to the Farm Security and Rural Investment Act of 2002 (2002 Farm Bill), peanut producers were required to report their peanut acreage and production to their county Farm Service Agency (FSA) office. The FSA

office used the information to establish peanut quotas and peanut farm yields by FSN. This information served as the basis for determining a peanut producer's production guarantee for crop insurance purposes. The 2002 Farm Bill repealed peanut quotas, which caused the peanut crop insurance program to default to the provisions specifying that the production guarantee would be based on the actual production history (APH) of the producer. Due to loss of peanut quotas, peanut producers have requested that optional units be allowed consistent with optional units requirements contained in section 34 of the Basic Provisions. The proposed change will allow peanut producers to have optional units, with an appropriate rate surcharge, based on sections, or section equivalents.

The elimination of the peanut quota has resulted in making the quota price elections no longer applicable. Producers have expressed a desire for a price election for peanuts based on a ''contract price''. Producers have requested that FCIC consider allowing producers to insure their peanuts on the basis of a ''contract price''. Therefore, FCIC is requesting public comment as to the feasibility and possible approaches for insuring peanuts at a ''contract price'' when grown under a processor contact. Recommended approaches should address issues such as the terms of the processor contract (acreage based, production based), available contract price information, applicable quality standards, the contracting entity, access to information that is free from producer or other related bias, and other parameters that would be necessary to develop a contract price option that meets producer needs and is not subject to waste, fraud, and abuse.

List of Subjects in 7 CFR Part 457

Crop insurance, Peanuts, Reporting and recordkeeping requirements.

Proposed Rule

Accordingly, as set forth in the preamble, the Federal Crop Insurance Corporation proposes to amend 7 CFR part 457, Common Crop Insurance Regulations, for the 2005 and succeeding crop years as follows:

PART 457—COMMON CROP INSURANCE REGULATIONS

1. The authority citation for 7 CFR part 457 continues to read as follows:

Authority: 7 U.S.C. 1506(l), 1506(p).

2. Amend § 457.134 by revising the introductory text and removing and reserving section 2., Unit Division.

§ 457.134 Peanut crop insurance provisions.

The peanut crop insurance provision for the 2005 and succeeding crop years are as follows:

* * * * *

Signed in Washington, DC, on May 10, 2004.

Ross J. Davidson, Jr.,

Manager, Federal Crop Insurance Corporation.

[FR Doc. 04–11035 Filed 5–14–04; 8:45 am]

BILLING CODE 3410–08–P

SMALL BUSINESS ADMINISTRATION

13 CFR Part 121

RIN 3245–AF11

Small Business Size Standards; Restructuring of Size Standards

AGENCY: U.S. Small Business Administration (SBA).

ACTION: Proposed rule; notice of extension of comment period.

SUMMARY: On March 19, 2004, the SBA proposed to restructure its small business size standards by establishing size standards in terms of the number of employees of a business concern for most industries and SBA programs. The rule proposes to establish 10 employee-based size standards ranging from 50 employees and 1,500 employees, depending on the industry or SBA program. The proposed rule also proposed other changes to simplify the size standards and provided a 60-day comment period closing on May 18, 2004.

SBA is extending the comment period an additional 45 days to July 2, 2004. The proposal to restructure size standards has generated a significant level of interest among small businesses. Given the scope of the proposal and the nature of the issues raised by the comments received to date, SBA believes that affected businesses need more time to review the proposal and prepare their comments.

DATES: The comment period for the proposed rule published on March 19, 2004 (69 FR 13130) is extended through July 2, 2004.

ADDRESSES: You may submit comments, identified by RIN number 3245–AF11, by any of the following methods: Through the Federal eRulemaking portal at *http://www.regulations.gov;* by mail to Gary M. Jackson, Assistant Administrator for Size Standards, U.S. Small Business Administration, 409 Third St., SW., Mail Code 6530, Washington, DC 20416; by email (include RIN number in the subject line) to *restructure.sizestandards@sba.gov;* or via facsimile at (202) 205–6390.

FOR FURTHER INFORMATION CONTACT: Contact the SBA's Office of Size Standards at (202) 205–6618 or *sizestandards@sba.gov.*

Dated: May 12, 2004.

Allegra F. McCullough,

Associate Deputy Administrator for Government Contracting and Business Development.

[FR Doc. 04–11160 Filed 5–14–04; 8:45 am]

BILLING CODE 8025–01–P

DEPARTMENT OF TRANSPORTATION

Federal Aviation Administration

14 CFR Part 39

[Docket No. 2000–NM–124–AD]

RIN 2120–AA64

Airworthiness Directives; Airbus Model A310 and Model A300 B4–600, B4–600R, C4–605R Variant F, and F4–600R (Collectively Called A300–600) Series Airplanes

AGENCY: Federal Aviation Administration, DOT.

ACTION: Proposed rule; withdrawal.

SUMMARY: This action withdraws a notice of proposed rulemaking (NPRM) that proposed a new airworthiness directive (AD), applicable to all Airbus Model A310 and A300–600 series airplanes. That action would have required revising the airplane flight manual (AFM) to provide the flightcrew with procedures to maintain airplane controllability in the event of an in-flight thrust reverser deployment. Since the issuance of the NPRM, the Federal Aviation Administration (FAA) has issued another AD to require revising the AFM to contain the text of the AFM revisions that the NPRM would have required to be inserted into the AFM. Accordingly, the proposed rule is withdrawn.

FOR FURTHER INFORMATION CONTACT: Dan Rodina, Aerospace Engineer, International Branch, ANM–116, FAA, Transport Airplane Directorate, 1601 Lind Avenue, SW., Renton, Washington 98055–4056; telephone (425) 227–2125; fax (425) 227–1149.

SUPPLEMENTARY INFORMATION: A proposal to amend part 39 of the Federal Aviation Regulations (14 CFR part 39) to add a new airworthiness directive (AD); applicable to all Airbus Model A310 and A300 B4–600, B4–600R, C4–605R Variant F, and F4–600R (collectively

called A300–600) series airplanes; was published in the **Federal Register** as a Notice of Proposed Rulemaking (NPRM) on November 28, 2000 (65 FR 70821). The proposed rule would have required revising the Airplane Flight Manual (AFM) to provide the flightcrew with procedures to maintain airplane controllability in the event of an in-flight thrust reverser deployment. That action was prompted by a determination that existing procedures specified in the AFM for addressing the in-flight deployment of a thrust reverser could result in reduced controllability of the airplane. The proposed actions were intended to provide the flightcrew with procedures to maintain airplane controllability in the event of an in-flight deployment of the thrust reverser.

Actions That Occurred Since the NPRM Was Issued

Since the issuance of that NPRM, the FAA has issued AD 2004–03–10, amendment 39–13454 (69 FR 5926, February 9, 2004). That AD applies to all Airbus Model A310 and A300–600 series airplanes, and requires revising the AFM to provide the flightcrew with procedures to maintain controllability of the airplane in the event of an in-flight deployment of the thrust reverser. That AD contains the text of the AFM revisions that the NPRM would have required to be inserted into the AFM.

FAA's Conclusions

Upon further consideration, the FAA has determined that it is inappropriate to have two ADs requiring the same action. Accordingly, the proposed rule is hereby withdrawn.

Withdrawal of this NPRM constitutes only such action, and does not preclude the agency from issuing another action in the future, nor does it commit the agency to any course of action in the future.

Regulatory Impact

Since this action only withdraws a notice of proposed rulemaking, it is neither a proposed nor a final rule and therefore is not covered under Executive Order 12866, the Regulatory Flexibility Act, or DOT Regulatory Policies and Procedures (44 FR 11034, February 26, 1979).

List of Subjects in 14 CFR Part 39

Air transportation, Aircraft, Aviation safety, Safety.

The Withdrawal

Accordingly, the notice of proposed rulemaking, Docket 2000–NM–124–AD, published in the **Federal Register** on November 28, 2000 (65 FR 70821), is withdrawn.

Issued in Renton, Washington, on May 5, 2004.

Ali Bahrami,

Acting Manager, Transport Airplane Directorate, Aircraft Certification Service.

[FR Doc. 04–11042 Filed 5–14–04; 8:45 am]

BILLING CODE 4910–13–P

DEPARTMENT OF TRANSPORTATION

Federal Aviation Administration

14 CFR Part 39

[Docket No. 2003–NM–252–AD]

RIN 2120–AA64

Airworthiness Directives; Boeing Model 757 Series Airplanes

AGENCY: Federal Aviation Administration, DOT.

ACTION: Notice of proposed rulemaking (NPRM).

SUMMARY: This document proposes the adoption of a new airworthiness directive (AD) that is applicable to certain Boeing Model 757 series airplanes. This proposal would require repetitive detailed inspections of the support brackets and associated fasteners for the hydraulic lines located in the nacelle struts, and related investigative and corrective actions as necessary. This proposal also provides an optional terminating action for the repetitive inspections. This action is necessary to prevent flammable fluids from leaking into the interior compartment of the nacelle struts where ignition sources exist, which could result in the ignition of flammable fluids and an uncontained fire. This action is intended to address the identified unsafe condition.

DATES: Comments must be received by July 1, 2004.

ADDRESSES: Submit comments in triplicate to the Federal Aviation Administration (FAA), Transport Airplane Directorate, ANM–114, Attention: Rules Docket No. 2003–NM–252–AD, 1601 Lind Avenue, SW., Renton, Washington 98055–4056. Comments may be inspected at this location between 9 a.m. and 3 p.m., Monday through Friday, except Federal holidays. Comments may be submitted via fax to (425) 227–1232. Comments may also be sent via the Internet using the following address: *9-anm-nprmcomment@faa.gov.* Comments sent via fax or the Internet must contain ''Docket No. 2003–NM–252–AD'' in the subject line and need not be submitted in triplicate. Comments sent via the Internet as attached electronic files must be formatted in Microsoft Word 97 or 2000 or ASCII text.

The service information referenced in the proposed rule may be obtained from Boeing Commercial Airplanes, P.O. Box 3707, Seattle, Washington 98124–2207. This information may be examined at the FAA, Transport Airplane Directorate, 1601 Lind Avenue, SW., Renton, Washington.

FOR FURTHER INFORMATION CONTACT: Tom Thorson, Aerospace Engineer, Propulsion Branch, ANM–140S, FAA, Seattle Aircraft Certification Office, 1601 Lind Avenue, SW., Renton, Washington 98055–4056; telephone (425) 917–6508; fax (425) 917–6590.

SUPPLEMENTARY INFORMATION:

Comments Invited

Interested persons are invited to participate in the making of the proposed rule by submitting such written data, views, or arguments as they may desire. Communications shall identify the Rules Docket number and be submitted in triplicate to the address specified above. All communications received on or before the closing date for comments, specified above, will be considered before taking action on the proposed rule. The proposals contained in this action may be changed in light of the comments received.

Submit comments using the following format:

- Organize comments issue-by-issue. For example, discuss a request to change the compliance time and a request to change the service bulletin reference as two separate issues.
- For each issue, state what specific change to the proposed AD is being requested.
- Include justification (*e.g.*, reasons or data) for each request.

Comments are specifically invited on the overall regulatory, economic, environmental, and energy aspects of the proposed rule. All comments submitted will be available, both before and after the closing date for comments, in the Rules Docket for examination by interested persons. A report summarizing each FAA-public contact concerned with the substance of this proposal will be filed in the Rules Docket.

Commenters wishing the FAA to acknowledge receipt of their comments submitted in response to this action must submit a self-addressed, stamped postcard on which the following statement is made: ''Comments to Docket Number 2003–NM–252–AD.'' The postcard will be date stamped and returned to the commenter.

Availability of NPRMs

Any person may obtain a copy of this NPRM by submitting a request to the FAA, Transport Airplane Directorate, ANM–114, Attention: Rules Docket No. 2003–NM–252–AD, 1601 Lind Avenue, SW., Renton, Washington 98055–4056.

Discussion

The FAA has received reports of failure of the support brackets and associated fasteners for the hydraulic lines located in the nacelle struts. These failures occurred on certain Model 757 series airplanes equipped with Rolls-Royce engines. The hydraulic lines provide supply pressure from the hydraulic pumps to the airframe and are subject to high frequency pressure oscillations/vibrations. Investigation by the manufacturer revealed that the operating pressure and surge loads from the hydraulic pumps are higher than originally expected and exceed the capability of the design for the support bracket structure.

The hydraulic lines are located in the upper fairing compartment of the nacelle struts. The upper fairing compartment is a flammable leakage zone and is isolated from other strut compartments by a protective vapor barrier. The vapor barrier acts as a seal to keep flammable fluids and vapors from hydraulic and fuel line leaks out of the interior portion of the strut where pneumatic bleed air ducts are located. The surface temperature of the bleed air ducts is hot enough to be an ignition source. The reported condition of sheared or loose fasteners, or damage to the strut webs adjacent to the support brackets and associated fasteners, compromises the vapor barrier, which allows flammable fluids to leak into the interior compartments of the nacelle struts. Such a condition, if not corrected, could result in ignition of flammable fluids and an uncontained fire.

Explanation of Relevant Service Information

The FAA has reviewed and approved Boeing Alert Service Bulletins 757–54A0045 (for Model 757–200 series airplanes), dated May 22, 2003; and 757–54A0046 (for Model 757–300 series airplanes), dated May 29, 2003. These service bulletins describe procedures for inspecting the support brackets and associated fasteners for the hydraulic lines located in the nacelle struts for loose and/or damaged parts, and related investigative and corrective actions. Evidence of damage includes sheared fasteners and/or elongated fastener holes in the strut webs. If no damaged or loose parts are found, the service bulletins state that operators may either repeat the inspection of the hydraulic line support brackets and associated fasteners at the intervals specified in the service bulletin, or do the related investigative and corrective actions.

The procedures for the related investigative and corrective actions include:

- Inspecting the fuel and hydraulic lines and strut webs for evidence of damage (*e.g.*, chafing or holes) caused by a loose support bracket and/or line.
- Replacing or repairing damaged fuel lines.
- Replacing damaged hydraulic lines.
- Repairing damaged areas of the strut webs.
- Contacting Boeing for damage that is beyond the repair limitations specified in the structural repair manual.
- Modifying the support brackets by installing additional straps and stronger fasteners.

Accomplishment of the actions specified in the service bulletins is intended to adequately address the identified unsafe condition.

Explanation of Requirements of Proposed AD

Since an unsafe condition has been identified that is likely to exist or develop on other products of this same type design, the proposed AD would require accomplishment of the actions specified in the service bulletins described previously, except as discussed below. This proposed AD also would provide for optional terminating action for the repetitive inspections.

Difference Between the Service Bulletins and Proposed AD

Although the service bulletins specify that operators may contact the manufacturer for disposition of certain repair conditions, this proposed AD would require operators to repair those conditions per a method approved by the FAA.

Cost Impact

There are approximately 603 airplanes of the affected design in the worldwide fleet. The FAA estimates that 325 airplanes of U.S. registry would be affected by this proposed AD, that it would take approximately 22 work hours per airplane to accomplish the proposed inspections, and that the average labor rate is $65 per work hour. Based on these figures, the cost impact of the proposed AD on U.S. operators is estimated to be $464,750, or $1,430 per airplane.

The cost impact figure discussed above is based on assumptions that no operator has yet accomplished any of the proposed requirements of this AD action, and that no operator would accomplish those actions in the future if this proposed AD were not adopted. The cost impact figures discussed in AD rulemaking actions represent only the time necessary to perform the specific actions actually required by the AD. These figures typically do not include incidental costs, such as the time required to gain access and close up, planning time, or time necessitated by other administrative actions.

Regulatory Impact

The regulations proposed herein would not have a substantial direct effect on the States, on the relationship between the national Government and the States, or on the distribution of power and responsibilities among the various levels of government. Therefore, it is determined that this proposal would not have federalism implications under Executive Order 13132.

For the reasons discussed above, I certify that this proposed regulation (1) is not a ''significant regulatory action'' under Executive Order 12866; (2) is not a ''significant rule'' under the DOT Regulatory Policies and Procedures (44 FR 11034, February 26, 1979); and (3) if promulgated, will not have a significant economic impact, positive or negative, on a substantial number of small entities under the criteria of the Regulatory Flexibility Act. A copy of the draft regulatory evaluation prepared for this action is contained in the Rules Docket. A copy of it may be obtained by contacting the Rules Docket at the location provided under the caption **ADDRESSES**.

List of Subjects in 14 CFR Part 39

Air transportation, Aircraft, Aviation safety, Safety.

The Proposed Amendment

Accordingly, pursuant to the authority delegated to me by the Administrator, the Federal Aviation Administration proposes to amend part 39 of the Federal Aviation Regulations (14 CFR part 39) as follows:

PART 39—AIRWORTHINESS DIRECTIVES

1. The authority citation for part 39 continues to read as follows:

Authority: 49 U.S.C. 106(g), 40113, 44701.

§ 39.13 [Amended]

2. Section 39.13 is amended by adding the following new airworthiness directive:

Boeing: Docket 2003–NM–252–AD.

Applicability: Model 757 series airplanes, line numbers 1 through 1018 inclusive, equipped with Rolls Royce engines; certificated in any category.

Compliance: Required as indicated, unless accomplished previously.

To prevent flammable fluids from leaking into the interior compartment of the nacelle struts where ignition sources exist, which could result in the ignition of flammable fluids and an uncontained fire, accomplish the following:

Inspection

(a) Within 3,000 flight hours after the effective date of this AD: Do a detailed inspection of the support brackets and associated fasteners for the hydraulic lines located in the nacelle struts for loose and/or damaged parts, by accomplishing all of the actions specified in Part 1 of the Accomplishment Instructions of Boeing Alert Service Bulletin 757–54A0045 (for Model 757–200 series airplanes), dated May 22, 2003; or Boeing Alert Service Bulletin 757–54A0046 (for Model 757–300 series airplanes), dated May 29, 2003; as applicable. Do the actions per the applicable service bulletin. Repeat the inspection thereafter at intervals not to exceed 3,000 flight hours.

Note 1: For the purposes of this AD, a detailed inspection is defined as: ''An intensive visual examination of a specific structural area, system, installation, or assembly to detect damage, failure, or irregularity. Available lighting is normally supplemented with a direct source of good lighting at intensity deemed appropriate by the inspector. Inspection aids such as mirror, magnifying lenses, etc., may be used. Surface cleaning and elaborate access procedures may be required.''

Related Investigative and Corrective Actions

(b) Except as required by paragraph (d) of this AD: If any loose or damaged parts are found during any inspection required by paragraph (a) of this AD, before further flight, do all of the related and investigative corrective actions specified in Part 2 of the Accomplishment Instructions of Boeing Alert Service Bulletin 757–54A0045 (for Model 757–200 series airplanes), dated May 22, 2003; or Boeing Alert Service Bulletin 757–54A0046 (for Model 757–300 series airplanes), dated May 29, 2003; as applicable. Do the actions per the applicable service bulletin. Accomplishment of these actions constitutes terminating action for the repetitive inspections required by paragraph (a) of this AD.

Optional Terminating Action

(c) Accomplishment of all of the actions specified in Part 2 of the Accomplishment Instructions of Boeing Alert Service Bulletin 757–54A0045 (for Model 757–200 series airplanes), dated May 22, 2003; or Boeing Alert Service Bulletin 757–54A0046 (for Model 757–300 series airplanes), dated May 29, 2003; as applicable; constitutes terminating action for the repetitive inspections required by paragraph (a) of this AD.

Repair Information

(d) If any damage is found during any inspection required by this AD, and the service bulletin specifies contacting Boeing for appropriate action: Before further flight, repair per a method approved by the Manager, Seattle Aircraft Certification Office (ACO), FAA. For a repair method to be approved by the Manager, Seattle ACO, as required by this paragraph, the Manager's approval letter must specifically refer to this AD.

Alternative Methods of Compliance

(e) In accordance with 14 CFR 39.19, the Manager, Seattle ACO, is authorized to approve alternative methods of compliance (AMOCs) for this AD.

Issued in Renton, Washington, on May 5, 2004.

Ali Bahrami,

Acting Manager, Transport Airplane Directorate, Aircraft Certification Service.

[FR Doc. 04–11041 Filed 5–14–04; 8:45 am]

BILLING CODE 4910–13–P

DEPARTMENT OF TRANSPORTATION

Federal Aviation Administration

14 CFR Part 39

[Docket No. 2002–NM–344–AD]

RIN 2120–AA64

Airworthiness Directives; Airbus Model A310 Series Airplanes

AGENCY: Federal Aviation Administration, DOT.

ACTION: Notice of proposed rulemaking (NPRM).

SUMMARY: This document proposes the adoption of a new airworthiness directive (AD) that is applicable to certain Airbus Model A310 series airplanes. This proposal would require modification of certain wires in the right-hand wing. This action is necessary to ensure that fuel quantity indication wires are properly separated from wires carrying 115-volt alternating current (AC). Improper separation of such wires, in the event of wire damage, could lead to a short circuit and a possible ignition source, which could result in a fire in the airplane. This action is intended to address the identified unsafe condition.

DATES: Comments must be received by June 16, 2004.

ADDRESSES: Submit comments in triplicate to the Federal Aviation Administration (FAA), Transport Airplane Directorate, ANM–114, Attention: Rules Docket No. 2002–NM–344–AD, 1601 Lind Avenue, SW., Renton, Washington 98055–4056. Comments may be inspected at this location between 9 a.m. and 3 p.m., Monday through Friday, except Federal holidays. Comments may be submitted via fax to (425) 227–1232. Comments may also be sent via the Internet using the following address: *9-anm-nprmcomment@faa.gov.* Comments sent via fax or the Internet must contain ''Docket No. 2002–NM–344–AD'' in the subject line and need not be submitted in triplicate. Comments sent via the Internet as attached electronic files must be formatted in Microsoft Word 97 or 2000 or ASCII text.

The service information referenced in the proposed rule may be obtained from Airbus, 1 Rond Point Maurice Bellonte, 31707 Blagnac Cedex, France. This information may be examined at the FAA, Transport Airplane Directorate, 1601 Lind Avenue, SW., Renton, Washington.

FOR FURTHER INFORMATION CONTACT: Tim Backman, Aerospace Engineer, International Branch, ANM–116, FAA, Transport Airplane Directorate, 1601 Lind Avenue, SW., Renton, Washington 98055–4056; telephone (425) 227–2797; fax (425) 227–1149.

SUPPLEMENTARY INFORMATION:

Comments Invited

Interested persons are invited to participate in the making of the proposed rule by submitting such written data, views, or arguments as they may desire. Communications shall identify the Rules Docket number and be submitted in triplicate to the address specified above. All communications received on or before the closing date for comments, specified above, will be considered before taking action on the proposed rule. The proposals contained in this action may be changed in light of the comments received.

Submit comments using the following format:

- Organize comments issue-by-issue. For example, discuss a request to change the compliance time and a request to change the service bulletin reference as two separate issues.
- For each issue, state what specific change to the proposed AD is being requested.
- Include justification (*e.g.*, reasons or data) for each request.

Comments are specifically invited on the overall regulatory, economic, environmental, and energy aspects of the proposed rule. All comments submitted will be available, both before and after the closing date for comments, in the Rules Docket for examination by interested persons. A report summarizing each FAA-public contact

concerned with the substance of this proposal will be filed in the Rules Docket.

Commenters wishing the FAA to acknowledge receipt of their comments submitted in response to this action must submit a self-addressed, stamped postcard on which the following statement is made: ''Comments to Docket Number 2002–NM–344–AD.'' The postcard will be date stamped and returned to the commenter.

Availability of NPRMs

Any person may obtain a copy of this NPRM by submitting a request to the FAA, Transport Airplane Directorate, ANM–114, Attention: Rules Docket No. 2002–NM–344–AD, 1601 Lind Avenue, SW., Renton, Washington 98055–4056.

Discussion

The FAA has examined the underlying safety issues involved in recent fuel tank explosions on several large transport airplanes, including the adequacy of existing regulations, the service history of airplanes subject to those regulations, and existing maintenance practices for fuel tank systems. As a result of those findings, we issued a regulation titled ''Transport Airplane Fuel Tank System Design Review, Flammability Reduction and Maintenance and Inspection Requirements' (67 FR 23086, May 7, 2001). In addition to new airworthiness standards for transport airplanes and new maintenance requirements, this rule included Special Federal Aviation Regulation No. 88 (''SFAR 88,'' Amendment 21–78, and subsequent Amendments 21–82 and 21–83).

Among other actions, SFAR 88 requires certain type design (*i.e.*, type certificate (TC) and supplemental type certificate (STC)) holders to substantiate that their fuel tank systems can prevent ignition sources in the fuel tanks. This requirement applies to type design holders for large turbine-powered transport airplanes and for subsequent modifications to those airplanes. It requires them to perform design reviews and to develop design changes and maintenance procedures if their designs do not meet the new fuel tank safety standards. As explained in the preamble to the rule, we intended to adopt airworthiness directives to mandate any changes found necessary to address unsafe conditions identified as a result of these reviews.

In evaluating these design reviews, we have established four criteria intended to define the unsafe conditions associated with fuel tank systems that require corrective actions. The percentage of operating time during which fuel tanks are exposed to flammable conditions is one of these criteria. The other three criteria address the failure types under evaluation: Single failures, single failures in combination with another latent condition(s), and in-service failure experience. For all four criteria, the evaluations included consideration of previous actions taken that may mitigate the need for further action.

Based on this process, we have determined that the actions identified in this proposed AD are necessary to reduce the potential of ignition sources inside fuel tanks, which, in combination with flammable fuel vapors, could result in fuel tank explosions and consequent loss of the airplane.

As a result of the design reviews of the fuel tank system, the Direction Générale de l'Aviation Civile (DGAC), which is the airworthiness authority for France, notified the FAA that an unsafe condition may exist on certain Airbus Model A310 series airplanes. The DGAC advises that analysis of wire routing has revealed that Route 2S of the fuel electrical circuit, located in the right-hand wing, does not provide adequate separation of fuel quantity indication wires from wires carrying 115-volt alternating current (AC). Improper separation of such wires, in the event of wire damage, could lead to a short circuit and a possible ignition source, which could result in a fire in the airplane.

Explanation of Relevant Service Information

Airbus has issued Service Bulletin A310–28–2148, Revision 01, dated October 29, 2002. That service bulletin describes procedures for modifying the routing of wires in the right-hand wing by installing cable sleeves. Accomplishment of the actions specified in the service bulletin is intended to adequately address the identified unsafe condition. The DGAC classified this service bulletin as mandatory and issued French airworthiness directive 2002–578(B), dated November 27, 2002, to ensure the continued airworthiness of these airplanes in France.

FAA's Conclusions

This airplane model is manufactured in France and is type certificated for operation in the United States under the provisions of section 21.29 of the Federal Aviation Regulations (14 CFR 21.29) and the applicable bilateral airworthiness agreement. Pursuant to this bilateral airworthiness agreement, the DGAC has kept the FAA informed of the situation described above. The FAA has examined the findings of the DGAC, reviewed all available information, and determined that AD action is necessary for products of this type design that are certificated for operation in the United States.

Explanation of Requirements of Proposed Rule

Since an unsafe condition has been identified that is likely to exist or develop on other airplanes of the same type design registered in the United States, the proposed AD would require accomplishment of the actions specified in the service bulletin described previously.

Cost Impact

The FAA estimates that 46 airplanes of U.S. registry would be affected by this proposed AD, that it would take approximately 9 work hours per airplane to accomplish the proposed actions, and that the average labor rate is $65 per work hour. Required parts would cost approximately $1,880 per airplane. Based on these figures, the cost impact of the proposed AD on U.S. operators is estimated to be $113,390, or $2,465 per airplane.

The cost impact figure discussed above is based on assumptions that no operator has yet accomplished any of the proposed requirements of this AD action, and that no operator would accomplish those actions in the future if this AD were not adopted. The cost impact figures discussed in AD rulemaking actions represent only the time necessary to perform the specific actions actually required by the AD. These figures typically do not include incidental costs, such as the time required to gain access and close up, planning time, or time necessitated by other administrative actions.

Regulatory Impact

The regulations proposed herein would not have a substantial direct effect on the States, on the relationship between the national Government and the States, or on the distribution of power and responsibilities among the various levels of government. Therefore, it is determined that this proposal would not have federalism implications under Executive Order 13132.

For the reasons discussed above, I certify that this proposed regulation (1) is not a ''significant regulatory action'' under Executive Order 12866; (2) is not a ''significant rule'' under the DOT Regulatory Policies and Procedures (44 FR 11034, February 26, 1979); and (3) if promulgated, will not have a significant economic impact, positive or negative, on a substantial number of small entities

under the criteria of the Regulatory Flexibility Act. A copy of the draft regulatory evaluation prepared for this action is contained in the Rules Docket. A copy of it may be obtained by contacting the Rules Docket at the location provided under the caption **ADDRESSES**.

List of Subjects in 14 CFR Part 39

Air transportation, Aircraft, Aviation safety, Safety.

The Proposed Amendment

Accordingly, pursuant to the authority delegated to me by the Administrator, the Federal Aviation Administration proposes to amend part 39 of the Federal Aviation Regulations (14 CFR part 39) as follows:

PART 39—AIRWORTHINESS DIRECTIVES

1. The authority citation for part 39 continues to read as follows:

Authority: 49 U.S.C. 106(g), 40113, 44701.

§ 39.13 [Amended]

2. Section 39.13 is amended by adding the following new airworthiness directive:

Airbus: Docket 2002–NM–344–AD.

Applicability: Model A310 series airplanes on which neither Airbus Modification 12427 nor 12435 has been accomplished, certificated in any category.

Compliance: Required as indicated, unless accomplished previously.

To ensure that fuel quantity indication wires are properly separated from wires carrying 115-volt alternating current (AC), accomplish the following:

Modification

(a) Within 4,000 flight hours after the effective date of this AD: Modify the routing of wires in the right-hand wing by installing cable sleeves, per the Accomplishment Instructions of Airbus Service Bulletin A310–28–2148, Revision 01, dated October 29, 2002.

Actions Accomplished Previously

(b) Modification of the routing of wires accomplished before the effective date of this AD per Airbus Service Bulletin A310–28–2148, dated January 23, 2002, is acceptable for compliance with the corresponding requirements of paragraph (a) of this AD.

Alternative Methods of Compliance

(c) In accordance with 14 CFR 39.19, the Manager, International Branch, ANM–116, Transport Airplane Directorate, FAA, is authorized to approve alternative methods of compliance for this AD.

Note 1: The subject of this AD is addressed in French airworthiness directive 2002–578(B), dated November 27, 2002.

Issued in Renton, Washington, on May 5, 2004.

Ali Bahrami,

Acting Manager, Transport Airplane Directorate, Aircraft Certification Service.

[FR Doc. 04–11040 Filed 5–14–04; 8:45 am]

BILLING CODE 4910–13–P

DEPARTMENT OF LABOR

Occupational Safety and Health Administration

29 CFR Part 1926

[Docket No. S–030]

RIN 1218–AC01

Safety Standards for Cranes and Derricks

AGENCY: Occupational Safety and Health Administration (OSHA), U.S. Department of Labor.

ACTION: Notice of changes in dates and times of June Negotiated Rulemaking Committee meeting.

SUMMARY: The Occupational Safety and Health Administration (OSHA) announces that the Crane and Derrick Negotiated Rulemaking Advisory Committee (C–DAC) has extended the dates and times of the June meeting in Phoenix, AZ. The meeting will be on June 1, 2, 3 and 4, 2004 and held at the Home Builders Association of Central Arizona facility located at 3200 East Camelback Road, Suite 180, Phoenix, AZ 85018. The June meeting will begin at 1 p.m. on June 1st and 8:30 a.m. on June 2, 3, and 4. The meeting is expected to last three and a half days. The Committee will review summary notes of the prior meeting and review draft regulatory text. The meeting will be open to the public. For more details, please see the original June **Federal Register** notice published at Volume 69 of the **Federal Register**, page 22748, April 27, 2004.

Signed at Washington, DC, this 11th day of May, 2004.

John L. Henshaw,

Assistant Secretary of Labor for Occupational Safety and Health.

[FR Doc. 04–11099 Filed 5–14–04; 8:45 am]

BILLING CODE 4510–26–P

DEPARTMENT OF HOMELAND SECURITY

Coast Guard

33 CFR Part 117

[CGD05–04–052]

RIN 1625–AA09

Drawbridge Operation Regulation; Spa Creek, Annapolis, MD

AGENCY: Coast Guard, DHS.

ACTION: Notice of proposed rulemaking.

SUMMARY: The Commander, Fifth Coast Guard District, is proposing to change the regulations that govern the operation of the S181 Bridge, mile 4.0, across Spa Creek, at Annapolis, Maryland. These regulations are necessary to facilitate public safety and expedite vehicular traffic from the city of Annapolis after the annual fireworks display. This proposed change to the drawbridge operation schedule will allow the S181 Bridge to remain in the closed position from 8:30 p.m. to 11 p.m. on July 4, of every year. In the event of inclement weather, the alternate date is July 5.

DATES: Comments and related material must reach the Coast Guard on or before July 16, 2004.

ADDRESSES: You may mail comments and related material to the Commander (oan–b), Fifth Coast Guard District, Federal Building, 4th Floor, 431 Crawford Street, Portsmouth, Virginia 23703–5004. Comments and material received from the public, as well as documents indicated in this preamble as being available in the docket, will become part of this docket and will be available for inspection or copying at the above address between 8 a.m. and 4 p.m., Monday through Friday, except Federal holidays.

FOR FURTHER INFORMATION CONTACT: Gary S. Heyer, Bridge Management Specialist, Fifth Coast Guard District, at (757) 398–6227.

SUPPLEMENTARY INFORMATION:

Request for Comments

We encourage you to participate in this rulemaking by submitting comments and related material. If you do so, please include your name and address, identify the docket number for this rulemaking (CGD05–04–052), indicate the specific section of this document to which each comment applies, and give the reason for each comment. Please submit all comments and related material in an unbound format, no larger than 8½ by 11 inches, suitable for copying. If you would like to know they reached us, please enclose

a stamped, self-addressed postcard or envelope. We will consider all comments and material received during the comment period. We may change this proposed rule in view of them.

Public Meeting

We do not plan to hold a public meeting. But you may submit a request for a meeting by writing to the Commander, Fifth Coast Guard District at the address under **ADDRESSES** explaining why one would be beneficial. If we determine that one would aid this rulemaking, we will hold one at a time and place announced by a later notice in the **Federal Register**.

Background and Purpose

The City of Annapolis Recreation and Parks Department (the Department) on behalf of Maryland Department of Transportation, who owns and operates the S181 Bridge, requested a change to the operating regulations set out in 33 CFR 117.571.

In accordance with 33 CFR 117.37(a) for reasons of public safety or for public functions, the District Commander may authorize the opening and closing of a drawbridge for a specified period of time.

Due to the high volume of spectators that attend this annual event, it is necessary to close the draw span to vessels between the hours of 8:30 p.m. to 11 p.m. to help expedite exiting vehicular traffic from the City of Annapolis after the fireworks display. This will reduce vehicular traffic congestion and increase public safety because the S181 Bridge is the largest bridge exiting the area.

The proposed change would allow the S181 Bridge to remain in the closed position from 8:30 p.m. to 11 p.m. on July 4, of every year. In the event of inclement weather, the alternate date is July 5.

Since the Annapolis Fireworks Display is a well-known annual event, and it is publicly advertised, vessel operators can arrange their transits to minimize any impact caused by the closure. Vessels with a mast height less than 15 feet may still transit under the Spa Creek Bridge during this event.

Discussion of Proposed Rule

We propose to amend the current operating regulation set out in 33 CFR 117.571. Currently, the regulations require that on Federal holidays the draw shall open on the hour and half hour for vessels waiting to pass.

A new paragraph will be added to § 117.571, which allows the Spa Creek Bridge to remain in the closed position from 8:30 p.m. to 11 p.m. on July 4, of every year. In the event of inclement weather, the alternate date is July 5.

Regulatory Evaluation

This proposed rule is not a ''significant regulatory action'' under section 3(f) of Executive Order 12866, Regulatory Planning and Review, and does not require an assessment of potential costs and benefits under section 6(a)(3) of that Order. The Office of Management and Budget has not reviewed it under that Order. It is not ''significant'' under the regulatory policies and procedures of the Department of Homeland Security (DHS).

We expect the economic impact of this proposed rule to be so minimal that a full Regulatory Evaluation under the regulatory policies and procedures of DHS is unnecessary.

This conclusion was based on the fact that the proposed change will have a very limited impact on maritime traffic transiting this area. Since Spa Creek will remain open to navigation during this event, mariners with mast height less than 15 feet may still transit through the S181 Bridge.

Small Entities

Under the Regulatory Flexibility Act (5 U.S.C. 601–612), we have considered whether this rule would have a significant economic impact on a substantial number of small entities. The term ''small entities'' comprises small businesses, not-for-profit organizations that are independently owned and operated and are not dominant in their fields, and governmental jurisdictions with populations of less than 50,000.

The Coast Guard certifies under 5 U.S.C. 605(b) that this proposed rule would not have a significant economic impact on a substantial number of small entities.

The proposed rule would not have a significant economic impact on a substantial number of small entities because even though the rule closes the S181 Bridge to mariners, those with mast heights less than 15 feet will still be able to transit through the bridge during the closed hours and mariners whose mast heights are greater than 15 feet will be able to use the Atlantic Ocean as an alternate route or transit after the closed hours.

Assistance for Small Entities

Under section 213(a) of the Small Business Regulatory Enforcement Fairness Act of 1996 (Pub. L. 104–121), we offered to assist small entities in understanding the rule so that they could better evaluate its effects on them and participate in the rulemaking process.

Collection of Information

This proposed rule would call for no new collection of information under the Paperwork Reduction Act of 1995 (44 U.S.C. 3501–3520.).

Federalism

A rule has implications for federalism under Executive Order 13132, Federalism, if it has a substantial direct effect on State or local governments and would either preempt State law or impose a substantial direct cost of compliance on them. We have analyzed this proposed rule under that Order and have determined that it does not have implications for federalism.

Unfunded Mandates Reform Act

The Unfunded Mandates Reform Act of 1995 (2 U.S.C. 1531–1538) requires Federal agencies to assess the effects of their discretionary regulatory actions. In particular, the Act addresses actions that may result in the expenditure by a State, local, or tribal government, in the aggregate, or by the private sector of $100,000,000 or more in any one year. Though this proposed rule will not result in such expenditure, we do discuss the effects of this rule elsewhere in this preamble.

Taking of Private Property

This proposed rule would not affect a taking of private property or otherwise have taking implications under Executive Order 12630, Governmental Actions and Interference with Constitutionally Protected Property Rights.

Civil Justice Reform

This proposed rule meets applicable standards in section 3(a) and 3(b)(2) of Executive Order 12988, Civil Justice Reform, to minimize litigation, eliminate ambiguity, and reduce burden.

Protection of Children

We have analyzed this proposed rule under Executive Order 13045, Protection of Children from Environmental Health Risks and Safety Risks. This rule is not an economically significant rule and would not create an environmental risk to health or risk to safety that might disproportionately affect children.

Indian Tribal Governments

This proposed rule does not have tribal implications under Executive Order 13175, Consultation and Coordination with Indian Tribal

Governments, because it would not have a substantial direct effect on one or more Indian tribes, on the relationship between the Federal Government and Indian tribes, or on the distribution of power and responsibilities between the Federal Government and Indian tribes.

Energy Effects

We have analyzed this proposed rule under Executive Order 13211, Actions Concerning Regulations That Significantly Affect Energy Supply, Distribution, or Use. We have determined that it is not a ''significant energy action'' under that order because it is not a ''significant regulatory action'' under Executive Order 12866 and is not likely to have a significant adverse effect on the supply, distribution, or use of energy. It has not been designated by the Administrator of the Office of Information and Regulatory Affairs as a significant energy action. Therefore, it does not require a Statement of Energy Effects under Executive Order 13211.

Environment

We have analyzed this proposed rule under Commandant Instruction M16475.1D, which guides the Coast Guard in complying with the National Environmental Policy Act of 1969 (NEPA) (42 U.S.C. 4321–4370f), and have concluded that there are no factors in this case that would limit the use of a categorical exclusion under section 2.B.2 of the Instruction. Therefore, this proposed rule is categorically excluded, under figure 2–1, paragraph (32)(e) of the Instruction, from further environmental documentation. Allowing the draw to remain closed for vessels at the times indicated on July 4, of every year would have no individually or cumulatively significant impact on the environment.

List of Subjects in 33 CFR Part 117

Bridges.

Regulations

For the reasons discussed in the preamble, the Coast Guard amends 33 CFR part 117 as follows:

PART 117—DRAWBRIDGE OPERATION REGULATIONS

1. The authority citation for part 117 continues to read as follows:

Authority: 33 U.S.C. 499, Department of Homeland Security Delegation No. 0170.1; 33 CFR 1.05–1(g); section 117.255 also issued under the authority of Pub. L. 102–587, 106 Stat. 5039.

2. Amend § 117.571 by redesignating paragraph (c) as paragraph (c)(1) and adding a new paragraph (c)(2) to read as follows:

§ 117.571 Spa Creek.

* * * * *

(c) * * *

(2) From 8:30 p.m. to 11 p.m. on July 4 of every year, the draw need not open for vessels. In the event of inclement weather, the alternate date is July 5.

* * * * *

Dated: May 5, 2004.

Ben R. Thomason, III,

Captain, U.S. Coast Guard, Acting Commander, Fifth Coast Guard District.

[FR Doc. 04–11151 Filed 5–14–04; 8:45 am]

BILLING CODE 4910–15–P

DEPARTMENT OF HOMELAND SECURITY

Coast Guard

33 CFR Part 117

[CGD05–04–028]

RIN 1625–AA09

Drawbridge Operation Regulations: Anacostia River, Washington, DC

AGENCY: Coast Guard, DHS.

ACTION: Notice of proposed rulemaking.

SUMMARY: The Coast Guard proposes to change the regulations that govern the operation of the CSX Transportation (CSX) Railroad Bridge across Anacostia River, at mile 3.4, in Washington, DC. The proposed rule would eliminate the need for a bridge tender by allowing the bridge to be operated from a remote location. This proposed change would maintain the bridge's current level of operational capabilities and continue providing for the reasonable needs of rail transportation and vessel navigation.

DATES: Comments and related material must reach the Coast Guard on or before July 16, 2004.

ADDRESSES: You may mail comments and related material to Commander (obr), Fifth Coast Guard District, Federal Building, 4th Floor, 431 Crawford Street, Portsmouth, Virginia 23704–5004, or they may be hand delivered to the same address between 8 a.m. and 4 p.m., Monday through Friday, except Federal holidays. The Commander (obr), Fifth Coast Guard District maintains the public docket for this rulemaking. Comments and material received from the public, as well as documents indicated in this preamble as being available in the docket, will become part of this docket and will be available for inspection or copying at the above address.

FOR FURTHER INFORMATION CONTACT: Waverly W. Gregory, Jr., Bridge Administrator, Fifth Coast Guard District, at (757) 398–6222.

SUPPLEMENTARY INFORMATION:

Request for Comments

We encourage you to participate in this rulemaking by submitting comments and related material. If you do so, please include your name and address, identify the docket number for this rulemaking CGD05–04–028, indicate the specific section of this document to which each comment applies, and give the reason for each comment. Please submit all comments and related material in an unbound format, no larger than 8½ by 11 inches, suitable for copying. If you would like confirmation to know if they were received, please enclose a stamped, self-addressed postcard or envelope. We will consider all comments and material received during the comment period. We may change this proposed rule in view of those comments.

Public Meeting

We do not now plan to hold a public meeting. But you may submit a request for a meeting by writing to the Commander, Fifth Coast Guard District at the address under **ADDRESSES** explaining why one would be beneficial. If we determine that one would aid this rulemaking, we will hold one at a time at a place announced by a later notice in the **Federal Register**.

Background and Purpose

This rule proposes to allow the CSX Railroad Bridge, which crosses the Anacostia River at mile 3.4, in Washington, DC, to be operated from a remote location at the Benning Yard office. CSX, who owns and operates this movable (vertical lift-type) bridge, requested changes to the operating procedures for the drawbridge. The bridge has a vertical clearance in the closed position to vessels of eight feet at mean low water and five feet at mean high water. Currently, 33 CFR 117.253 (b) requires the bridge to open on signal: at all times for public vessels of the United States, state and local government vessels, commercial vessels, and any vessels in an emergency involving danger to life or property; between 9 a.m. and 12 noon and between 1 p.m. and 6 p.m. from May 15 through September 30; between 6 p.m. and 7 p.m. from May 15 through September 30 if notice is given to the bridge tender not later than 6 p.m. on the day for which the opening is requested; and at all other times, if at least eight hours notice is given.

CSX proposes to remotely operate the opening and closing of the CSX Railroad Bridge across Anacostia River in Washington, DC, from the Benning Yard office, one mile away. CSX has installed motion sensors, laser scanners and high-resolution video cameras on the bridge to enhance the remote operator's ability to monitor and control the equipment. The Benning Yard office is also equipped with an amplified open-mike from the bridge to enable the remote operator to hear boat horns that may signal for an opening. CSX has also installed additional safety warning lights to the bridge for the remote operation. All aspects of the current drawbridge operating regulations will remain the same.

This change is being requested to save operational costs by eliminating the bridge tenders, maintain the bridge's current level of operating capabilities and continue providing for the reasonable needs of rail transportation and vessel navigation.

Discussion of Proposed Rule

The Coast Guard proposes to revise 33 CFR 117.253 by amending paragraph (b), which governs the CSX Railroad Bridge, at mile 3.4, across Anacostia River in Washington, DC.

Paragraph (b) would contain the proposed rule for CSX Railroad Bridge, mile 3.4, at Washington DC. The rule would allow the draw of the bridge to be operated by the controller at the Benning Yard office.

In the event of failure or obstruction of the motion sensors, laser scanners, video cameras or marine-radio communications, the CSX Railroad Bridge would not be operated from the remote location. In these situations, a bridge tender must be called and on-site within 30 minutes to operate the bridge.

When rail traffic has cleared, a horn will sound one prolonged blast followed by one short blast to indicate that the CSX Railroad Bridge is moving to the full open position to vessels. During open span movement, the channel traffic lights will flash red, until the bridge is in the full open position to vessels. In the full open position to vessels, the bridge channel traffic lights will flash green. Except as provided in 33 CFR 117.31(b), the opening of the draw to vessels will not exceed ten minutes after rail traffic has cleared the bridge.

During closing span movement, the channel traffic lights will flash red, the horn will sound five short blasts, and an audio voice-warning device will announce bridge movement. Five short blasts of the horn will continue until the bridge is seated and locked down. When the bridge is seated and locked down to vessels, the channel traffic lights will continue to flash red.

The provision requiring signs containing a 24-hour emergency number under 33 CFR 117.253(b)(3) would be removed to be consistent with the general operating regulations under 33 CFR 117.55. This provision delineated in 33 CFR 117.55 requires owners of each drawbridge to display informational signs. Prior to approval, these signs are reviewed by the Coast Guard to insure all pertinent information is included.

The proposed rule would also change the name of the bridge from ''CONRAIL'' to ''CSX Railroad''. The name change will accurately reflect the name of this bridge.

Regulatory Evaluation

This rule is not a ''significant regulatory action'' under section 3(f) of Executive Order 12866, Regulatory Planning and Review, and does not require an assessment of potential costs and benefits under section 6(a)(3) of that Order. The Office of Management and Budget has not reviewed it under that Order. It is not ''significant'' under the regulatory policies and procedures of the Department of Homeland Security.

We expect the economic impact of this proposed rule to be so minimal that a full Regulatory Evaluation under the regulatory policies and procedures of DHS is unnecessary. We reached this conclusion based on the fact that the proposed changes have only a minimal impact on maritime traffic transiting the bridge. Although the CSX Railroad Bridge will be operated from a remote location, mariners can continue their transits because all aspects of the current operating regulations remain essentially the same.

Small Entities

Under the Regulatory Flexibility Act (5 U.S.C. 601–612), we have considered whether this proposed rule would have a significant economic impact on a substantial number of small entities. The term ''small entities'' comprises small businesses, not-for-profit organizations that are independently owned and operated and are not dominant in their fields, and governmental jurisdictions with populations of less than 50,000.

The Coast Guard certifies under 5 U.S.C. 605(b) that this proposed rule would not have a significant economic impact on a substantial number of small entities.

This proposed rule would not have a significant economic impact on a substantial number of small entities for the following reasons. The rule allows the CSX Railroad Bridge to operate remotely and mariners will continue to plan their transits in accordance with the existing bridge operating regulations.

If you think that your business, organization, or governmental jurisdiction qualifies as a small entity and that this rule would have a significant economic impact on it, please submit a comment (*see* **ADDRESSES**) explaining why you think it qualifies and how and to what degree this rule would economically affect it.

Assistance for Small Entities

Under section 213(a) of the Small Business Regulatory Enforcement Fairness Act of 1996 (Public Law 104–121), we want to assist small entities in understanding this proposed rule so that they can better evaluate its effects on them and participate in the rulemaking process. If the rule would affect your small business, organization, or governmental jurisdiction and you have questions concerning its provisions or options for compliance, please contact Waverly W. Gregory, Jr., Bridge Administrator, Fifth Coast Guard District, (757) 398–6222.

Collection of Information

This proposed rule would call for no new collection of information under the Paperwork Reduction Act of 1995 (44 U.S.C. 3501–3520).

Federalism

A rule has implications for federalism under Executive Order 13132, Federalism, if it has a substantial direct effect on State or local governments and would either preempt State law or impose a substantial direct cost of compliance on them. We have analyzed this rule under that Order and have determined that it does not have implications for federalism.

Unfunded Mandates Reform Act

The Unfunded Mandates Reform Act of 1995 (2 U.S.C. 1531–1538) requires Federal agencies to assess the effects of their discretionary regulatory actions. In particular, the Act addresses actions that may result in the expenditure by a State, local, or tribal government, in the aggregate, or by the private sector of $100,000,000 or more in any one year. Though this proposed rule would not result in such an expenditure, we do discuss the effects of this rule elsewhere in this preamble.

Taking of Private Property

This proposed rule would not affect a taking of private property or otherwise

have taking implications under Executive Order 12630, Governmental Actions and Interference with Constitutionally Protected Property Rights.

Civil Justice Reform

This proposed rule meets applicable standards in sections 3(a) and 3(b)(2) of Executive Order 12988, Civil Justice Reform, to minimize litigation, eliminate ambiguity, and reduce burden.

Protection of Children

We have analyzed this proposed rule under Executive Order 13045, Protection of Children from Environmental Health Risks and Safety Risks. This rule is not an economically significant rule and would not create an environmental risk to health or risk to security that might disproportionately affect children.

Indian Tribal Governments

This proposed rule does not have tribal implications under Executive Order 13175, Consultation and Coordination with Indian Tribal Governments, because it would not have a substantial direct effect on one or more Indian tribes, on the relationship between the Federal Government and Indian tribes, or on the distribution of power and responsibilities between the Federal Government and Indian tribes.

Energy Effects

We have analyzed this proposed rule under Executive Order 13211, Actions Concerning Regulations That Significantly Affect Energy Supply, Distribution, or Use. We have determined that it is not a ''significant energy action'' under that order because it is not a ''significant regulatory action'' under Executive Order 12866 and is not likely to have a significant adverse effect on the supply, distribution, or use of energy. It has not been designated by the Administrator of the Office of Information and Regulatory Affairs as a significant energy action. Therefore, it does not require a Statement of Energy Effects under Executive Order 13211.

Environment

We have analyzed this rule under Commandant Instruction M16475.1D, which guides the Coast Guard in complying with the National Environmental Policy Act of 1969 (NEPA) (42 U.S.C. 4321–4370f), and have concluded that there are no factors in this case that would limit the use of a categorical exclusion under section 2.B.2 of the Instruction. Therefore, this rule is categorically excluded, under figure 2–1, paragraph (32)(e) of the Instruction, from further environmental documentation because it has been determined that the promulgation of operating regulations for drawbridges are categorically excluded.

List of Subjects in 33 CFR Part 117

Bridges.

For the reasons discussed in the preamble, the Coast Guard proposes to amend 33 CFR part 117 as follows:

PART 117—DRAWBRIDGE OPERATION REGULATIONS

1. The authority citation for part 117 continues to read as follows:

Authority: 33 U.S.C. 499; 33 CFR 1.05–1(g); Department of Homeland Security Delegation No. 0170.1; section 117.255 also issued under the authority of Pub. L. 102–587, 106 Stat. 5039.

2. Revise paragraph (b) of § 117.253 to read as follows:

§ 117.253 Anacostia River.

* * * * *

(b) The CSX Railroad Bridge, mile 3.4.

(1) The draw of the bridge to be operated by the controller at the Benning Yard office shall open on signal:

(i) At all times for public vessels of the United States, state and local government vessels, commercial vessels, and any vessels in an emergency involving danger to life or property.

(ii) Between 9 a.m. and 12 p.m., and between 1 p.m. and 6 p.m., from May 15 through September 30.

(iii) Between 6 p.m. and 7 p.m., from May 15 through September 30 if notice is given to the controller at the Benning Yard office not later than 6 p.m. on the day for which the opening is requested.

(iv) At all other times, if at least eight hours notice is given to the controller at the Benning Yard office.

(2) The CSX Railroad Bridge shall not be operated by the controller at the Benning Yard office in the event of failure or obstruction of the motion sensors, laser scanners, video cameras or marine-radio communications. In these situations, a bridge tender must be called to operate the bridge on-site.

(3) Except as provided in § 117.31(b), opening of the draw shall not exceed ten minutes after clearance of rail traffic.

(4) A horn will sound one prolonged blast followed by one short blast to indicate that the CSX Railroad Bridge is moving to the full open position for vessel traffic. During open span movement, the channel traffic lights will flash red until the bridge is in the full open position to vessels. In the full open position to vessels, the bridge channel traffic lights will flash green.

(5) A horn will sound five short blasts, the channel traffic lights will flash red, and an audio voice-warning device will announce bridge movement during closing span movement. Five short blasts of the horn will continue until the bridge is seated in and locked down. When the bridge is seated and in locked down position to vessels, the channel traffic lights will continue to flash red.

(6) The owners of the bridge shall provide and keep in good legible condition two board gauges painted white with black figures not less than six inches high to indicate the vertical clearance under the closed draw at all stages of the tide. The gauges shall be placed on the bridge so that they are plainly visible to the operator of any vessel approaching the bridge from either upstream or downstream.

Dated: May 6, 2004.

Ben R. Thomason, III,

Captain, U.S. Coast Guard, Acting Commander, Fifth Coast Guard District.

[FR Doc. 04–11149 Filed 5–14–04; 8:45 am]

BILLING CODE 4910–15–P

FEDERAL COMMUNICATIONS COMMISSION

47 CFR Parts 2, 73, and 74

[MM Docket No. 99–325; FCC 04–99]

Digital Audio Broadcasting Systems and Their Impact on the Terrestrial Radio Broadcast Service

AGENCY: Federal Communications Commission.

ACTION: Notice of proposed rulemaking.

SUMMARY: In this document, the Commission seeks comment on policies it may adopt to encourage broadcasters to convert from an analog-only radio service to a hybrid analog/digital radio service, and eventually, to an all-digital radio service. The Commission seeks comment on what changes and amendments to its technical rules are necessary to further the introduction of digital audio broadcasting (''DAB''). The Commission seeks specific comment on proposals to allow AM nighttime digital service. The Commission asks whether a radio station should be allowed to offer a high definition service, a multiplexed service, a datacasting service, or a combination of all of these possibilities. The Commission also seeks comment on which of its existing programming and operational rules should be applied to DAB.

DATES: Comments due June 16, 2004; reply comments are due July 16, 2004.

ADDRESSES: Federal Communications Commission, 445 12th Street, SW., Washington, DC 20554. For further filing information, see **SUPPLEMENTARY INFORMATION.**

FOR FURTHER INFORMATION CONTACT: Ben Golant, 202–418–7111 or *Ben.Golant@fcc.gov.*

SUPPLEMENTARY INFORMATION: This is a synopsis of the Further Notice of Proposed Rulemaking portion of the Commission's Further Notice of Proposed Rulemaking (''FNPRM'') and Notice of Inquiry, FCC 04–99, adopted April 15, 2004 and released April 20, 2004. The full text of the Commission's FNPRM is available for inspection and copying during normal business hours in the FCC Reference Center (Room CY–A257) at its headquarters, 445 12th Street, SW., Washington, DC 20554, or may be purchased from the Commission's copy contractor, Qualex International, (202) 863–2893, Portals II, Room CY–B402, 445 12th St., SW., Washington, DC 20554, or may be reviewed via Internet at *http://www.fcc.gov/mb.*

Synopsis of the Further Notice of Proposed Rulemaking

1. In the *Digital Audio Broadcasting* Report and Order (''*DAB R&O*''), 67 FR 78193–01 (Dec. 23, 2002) we selected in-band, on-channel (''IBOC'') as the technology enabling AM and FM radio broadcast stations to commence digital operations. We announced notification procedures that will allow operating AM and FM radio stations to begin digital transmissions immediately on an interim basis using the IBOC system developed by iBiquity Digital Corporation (''iBiquity''). We concluded that the adoption of a single IBOC transmission standard will facilitate the development of digital services for terrestrial broadcasters. We also stated that the dramatic improvement in digital audio quality would outweigh any limits on analog operations and those broadcasters concerned about the loss of bandwidth may nevertheless continue to operate in an analog-only mode. We, however, deferred consideration of final operational requirements and related broadcast licensing and service rule changes to a future date. In this *Further Notice of Proposed Rule Making* (''*FNPRM*''), we seek comment on what rule changes are necessary due to the advent of digital audio broadcasting (''DAB''). Through this proceeding, we seek to foster the development of a vibrant terrestrial digital radio service for the public and seek to ensure that radio broadcasters will successfully implement DAB.

2. iBiquity's IBOC DAB technology provides for enhanced sound fidelity, improved reception, and new data services. IBOC is a method of transmitting near-CD quality audio signals to radio receivers along with new data services such as station, song and artist identification, stock and news information, as well as local traffic and weather bulletins. This technology allows broadcasters to use their current radio spectrum to transmit AM and FM analog signals simultaneously with new higher quality digital signals. These digital signals eliminate the static, hiss, pops, and fades associated with the current analog radio system. IBOC was designed to bring the benefits of digital audio broadcasting to analog radio while preventing interference to the host analog station and stations on the same channel and adjacent channels. IBOC technology makes use of the existing AM and FM bands (In-Band) by adding digital carriers to a radio station's analog signal, allowing broadcasters to transmit digitally on their existing channel assignments (On-Channel). iBiquity IBOC technology will also allow for radios to be ''backward and forward'' compatible, allowing them to receive traditional analog broadcasts from stations that have yet to convert and digital broadcasts from stations that have converted. Current analog radios will continue to receive the analog portions of the broadcast.

3. The iBiquity IBOC systems evaluated by the DAB Subcommittee of the National Radio Systems Committee (''NRSC'') are ''hybrids'' in that they permit the transmission of both the analog and digital signals within the spectral emission mask of a single AM or FM channel. In the hybrid mode, the iBiquity system places digital information on frequencies immediately adjacent to the analog signal. The digital signals are transmitted using orthogonal frequency division multiplexing (''OFDM''). The FM IBOC system has an extended hybrid mode, with greater digital capacity than the hybrid mode. However, neither the extended hybrid FM system nor the all-digital systems have been tested by the NRSC.

4. The digital system uses perceptual coding to discard information that the human ear cannot hear. This reduces the amount of digital information, and therefore the frequency bandwidth, required to transmit a high-quality digital audio signal. In addition, the iBiquity hybrid system is designed to blend to FM analog when digital reception fails. This blending feature eliminates a digital ''cliff effect,'' that would otherwise result in the complete and abrupt loss of reception at locations where the digital signal fails.

5. In 1990, the Commission first considered the feasibility of terrestrial and satellite digital radio services. As to the former, the Commission concluded that the digital terrestrial systems then under consideration were undeveloped and that it was premature to engage in discussions regarding DAB standards, testing, licensing, and policy issues. In 1999, the Commission, recognizing that the appropriate technology had matured, commenced this proceeding to foster the further development of IBOC systems and develop a record regarding the issues raised by the introduction of DAB. In the *DAB NPRM,* the Commission, *inter alia,* proposed criteria for the evaluation of DAB models and systems and considered certain DAB system testing, evaluation, and standard selection issues.

6. Meanwhile, the DAB Subcommittee of the NRSC conducted extensive laboratory tests of several DAB systems. The report of the DAB subcommittee of the NRSC, released on December 3, 2001, evaluated comprehensive field and laboratory tests of the FM IBOC system. The NRSC FM report concluded ''that the iBiquity FM IBOC system as tested by the NRSC should be authorized by the FCC as an enhancement to FM broadcasting in the U.S., charting the course for an efficient transition to digital broadcasting with minimal impact on existing analog FM reception and no new spectrum requirements.'' The Commission sought comment on the NRSC FM report and its conclusions with respect to the Commission's stated DAB policy goals and selection criteria. Thereafter, on April 16, 2002, the NRSC filed its evaluation of iBiquity's AM hybrid system, on which the Commission sought comment in a subsequent public notice. The NRSC AM report concluded that iBiquity ''has developed an attractive solution to improve AM listening based on the best of today's available technology.'' NRSC recommended that iBiquity IBOC should be authorized as a daytime-only enhancement to AM broadcasting, pending further study of AM IBOC performance under nighttime propagation conditions. Based on the record developed in this proceeding at that time, iBiquity and others urged the Commission to permit broadcasters to initiate IBOC transmission on an interim basis prior to the adoption of new licensing rules and procedures.

7. In the *DAB R&O,* we selected the hybrid AM and FM IBOC systems tested by the NRSC as *de facto* standards for interim digital operation. As of the

effective date of the *DAB R&O,* we stated we would no longer entertain any proposal for digital radio broadcasting other than IBOC. We stated that IBOC was the best way to advance our DAB policy goals. We found that this technology was supported in the broadcast industry and was the only approach that could be implemented in the near future. We also found that the iBiquity IBOC system was spectrum-efficient in that it can accommodate digital operations for all existing AM and FM radio stations with no additional allocation of spectrum. The NRSC tests, as explained in the *DAB R&O,* showed that both AM and FM IBOC systems offer enhanced audio fidelity and increased robustness to interference and other signal impairments. The tests also indicated that coverage for both systems would be at least comparable to analog coverage. We stated that audio fidelity and robustness will greatly improve when radio stations move to digital operations.

8. AM radio has presented certain challenges and concerns in this proceeding. In the *DAB R&O,* we held that AM stations must transmit IBOC signals during daytime hours only, pending a favorable evaluation of AM IBOC under nighttime propagation conditions. Moreover, AM stations implementing IBOC digital transmissions may not simultaneously transmit analog C–QUAM AM stereo. We stated that while we were concerned about the loss of the ''legacy'' AM analog service, each broadcaster had the voluntary option of implementing IBOC. We found that the technical limitations of the analog technology, including narrow bandwidth and susceptibility to manmade and natural noise, continued to undermine its viability. Additionally, we found that the record in this proceeding presented compelling evidence that AM IBOC had the potential to revitalize AM broadcasting and substantially enhance radio service for the listening public.

9. As of December 31, 2003, there were 11,011 commercial radio stations, as well as 2,552 FM educational radio stations in the United States. Of the commercial stations, 6,217 were FM stations and 4,794 were AM stations. There were also 3,834 FM translator and booster stations. As of March 2004, there were 3,285 owners of commercial radio stations across the nation. Also on that date, there were 56 radio station owners with 20 or more stations.

10. Currently, 108 million U.S. households, or 98% of all U.S. households, have a radio device. We estimate that there are, on average, 5 radios per household or about 500 million receivers. We also estimate that by the end of 2003, there were about 225 million motor vehicles on the road with radios. There are also millions of radios in use in other vehicles, such as commercial trucks and watercraft, as well as commercial establishments such as restaurants and hotels. All in all, we estimate that there are nearly 800 million radio sets in use in the United States.

11. Terrestrial radio broadcast service competes against new digital audio technologies offering consumers enhanced sound fidelity and other services, including satellite digital audio radio service. For example, Sirius Satellite Radio Inc. (''Sirius'') and XM Satellite Radio Holdings (''XM'') have built subscription radio services that provide national programming, delivering up to 100 channels of digital music, news, and entertainment directly from satellites to vehicles, homes, and portable radios in the United States. Each company holds one of the two licenses issued by the Commission to build, launch, and operate a national satellite radio system. Both companies launched their services in 2001. XM has about 1,680,000 subscribers and Sirius has over 260,000 subscribers.

12. As of October 1, 2003, over 280 radio stations encompassing more than 100 markets have licensed iBiquity's technology and have begun digital audio broadcasting or are in the process of converting. Cumulatively, these markets include over 145 million listeners or nearly two-thirds of the Arbitron-ranked, listening public. Within each of the six cities—New York, Los Angeles, Chicago, San Francisco, Miami and Seattle ''previously identified by iBiquity as launch markets for DAB, a minimum of ten stations and up to 18 stations have already licensed iBiquity's technology. Stations in 35 states as well as the District of Columbia and Puerto Rico have demonstrated their commitment to digital audio broadcasting as well. Radio manufacturers have slowly begun selling digital radio receivers directly to the public this year.

13. According to iBiquity, the estimated costs for a station to implement its hybrid IBOC system range from $30,000 to $200,000, with an average cost of $75,000. Conversion costs vary depending on the age and other characteristics of a station's transmitter plant and studio equipment. For example, most new broadcast transmitters are IBOC-compatible. In contrast, some stations may need to replace older transmitters, studio-transmitter links, or studio equipment in order to transmit IBOC. Radio broadcasters can implement IBOC using their existing towers, antennas, and transmission lines, making the technology inherently less costly than, for example, the digital television conversion. In addition, broadcasters may begin interim IBOC operations on a voluntary basis, deferring costs as they deem appropriate.

14. iBiquity submitted test results for both AM and FM all-digital modes. The all-digital tests were not performed under the auspices of the NRSC, unlike the tests on iBiquity's hybrid IBOC systems. iBiquity requested that the Commission endorse its all-digital systems as well as the hybrid systems. In the *DAB R&O,* we recognized that although a fully digital terrestrial radio service is the ultimate goal, it was premature to endorse systems that have not been subject to comprehensive and impartial testing. We also stated that the adoption of an all-digital standard requires the consideration of novel and complex technical and policy issues that arise only when the constraints of ''designing around'' the legacy analog transmission standard are eliminated, and we therefore deferred any action on these matters. We recognize that the standard setting bodies have much work to do on an all-digital radio system and we have no standard to evaluate or seek comment upon. Instead, we seek comment on the pace of the analog to hybrid radio conversion and the possibility of an all-digital terrestrial radio system in the future.

15. Congress codified December 31, 2006, as the analog television termination date, but also adopted certain exceptions to that deadline. There is no analogous Congressional mandate for the termination of analog radio broadcasting. We have not considered a date certain when radio stations should commence digital broadcast operations because radio stations are not using additional spectrum to provide digital service, as is the case with digital television, and band-clearing is not required by statute. Based on these factors, we see no immediate need to consider mandatory transition policies of the type contemplated with respect to DTV. However, we recognize the spectrum efficiencies and related new service opportunities inherent in the IBOC system. We also want to enable terrestrial radio broadcasters to better compete with satellite radio services now in operation. As such, we seek comment on what changes in our rules would likely encourage radio stations to convert to a hybrid or an all-digital format.

16. We ask whether the government, the marketplace, or both, should determine the speed of conversion from analog to hybrid, and eventually, to digital radio service, at this time. We understand that the interests of radio listeners are paramount and we do not want to disadvantage any member of the public by forcing the purchase of new radios. In many ways, the move to DAB is similar to the transition from black and white to color television in the 1950s and 1960s, where consumers could continue to receive local television signals even though they may not have had a color television to receive programming in color. In the color television transition, marketplace forces stimulated the introduction of color sets. As a result, television producers eventually ended program production in a black and white format. Here, we anticipate that the more DAB receivers sold, the more radio stations will have an incentive to convert to DAB, and the cycle will repeat itself until all consumers have DAB receivers. We intend to rely on the marketplace to the greatest extent feasible. However, if the marketplace falters, we seek comment on other means to advance the introduction of DAB. In this context, we ask whether we should conduct periodic reviews, in terms of DAB receivers on the market and the number of DAB stations on-the-air, to help us decide what is in the best interests of the public and the broadcasting industry. If so, how frequently should we initiate such reviews?

17. The DAB system provides broadcasters with new flexibility and new capabilities. For example, DAB allows a radio station to scale the digital portion of its hybrid FM broadcast from 96 kbps to lower rates in order to set aside capacity for other associated services. The FM system can be scaled from 96 kbps to 84 kbps or 64 kbps to obtain 12 to 32 kbps for other services. The system also allows broadcasters to use the ''extended hybrid modes'' whereby the digital sidebands are extended closer to the analog signal. This allows the broadcaster to obtain 12.5 to 50 kbps of capacity for other services. Broadcasters will be capable of providing through DAB not only a vastly improved high definition audio signal, but also multiple streams of digital audio programming. In addition, the system is capable of non-broadcast uses that are non-audio and/or subscription-based in nature. A flexible DAB service policy would likely increase the ability of broadcasters to compete in an increasingly competitive marketplace, and would allow them to serve the public with new and innovative services. Flexibility could also allow for a more rapid conversion to digital radio. While we tentatively find that a flexible service policy is in the public interest, we seek comment on the following issues before making a final determination.

18. *High Definition Digital Audio Broadcasting.* We seek comment on whether or not we should require broadcasters to provide a minimum amount of high definition audio and, if so, what minimum amount should be required. The public may be served by such a policy because radio stations would provide a free programming alternative to satellite radio and compact discs. We also seek comment on the amount of capacity necessary to allow radio stations to broadcast a high quality digital signal and permit the introduction of new datacasting and supplemental audio services. If we adopt a high definition service requirement, should we have separate rules for AM and FM stations?

19. *Digital Audio Multicasting.* The DAB system permits a radio station to broadcast multiple audio programming services within its assigned channel. National Public Radio in fact, is now testing such a broadcasting model under the auspices of its ''Tomorrow Radio Project.'' DAB makes it possible for hybrid and digital radio stations to air not only more music programming, but also public safety services (*e.g.*, national security announcements), assisted living services (*e.g.*, radio reading services), non-English language programming, and news services to underserved populations. We seek comment on how many audio streams a radio station can transmit using IBOC without causing interference or degrading audio quality. Will the availability of additional audio streams spur public demand for digital audio receivers? We seek comment on the ways broadcasters can use this technology to provide greater access to radio for all people. How can the availability of additional audio streams further our diversity goals, particularly for people with disabilities and minority or underserved segments of the community? We tentatively conclude that adopting DAB service rules that encourage more audio streams would promote program diversity, and that, once the Commission adopts a policy in this area, radio stations will no longer need to obtain experimental authority to broadcast multiplexed digital programming.

20. We seek comment on to what extent we should permit radio stations to lease unused or excess airtime to unaffiliated audio programmers. In this context, an unaffiliated entity would schedule the programming output of a particular digital audio stream for a period of time under a contract with the licensee. Radio stations may benefit from leasing unused or excess airtime because they would have additional funds to invest into new programming, which in turn, would benefit the public. We seek comment on whether our diversity goals will be furthered if we allow independent programmers to lease excess capacity from broadcast licensees? How should current regulations, such as our sponsorship identification rules, be applied in this situation? Should the licensee be responsible for ensuring the fulfillment of all regulatory obligations, as is the case for digital television stations? How does section 310(d) of the Act, regarding transfers of control, apply in this situation? Moreover, how would the Commission's broadcast ownership limits and attribution rules be affected if an unaffiliated programmer, that is also the licensee of another station in the same market, leases one of the additional audio streams? Should there be an overall limit to the amount of programming time a particular radio station can lease to others?

21. Section 73.277 of the Commission's rules pertains to the permissible transmissions of an FM licensee. Under our rules, an FM broadcast licensee or permittee cannot enter into any agreement to supply on its main channel background music or other subscription service (including storecasting) for reception in the place of business of any subscriber. We seek comment on how this rule should apply to digital audio multicasting. Specifically, should this rule be applied to any additional audio services that may be broadcast or should such additional audio channels be exempt from the rule?

22. *Datacasting.* All FM analog stations are authorized to transmit secondary services via an automatic subsidiary communications authorization (''SCA'') under § 73.295 of the Commission's rules. Subsidiary communication services are those transmitted on a subcarrier within the FM baseband signal, not including services that enhance the main program broadcast service or exclusively relate to station operations. Subsidiary communications include, but are not limited to, services such as functional music, specialized language programs, radio reading services, utility load management, market and financial data and news, paging and calling, traffic control signal switching, bilingual television audio, and point to point or

multipoint messages. Some FM broadcasters currently provide emergency alert system notifications and paging functions.

23. Section 73.593 of the Commission's rules pertains to subsidiary communications services broadcast by noncommercial educational FM radio stations. Under our rules, the licensee of a noncommercial educational FM station is not required to use its subcarrier capacity, but if it chooses to do so, it is governed by the SCA rules for commercial FM stations regarding the types of permissible subcarrier uses and the manner in which subcarrier operations are conducted. A significant difference from the commercial FM SCA rules, however, is the requirement that the remunerative use of a noncommercial educational station's subcarrier capacity not be detrimental to the provision of existing or potential radio reading services for the blind or otherwise inconsistent with its public broadcasting responsibilities.

24. Section 73.127 of the Commission's rules is analogous to §§ 73.295 and 73.593 and discusses the use of multiplex transmissions by AM stations. Specifically, the licensee of an AM broadcast station may use its AM carrier to transmit signals not audible on ordinary consumer receivers for both broadcast and non-broadcast purposes. AM carrier services are of a secondary nature under the authority of the AM station authorization, and the authority to provide such communications services may not be retained or transferred in any manner separate from the station's authorization. The grant or renewal of an AM station permit or license is not furthered or promoted by proposed or past multiplexed transmission service. The licensee must establish that the broadcast operation is in the public interest wholly apart from the subsidiary communications services provided. For both AM and FM services, the licensee must retain control over all material transmitted in a broadcast mode via the station's facilities and has the right to reject any material that it deems inappropriate or undesirable.

25. iBiquity, in association with broadcasters and equipment manufacturers, has developed first generation IBOC data services. Using an established standard ID3 format, information services will provide listeners more information on the song, CD title, and artist. In addition, information and host profiles will complement audio commercials and talk radio formats. In the future, Synchronized Multimedia Integration Language (''SMIL''), a protocol used by iBiquity as the foundation for Advanced Application Services (''AAS''), will provide the foundation for the creation and delivery of innovative DAB services. Such advanced services will include commercial applications like: (1) Enhanced information services such as breaking news, sports, weather, and traffic alerts delivered to DAB receivers as a text and/or audio format; (2) listener controlled main audio services providing the ability to pause, store, fast-forward, index, and replay audio programming via an integrated program guide with simplified and standard user interface options; and (3) supplementary data delivery that will spur the introduction of in-vehicle telematics, navigation and rear-seat entertainment programming.

26. We seek comment on whether we should adopt a flexible policy permitting radio stations to produce and distribute any and all types of datacasting services. Alternatively, are there certain types of services that a radio station must provide, such as enhanced emergency alerts, before it is permitted to offer other data services? Are there certain services that should be prohibited? How should §§ 73.127, 73.295, and 73.593 of our rules be amended? How should our sponsorship identification rules apply? As for noncommercial radio stations, we seek comment on what SCA services would be inconsistent with the public broadcasting responsibilities of hybrid or all-digital noncommercial educational stations.

27. DAB interference with analog SCA services has been an issue in this proceeding. iBiquity performed field tests which showed that, in some circumstances, analog SCA receivers may receive significant new interference from IBOC stations operating on second-adjacent channels. Following the tests, NPR commissioned a study using average receiver performance to estimate the number of listeners potentially affected by additional interference from IBOC in the top 16 radio markets. The results show that, on average, additional interference from IBOC could affect 2.6 percent of eligible receivers within an FM station's service area. In the *DAB R&O*, we raised concerns about this level of interference and its potential impact on radio reading services. We now seek comment on measures to protect established SCA services from interference.

28. *Subscription Services.* Radio stations may wish to offer certain digital audio or data content under a subscription model. In this context, subscription services may be available for a fee or the listener may simply need a code to access the service. We seek comment on whether to permit such a use of the broadcast spectrum. Should we allow for subscription services as long as the licensee provides at least one free digital audio stream, as we do for digital television? One proposal would be to permit subscription services as long as they do not derogate the free services a radio station broadcasts. Section 336 of the Act requires the Commission to collect fees from digital television stations if they use their spectrum to offer subscription ancillary and supplementary services. However, there is no analogous requirement for digital audio broadcasting. We seek comment on whether we should impose spectrum fees for that portion of the spectrum used by broadcasters to provide subscription services. Does the Commission have the authority to impose such fees? Under what provisions? What interest would such a fee serve? What factors should the Commission consider in setting the fee level?

29. *Equipment issues.* According to iBiquity, its systems provide extensibility in that the first generation receivers are designed to operate both in the interim hybrid and in all-digital modes. In the *DAB R&O,* we stated that this is an area in which definitive evaluations can only be undertaken after we resolve a number of all-digital issues, such as issues relating to signal architecture. Recognizing the flexibility of the IBOC model, and the possibility of new auxiliary services, we stated that we will address receiver issues in more detail when a formal standard is considered. We seek comment on whether the issues raised, and the policies proposed, in this *FNPRM* require us to address receiver issues at this stage of DAB development. For example, how would the adoption of a high definition audio requirement affect receiver manufacturers? Would current receiver specifications need to be changed if we permit multicasting or subscription services?

30. It is incumbent upon the Commission to ensure that broadcasters serve the ''public interest, convenience and necessity.'' Broadcasters are required to air programming responsive to community needs and interests and have other service obligations. We remain committed to enforcing our statutory mandate to ensure that broadcasters serve the public interest. Our current public interest rules, including those implementing specific statutory requirements, were developed for broadcasters essentially limited by technology to a single, analog audio programming service and minor

ancillary services. The potential for more flexible and dynamic use of the radio spectrum, as a result of IBOC, gives rise to important questions about the nature of public interest obligations in digital broadcasting.

31. As stated above, our future rules may allow broadcasters to use their radio frequencies to provide a high definition audio service, multiple standard definition audio services and perhaps other services, some of which may be on a subscription basis. Digital broadcast licensees have public interest obligations. We seek comment on how to apply such obligations to DAB. For example, if a broadcaster chooses to provide multiple digital audio streams, how should public interest obligations apply? We also seek comment on how certain public interest obligations may be applied to subscription-based DAB services.

32. *Community Needs.* One of a broadcaster's fundamental public interest obligations is to air programming responsive to the needs and interests of its community of license. Another well recognized obligation is for a broadcast licensee to respond to the public's need for emergency information. Digital technology may allow a broadcaster to better fulfill these obligations. We seek comment on ways that a broadcaster can implement digital technology to better and more fully meet the needs of its community of license. How does the ability to multicast affect a broadcaster's ability to fulfill these public interest obligations?

33. *Local Programming.* Localism has been a core requirement of broadcast licensees since the inception of the Act 70 years ago. We seek comment on how digital technology can be used to promote localism in the terrestrial radio service. For example, we seek comment on whether to impose a minimum local origination requirement on digital radio transmissions. If a radio station multiplexes its signal, should each audio stream have a local component? If so, how much? Should that local component include some news or other public affairs programming? In the alternative, should we allow a radio station to carry national programming on one or more of its streams if it devotes one of its streams to local programming?

34. We seek comment on how DAB, and future digital audio services, mesh with current statutory requirements, obligations, and prohibitions. We ask whether the change to digital audio broadcasting justifies changes in the Commission's rules and regulations that implement the following provisions and regulations. We also seek comment on any other specific statutory provisions or regulations, not listed below, that may be affected.

35. *Political Broadcasting.* Sections 312 and 315 of the Act contain the political advertising rules for broadcast stations. Section 312(a)(7) of the Act, as amended, requires broadcasters to allow legally qualified candidates for federal office reasonable access to their facilities. Section 315(a) of the Act, as amended, provides candidates with equal opportunities for broadcast time. We seek comment on how each of these political broadcasting rules should be applied in the DAB context. We also seek comment more generally on whether DAB can enhance political discourse and candidate access to radio in other ways.

36. *Emergency Alert System.* Section 73.1250 of the Commission's rules addresses the broadcasting of emergency information. Under our rules, and if requested by government officials, a station may, at its discretion, and without further FCC authority, transmit emergency point-to-point messages for the purpose of requesting or dispatching aid and assisting in rescue operations. If the Emergency Alert System (''EAS'') is activated for a national emergency while a local area or state emergency operation is in progress, the national level EAS operation must take precedence. AM stations may, without further FCC authority, use their full daytime facilities during nighttime hours to broadcast emergency information when necessary to the safety of life and property, in dangerous conditions of a general nature, and when adequate advance warning cannot be given with the facilities authorized. All emergency alerts must be conducted on a noncommercial basis, but recorded music may be used to the extent necessary to provide program continuity. We tentatively conclude that it is in the public interest to apply the rules provided in § 73.1250 to all audio streams broadcast by a radio station. The purpose of the rule is to fully inform the public of major emergencies and this mandate can only be fulfilled if it is broadly applied.

37. We realize that by requiring AM and FM radio broadcast stations to comply with § 73.1250 of our rules for all audio streams (both analog and DAB), such stations may have to update and/or replace their EAS decoders to accommodate the digital portion of the stream. Nevertheless, we believe that access to emergency information is critical. We seek comment on the costs and timing involved in such compliance. Comments should specifically address the costs to the broadcasters relevant to ensuring that the DAB portion of the audio stream is compliant with § 73.1250 simultaneous with a station's rollout of DAB. Comments should also address the costs to equipment vendors relevant to ensuring that all product development and related certification by the FCC would be complete in time to allow broadcasters to roll out DAB that is compliant with our emergency alert rules.

38. *Station Identification.* Under § 73.1201 of the Commission's rules, broadcast station identification announcements must be made at the beginning and end of each time of operation, and as close to the hour as feasible, at a natural break in program offerings. Official station identification consists of the station's call letters immediately followed by the community or communities specified in its license as the station's location. The name of the licensee or the station's frequency or channel number, or both, as stated on the station's license may be inserted between the call letters and station location. We seek comment on whether the station identification rules would apply to all digital audio content of a radio station. How should a station identify audio channels other than the main channel? Should there be separate call letters for separate streams? There are special rules for simultaneous AM (535–1605 kHz) and (1605–1705 kHz) broadcasts. If the same licensee operates an AM broadcast station in the 535–1605 kHz band and an AM broadcast station in the 1605–1705 kHz band with both stations licensed to the same community and simultaneously broadcasts the same programs over the facilities of both such stations, station identification announcements may be made jointly for both stations for periods of such simultaneous operations. We seek comment on how any proposed rule should differ, if at all, for AM radio stations.

39. There are a host of other programming and operational rules that are relevant here. These include: (1) §§ 73.132 and 73.232—territorial exclusivity for AM and FM stations; (2) § 76.1208—broadcast of taped or recorded material; (3) § 73.1740—minimum hours of operation; (4) § 76.1212—sponsorship identification; (5) § 76.4180—payment disclosure; (6) § 73.4055—cigarette advertising; and (7) § 508 of the Act—prohibited contest practices. We tentatively conclude that the conversion to DAB will not require changes to the content of these regulations. However, we seek comment on how the rules should be applied to

multicast services and whether the requirements apply to subscription services.

40. *AM Definitions.* Section 73.14 of the Commission's rules contains the AM broadcast definitions. For example, the definition of AM broadcast channel is ''the band of frequencies occupied by the carrier and the upper and lower sidebands of an AM broadcast signal with the carrier frequency at the center. Channels are designated by their assigned carrier frequencies. The 117 carrier frequencies assigned to AM broadcast stations begin at 540 kHz and progress in 10 kHz steps to 1700 kHz.'' Numerous references are also made to amplitude modulation in § 73.14. We seek comment on what changes in this section are necessary to accommodate the introduction of digital AM service.

41. *AM Nighttime Operations.* Two characteristics of the AM service have posed challenges to the development of AM IBOC. First, the nominal audio bandwidth of AM radio is insufficient to pass a full-fidelity monaural audio signal. Second, AM propagation characteristics vary drastically between day and night, resulting in two completely different allocation schemes (and, consequently, different daytime and nighttime facilities for most AM stations). During daytime hours, AM signals propagate principally via currents conducted through the earth, called groundwave propagation. Useful groundwave signals have a range of only about 200 miles for the most powerful AM stations, and less than 50 miles for many stations. After sunset, changes in the upper atmosphere cause the reflection of AM signals back to earth, resulting in the transmission of skywave signals over paths that may extend thousands of miles. Nighttime skywave propagation results in a much greater potential for inter-station interference. With the exception of powerful clear channel stations and relatively low-power local stations, many AM stations are required to cease operation at sunset. Most of those that remain on the air at night must reduce power or use directional antenna systems, or both.

42. In the *DAB R&O,* we noted NRSC's finding that ''[t]he design of the AM IBOC system is such that its addition to an AM broadcast signal will cause a reduction in the host analog signal-to-noise performance [*i.e.*, an increase in background noise, perceived as degradation in audio quality] at the receiver.'' The NRSC stated that if the passband of the receiver extends beyond 5 kHz, the receiver will detect the secondary digital carriers, which extend from approximately 5 kHz to 10 kHz above and below the AM carrier frequency. The test results indicated, however, that audio quality should not be degraded sufficiently to impact listening. With regard to the effect on other stations, the NRSC concluded that introduction of hybrid AM IBOC should not cause additional co-channel interference. Because the IBOC digital signal shares spectrum with the analog signal of a first adjacent AM station, however, the NRSC concluded that first adjacent channel compatibility is a significant issue for AM IBOC. We found that the hybrid AM IBOC system proposed by iBiquity had the potential to provide the benefits of digital broadcasting within the framework of the existing AM allocation scheme. We nevertheless agreed with NRSC that significant uncertainty remains with respect to the potential for first adjacent channel interference under nighttime skywave propagation conditions. We therefore deferred authorizing nighttime use of AM IBOC until further testing has been completed.

43. NAB, through its Radio Board, recently submitted recommendations to the Commission concerning nighttime operation of AM IBOC. NAB suggests several steps the Commission should take regarding AM digital service: (1) The current interim authorization for IBOC service should be extended to allow AM IBOC nighttime broadcasts; (2) nighttime authorization should extend to all AM stations currently authorized for nighttime broadcasts; (3) nighttime authorization should be established on a blanket basis for all digital AM stations rather than requiring broadcasters to seek a separate nighttime authorization; and (4) the Commission should address instances of unexpected levels of interference on a case-by-case basis. NAB also suggested that, in the event that there are reductions in stations' primary nighttime analog service areas, the Commission should take steps to address those problems. NAB states that its suggested measures will allow AM stations to ''better understand the opportunities and challenges of IBOC'' and will provide incentives for receiver manufacturers to market IBOC equipment. The staff has issued a Public Notice seeking comment on NAB's recommendations and proposing that AM stations who wish to implement nighttime IBOC service immediately do so under the Commission's STA procedures. We request comment here on expansion of interim IBOC procedures to allow all AM stations to implement IBOC service at night without prior authority, as NAB proposes. How else can we help facilitate improvement in the IBOC standard so that AM digital radio service can be received throughout the day and night?

44. *Interference.* In the interest of striking a balance between interference concerns and the strong interest of maximizing coverage, we adopted in the *DAB R&O,* a three-pronged approach to the issue of primary sideband power levels for AM. This approach was designed to provide a streamlined process to safeguard current reception of analog signals. First, we authorized AM stations to commence operation with the hybrid AM IBOC system tested by the NRSC, in accordance with the special temporary authorization and notification procedures specified in the *DAB R&O.* Second, when interference problems are anticipated prior to commencement of interim IBOC operations, or when actual interference occurs, we permit licensees to adjust the power level of the primary digital subcarriers downward by as much as 6 dB. Licensees are required to notify the Commission of any such power adjustments. Third, in cases in which the hybrid AM IBOC operation of one station results in complaints of actual interference within another station's protected service contour and the respective licensees are unable to reach agreement on a voluntary power reduction, we may order power reductions for the primary digital carriers or, in extreme cases, termination of interim IBOC operation. In such cases, an affected station may file an interference complaint with the Commission. This complaint must describe any test measures used to identify IBOC-related interference and fully document the extent of such interference. The Media Bureau is charged with resolving each complaint within ninety days. In the event the Bureau fails to issue a decision within ninety days of the date on which a complaint is filed, we held that the interfering station shall reduce immediately its primary digital subcarrier power level by 6 dB. We seek comment on whether this complaint process is working, and, if so, whether we should make the process permanent when final IBOC standards are adopted. Are there any related instances where the Commission may delegate authority to the Media Bureau to resolve matters in an expeditious manner?

45. *AM Stereo.* Section 73.128 of the Commission's rules sets forth the parameters for AM stereophonic broadcasting. Under this rule, an AM broadcast station may, without specific authority from the Commission, transmit stereophonic programs upon

installation of type-accepted stereophonic transmitting equipment and the necessary measuring equipment to determine that the stereophonic transmissions conform to specific modulation characteristics. The Commission's existing rules favor stations providing AM stereo. For example, stations in the expanded AM band are required to adopt stereo broadcasts for various reasons. Because the DAB system is not designed to work with AM stereo broadcasts, stations converting to digital must discontinue stereo for their analog broadcasts. We seek comment on what rule changes are necessary in this context.

46. *FM Definitions.* Section 73.310 of the Commission's rules contains the technical definitions specific to the FM service. For example, an FM broadcast channel is defined as a band of frequencies 200 kHz wide and designated by its center frequency. Channels for FM broadcast stations begin at 88.1 MHz and continue in successive steps of 200 kHz to and including 107.9 MHz. We seek comment on which definitions, including the definition of FM broadcast channel, need to be changed or modified because of the introduction of DAB.

47. *FM Operating Power.* Section 73.211 of the Commission's rules addresses power and antenna height requirements for FM stations. Generally, analog FM stations must operate with a minimum effective radiated power (''ERP'') as follows: (1) The minimum ERP for Class A stations is 0.1 kW; (2) the ERP for Class B1 stations must exceed 6 kW; (3) the ERP for Class B stations must exceed 25 kW; (4) the ERP for Class C3 stations must exceed 6 kW; (5) the ERP for Class C2 stations must exceed 25 kW; (6) the ERP for Class C1 stations must exceed 50 kW; and (7) the minimum ERP for Class C and C0 stations is 100 kW. Class C0 stations must have an antenna height above average terrain (''HAAT'') of at least 300 meters (984 feet). Class C stations must have an antenna height above average terrain of at least 451 meters (1480 feet). Stations of any class except Class A may have an ERP less than that specified in § 73.211, provided that the reference distance exceeds the distance to the class contour for the next lower class. Class A stations may have an ERP less than 100 watts provided that the reference distance equals or exceeds 6 kilometers.

48. Outside of their assigned channels, the emissions of analog FM radio signals must be attenuated below the level of the unmodulated carrier frequency: (1) By at least 25 dB at any frequency removed from the center frequency by 120 kHz up to 240 kHz; (2) by at least 35 dB at any frequency removed from the center frequency by 240 kHz up to and including 600 kHz; and (3) by at least 43 dB + 10 log (power, in watts) dB on any frequency removed by more than 600 kHz from the center frequency. This emission mask ensures that FM broadcast emissions are reasonably confined within the 200 kHz channel width. The digital component of the FM IBOC system operates 20 dB below the level of the analog carrier. When there is no analog carrier (*i.e.*, all digital operations), it is not possible to set the digital power relative to the analog power level. Rather than specifying digital as 20 dB below analog, it may be preferable to set an absolute level for digital carriers that could be calculated without reference to analog. We seek comment on the appropriate means to measure and calculate power levels. We also seek comment on the appropriate measurement instruments for this exercise. How should any new rule take into account combiner and filter loss?

49. Radio stations with antennas at high elevations operate at relatively low power. Because the IBOC signal is transmitted at a fraction of analog power (1% in the FM case), the digital signals can be extremely low power in certain cases. In some cases, these digital signals may fall below the noise floor and become unlistenable. We seek comment on how to address this matter. Specifically, should the Commission establish a minimum digital power level, even if that would exceed 20 dB below the analog signal? Commenters should submit evidence to substantiate recommended power levels.

50. *TV Channel 6.* Section 73.525 of the Commission's rules addresses interference protection for TV Channel 6. An affected TV Channel 6 station is a TV broadcast station authorized to operate on Channel 6 that is located within certain distances of a noncommercial educational FM station operating on Channels 201–220. We seek comment on what, if any, rule changes are necessary to protect TV Channel 6 from interference caused by digital radio operations. We also ask whether new rules need to be developed to protect television station licensees that have converted to digital operations and are assigned to Channel 6 under our DTV Table of Allotments.

51. *Antennas.* The initial grant of interim IBOC authority restricted stations to use of facilities similar to those evaluated by the NRSC. As a result, stations were restricted to transmission systems that combine the digital and analog signals into one antenna. When a single antenna is used for IBOC, the analog and digital FM signals may be combined after amplification (high-level combining), a method which results in substantial power losses for the digital signal. Stations with lower effective radiated power may combine the analog and digital signals before amplification (low-level combining), in which case the transmitter efficiency is reduced. Many broadcasters have expressed interest in using separate antennas for the analog and digital signals. Consequently, the NAB convened an *ad hoc* technical group to determine whether broadcasters could use this approach without causing interference to the host station's analog signal or to other FM stations. Based on the completed field tests, the NAB report proposed that the Commission permit FM stations implementing IBOC operations to use separate antennas for digital transmissions provided that certain criteria are met. On December 9, 2003, the Media Bureau released a Public Notice seeking comments on the test results, conclusions, and recommendations in the report of the NAB *ad hoc* technical committee. The Media Bureau authorized the use of a dual antenna system under certain conditions earlier this year. While this issue has previously been addressed by the staff, we seek further comment on this matter and ask what other policies we may adopt that would provide broadcasters with the flexibility to make changes in their antenna configurations. For example, should we grant delegated authority to the Media Bureau to approve certain types of antenna modifications? Should we adopt a presumptive approach to antenna modifications by which a station can make any changes as long as it clears the change with adjacent stations?

52. *Predicted Coverage.* Section 73.313 of the Commission's rules concerns FM predicted coverage. With the analog FM system, all predictions of coverage are made without regard to interference and only on the basis of estimated field strengths. We seek comment on whether this rule needs to be modified to encompass the different nature of digital audio transmissions. If so, what should the rule require?

53. *FM Booster and Translator Stations.* FM booster and FM translator stations provide important service to many mountainous and rural areas of the country, where few other radio signals are available. By their nature, the translator and booster services present unique challenges for IBOC operation. An FM translator station receives a signal from its primary FM station and

converts the signal for re-broadcasting on a different FM frequency. An FM booster station relays the primary station's programming on the same FM frequency. The implementation of IBOC should not affect the ability of translator and booster stations to continue the analog service they now provide. The record in this proceeding does not yet clearly establish, however, whether booster and translator stations will be able to relay the digital portion of IBOC signals. Tests performed by iBiquity indicate that an FM booster station will be able to relay the primary station's hybrid IBOC signal provided the booster is within 14 miles of the primary station. We received no test results or comments regarding use of IBOC by FM translator stations. Although some translator stations may be able to retransmit the digital component of an IBOC signal, we expect that many translator stations will need equipment modifications to do so. For these reasons, we solicit comment on issues relating to FM translator and booster stations. For example, should our rules facilitate the establishment of additional digital boosters to fill in areas with poor analog coverage? Will stations converting their main signal be required to simultaneously convert their boosters and/or translators?

54. Section 74.1231(b) currently restricts commercial FM translators not providing ''fill-in'' service from using alternate means of signal delivery; that is, such translators must rely on direct, over-the-air reception of the primary FM station. However, this may not be feasible for IBOC transmission. We seek comment on whether this rule should be modified for IBOC operation. How will this affect broadcast localism? If translators are allowed to use alternate delivery means, should there be some geographic or other limits to the delivery of the digital signal to the translator?

55. *Standards.* In the *DAB R&O,* we stated that the adoption of a standard will facilitate the rollout of digital audio broadcasting. We further stated that the Commission's support of a standard-setting process was designed to provide regulatory clarity and to compress the timeframe for finalizing the rules and policies that will affect the ultimate success of DAB. We solicited the assistance of a broad cross-section of interested parties in developing a formal AM and FM IBOC standard through a public and open standard-setting process. We stated that we were encouraged by the action of the NRSC to form an IBOC standards development working group, formally initiating a process designed to establish AM and FM IBOC standards. We encourage this group to provide us with significant input at this stage of the proceeding and seek comment from other parties on any such submissions.

56. *Patents.* In earlier stages of this proceeding, many parties stated that adoption of iBiquity's IBOC system would require the use of certain patented technologies. They expressed concern that the Commission's endorsement of the iBiquity system will create an opportunity for these patent holders to impose excessive licensing fees on broadcasters and listeners who have no alternative source for the technology. In response, iBiquity agreed to abide by the guidelines common to open standards, which require that licenses be available to all parties on fair terms. iBiquity also stated that it would adhere to the Commission's patent policy. The Commission stated that its decision to permit interim operations during the pendency of this proceeding provided an opportunity to assess whether iBiquity and other patent holders were entering into licensing agreements under reasonable terms and conditions that are demonstrably free of unfair discrimination. The Commission stated that it would monitor this situation and seek additional comment as warranted. We seek comment on iBiquity's conduct during the interim period. We also seek comment on whether this matter needs to be further addressed now or whether we should wait until radio station conversion has progressed to a point at which digital receivers have substantially penetrated the market.

57. *Certification.* Section 2.907 of the Commission's rules concerns the certification of electronic equipment. Certification is an equipment authorization issued by the Commission, based on representations and test data submitted by the applicant. Certification attaches to all units subsequently marketed by the grantee which are identical to the sample tested except for permissive changes or other variations authorized by the Commission. We seek comment on what, if any, rules in part 2 of our regulations must be modified to allow manufacturers to obtain certification of digital exciters and digital-compatible transmitters. How should these rule changes be coordinated with other service rule changes possible in this proceeding?

58. *Licensing.* Under § 73.1695 of the Commission's rules, the Commission considers the question of whether a proposed change or modification of a transmission standard for a broadcast station would be in the public interest. Sections 73.3571 and 73.3573 of the Commission's rules discuss the processing of AM and FM broadcast station applications, respectively. We seek comment on what, if anything, the Commission should do to amend or replace these rules in the context of DAB.

59. *Forms.* Section 73.3500 of the Commission's rules lists the applications and report forms that must be filed by an actual or potential broadcast licensee in certain circumstances. We seek comment on which forms and applications must be modified because of DAB. The following forms may be at issue: (1) Form 301—Application for Authority To Construct or Make Changes in a Commercial Broadcast Station; (2) Form 302–AM—Application for AM Broadcast Station License; (3) Form 302–FM—Application for FM Broadcast Station License; (4) Form 313—Application for Authorization in the Auxiliary Broadcast Services; (5) Form 340—Application for Authority To Construct or Make Changes in a Noncommercial Educational Broadcast Station; (6) Form 349—Application for Authority To Construct or Make Changes in an FM Translator or FM Booster Station; and (7) Form 350—Application for an FM Translator or FM Booster Station License. We seek comment on any specific changes to these forms.

60. *Noncommercial Radio.* Noncommercial radio broadcasters face unique opportunities and challenges as they move to implement DAB. The Act defines a ''noncommercial educational broadcast station'' and ''public broadcast station'' as a television or radio broadcast station that is eligible under the Commission's rules to be licensed as ''a noncommercial educational radio or television broadcast station which is owned and operated by a public agency or nonprofit private foundation, cooperation, or association'' or ''is owned and operated by a municipality and which transmits only noncommercial programs for educational purposes.'' In 1981, Congress amended the Act to give public broadcasters more flexibility to generate funds for their operations. As amended, section 399B of the Act permits public stations to provide facilities and services in exchange for remuneration as long as those uses do not interfere with the stations' provision of public telecommunications services. Section 399B, however, does not permit public broadcast stations to make their facilities ''available to any person for the broadcasting of any advertisement.'' In addition, under § 73.621 of the Commission's rules, public television

stations are required to furnish primarily an educational as well as a nonprofit and noncommercial broadcast service.

61. In 2001, the Commission concluded that noncommercial educational television licensees (''NCEs'') must use their entire digital television capacity primarily for nonprofit, noncommercial, educational broadcast services. In addition, the Commission held that the statutory prohibition against broadcasting of advertising on NCE television stations applies only to broadcast programming streams provided by NCE licensees, but does not apply to any ancillary or supplementary services presented on their excess DTV channels that do not constitute broadcasting. Like commercial DTV stations, NCE licensees must pay a fee of five percent of gross revenues generated by ancillary or supplementary services provided on their DTV service. In *Office of Communication, Inc. of United Church of Christ* v. *F.C.C.* (*''UCC''*), the U.S. Court of Appeals for the District of Columbia Circuit upheld our *DTV NCE A&S Order,* 67 FR 3622–01 (Jan. 25, 2002).

62. We seek comment on what, if any, special rules or considerations should apply to noncommercial radio stations in light of our DTV NCE A&S policy and the DC Circuit's *UCC* decision. Should we adopt the same approach for noncommercial radio stations as we adopted for NCE television licensees? Are there any differences between DTV and DAB that require special consideration in deciding this issue? Specifically, we ask whether a noncommercial radio station should be able to use excess digital audio spectrum capacity to generate revenue through the provision of supplementary services, such as fee-based services. Are there other ways of allowing a noncommercial radio station to exercise greater flexibility with its digital capacity? We also seek comment on how we can ensure noncommercial radio stations remain noncommercial in nature as the radio industry converts to DAB.

63. *Low Power FM.* In 2000, the Commission authorized the licensing of two new classes of FM radio stations, one operating at a maximum power of 100 watts and one operating at a maximum power of 10 watts. Both types of stations, known as low power FM stations (''LPFM''), were authorized in a manner that protects existing FM service. A 100 watt LPFM station can serve an area with a radius of approximately 3.5 miles. The Commission stated that LPFM stations would be operated on a noncommercial educational basis by entities that do not hold an attributable interest in any other broadcast station or other media subject to our ownership rules. The Commission established the new LPFM service to create new broadcasting opportunities for locally-based organizations to serve their communities.

64. In December 2000, Congress passed the Government of the District of Columbia Appropriations Act, FY 2001 (''DCAA''). That legislation required the Commission to prescribe third-adjacent channel spacing requirements for LPFM stations, and invalidate any existing licenses that did not comply with the new separation criteria. Congress instructed the Commission to conduct an experimental program to test whether LPFM stations would interfere with existing FM stations, if LPFM stations were not subject to third-adjacent channel spacing requirements. Congress also instructed that such tests determine whether LPFM will interfere with full power stations' digital audio broadcasting efforts. The DCAA directed the Commission to select an independent entity to conduct field tests and to ''publish the results of the experimental program and field tests and afford an opportunity for the public to comment on such results.'' The Commission selected the MITRE Corporation as the independent entity that would conduct the testing. On June 30, 2003, MITRE submitted its Final Report (''LPFM Report'') to the Commission. The Report describes the field measurement data collected and analyzes it with regard to the levels of harmful interference experienced. The LPFM Report also contains theoretical analysis, conclusions, and recommendations to the Commission. Pertinent to the discussion here, the Report found that LPFM will not interfere with DAB service provided by full power radio stations. On July 11, 2003, the Media Bureau issued a Public Notice seeking comment on the LPFM Report. On February 19, 2004, a Report to Congress on the LPFM interference testing program was issued in accordance with the DCAA. That Report reiterated the finding that third-adjacent channel LPFM stations will have little or no effect on terrestrial digital radio since third-adjacent channel LPFM interference to digital receivers is unlikely to occur beyond 130 meters from the LPFM transmitter. We do not seek further comment on the LPFM Report in this proceeding. Instead, we seek comment on the conversion of LPFM stations to digital operation, and the potential impact of such a conversion on other stations.

65. *Ex Parte Rules.* This proceeding will be treated as a ''permit-but-disclose'' proceeding subject to the ''permit-but-disclose'' requirements under § 1.1206(b) of the Commission's rules. *Ex parte* presentations are permissible if disclosed in accordance with Commission rules, except during the Sunshine Agenda period when presentations, *ex parte* or otherwise, are generally prohibited. Persons making oral *ex parte* presentations are reminded that a memorandum summarizing a presentation must contain a summary of the substance of the presentation and not merely a listing of the subjects discussed. More than a one-or two-sentence description of the views and arguments presented is generally required. Additional rules pertaining to oral and written presentations are set forth in § 1.1206(b).

66. *Comments and Reply Comments.* Pursuant to §§ 1.415 and 1.419 of the Commission's rules, 47 CFR 1.415, 1.419, interested parties must file comments on or before June 16, 2004 and reply comments on or before July 16, 2004. Comments may be filed using the Commission's Electronic Comment Filing System (''ECFS'') or by filing paper copies. *See Electronic Filing of Documents in Rulemaking Proceedings*, 63 FR 24121 (1998). Accessible formats (computer diskettes, large print, audio recording, and Braille) are available to persons with disabilities by contacting Brian Millin, of the Consumer & Governmental Affairs Bureau, at (202) 418–7426, TTY (202) 418–7365, or at *brian.millin@fcc.gov.*

67. Comments filed through the ECFS can be sent as an electronic file via the Internet to *http://www.fcc.gov/e-file/ecfs.html.* Generally, only one copy of an electronic submission must be filed. In completing the transmittal screen, commenters should include their full name, U.S. Postal Service mailing address, and the applicable docket or rulemaking number. Parties may also submit an electronic comment by Internet e-mail. To get filing instructions for e-mail comments, commenters should send an e-mail to *ecfs@fcc.gov*, and should include the following words in the body of the message, ''get form <your e-mail address>.'' A sample form and directions will be sent in reply.

68. Parties who choose to file by paper must file an original and four copies of each filing. Filings can be sent by hand or messenger delivery, by commercial overnight courier, or by first-class or overnight U.S. Postal Service (although we continue to experience delays in receiving U.S.

Postal Service mail). The Commission's contractor, Natek, Inc., will receive hand-delivered or messenger-delivered paper filings for the Commission's Secretary at 236 Massachusetts Avenue, NE., Suite 110, Washington, DC 20002. The filing hours at this location are 8 a.m. to 7 p.m. All hand deliveries must be held together with rubber bands or fasteners. Any envelopes must be disposed of before entering the building. Commercial overnight mail (other than U.S. Postal Service Express Mail and Priority Mail) must be sent to 9300 East Hampton Drive, Capitol Heights, MD 20743. U.S. Postal Service first-class mail, Express Mail, and Priority Mail, should be addressed to 445 12th Street, SW., Washington, DC 20554. All filings must be addressed to the Commission's Secretary, Office of the Secretary, Federal Communications Commission. For additional information on this proceeding, contact Ben Golant, *ben.golant@fcc.gov*, of the Media Bureau, Policy Division, (202) 418–7111.

69. The Regulatory Flexibility Act of 1980, as amended (''RFA''), requires that a regulatory flexibility analysis be prepared for notice and comment rule making proceedings, unless the agency certifies that ''the rule will not, if promulgated, have a significant economic impact on a substantial number of small entities.'' The RFA generally defines the term ''small entity'' as having the same meaning as the terms ''small business,'' ''small organization,'' and ''small governmental jurisdiction.'' In addition, the term ''small business'' has the same meaning as the term ''small business concern'' under the Small Business Act. A ''small business concern'' is one which: (1) Is independently owned and operated; (2) is not dominant in its field of operation; and (3) satisfies any additional criteria established by the Small Business Administration (SBA).

70. As required by the RFA, an Initial Regulatory Flexibility Analysis (''IRFA'') was incorporated in the *NPRM* in MM Docket No. 99–325. The Commission sought written public comments on the proposals in the *NPRM* including comments on the IRFA. The Office of Advocacy, U.S. Small Business Administration (SBA) filed comments asserting that the Commission, in the IRFA, failed to adequately consider the potential impact of DAB on small businesses and did not discuss alternatives designed to minimize regulatory burdens on small entities. In the *DAB R&O*, the Commission promised to issue a *FNPRM* proposing final rules for digital audio broadcasting and stated it would consider the impact of any final rules on small entities in connection with that further proceeding. By the issuance of this *FNPRM*, we seek comment on the impact our suggested proposals would have on small business entities.

71. The Commission will send a copy of the *FNPRM*, including a copy of the Initial Regulatory Flexibility Act analysis, in a Report to Congress pursuant to the Congressional Review Act. In addition, a copy of the *FNPRM* will be sent to the Chief Counsel for Advocacy of the SBA, and will be published in the **Federal Register**.

72. This document is available in alternative formats (computer diskette, large print, audio record, and Braille). Persons with disabilities who need documents in these formats may contact Brian Millin at (202) 418–7426 (voice), (202) 418–7365 (TTY), or via e-mail at *bmillin@fcc.gov.*

73. This *FNPRM* may lead to a Report and Order that would contain information collection(s) subject to the Paperwork Reduction Act of 1995 (''PRA''), Public Law 104–13. This *FNPRM* will be submitted to the Office of Management and Budget (''OMB'') for review under the PRA. OMB, the general public and other Federal agencies are invited to comment on the possible information collections, such as FCC form revisions, contained in this proceeding. Comments should address: (a) Whether the proposed collection of information is necessary for the proper performance of the functions of the Commission, including whether the information shall have practical utility; (b) the accuracy of the Commission's burden estimates; (c) ways to enhance the quality, utility, and clarity of the information collected; and (d) ways to minimize the burden of the collection of information on the respondents, including the use of automated collection techniques or other forms of information technology.

74. Written comments on possible new and modified information collections must be submitted on or before 60 days after date of publication the **Federal Register**. In addition to filing comments with the Secretary, a copy of any Paperwork Reduction Act comments on the information collection(s) contained herein should be submitted to Leslie Smith, Federal Communications Commission, Room 1–A804, 445 12th Street, SW., Washington, DC 20554, or via the Internet to Leslie *Smith@fcc.gov*, and to Kristy L. LaLonde, OMB Desk Officer, Room 10234 NEOB, 725 17th Street, NW., Washington, DC 20503 via the Internet to *KristyL.LaLonde@omb.eop.gov* or by fax to 202–395–5167. For additional information concerning the information collection(s) contained in this document, contact Leslie Smith at 202–418–0217, or via the Internet at *Leslie.Smith@fcc.gov.*

Initial Regulatory Flexibility Analysis

75. As required by the Regulatory Flexibility Act of 1980, as amended, the Commission has prepared this Initial Regulatory Flexibility Analysis of the possible significant economic impact on a substantial number of small entities by the policies and rules proposed in the *FNPRM.* Written public comments are requested on this IRFA. Comments must be identified as responses to the IRFA and must be filed by the deadlines for comments on the *FNPRM* provided above. The Commission will send a copy of this entire *FNPRM*, including this IRFA, to the Chief Counsel for Advocacy of the Small Business Administration (''SBA''). In addition, the *FNPRM* and the IRFA (or summaries thereof) will be published in the **Federal Register**.

76. *Need For, and Objectives of, the Proposed Rules.* This rulemaking proceeding is initiated to obtain comments concerning the Commission's proposals to foster the development and implementation of terrestrial digital audio broadcasting. In the *FNPRM* the Commission (1) reaffirms its commitment to providing radio broadcasters with the opportunity to take advantage of DAB technology; (2) identifies Commission public policy objectives resulting from the introduction of DAB service, such as more diverse programming serving local and community needs; (3) explores avenues for encouraging the adoption of DAB by providing radio stations with the ability to offer datacasting and subscription services; and (4) proposes technical service rules for DAB, such as the authority to commence AM nighttime service and permitting efficient equipment authorization.

77. *Legal Basis.* The authority for this proposed rulemaking is contained in Sections 1, 2, 4(i), 303, 307, 312(a)(7), 315, 317, 507, and 508 of the Communications Act of 1934, 47 U.S.C. 151, 152, 154(i), 303, 307, 312(a)(7), 315, 317, 508, and 509.

78. *Description and Estimate of the Number of Small Entities to Which the Proposed Rules Will Apply.* The RFA directs the Commission to provide a description of and, where feasible, an estimate of the number of small entities that will be affected by the proposed rules. The RFA generally defines the term ''small entity'' as encompassing the terms ''small business,'' ''small

organization,'' and ''small governmental entity.'' In addition, the term ''small business'' has the same meaning as the term ''small business concern'' under the Small Business Act. A small business concern is one which: (1) Is independently owned and operated; (2) is not dominant in its field of operation; and (3) satisfies any additional criteria established by the Small Business Administration (''SBA'').

79. *Radio Stations.* The proposed rules and policies potentially will apply to all AM and FM radio broadcasting licensees and potential licensees. The SBA defines a radio broadcasting station that has no more than $6 million in annual receipts as a small business. A radio broadcasting station is an establishment primarily engaged in broadcasting aural programs by radio to the public. Included in this industry are commercial, religious, educational, and other radio stations. Radio broadcasting stations which primarily are engaged in radio broadcasting and which produce radio program materials are similarly included. However, radio stations which are separate establishments and are primarily engaged in producing radio program material are classified under another SIC number. As of December 31, 2003, official Commission records indicate that 11,011 commercial radio stations were operating, of which 4,794 were AM stations. Thus, the proposed rules will affect over 11,000 radio stations.

80. *Electronics Equipment Manufacturers.* Rules adopted in this proceeding could apply to manufacturers of DAB receiving equipment and other types of consumer electronics equipment. The SBA has developed definitions of small entity for manufacturers of audio and video equipment as well as radio and television broadcasting and wireless communications equipment. The former category includes companies employing 750 or fewer employees, the latter category includes companies employing 1000 or fewer employees. The Commission has not developed a definition of small entities applicable to manufacturers of electronic equipment used by consumers, as compared to industrial use by television licensees and related businesses. Therefore, we will use the SBA definitions applicable to manufacturers of audio and visual equipment and radio and television broadcasting and wireless communications equipment, since these are the two closest NAICS Codes applicable to the consumer electronics equipment manufacturing industry. However, these NAICS categories are broad and specific figures are not available as to how many of these establishments manufacture consumer equipment. According to the SBA's regulations, an audio and visual equipment manufacturer must have 750 or fewer employees in order to qualify as a small business concern. Census Bureau data indicates that there are 554 U.S. establishments that manufacture audio and visual equipment, and that 542 of these establishments have fewer than 500 employees and would be classified as small entities. The remaining 12 establishments have 500 or more employees; however, we are unable to determine how many of those have fewer than 750 employees and therefore, also qualify as small entities under the SBA definition. Under the SBA's regulations, a radio and television broadcasting and wireless communications equipment manufacturer must also have 750 or fewer employees in order to qualify as a small business concern. Census Bureau data indicates that there 1,215 U.S. establishments that manufacture radio and television broadcasting and wireless communications equipment, and that 1,150 of these establishments have fewer than 500 employees and would be classified as small entities. The remaining 65 establishments have 500 or more employees; however, we are unable to determine how many of those have fewer than 750 employees and therefore, also qualify as small entities under the SBA definition. We therefore conclude that there are no more than 542 small manufacturers of audio and visual electronics equipment and no more than 1,150 small manufacturers of radio and television broadcasting and wireless communications equipment for consumer/household use.

81. *Description of Projected Reporting, Recordkeeping and Other Compliance Requirements.* The proposed rules may impose additional reporting or recordkeeping requirements on existing radio stations, depending upon how the Commission chooses to update its forms in response to comments filed in this proceeding. We seek comment on the possible burden these requirements would place on small entities. Also, we seek comment on whether a special approach toward any possible compliance burdens on small entities might be appropriate.

82. *Steps Taken To Minimize Significant Impact on Small Entities, and Significant Alternatives Considered.* The RFA requires an agency to describe any significant alternatives that it has considered in reaching its proposed approach, which may include the following four alternatives (among others): (1) The establishment of differing compliance or reporting requirements or timetables that take into account the resources available to small entities; (2) the clarification, consolidation, or simplification of compliance or reporting requirements under the rule for small entities; (3) the use of performance, rather than design, standards; and (4) an exemption from coverage of the rule, or any part thereof, for small entities.

83. In the *First R&O* in this proceeding, the Commission considered alternative standards for digital audio broadcasting. The Commission, after careful study and consideration, chose iBiquity's in-band on-channel technology over the competing Eureka 147 standard. In this *FNPRM*, the Commission seeks comment on what rules changes are in the public interest to reflect the advent of digital audio broadcasting using iBiquity's standard. The Commission proposes a flexible use policy for DAB, allowing radio stations to transmit high quality digital audio, multiplexed digital audio streams, and datacasting. At the same time, the Commission proposes to apply existing public interest requirements and operational rules to DAB. The Commission seeks comment on how to apply such requirements, understanding the burdens such regulation may impose on small as well as large entities affected by the rules we will adopt. In addition, rather than require all radio stations to convert to a digital format by a date certain, the Commission proposes to allow marketplace forces to dictate the conversion process.

84. *Federal Rules Which Duplicate, Overlap, or Conflict With, the Commission's Proposals.* None.

List of Subjects

47 CFR Part 2

Communications equipment.

47 CFR Part 73

Political candidates, Radio.

47 CFR Part 74

Communications equipment, Radio.

Federal Communications Commission.

Marlene H. Dortch,

Secretary.

[FR Doc. 04–11118 Filed 5–14–04; 8:45 am]

BILLING CODE 6712–01–P

DEPARTMENT OF THE INTERIOR

Fish and Wildlife Service

50 CFR Part 17

RIN 1018–AT42

Endangered and Threatened Wildlife and Plants; Proposed Designation of Critical Habitat for the Arroyo Toad (*Bufo californicus*); Correction

AGENCY: Fish and Wildlife Service, Interior.

ACTION: Proposed rule; correction.

SUMMARY: This document corrects the preamble to a proposed rule published in the **Federal Register** of April 28, 2004, regarding the proposed designation of critical habitat for the arroyo toad (*Bufo californicus*). The correction is that written requests for public hearings must be received by June 13, 2004.

FOR FURTHER INFORMATION CONTACT: Diane Noda, Field Supervisor, Ventura Fish and Wildlife Office, 2493 Portola Road, Suite B, Ventura, CA 93003 (telephone 805/644–1766; facsimile 805/644–3958).

Correction

In proposed rule FR Doc. 04–9204, beginning on page 23254 in the issue of April 28, 2004, make the following correction, in the **DATES** section. On page 23254 in the first column, replace the second sentence in the **DATES** section with the following sentence: ''We must receive requests for public hearings, in writing, at the address shown in the **ADDRESSES** section by June 13, 2004.''

Dated: May 10, 2004.

Paul Hoffman,

Acting Assistant Secretary for Fish and Wildlife and Parks.

[FR Doc. 04–11049 Filed 5–14–04; 8:45 am]

BILLING CODE 4310–55–P

Notices

Federal Register

Vol. 69, No. 95

Monday, May 17, 2004

This section of the FEDERAL REGISTER contains documents other than rules or proposed rules that are applicable to the public. Notices of hearings and investigations, committee meetings, agency decisions and rulings, delegations of authority, filing of petitions and applications and agency statements of organization and functions are examples of documents appearing in this section.

DEPARTMENT OF AGRICULTURE

Rural Development

Notice of Funds Availability (NOFA) Inviting Applications for the Renewable Energy Systems and Energy Efficiency Improvements Grant Program

AGENCY: Rural Development, USDA.

ACTION: Notice; correction.

SUMMARY: Rural Development corrects a notice published in the **Federal Register** May 5, 2004 (69 FR 25234–25259), announcing the availability of up to $22.8 million in competitive grant funds for fiscal year (FY) 2004 to purchase renewable energy systems and make energy improvements for agricultural producers and rural small businesses.

Accordingly the notice published May 5, 2004 (69 FR 25234–25259), is corrected as follows:

On page 25236 in the second column under the heading Grant Amounts, the sixth sentence, ''Applications for energy efficiency improvements must be for a minimum grant request of $2,500, but not more than $500,000'' should read ''Applications for energy efficiency improvements must be for a minimum grant request of $2,500, but not more than $250,000.''

Dated: May 7, 2004.

John Rosso,

Administrator, Rural Business-Cooperative Service.

[FR Doc. 04–11110 Filed 5–14–04; 8:45 am]

BILLING CODE 3410–XY–P

DEPARTMENT OF AGRICULTURE

Forest Service

Glenn/Colusa County Resource Advisory Committee

AGENCY: Forest Service, USDA.

ACTION: Notice of meeting.

SUMMARY: The Glenn/Colosa County Resource Advisory Committee (RAC) will meet in Willows, California. Agenda items to be covered include: (1) Introductions, (2) Aproval of Minutes, (3) Public Comment, (4) Project Proposal/Possible Action, (5) Report from Monitoring Sub-Committee, (6) Re-Applications for RAC Membership, (7) Report from Commander Trip, (8) General Discussion, (9) Next Agenda.

DATES: The meeting will be held on May 24, 2004, from 1:30 p.m. and end at approximately 4:30 p.m.

ADDRESSES: The meeting will be held at the Mendocino National Forest Supervisor's Office, 825 N. Humboldt Ave., Willows, CA 95988. Individuals wishing to speak or propose agenda items must send their names and proposals to Jim Giachino, DFO, 825 N. Humboldt Ave., Willows, CA 95988.

FOR FURTHER INFORMATION CONTACT: Bobbin Gaddini, Committee Coordinator, USDA, Mendocino National Forest, Grindstone Ranger District, PO Box 164, Elk Creek, CA 95939, (530) 968–5329; E-mail *ggaddini@fs.fed.us.*

SUPPLEMENTARY INFORMATION: The meeting is open to the public. Committee discussion is limited to Forest Service staff and Committee members. However, persons who wish to bring matters to the attention of the Committee may file written statements with the Committee staff before or after the meeting. Public input sessions will be provided and individuals who made written requests by May 20, 2004 will have the opportunity to address the committee at those sessions.

Dated: May 11, 2004.

James F. Giachino,

Designated Federal Official.

[FR Doc. 04–11061 Filed 5–14–04; 8:45 am]

BILLING CODE 3410–11–M

DEPARTMENT OF AGRICULTURE

Forest Service

Northeast Oregon Forests Resource Advisory Committee (MAC)

AGENCY: Forest Service, USDA.

ACTION: Notice of meetings.

SUMMARY: Pursuant to the authorities in the Federal Advisory Committees Act (Pub. L. 92–463), the Northeast Oregon Forests Resource Advisory Committee (RAC) will meet on June 3–4, 2004 in Hines, Oregon. The purpose of the meeting is to discuss the selection of Title II projects under Public Law 106–393, H.R. 2389, the Secure Rural Schools and Community Self-Determination Act of 2000, also called the ''Payment to States'' Act and tour Title II project sites on the Malheur National Forest.

DATES: The meeting will be held on June 3, 2004 from 9 a.m. to 5 p.m. and June 4, 2004 from 8 a.m. until 3 p.m.

ADDRESSES: The June 3, 2004 meeting will be held a the Comfort Inn Motel conference room, located at N. HWY 20, Hines, Oregon. the June 4, 2004 Title II project tour will start at Comfort Inn, located at N. HWY 20, Hines, Oregon and proceed through the Malheur National Forest.

FOR FURTHER INFORMATION CONTACT: Jennifer Harris, Designated Federal Official, USDA, Malheur National Forest, P.O. Box 909, John Day, Oregon 97845. Phone: (541) 575–3000.

SUPPLEMENTARY INFORMATION: At the June 3 meeting the RAC will review and recommend FY 2005 Title II project proposals, discuss replacement RAC members and re-chartering of the RAC and receive an update of how previous fiscal year projects are progressing. A public comment period will be provided at 11:15 a.m. and individuals will have the opportunity to address the committee at that time. On June 4 the committee will tour the Malheur National Forest and review completed Title II projects.

Dated: May 11, 2004.

Jennifer L. Harris,

Designated Federal Official.

[FR Doc. 04–11076 Filed 5–14–04; 8:45 am]

BILLING CODE 3410–DK–P

DEPARTMENT OF AGRICULTURE

Forest Service

Lake County Resource Advisory Committee

AGENCY: Forest Service, USDA.

ACTION: Notice of meeting.

SUMMARY: The Lake County Resource Advisory Committee (RAC) will hold a meeting.

DATES: The meeting will be held on June 24, 2004, from 3:30 p.m. to 6 p.m.

ADDRESSES: The meeting will be held at the Lake County Board of Supervisors's Chambers at 255 North Forbes Street, Lakeport.

FOR FURTHER INFORMATION CONTACT: Debbie McIntosh, Committee Coordinator, USDA, Mendocino National Forest, Upper Lake Ranger District, 10025 Elk Mountain Road, Upper Lake, CA 95485. (707) 275–2361; e-mail *dmcintosh@fs.fed.us.*

SUPPLEMENTARY INFORMATION: Agenda items to be covered include: (1) Roll call/establish quorum; (2) review and approval of the minutes of the April 29, 2004, meeting; (3) discuss other business for 2004; (4) discuss appointments to RAC for second terms; (5) review new projects for 2005; (6) recommend projects for 2054; (7) discuss project cost accounting USFS/County of Lake; (8) set next meeting date and; (9) public comment period. The meeting is open to the public. Public input opportunity will be provided and individuals will have the opportunity to address the Committee at that time.

Dated: May 10, 2004.

Blaine P. Baker,

Designated Federal Officer.

[FR Doc. 04–11120 Filed 5–14–04; 8:45 am]

BILLING CODE 3410–11–M

DEPARTMENT OF COMMERCE

[I.D. 051104B]

Submission for OMB Review; Comment Request

The Department of Commerce has submitted to the Office of Management and Budget (OMB) for clearance the following proposal for collection of information under the provisions of the Paperwork Reduction Act (44 U.S.C. Chapter 35).

Agency: National Oceanic and Atmospheric Administration (NOAA).

Title: Commercial Operator's Annual Report (COAR).

Form Number(s): None.

OMB Approval Number: 0648–0428

Type of Request: Regular submission.

Burden Hours: 696.

Number of Respondents: 87.

Average Hour Per Response: 8.

Needs and Uses: The recordkeeping and reporting requirements for participants in the groundfish fisheries of the Exclusive Economic Zone off Alaska (Bering Sea and Aleutian Islands, Gulf of Alaska) require owners of catcher/processor vessels, at-sea processors, and motherships to complete the State of Alaska, Department of Fish and Game Commercial Operator's Annual Report (COAR). The COAR provides information on ex-vessel and first wholesale values for statewide fish and shellfish products, information used to analyze and measure the impact of proposed or enacted management measures.

Affected Public: Business or other for-profit organizations, and individuals or households.

Frequency: Annually.

Respondent's Obligation: Mandatory.

OMB Desk Officer: David Rostker, (202) 395–3897.

Copies of the above information collection proposal can be obtained by calling or writing Diana Hynek, Departmental Paperwork Clearance Officer, (202) 482–0266, Department of Commerce, Room 6625, 14th and Constitution Avenue, NW, Washington, DC 20230 (or via the Internet at *dHynek@doc.gov*).

Written comments and recommendations for the proposed information collection should be sent within 30 days of publication of this notice to David Rostker, OMB Desk Officer, fax number 202–395–7285, or *David__Rostker@omb.eop.gov*.

Dated: May 10, 2004.

Gwellnar Banks,

Management Analyst, Office of the Chief Information Officer.

[FR Doc. 04–11157 Filed 5–14–04; 8:45 am]

BILLING CODE 3510–22–S

DEPARTMENT OF COMMERCE

[I.D. 051104C]

Submission for OMB Review; Comment Request

The Department of Commerce has submitted to the Office of Management and Budget (OMB) for clearance the following proposal for collection of information under the provisions of the Paperwork Reduction Act (44 U.S.C. Chapter 35).

Agency: National Oceanic and Atmospheric Administration (NOAA).

Title: Antarctic Living Marine Resources Conservation and Management Measures.

Form Number(s): None.

OMB Approval Number: 0648–0194.

Type of Request: Regular submission.

Burden Hours: 563.

Number of Respondents: 87.

Average Hours Per Response: 15 minutes for a dealer permit application or a reexport permit application; 3 minutes for a dealer catch document; 15 minutes for a dealer reexport catch documentation; 15 minutes for a harvesting vessel catch document; 15 minutes for a pre-approval application for toothfish imports; 15 minutes for an import ticket; 0.33 seconds for an automatic position report from a Vessel Monitoring System (VMS); 4 hours to install a VMS; 2 hours for annual maintenance of a VMS; 28 hours for an application for a new or exploratory fishery; 1 hour for an application to harvest/transship; 2 minutes for a radioed position report; 1 hour for an application for a CCAMLR Ecosystem Monitoring Program permit; and 1 hour for a CCAMLR Ecosystem Monitoring Program site activity report.

Needs and Uses: This collection of information concerns the harvesting and importation of Antarctic Marine Living Resources from waters regulated by the Commission for the Conservation of Antarctic Marine Living Resources (CCAMLR). The reporting requirements included in this collection relate to CCAMLR Ecosystem Monitoring Program (CEMP) activities, U.S. harvesting permit applications and/or harvesting vessel operators, as well as importers and re-exporters Antarctic Marine Living Resources. The collection is necessary in order for the United States to meet its treaty obligations as a contracting party to the Convention for the Conservation of Antarctic Marine Living Resources.

Affected Public: Business or other for-profit organizations, and individuals or households.

Frequency: On occasion; annually; 6 times daily.

Respondent's Obligation: Mandatory.

OMB Desk Officer: David Rostker, (202) 395–3897.

Copies of the above information collection proposal can be obtained by calling or writing Diana Hynek, Departmental Paperwork Clearance Officer, (202) 482–0266, Department of Commerce, Room 6625, 14th and Constitution Avenue, NW, Washington, DC 20230 (or via the Internet at *dHynek@doc.gov*).

Written comments and recommendations for the proposed information collection should be sent within 30 days of publication of this notice to David Rostker, OMB Desk Officer, fax number 202–395–7285, or *David__Rostker@omb.eop.gov*.

Dated: May 11, 2004.

Gwellnar Banks,

Management Analyst, Office of the Chief Information Officer.

[FR Doc. 04–11158 Filed 5–14–04; 8:45 am]

BILLING CODE 3510–22–S

DEPARTMENT OF COMMERCE

[I.D. 051104D]

Submission for OMB Review; Comment Request

The Department of Commerce has submitted to the Office of Management and Budget (OMB) for clearance the following proposal for collection of information under the provisions of the Paperwork Reduction Act (44 U.S.C. Chapter 35).

Agency: National Oceanic and Atmospheric Administration (NOAA).

Title: Management and Oversight of the National Estuarine Research Reserve System.

Form Number(s): None.

OMB Approval Number: 0648–0121.

Type of Request: Regular submission.

Burden Hours: 14,105.

Number of Respondents: 28.

Average Hours Per Response: 522.

Needs and Uses: The National Estuarine Research Reserve System consists of carefully-selected estuarine areas of the U.S. that are designated, preserved, and managed for research and educational purposes. The information is needed from states to review proposed designations. Sites selected must develop management plans. The grantees must submit annual work plans/reports.

Affected Public: State, Local or Tribal Government, and not-for-profit institutions.

Frequency: Annually, on occasion.

Respondent's Obligation: Required to obtain or retain benefits.

OMB Desk Officer: David Rostker, (202) 395–3897.

Copies of the above information collection proposal can be obtained by calling or writing Diana Hynek, Departmental Paperwork Clearance Officer, (202) 482–0266, Department of Commerce, Room 6625, 14th and Constitution Avenue, NW, Washington, DC 20230 (or via the Internet at *dHynek@doc.gov*).

Written comments and recommendations for the proposed information collection should be sent within 30 days of publication of this notice to David Rostker, OMB Desk Officer, FAX number 202–395–7285, or *David__Rostker@omb.eop.gov*.

Dated: May 11, 2004.

Gwellnar Banks,

Management Analyst, Office of the Chief Information Officer.

[FR Doc. 04–11159 Filed 5–14–04; 8:45 am]

BILLING CODE 3510–22–S

DEPARTMENT OF COMMERCE

International Trade Administration

(A–412–822)

Stainless Steel Bar from the United Kingdom: Notice of Rescission of Antidumping Duty Administrative Review

AGENCY: Import Administration, International Trade Administration, Department of Commerce.

ACTION: Notice of Rescission of Antidumping Duty Administrative Review.

EFFECTIVE DATE: May 17, 2004.

FOR FURTHER INFORMATION CONTACT: Kate Johnson or Rebecca Trainor, Import Administration, International Trade Administration, U.S. Department of Commerce, 14th Street and Constitution Avenue, N.W., Washington, D.C. 20230; telephone: (202) 482–4929 or (202) 482–4007, respectively.

SUPPLEMENTARY INFORMATION:

Background

On March 1, 2004, the Department published in the **Federal Register** (69 FR 9584) a notice of ''Opportunity To Request Administrative Review'' of the antidumping duty order on stainless steel bar from the United Kingdom for the period March 1, 2003, through February 29, 2004. On March 31, 2004, Corus Engineering Steels Limited (CES) requested an administrative review of its sales for this period. On April 28, 2004, the Department published a notice of initiation of an administrative review of the antidumping duty order on stainless steel bar from the United Kingdom with respect to this company. *See Initiation of Antidumping and Countervailing Duty Administrative Reviews*, 69 FR 23170.

Rescission of Review

On May 6, 2004, CES timely withdrew its request for an administrative review of its sales during the above–referenced period. Section 351.213(d)(1) of the Department's regulations stipulates that the Secretary will rescind an administrative review if the party that requests a review withdraws the request within 90 days of the date of publication of notice of initiation of the requested review. In this case, CES has withdrawn its request for review within the 90–day period. CES was the sole party to request the initiation of the review; therefore, we are rescinding this review of the antidumping duty order on stainless steel bar from the United Kingdom.

This notice is published in accordance with section 751 of the Tariff Act of 1930, as amended, and 19 CFR 351.213(d)(4).

Dated: May 11, 2004.

Jeffrey May,

Deputy Assistant Secretary for Import Administration.

[FR Doc. 04–11119 Filed 5–14–04; 8:45 am]

BILLING CODE 3510–DS–S

DEPARTMENT OF COMMERCE

National Oceanic and Atmospheric Administration

Evaluation of Coastal Zone Management Programs and National Estuarine Research Reserves

AGENCY: Office of Ocean and Coastal Resource Management, National Ocean Service, National Oceanic and Atmospheric Administration (NOAA), DOC.

ACTION: Notice of intent to evaluate—rescheduled site visit and public meeting.

SUMMARY: The NOAA Office of Ocean and Coastal Resource Management (OCRM) announces its intent to evaluate the performance of the South Slough National Estuarine Research Reserve, Oregon, at a rescheduled time.

The South Slough National Estuarine Research Reserve, Oregon, evaluation site visit will be held June 21–25, 2004. One public meeting will be held during the week. The public meeting will be on Thursday, June 24, 2004, at 6:30 p.m., in the large conference room at the North Bend Library, 1800 Sherman Avenue, North Bend, Oregon. This site visit replaces a site visit originally scheduled for June 14–18, 2004. Likewise, the public meeting scheduled above replaces a public meeting originally set for Thursday, June 17, 2004.

Notice of the earlier site visit and public meeting was published in the **Federal Register**, March 23, 2004.

FOR FURTHER INFORMATION CONTACT: Ralph Cantral, Chief, National Policy and Evaluation Division, Office of Ocean and Coastal Resource Management, NOS/NOAA, 1305 East-West Highway, N/ORM7, Silver Spring, Maryland 20910, (301) 713–3155, Extension 118.

Federal Domestic Assistance Catalog 11.419, Coastal Zone Management Program Administration.

Dated: May 10, 2004.

Jamison S. Hawkins,

Deputy Assistant Administrator, Ocean Services and Coastal Zone Management.

[FR Doc. 04–11043 Filed 5–14–04; 8:45 am]

BILLING CODE 3510–08–P

DEPARTMENT OF COMMERCE

National Oceanic and Atmospheric Administration

[I.D. 051104A]

Magnuson-Stevens Act Provisions; General Provisions for Domestic Fisheries; Application for Exempted Fishing Permits (EFPs)

AGENCY: National Marine Fisheries Service (NMFS), National Oceanic and Atmospheric Administration (NOAA), Commerce.

ACTION: Notification of a proposal for an EFP to conduct experimental fishing; request for comments.

SUMMARY: The Administrator, Northeast Region, NMFS (Regional Administrator) has made a preliminary determination that the subject EFP application contains all the required information and warrants further consideration. The Regional Administrator has also made a preliminary determination that the activities authorized under the EFP would be consistent with the goals and objectives of the Northeast (NE) Multispecies Fishery Management Plan (FMP). However, further review and consultation may be necessary before a final determination is made to issue the EFP. Therefore, NMFS announces that the Regional Administrator proposes to issue an EFP that would allow three vessels to conduct fishing operations that are otherwise restricted by the regulations governing the fisheries of the Northeastern United States. The EFP would allow for exemptions from the NE multispecies mesh requirements specified at 50 CFR 648.80(a)(3)(i), the multispecies rolling closure areas restrictions specified at 648.81(f), and the multispecies Days-At-Sea (DAS) requirements specified at 648.82(a). The experiment proposes to conduct a study of an experimental bycatch reduction device in order to develop otter trawl gear for the NE multispecies fishery that would result in reduced catch of Atlantic cod. The EFP would allow these exemptions for three commercial vessels for not more than 12 total days of sea trials. All experimental work would be monitored by Manomet Center for Conservation Sciences personnel.

Regulations under the Magnuson-Stevens Fishery Conservation and Management Act require publication of this notification to provide interested parties the opportunity to comment on applications for proposed EFPs.

DATES: Comments on this document must be received on or before June 1, 2004.

ADDRESSES: Comments on this notice may be submitted by e-mail. The mailbox address for providing e-mail comments is *DA499@noaa.gov*. Include in the subject line of the e-mail comment the following document identifier: ''Comments on Manomet EFP Proposal for Inclined Separation Panel Study.'' Written comments should be sent to Patricia A. Kurkul, Regional Administrator, NMFS, Northeast Regional Office, 1 Blackburn Drive, Gloucester, MA 01930. Mark the outside of the envelope ''Comments on Manomet EFP Proposal for Inclined Separation Panel Study.'' Comments may also be sent via facsimile (fax) to (978) 281–9135.

FOR FURTHER INFORMATION CONTACT: Jason Blackburn, Fishery Management Specialist, phone: 978–281–9326, fax: 978–281–9135.

SUPPLEMENTARY INFORMATION: An application for an EFP was submitted by Manomet Center for Conservation Sciences on April 2, 2004. The EFP would exempt three federally permitted commercial fishing vessels from the following requirements in the NE Multispecies FMP: The requirement to use a minimum mesh size of 6.0–inch (15.2–cm) diamond mesh or 6.5–inch (16.5–cm) square mesh in the body and extension of a trawl net while fishing in the GOM Regulated Mesh Area; the requirement to not fish in rolling closure areas; and the requirement to use a day-at-sea (DAS) while targeting groundfish for no more than 12 DAS.

The goal of this study is to assess the selectivity of a bycatch reduction device in the GOM groundfish fishery. The specific trawl design to be tested is referred to as an inclined separation panel. The separation panel consists of 4–inch (10.2–cm) diamond mesh sewn in the extension and codend of a conventional trawl net (6.5–inch (16.5–cm) diamond mesh codend). The vessel will target mixed groundfish (yellowtail flounder, winter flounder, American plaice, Atlantic cod, and summer flounder). The incidental catch is expected to be comprised of skates, dogfish, crab, lobster, and sculpin. According to the applicant, a trawl net of similar design has been proven successful at separating cod and other roundfish from flatfish in the Irish Sea fisheries.

The study will occur between June 1 and December 31, 2004. During the study, the number of tows will be limited to four valid tows per day. Tow duration will be approximately 1 hour per tow, and the total number of valid tows will not exceed 40 for the entire study. One vessel would fish in the 30–minute squares 123 and 124, inside the area defined as follows: The Maine shoreline at 69°30′ W long., south to 69°30' W long. at 43°10′ N lat. (avoiding the GOM year round closures), and west to the Maine shoreline at 43°10′ N lat. Two vessels would fish in a second area, occupying 30–minute squares 138, 139, 140, 146, and 147, inside the area defined as follows: The Massachusetts shoreline at 70°10′ W long., north to 70°10′ W long. at 42°15′ N lat., east to 42°15′ lat. at 69°50′ W long., south to 69°50' W long. at 42° N lat., and west along the 42° N lat. line to the Massachusetts shoreline. At no time will fishing operations be conducted inside permanent closures. All fish retained by the upper and lower codends would be counted, weighed, and measured. All legal catch would be sold, consistent with the current landing limits. Undersized fish would be returned to the sea as quickly as possible after measurement. The participating vessels would be required to report all landings in their Vessel Trip Reports.

Authority: 16 U.S.C. 1801 *et seq.*

Dated: May 12, 2004.

Alan D. Risenhoover,

Acting Director, Office of Sustainable Fisheries, National Marine Fisheries Service.

[FR Doc. E4–1161 Filed 5–14–03; 8:45 am]

BILLING CODE 3510–22–S

COMMITTEE FOR THE IMPLEMENTATION OF TEXTILE AGREEMENTS

Request for Public Comment on Commercial Availability Request under the United States-Singapore Free Trade Agreement (USSFTA)

May 11, 2004.

AGENCY: The Committee for the Implementation of Textile Agreements (CITA).

ACTION: Request for Public Comments concerning a request for modifications of the USSFTA rules of origin for apparel items made from certain yarns and fabrics.

SUMMARY: The Government of the United States has received a request from the Government of Singapore for consultations under Article 3.18.4(a)(i)

of the USSFTA. Singapore is seeking agreement to revise the rules of origin for certain apparel goods to address availability of supply of certain yarns and fabrics in the territories of the Parties. The request covers products that have been the subject of prior determinations made by CITA between November 16, 2002 and March 16, 2004 pursuant to the African Growth and Opportunity Act (AGOA), the Caribbean Basin Trade Partnership Act (CBTPA), and the Andean Trade Promotion and Drug Eradication Act (ATPDEA).

Section 202(o)(2) of the United States-Singapore Free Trade Agreement Implementation Act authorizes the President to proclaim a modification to the USSFTA rules of origin for textile and apparel products that are necessary to implement an agreement with Singapore pursuant to Article 3.18.4 of the USSFTA after complying with the consultation and layover requirements of that Act. Prior to entering negotiations with Singapore regarding its request, it is appropriate to seek public comment regarding the request. CITA hereby solicits public comments on this request, in particular with regard to whether the yarns and fabrics described below can be supplied by the domestic industry in commercial quantities in a timely manner. Comments must be submitted by June 16, 2004, to the Chairman, Committee for the Implementation of Textile Agreements, Room 3001, United States Department of Commerce, Washington, D.C. 20230.

FOR FURTHER INFORMATION CONTACT: Martin Walsh, International Trade Specialist, Office of Textiles and Apparel, U.S. Department of Commerce, (202) 482-3400.

SUPPLEMENTARY INFORMATION:

Background

Under the United States-Singapore Free Trade Agreement (USSFTA), USSFTA countries are required to eliminate customs duties on textile and apparel goods that qualify as originating goods under the USSFTA rules of origin, which are set out in Annex 3A to the USSFTA. The USSFTA provides that the rules of origin for textile and apparel products may be amended through a subsequent agreement by the USSFTA countries. In consultations regarding such a change, the USSFTA countries are to consider issues of availability of supply of fibers, yarns, or fabrics in the free trade area and whether domestic producers are capable of supplying commercial quantities of the good in a timely manner.

The government of the United States received a request from the government of Singapore requesting consultations on the rules of origin for certain products that have been the subject of prior determinations made by CITA under AGOA, CBTPA and ATPDEA, and requesting that the government of the United States consider whether the USSFTA rules of origin for these products should be modified to allow the use of certain yarns and fabrics that do not originate in the territory of the United States or Singapore. The products covered by this request are:

(1) Ring spun single yarn of nm 51 and 85, containing 50 percent or more, but less than 85 percent, by weight of 0.9 denier or finer micro modal fiber, mixed solely with U.S. origin extra long pima cotton, classified in subheading 5510.30.0000 of the Harmonized Tariff Schedule of the United States (HTSUS), for use in women's and girls' knit blouses, shirts, lingerie, and underwear.

(2) 100 percent cotton woven flannel fabrics, of yarns of different colors, containing ring-spun yarns of nm 21 through nm 36, of 2 X 2 twill weave construction, classified in subheading 5208.43.0000 of the HTSUS, for use in apparel other than gloves.

(3) Fabrics classified in subheadings 5210.21 and 5210.31 of the HTSUS, not of square construction, containing more than 70 warp ends and filling picks per square centimeter, of average yarn number exceeding 70 nm, for use in women's and girl's blouses.

(4) Micro-denier 30 singles and 36 singles solution dyed, open-end spun, staple spun viscose yarn, classified in subheading 5510.110000, for use in apparel.

CITA is soliciting public comments regarding this request, particularly with respect to whether the yarns and fabrics listed above can be supplied by the domestic industry in commercial quantities in a timely manner. Comments must be received no later than June 16, 2004. Interested persons are invited to submit six copies of such comments or information to the Chairman, Committee for the Implementation of Textile Agreements, room 3100, U.S. Department of Commerce, 14th and Constitution Avenue, N.W., Washington, DC 20230.

If a comment alleges that any of the yarns or fabrics listed above can be supplied by the domestic industry in commercial quantities in a timely manner, CITA will closely review any supporting documentation, such as a signed statement by a manufacturer stating that it produces a yarn or fabric that is in the subject of the request, including the quantities that can be supplied and the time necessary to fill an order, as well as any relevant information regarding past production.

CITA will protect any business confidential information that is marked ''business confidential'' from disclosure to the full extent permitted by law. CITA will make available to the public non-confidential versions of the request and non-confidential versions of any public comments received with respect to a request in room 3100 in the Herbert Hoover Building, 14th and Constitution Avenue, N.W., Washington, DC 20230. Persons submitting comments on a request are encouraged to include a non-confidential version and a non-confidential summary.

James C. Leonard III,

Chairman, Committee for the Implementation of Textile Agreements.

[FR Doc. 04–11123 Filed 5–14–04; 8:45 am]

BILLING CODE 3510–DR–S

COMMITTEE FOR THE IMPLEMENTATION OF TEXTILE AGREEMENTS

Adjustment of an Import Limit for Certain Cotton Textile Products Produced or Manufactured in the Federative Republic of Brazil

May 11, 2004.

AGENCY: Committee for the Implementation of Textile Agreements (CITA).

ACTION: Issuing a directive to the Commissioner, Bureau of Customs and Border Protection adjusting a limit.

EFFECTIVE DATE: May 18, 2004.

FOR FURTHER INFORMATION CONTACT: Naomi Freeman, International Trade Specialist, Office of Textiles and Apparel, U.S. Department of Commerce, (202) 482–4212. For information on the quota status of this limit, refer to the Quota Status Reports posted on the bulletin boards of each Customs port, call (202) 927–5850, or refer to the Bureau of Customs and Border Protection website at http://www.cbp.gov. For information on embargoes and quota re-openings, refer to the Office of Textiles and Apparel website at http://otexa.ita.doc.gov.

SUPPLEMENTARY INFORMATION:

Authority: Section 204 of the Agricultural Act of 1956, as amended (7 U.S.C. 1854); Executive Order 11651 of March 3, 1972, as amended.

The current limit for Category 363 is being increased for the recrediting of unused carryforward.

A description of the textile and apparel categories in terms of HTS numbers is available in the CORRELATION: Textile and Apparel Categories with the Harmonized Tariff Schedule of the United States (see **Federal Register** notice 69 FR 4926, published on February 2, 2004). Also see 68 FR 63070, published on November 7, 2003.

James C. Leonard III,

Chairman, Committee for the Implementation of Textile Agreements.

Committee for the Implementation of Textile Agreements

May 11, 2004.

Commissioner,
Bureau of Customs and Border Protection, Washington, DC 20229

Dear Commissioner: This directive amends, but does not cancel, the directive issued to you on November 3, 2003, by the Chairman, Committee for the Implementation of Textile Agreements. That directive concerns imports of certain cotton, wool and man-made fiber textile products, produced or manufactured in Brazil and exported during the twelve-month period which began on January 1, 2004 and extends through December 31, 2004.

Effective on May 18, 2004, you are directed to increase the current limit for Category 363 to 49,270,332 numbers [1], as provided for under the Uruguay Round Agreement on Textiles and Clothing.

The Committee for the Implementation of Textile Agreements has determined that this action falls within the foreign affairs exception to the rulemaking provisions of 5 U.S.C. 553(a)(1).

Sincerely,
James C. Leonard III,
Chairman, Committee for the Implementation of Textile Agreements.

[FR Doc. 04–11125 Filed 5–14–04; 8:45 am]

BILLING CODE 3510–DR–S

[1] The limit has not been adjusted to account for any imports exported after December 31, 2003.

COMMITTEE FOR THE IMPLEMENTATION OF TEXTILE AGREEMENTS

Adjustment of Import Limits for Certain Cotton and Wool Textile Products Produced or Manufactured in Colombia

May 11, 2004.

AGENCY: Committee for the Implementation of Textile Agreements (CITA).

ACTION: Issuing a directive to the Commissioner, Bureau of Customs and Border Protection adjusting limits.

EFFECTIVE DATE: May 18, 2004.

FOR FURTHER INFORMATION CONTACT: Naomi Freeman, International Trade Specialist, Office of Textiles and Apparel, U.S. Department of Commerce, (202) 482–4212. For information on the quota status of these limits, refer to the Quota Status Reports posted on the bulletin boards of each Customs port, call (202) 927–5850, or refer to the Bureau of Customs and Border Protection website at http://www.cbp.gov. For information on embargoes and quota re-openings, refer to the Office of Textiles and Apparel website at http://otexa.ita.doc.gov.

SUPPLEMENTARY INFORMATION:

Authority: Section 204 of the Agricultural Act of 1956, as amended (7 U.S.C. 1854); Executive Order 11651 of March 3, 1972, as amended.

The current limits for certain categories are being adjusted for swing and carryover.

A description of the textile and apparel categories in terms of HTS numbers is available in the CORRELATION: Textile and Apparel Categories with the Harmonized Tariff Schedule of the United States (see **Federal Register** notice 69 FR 4926, published on February 2, 2004). Also see 68 FR 63769, published on November 10, 2003.

James C. Leonard III,

Chairman, Committee for the Implementation of Textile Agreements.

Committee for the Implementation of Textile Agreements

May 11, 2004.

Commissioner,
Bureau of Customs and Border Protection, Washington, DC 20229.

Dear Commissioner: This directive amends, but does not cancel, the directive issued to you on November 4, 2003, by the Chairman, Committee for the Implementation of Textile Agreements. That directive concerns imports of certain cotton and wool textile products in the following categories, produced or manufactured in Colombia and exported during the twelve-month period which began on January 1, 2004 and extends through December 31, 2004.

Effective on May 18, 2004, you are directed to adjust the limits for the following categories, as provided for under the Uruguay Round Agreement on Textiles and Clothing:

Category	Adjusted twelve-month limit [1]
315	43,815,722 square meters.
443	167,857 numbers.

[1] The limits have not been adjusted to account for any imports exported after December 31, 2003.

The Committee for the Implementation of Textile Agreements has determined that these actions fall within the foreign affairs exception to the rulemaking provisions of 5 U.S.C. 553(a)(1).

Sincerely,
James C. Leonard III,
Chairman, Committee for the Implementation of Textile Agreements.

[FR Doc. 04–11126 Filed 5–14–04; 8:45 am]

BILLING CODE 3510–DR–S

COMMITTEE FOR THE IMPLEMENTATION OF TEXTILE AGREEMENTS

Adjustment of Import Limits for Certain Cotton, Wool, and Man-Made Textiles and Textile Products Produced or Manufactured in Romania

May 11, 2004.

AGENCY: Committee for the Implementation of Textile Agreements (CITA).

ACTION: Issuing a directive to the Commissioner, Bureau of Customs and Border Protection adjusting limits.

EFFECTIVE DATE: May 17, 2004.

FOR FURTHER INFORMATION CONTACT: Naomi Freeman, International Trade Specialist, Office of Textiles and Apparel, U.S. Department of Commerce, (202) 482–4212. For information on the quota status of these limits, refer to the Quota Status Reports posted on the bulletin boards of each Customs port, call (202) 927–5850, or refer to the Bureau of Customs and Border Protection website at http://www.cbp.gov. For information on embargoes and quota re-openings, refer to the Office of Textiles and Apparel website at http://otexa.ita.doc.gov.

SUPPLEMENTARY INFORMATION:

Authority: Section 204 of the Agricultural Act of 1956, as amended (7 U.S.C. 1854); Executive Order 11651 of March 3, 1972, as amended.

The current limits for certain categories are being adjusted for swing, special shift, carryover, and the recrediting of unused carryforward.

A description of the textile and apparel categories in terms of HTS numbers is available in the CORRELATION: Textile and Apparel Categories with the Harmonized Tariff Schedule of the United States (see **Federal Register** notice 69 FR 4926, published on February 2, 2004). Also

see 68 FR 55037, published on September 22, 2003.

James C. Leonard III,

Chairman, Committee for the Implementation of Textile Agreements.

Committee for the Implementation of Textile Agreements

May 11, 2004.

Commissioner, Bureau of Customs and Border Protection,
Washington, DC 20229.

Dear Commissioner: This directive amends, but does not cancel, the directive issued to you on September 16, 2003, by the Chairman, Committee for the Implementation of Textile Agreements. That directive concerns imports of certain cotton and wool textiles and textile products in the following categories, produced or manufactured in Romania and exported during the twelve-month period which began on January 1, 2004 and extends through December 31, 2004.

Effective on May 17, 2004, you are directed to adjust the limits for the following categories, as provided for under the Uruguay Round Agreement on Textiles and Clothing:

Category	Adjusted twelve-month limit [1]
315	7,219,385 square meters.
347/348	1,233,560 dozen.
410	137,033 square meters.
433/434	11,770 dozen.
435	16,587 dozen.
442	17,257 dozen.
443	43,250 numbers.
444	36,104 numbers.
447/448	35,293 dozen.
604	2,028,644 kilograms.
647/648	378,622 dozen.

[1] The limits have not been adjusted to account for any imports exported after December 31, 2003.

The Committee for the Implementation of Textile Agreements has determined that these actions fall within the foreign affairs exception to the rulemaking provisions of 5 U.S.C. 553(a)(1).

Sincerely,

James C. Leonard III,
Chairman, Committee for the Implementation of Textile Agreements.

[FR Doc. 04–11127 Filed 5–14–04; 8:45 am]

BILLING CODE 3510–DR–S

COMMITTEE FOR THE IMPLEMENTATION OF TEXTILE AGREEMENTS

Adjustment of Import Limits for Certain Cotton and Man-Made Fiber Textile Products Produced or Manufactured in Singapore

May 11, 2004.

AGENCY: Committee for the Implementation of Textile Agreements (CITA).

ACTION: Issuing a directive to the Commissioner, Bureau of Customs and Border Protection.

EFFECTIVE DATE: May 18, 2004.

FOR FURTHER INFORMATION CONTACT: Naomi Freeman, International Trade Specialist, Office of Textiles and Apparel, U.S. Department of Commerce, (202) 482–4212. For information on the quota status of these limits, refer to the Quota Status Reports posted on the bulletin boards of each Customs port, call (202) 927–5850, or refer to the Bureau of Customs and Border Protection website at http://www.cbp.gov. For information on embargoes and quota re-openings, refer to the Office of Textiles and Apparel website at http://otexa.ita.doc.gov.

SUPPLEMENTARY INFORMATION:

Authority: Section 204 of the Agricultural Act of 1956, as amended (7 U.S.C. 1854); Executive Order 11651 of March 3, 1972, as amended.

The current limits for certain categories are being adjusted for swing and carryover.

A description of the textile and apparel categories in terms of HTS numbers is available in the CORRELATION: Textile and Apparel Categories with the Harmonized Tariff Schedule of the United States (see **Federal Register** notice 69 FR 4926, published on February 2, 2004). Also see 68 FR 59925, published on October 20, 2003.

James C. Leonard III,

Chairman, Committee for the Implementation of Textile Agreements.

Committee for the Implementation of Textile Agreements

May 11, 2004.

Commissioner,
Bureau of Customs and Border Protection, Washington, DC 20229.

Dear Commissioner: This directive amends, but does not cancel, the directive issued to you on October 14, 2003, by the Chairman, Committee for the Implementation of Textile Agreements. That directive concerns imports of certain cotton, wool and man-made fiber textile products, produced or manufactured in Singapore and exported during the twelve-month period which began on January 1, 2004 and extends through December 31, 2004.

Effective on May 18, 2004, you are directed to adjust the limits for the following categories, as provided for under the Uruguay Round Agreement on Textiles and Clothing:

Category	Adjusted twelve-month limit [1]
338/339	2,496,302 dozen of which not more than 1,505,805 dozen shall be in Category 338 and not more than 1,548,675 dozen shall be in Category 339.
347/348	1,661,543 dozen of which not more than 1,038,462 dozen shall be in Category 347 and not more than 732,402 dozen shall be in Category 348.
639	4,716,361 dozen.
642	548,180 dozen.

[1] The limits have not been adjusted to account for any imports exported after December 31, 2003.

The Committee for the Implementation of Textile Agreements has determined that these actions fall within the foreign affairs exception to the rulemaking provisions of 5 U.S.C. 553(a)(1).

Sincerely,

James C. Leonard III,
Chairman, Committee for the Implementation of Textile Agreements.

[FR Doc. 04–11124 Filed 5–14–04; 8:45 am]

BILLING CODE 3510–DR–S

COMMITTEE FOR THE IMPLEMENTATION OF TEXTILE AGREEMENTS

Adjustment of Import Limits for Certain Cotton, Wool, Man-Made Fiber, Silk Blend and Other Vegetable Fiber Textiles and Textile Products Produced or Manufactured in Taiwan

May 12, 2004.

AGENCY: Committee for the Implementation of Textile Agreements (CITA).

ACTION: Issuing a directive to the Commissioner, Bureau of Customs and Border Protection adjusting limits.

EFFECTIVE DATE: May 17, 2004.

FOR FURTHER INFORMATION CONTACT: Ross Arnold, International Trade Specialist, Office of Textiles and Apparel, U.S. Department of Commerce, (202) 482–4212. For information on the quota status of these limits, refer to the Quota Status Reports posted on the bulletin boards of each Customs port, call (202)

927–5850, or refer to the Bureau of Customs and Border Protection website at http://www.cbp.gov. For information on embargoes and quota re-openings, refer to the Office of Textiles and Apparel website at http://otexa.ita.doc.gov.

SUPPLEMENTARY INFORMATION:

Authority: Section 204 of the Agricultural Act of 1956, as amended (7 U.S.C. 1854); Executive Order 11651 of March 3, 1972, as amended.

The current limits for certain categories are being adjusted for swing, special swing, and special shift.

A description of the textile and apparel categories in terms of HTS numbers is available in the CORRELATION: Textile and Apparel Categories with the Harmonized Tariff Schedule of the United States (see **Federal Register** notice 69 FR 4926, published on February 2, 2004). Also see 68 FR 59927, published on October 20, 2003.

James C. Leonard III,

Chairman, Committee for the Implementation of Textile Agreements.

Committee for the Implementation of Textile Agreements

May 12, 2004.

Commissioner of Customs,
Department of the Treasury, Washington, DC 20229.

Dear Commissioner: This directive amends, but does not cancel, the directive issued to you on October 14, 2003, by the Chairman, Committee for the Implementation of Textile Agreements. That directive concerns imports of certain cotton, wool, man-made fiber, silk blend and other vegetable fiber textiles and textile products, produced or manufactured in Taiwan and exported during the twelve-month period which began on January 1, 2004 and extends through December 31, 2004.

Effective on May 17, 2004, you are directed to adjust the current limits for the following categories, as provided for under the Uruguay Round Agreement on Textiles and Clothing:

Category	Twelve-month limit [1]
Group I	
200–220, 224, 225/317/326, 226, 227, 300/301, 313–315, 360–363, 369–S [2], 369–O [3], 400–414, 469pt [4], 603, 604, 611, 613/614/615/617, 618, 619/620, 624, 625/626/627/628/629 and 666pt [5], as a group.	237,302,979 square meters equivalent.
Sublevels in Group I	
225/317/326	47,470,682 square meters.
619/620	17,572,400 square meters.
625/626/627/628/629	22,865,845 square meters.
Within Group I subgroup	
604	264,493 kilograms.
Group II	
237, 239pt [6], 331pt. [7], 332, 333/334/335, 336, 338/339, 340–345, 347/348, 351, 352/652, 359–C/659–C [8], 659–H [9], 359pt. [10], 433-438, 440, 442, 443, 444, 445/446, 447/448, 459pt. [11], 631pt. [12], 633/634/635, 636, 638/639, 640, 641–644, 645/646, 647/648, 651, 659–S [13], 659pt. [14], 846 and 852, as a group.	611,803,810 square meters equivalent.
Sublevels in Group II	
336	161,767 dozen.
338/339	1,092,044 dozen.
340	1,182,880 dozen.
347/348	1,514,317 dozen of which not more than 1,288,567 dozen shall be in Categories 347–W/348–W [15].
352/652	3,816,294 dozen.
433	16,952 dozen.
435	28,220 dozen.
438	31,414 dozen.
444	67,601 numbers.
445/446	147,102 dozen.
638/639	6,459,961 dozen.
642	802,386 dozen.
647/648	5,351,981 dozen of which not more than 5,088,804 dozen shall be in Categories 647–W/648–W [16].
659–S	1,713,821 kilograms.
Within Group II Subgroup	
342	263,037 dozen.
351	287,652 dozen.
447/448	23,165 dozen.
636	388,397 dozen.
651	563,991 dozen.

[1] The limits have not been adjusted to account for any imports exported after December 31, 2003.

[2] Category 369–S: only HTS number 6307.10.2005.

[3] Category 369–O: all HTS numbers except 6307.10.2005 (Category 369–S); and 4202.12.4000, 4202.12.8020, 4202.12.8060, 4202.22.4020, 4202.22.4500, 4202.22.8030, 4202.32.4000, 4202.32.9530, 4202.92.0805, 4202.92.1500, 4202.92.3016, 4202.92.6091, 5601.10.1000, 5601.21.0090, 5701.90.1020, 5701.90.2020, 5702.10.9020, 5702.39.2010, 5702.49.1020, 5702.49.1080, 5702.59.1000, 5702.99.1010, 5702.99.1090, 5705.00.2020, 5805.00.3000, 5807.10.0510, 5807.90.0510, 6301.30.0010, 6301.30.0020, 6302,51.1000, 6302.51.2000, 6302.51.3000, 6302.51.4000, 6302.60.0010, 6302.60.0030, 6302.91.0005, 6302.91.0025, 6302.91.0045, 6302.91.0050, 6302.91.0060, 6303.11.0000, 6303.91.0010, 6303.91.0020, 6304.91.0020, 6304.92.0000, 6305.20.0000, 6306.11.0000, 6307.10.1020, 6307.10.1090, 6307.90.3010, 6307.90.4010, 6307.90.5010, 6307.90.8910, 6307.90.8945, 6307.90.9882, 6406.10.7700, 9404.90.1000, 9404.90.8040 and 9404.90.9505 (Category 369pt.).

[4] Category 469pt.: all HTS numbers except 5601.29.0020, 5603.94.1010, 6304.19.3040, 6304.91.0050, 6304.99.1500, 6304.99.6010, 6308.00.0010 and 6406.10.9020.

[5] Category 666pt.: all HTS numbers except 5805.00.4010, 6301.10.0000, 6301.40.0010, 6301.40.0020, 6301.90.0010, 6302.53.0010, 6302.53.0020, 6302.53.0030, 6302.93.1000, 6302.93.2000, 6303.12.0000, 6303.19.0010, 6303.92.1000, 6303.92.2010, 6303.92.2020, 6303.99.0010, 6304.11.2000, 6304.19.1500, 6304.19.2000, 6304.91.0040, 6304.93.0000, 6304.99.6020, 6307.90.9884, 9404.90.8522 and 9404.90.9522.

[6] Category 239pt.: only HTS number 6209.20.5040 (diapers).

[7] Category 331pt.: all HTS numbers except 6116.10.1720, 6116.10.4810, 6116.10.5510, 6116.10.7510, 6116.92.6410, 6116.92.6420, 6116.92.6430, 6116.92.6440, 6116.92.7450, 6116.92.7460, 6116.92.7470, 6116.92.8800, 6116.92.9400 and 6116.99.9510.

[8] Category 359–C: only HTS numbers 6103.42.2025, 6103.49.8034, 6104.62.1020, 6104.69.8010, 6114.20.0048, 6114.20.0052, 6203.42.2010, 6203.42.2090, 6204.62.2010, 6211.32.0010, 6211.32.0025 and 6211.42.0010; Category 659–C: only HTS numbers 6103.23.0055, 6103.43.2020, 6103.43.2025, 6103.49.2000, 6103.49.8038, 6104.63.1020, 6104.63.1030, 6104.69.1000, 6104.69.8014, 6114.30.3044, 6114.30.3054, 6203.43.2010, 6203.43.2090, 6203.49.1010, 6203.49.1090, 6204.63.1510, 6204.69.1010, 6210.10.9010, 6211.33.0010, 6211.33.0017 and 6211.43.0010.

[9] Category 659–H: only HTS numbers 6502.00.9030, 6504.00.9015, 6504.00.9060, 6505.90.5090, 6505.90.6090, 6505.90.7090 and 6505.90.8090.

[10] Category 359pt.: all HTS numbers except 6103.42.2025, 6103.49.8034, 6104.62.1020, 6104.69.8010, 6114.20.0048, 6114.20.0052, 6203.42.2010, 6203.42.2090, 6204.62.2010, 6211.32.0010, 6211.32.0025 and 6211.42.0010 (Category 359–C); 6115.19.8010, 6117.10.6010, 6117.20.9010, 6203.22.1000, 6204.22.1000, 6212.90.0010, 6214.90.0010, 6406.99.1550, 6505.90.1525, 6505.90.1540, 6505.90.2060 and 6505.90.2545.

[11] Category 459pt.: all HTS numbers except 6115.19.8020, 6117.10.1000, 6117.10.2010, 6117.20.9020, 6212.90.0020, 6214.20.0000, 6405.20.6030, 6405.20.6060, 6405.20.6090, 6406.99.1505 and 6406.99.1560.

[12] Category 631pt.: all HTS numbers except 6116.10.1730, 6116.10.4820, 6116.10.5520, 6116.10.7520, 6116.93.8800, 6116.93.9400, 6116.99.4800, 6116.99.5400 and 6116.99.9530.

[13] Category 659–S: only HTS numbers 6112.31.0010, 6112.31.0020, 6112.41.0010, 6112.41.0020, 6112.41.0030, 6112.41.0040, 6211.11.1010, 6211.11.1020, 6211.12.1010 and 6211.12.1020.

[14] Category 659pt.: all HTS numbers except 6103.23.0055, 6103.43.2020, 6103.43.2025, 6103.49.2000, 6103.49.8038, 6104.63.1020, 6104.63.1030, 6104.69.1000, 6104.69.8014, 6114.30.3044, 6114.30.3054, 6203.43.2010, 6203.43.2090, 6203.49.1010, 6203.49.1090, 6204.63.1510, 6204.69.1010, 6210.10.9010, 6211.33.0010, 6211.33.0017, 6211.43.0010 (Category 659–C); 6112.31.0010, 6112.31.0020, 6112.41.0010, 6112.41.0020, 6112.41.0030, 6112.41.0040, 6211.11.1010, 6211.11.1020, 6211.12.1010 and 6211.12.1020 (Category 659–S); 6502.00.9030, 6504.00.9015, 6504.00.9060, 6505.90.5090, 6505.90.6090, 6505.90.7090 and 6505.90.8090 (Category 659–H); 6115.11.0010, 6115.12.2000, 6117.10.2030, 6117.20.9030, 6212.90.0030, 6214.30.0000, 6214.40.0000, 6406.99.1510 and 6406.99.1540.

[15] Category 347–W: only HTS numbers 6203.19.1020, 6203.19.9020, 6203.22.3020, 6203.22.3030, 6203.42.4005, 6203.42.4010, 6203.42.4015, 6203.42.4025, 6203.42.4035, 6203.42.4045, 6203.42.4050, 6203.42.4060, 6203.49.8020, 6210.40.9033, 6211.20.1520, 6211.20.3810 and 6211.32.0040; Category 348–W: only HTS numbers 6204.12.0030, 6204.19.8030, 6204.22.3040, 6204.22.3050, 6204.29.4034, 6204.62.3000, 6204.62.4005, 6204.62.4010, 6204.62.4020, 6204.62.4030, 6204.62.4040, 6204.62.4050, 6204.62.4055, 6204.62.4065, 6204.69.6010, 6204.69.9010, 6210.50.9060, 6211.20.1550, 6211.20.6810, 6211.42.0030 and 6217.90.9050.

[16] Category 647–W: only HTS numbers 6203.23.0060, 6203.23.0070, 6203.29.2030, 6203.29.2035, 6203.43.2500, 6203.43.3500, 6203.43.4010, 6203.43.4020, 6203.43.4030, 6203.43.4040, 6203.49.1500, 6203.49.2015, 6203.49.2030, 6203.49.2045, 6203.49.2060, 6203.49.8030, 6210.40.5030, 6211.20.1525, 6211.20.3820 and 6211.33.0030; Category 648–W: only HTS numbers 6204.23.0040, 6204.23.0045, 6204.29.2020, 6204.29.2025, 6204.29.4038, 6204.63.2000, 6204.63.3000, 6204.63.3510, 6204.63.3530, 6204.63.3532, 6204.63.3540, 6204.69.2510, 6204.69.2530, 6204.69.2540, 6204.69.2560, 6204.69.6030, 6204.69.9030, 6210.50.5035, 6211.20.1555, 6211.20.6820, 6211.43.0040 and 6217.90.9060.

The limits set forth above are subject to adjustment pursuant to the provisions of the ATC and administrative arrangements notified to the Textiles Monitoring Body.

The Committee for the Implementation of Textile Agreements has determined that these actions fall within the foreign affairs exception of the rulemaking provisions of 5 U.S.C. 553(a)(1).

Sincerely,

James C. Leonard III,

Chairman, Committee for the Implementation of Textile Agreements.

[FR Doc. 04–11121 Filed 5–14–04; 8:45 am]

BILLING CODE 3510–DR–S

COMMITTEE FOR THE IMPLEMENTATION OF TEXTILE AGREEMENTS

Reduction of Import Limits for Certain Cotton and Man-Made Fiber Textiles and Textile Products Produced or Manufactured in the Socialist Republic of Vietnam to Address Data Discrepancies

May 13, 2004.

AGENCY: Committee for the Implementation of Textile Agreements (CITA).

ACTION: Issuing a directive to the Commissioner, Bureau of Customs and Border Protection.

EFFECTIVE DATE: May 17, 2004.

FOR FURTHER INFORMATION CONTACT: Naomi Freeman, International Trade Specialist, Office of Textiles and Apparel, U.S. Department of Commerce, (202) 482–4212. For information on the quota status of these limits, refer to the Quota Status Reports posted on the bulletin boards of each Customs port, call (202) 927–5850, or refer to the Bureau of Customs and Border Protection website at http://www.cbp.gov. For information on embargoes and quota re-openings, refer to the Office of Textiles and Apparel website at http://otexa.ita.doc.gov.

SUPPLEMENTARY INFORMATION:

Authority: Section 204 of the Agricultural Act of 1956, as amended (7 U.S.C. 1854); Executive Order 11651 of March 3, 1972, as amended.

During the negotiation of the U.S.-Vietnam Bilateral Textile Agreement, the United States became aware of possible discrepancies in the data regarding U.S. imports from Vietnam. As the specific limits in the Agreement were based in part on such data, the United States and Vietnam agreed to allow for adjustments to the specific limits if the United States discovered clear evidence of data discrepancies, presented this evidence to the Government of Vietnam, and the United States and Vietnam were unable to reach a satisfactory solution to resolve the discrepancies. U.S. Customs and Border Protection (CBP) undertook an extensive textile production verification visit to Vietnam and reported its findings to CITA in November. The United States has held consultations with the Government of Vietnam, presented clear evidence, and was unable to reach a mutually satisfactory solution with the Government of Vietnam, so CITA has concluded that approximately 1,000,000 dozen should be deducted from the negotiated limits to address data discrepancies found by CBP. In accordance with Paragraph 19(B) of the U.S.-Vietnam Bilateral Agreement, CITA is directing the Commissioner of CBP to adjust the limits for certain categories.

In addition, previously applied flexibility is being readjusted to reflect the revised base levels.

A description of the textile and apparel categories in terms of HTS numbers is available in the CORRELATION: Textile and Apparel Categories with the Harmonized Tariff Schedule of the United States (see **Federal Register** notice 69 FR 4926, published on February 2, 2004). Also see 68 FR 69673, published on December 15, 2003.

James C. Leonard III,

Chairman, Committee for the Implementation of Textile Agreements.

Committee for the Implementation of Textile Agreements

May 13, 2004.

Commissioner,

Bureau of Customs and Border Protection, Washington, DC 20229

Dear Commissioner: This directive amends, but does not cancel, the directive issued to you on December 10, 2003, by the Chairman, Committee for the Implementation of Textile Agreements. That directive concerns imports of certain cotton, wool and man-made fiber textiles and textile products, produced or manufactured in Vietnam and exported during the twelve-month period which began on January 1, 2004 and extends through December 31, 2004.

Effective on May 17, 2004, you are directed to adjust the limits for the following categories, as provided for under the terms of the current bilateral textile agreement between the Governments of the United States and Vietnam:

Category	Restraint limit [1]
334/335	664,537 dozen.
338/339	13,612,739 dozen.
340/640	2,045,803 dozen.
341/641	784,430 dozen.
342/642	556,409 dozen.
345	293,408 dozen.
347/348	6,909,409 dozen.
351/651	491,804 dozen.
352/652	1,873,677 dozen.
359–C/659–C [2]	334,572 kilograms.
638/639	1,229,457 dozen.
645/646	198,793 dozen.
647/648	1,999,245 dozen.

[1] The limits have not been adjusted to account for any imports exported after December 31, 2003.

[2] Category 359-C: only HTS numbers 6103.42.2025, 6103.49.8034, 6104.62.1020, 6104.69.8010, 6114.20.0048, 6114.20.0052, 6203.42.2010, 6203.42.2090, 6204.62.2010, 6211.32.0010, 6211.32.0025 and 6211.42.0010; Category 659-C: only HTS numbers 6103.23.0055, 6103.43.2020, 6103.43.2025, 6103.49.2000, 6103.49.8038, 6104.63.1020, 6104.63.1030, 6104.69.1000, 6104.69.8014, 6114.30.3044, 6114.30.3054, 6203.43.2010, 6203.43.2090, 6203.49.1010, 6203.49.1090, 6204.63.1510, 6204.69.1010, 6210.10.9010, 6211.33.0010, 6211.33.0017 and 6211.43.0010.

The Committee for the Implementation of Textile Agreements has determined that these actions fall within the foreign affairs exception to the rulemaking provisions of 5 U.S.C. 553(a)(1).

Sincerely,

James C. Leonard III,

Chairman, Committee for the Implementation of Textile Agreements.

[FR Doc. 04–11213 Filed 5–13–04; 12:36 pm]

BILLING CODE 3510–DR–S

COMMITTEE FOR THE IMPLEMENTATION OF TEXTILE AGREEMENTS

Amendment of Coverage of Import Limit, Visa, and Electronic Visa Information System (ELVIS) Requirements for Certain Gloves Produced or Manufactured in Various Countries

May 10, 2004.

AGENCY: Committee for the Implementation of Textile Agreements (CITA).

ACTION: Issuing a directive to the Commissioner, Bureau of Customs and Border Protection amending coverage of an import limit, visa, and ELVIS requirements for certain gloves.

EFFECTIVE DATE: May 17, 2004.

FOR FURTHER INFORMATION CONTACT: Martin Walsh, International Trade Specialist, Office of Textiles and Apparel, U.S. Department of Commerce, (202) 482-3400.

SUPPLEMENTARY INFORMATION:

Authority: Section 204 of the Agricultural Act of 1956, as amended (7 U.S.C. 1854); Executive Order 11651 of March 3, 1972, as amended.

From at least 1996, the Bureau of Customs and Border Protection (CBP)classified various styles of ''mechanics' gloves'' (gloves specifically and demonstrably designed for use by professional mechanics and racing enthusiasts during racing) in subheading 6216.00.4600 of the Harmonized Tariff Schedule of the United States (HTS), which provides for ''gloves, mittens and mitts: other: of man-made-fibers: . . . designed for use in sports, . . .''. This HTS provision has never fallen within the U.S. textile category structure. On September 24, 2003, CBP revoked prior Customs rulings on mechanics' gloves, reclassifying them in HTS 6216.00.5820, which falls under textile category 631. (HQ 966648 September 10, 2003). There were minimal imports classified in HTS 6216.00.5820 prior to the effective date of the reclassification.

To reflect this reclassification, and to maintain the balance ofconcessions negotiated under the World Trade Organization Agreement onTextiles and Clothing, CITA is eliminating quota, visa, and ELVIS requirements for HTS 6216.00.5820. In the letter published below, the Chairman of CITA directs the Commissioner of the Bureau of Customs and Border Protection to eliminate quota, visa, and ELVIS requirements for goods classified in HTS 6216.00.5820. This action applies to goods exported on or after May 17, 2004.

James C. Leonard III,

Chairman, Committee for the Implementation of Textile Agreements.

Committee for the Implementation of Textile Agreements

May 10, 2004.

Commissioner,

Bureau of Customs and Border Protection, Washington, DC 20229.

This directive amends, but does not cancel, all monitoring and import control directives, all visa, and ELVIS requirement directives, issued to you by the Chairman, Committee for the Implementation of Textile Agreements, which include man-made fiber textile products in Category 631, produced or manufactured in various countries.

Effective on May 17, 2004, you are directed to eliminate quota, visa, and ELVIS requirements for HTSUS # 6216.00.5820 in Category 631 for goods exported on or after May 17, 2004.

The Committee for the Implementation of Textile Agreements has determined that this action falls within the foreign affairs exception to the rulemaking provisions of 5 U.S.C.553(a)(1).

Sincerely,

James C. Leonard III,

Chairman, Committee for the Implementation of Textile Agreements.

[FR Doc. 04–11122 Filed 5–14–04; 8:45 am]

BILLING CODE 3510–DR–S

COMMODITY FUTURES TRADING COMMISSION

Sunshine Act Meetings

AGENCY HOLDING THE MEETING: Commodity Futures Trading Commission.

TIME AND DATE: 11 a.m., Friday, June 4, 2004.

PLACE: 1155 21st St., NW., Washington, DC, Room 1012.

STATUS: Closed.

MATTERS TO BE CONSIDERED:

Surveillance Matters.

CONTACT PERSON FOR MORE INFORMATION: Jean A. Webb, 202–418–5100.

Jean A. Webb,

Secretary of the Commission.

[FR Doc. 04–11185 Filed 5–13–04; 10:39 am]

BILLING CODE 6351–01–M

COMMODITY FUTURES TRADING COMMISSION

Sunshine Act Meetings

AGENCY HOLDING THE MEETING: Commodity Futures Trading Commission.

TIME AND DATE: 11 a.m., Friday, June 11, 2004.

PLACE: 1155 21st St., NW., Washington, DC, Room 1012.

STATUS: Closed.

MATTER TO BE CONSIDERED:

Surveillance Matters.

CONTACT PERSON FOR MORE INFORMATION: Jean A. Webb, 202–418–5100.

Jean A. Webb,

Secretary of the Commission.

[FR Doc. 04–11186 Filed 5–13–04; 10:39 am]

BILLING CODE 6351–01–M

COMMODITY FUTURES TRADING COMMISSION

Sunshine Act Meetings

AGENCY HOLDING THE MEETING: Commodity Futures Trading Commission.

TIME AND DATE: 11 a.m., Friday, June 18, 2004.

PLACE: 1155 21st St., NW., Washington, DC, Room 1012.

STATUS: Closed.

MATTERS TO BE CONSIDERED:

Surveillance Matters.

CONTACT PERSON FOR MORE INFORMATION: Jean A. Webb, 202–418–5100.

Jean A. Webb,

Secretary of the Commission.

[FR Doc. 04–11187 Filed 5–13–04; 10:39 am]

BILLING CODE 6351–01–M

COMMODITY FUTURES TRADING COMMISSION

Sunshine Act Meetings

AGENCY HOLDING THE MEETING: Commodity Futures Trading Commission.

TIME AND DATE: 11 a.m., Friday, June 25, 2004.

PLACE: 1155 21st St., NW., Washington, DC, Room 1012.

STATUS: Closed.

MATTERS TO BE CONSIDERED: Surveillance Matters.

CONTACT PERSON FOR MORE INFORMATION: Jean A. Webb, 202–418–5100.

Jean A. Webb,

Secretary of the Commission.

[FR Doc. 04–11188 Filed 5–13–04; 10:39 am]

BILLING CODE 6351–01–M

CONSUMER PRODUCT SAFETY COMMISSION

Notice of Submission for OMB Review of Collection of Information Approval Extension and Request for Comments—Amended Interim Safety Standard for Cellulose Insulation

AGENCY: Consumer Product Safety Commission.

ACTION: Notice.

SUMMARY: In the **Federal Register** of March 3, 2004 (69 FR 10001), the Consumer Product Safety Commission published a notice in accordance with provisions of the Paperwork Reduction Act of 1995 (44 U.S.C. Chapter 35) to announce the agency's intention to seek extension of approval of the collection of information in regulations implementing the Amended Interim Safety Standard for Cellulose Insulation. 16 CFR part 1209. No comments were received in response to the March 3, 2004 notice. The Commission now announces that it has submitted to the Office of Management and Budget a request for extension of approval of that collection of information without change for a period of three years from the date of approval.

The cellulose insulation standard prescribes requirements for flammability and corrosiveness of cellulose insulation produced for sale to or use by consumers. The standard requires manufacturers and importers of cellulose insulation to test insulation for resistance to smoldering and small open-flame ignition, and for corrosiveness, and to maintain records of that testing.

Additional Information About the Request for Extension of Approval of Information Collection Requirements

Agency address: Consumer Product Safety Commission, Washington, DC 20207.

Title of information collection: Amended Interim Safety Standard for Cellulose Insulation. 16 CFR part 1209.

Type of request: Extension of approval.

General description of respondents: Manufacturers and importers of cellulose insulation.

Estimated number of respondents: 45.

Estimated average number of hours per respondent: 1,320 per year.

Estimated number of hours for all respondents: 59,400 per year.

Estimated cost of collection for all respondents: $1,454,000 per year.

Comments: Comments on this request for reinstatement of approval of information collection requirements should be submitted by June 16, 2004 to (1) The Office of Information and Regulatory Affairs, Attn: OMB Desk Officer for CPSC, Office of Management and Budget, Washington, DC 20503; telephone: (202) 395–7340, and (2) the Office of the Secretary, Consumer Product Safety Commission, Washington, DC 20207. Written comments may also be sent to the Office of the Secretary by facsimile at (301) 504–0127 or by e-mail at *cpsc-os@cpsc.gov.*

Copies of this request for renewal of the information collection requirements and supporting documentation are available from Linda Glatz, management and program analyst, Office of Planning and Evaluation, Consumer Product Safety Commission, Washington, DC 20207; telephone: (301) 504–7671.

Dated: May 11, 2004.

Todd A Stevenson,

Secretary, Consumer Product Safety Commission.

[FR Doc. 04–11034 Filed 5–14–04; 8:45 am]

BILLING CODE 6355–01–P

DEPARTMENT OF DEFENSE

Office of the Secretary

Renewal of the Defense Department Advisory Committee on Women in the Services

AGENCY: Department of Defense.

ACTION: Notice.

SUMMARY: The Defense Department Advisory Committee on Women in the Services (DACOWITS) was renewed effective April 17, 2004, in consonance with the public interest, and in accordance with the provisions of the ''Federal Advisory Committee Act.''

The Committee shall provide, through the Assistant Secretary of Defense (Principal Deputy Under Secretary of Defense for Personnel and Readiness), advice and recommendations on matters and policies relating to the recruitment and retention, treatment, employment, integration, and well-being of a highly qualified professional military women in the Armed Forces. In addition, the committee provides advice and recommendations on family issues related to the recruitment and retention of a highly qualified professional military.

The Defense Department Advisory Committee on Women in the Services (DACOWITS) is well balanced in terms of the interest groups represented and functions to be performed. The Committee consists of approximately 13 civilian members representing an equitable distribution of demography, professional career fields, community service, and geography, and selected on the basis of their experience in the military, as a member of a military family, or with women's or family-related workforce issues.

FOR FURTHER INFORMATION CONTACT: Contact COL Denise Dailey, DACOWITS Executive Director, 703–697–2122.

Dated: May 10, 2004.

L.M. Bynum,

Alternate OSD Federal Register, Liaison Officer, Department of Defense.

[FR Doc. 04–11044 Filed 5–14–04; 8:45 am]

BILLING CODE 5001–08–M

DEPARTMENT OF DEFENSE

Office of the Secretary

President's Information Technology Advisory Committee (PITAC)

AGENCY: Office of the Secretary, DoD.

ACTION: Notice of open meeting.

SUMMARY: The PITAC meeting will focus on the U.S. Government investment in networking and information technology research and development with special attention to three specific applications areas. The first half of the meeting will include a report by the PITAC Health and IT Subcommittee on the draft of its final report and a status report by the PITAC Cyber Security Subcommittee. The second half will include presentations that launch the PITAC Computational Science Subcommittee. A final agenda will be posted on the PITAC Web site (*http://www.nitrd.gov/*

pitac/) approximately two weeks before the meeting.

DATES: June 17, 2004, 11 a.m. to 3 p.m.

ADDRESSES: Via WebEx and in Room 1235, National Science Foundation, 4201 Wilson Blvd., Arlington, VA 22230.

SUPPLEMENTARY INFORMATION: The public may attend the meeting on-line via the Internet or in person at the above address. To participate on-line, you must contact the National Coordination Office (NCO) for Information Technology Research and Development (ITRD) at the address below to register and receive instructions; registration prior to the meeting is required. Although no prior registration is needed to attend in person, it is highly recommended to speed your access to the NSF meeting room.

Members of the public are invited to participate by (1) submitting written statements do the PITAC at *pitac-comments@nitrd.gov.* and/or (2) giving a brief (three minutes or less) oral statement during the public comment periods identified on the meeting agenda.

FOR FURTHER INFORMATION CONTACT: Please contact the National Coordination Office at 703–292–4873 or *pitac-comments@nitrd.gov.*

Dated: May 11, 2004.

L.M. Bynum,

Alternate OSD Federal Register Liaison Officer, Department of Defense.

[FR Doc. 04–11045 Filed 5–14–04; 8:45 am]

BILLING CODE 5001–06–M

DEPARTMENT OF DEFENSE

Department of the Navy

Privacy Act of 1974; System of Records

AGENCY: Department of the Navy, DoD.

ACTION: Notice to Delete and Amend Systems of Records.

SUMMARY: The Department of the Navy is deleting one and amending two systems of records notices in its existing inventory of records systems subject to the Privacy Act of 1974, (5 U.S.C. 552a), as amended.

DATES: This proposed action will be effective without further notice on June 16, 2004 unless comments are received which result in a contrary determination.

ADDRESSES: Send comments to Department of the Navy, PA/FOIA Policy Branch, Chief of Naval Operations, (DNS–36), 2000 Navy Pentagon, Washington, DC 20350–2000.

FOR FURTHER INFORMATION CONTACT: Mrs. Doris Lama at (202) 685–6545 or DSN 325–6545.

SUPPLEMENTARY INFORMATION: The Department of the Navy systems of records notices subject to the Privacy Act of 1974, (5 U.S.C. 552a), as amended, have been published in the **Federal Register** and are available from the address above.

The specific changes to the records systems being amended are set forth below followed by the notices, as amended, published in their entirety. The proposed amendments are not within the purview of subsection (r) of the Privacy Act of 1974, (5 U.S.C. 552a), as amended, which requires the submission of a new or altered system report.

Dated: May 10, 2004.

L.M. Bynum,

Alternate OSD Federal Register Liaison Officer, Department of Defense.

Deletion
MMN00022

SYSTEM NAME:

Vehicle Control System (January 4, 2000, 65 FR 291).

Reason: Records are now being maintained under a Department of the Navy Privacy Act system of records notice NM05512–1, entitled 'Vehicle Control System'.

Amendments
N05512–1

SYSTEM NAME:

Vehicle Control System (May 9, 2003, 68 FR 24959).

CHANGES:

SYSTEM IDENTIFIER:

Replace entry with 'NM05512–1'.

* * * * *

SYSTEM LOCATION:

Delete first paragraph and replace with 'Organizational elements of the Department of the Navy. Official mailing addresses are published in the Standard Navy Distribution List that is available at *http://neds.nebt.daps.mil/sndl.htm.*'

* * * * *

AUTHORITY FOR MAINTENANCE OF THE SYSTEM:

Delete entry and replace with 10 U.S.C. 5013, Secretary of the Navy: 10 U.S.C. 5041, Headquarters, Marine Corps; and E.O. 9397 (SSN).

* * * * *

STORAGE:

Delete entry and replace with 'Paper and automated records'.

RETRIEVABILITY:

Delete entry and replace with 'Individual's name, Social Security Number, state license plate number, case number, and organization.'

* * * * *

NM05512–1

SYSTEM NAME:

Vehicle Control System.

SYSTEM LOCATION:

Organizational elements of the Department of the Navy. Official mailing addresses are published in the Standard Navy Distribution List that is available at *http://neds.nebt.daps.mil/sndl.htm.*

Commander, U.S. Joint Forces Command, 1562 Mitscher Avenue, Suite 200, Norfolk, VA 23551–2488.

Commander, U.S. Pacific Command, P.O. Box 64028, Camp H.M. Smith, HI 96861–4028.

CATEGORIES OF INDIVIDUALS COVERED BY THE SYSTEM:

Individuals who have registered their vehicles, boats, or trailers at a Navy/combatant command installation; individuals who have applied for a Government Motor Vehicle Operator's license; and individuals who possess a Government Motor Vehicle Operator's license with authority to operate government vehicles.

CATEGORIES OF RECORDS IN THE SYSTEM:

File contains records of each individual who has registered a vehicle on the installation concerned to include decal data, insurance information, state of registration and identification. Applications may contain such information as name, date of birth, Social Security Number, Driver's license information (*i.e.,* height, weight, hair and eye color), place of employment, driving record, Military I.D. information, etc. File also contains records/notations of traffic violations, citations, suspensions, applications for government vehicle operator's I.D. card, operator qualifications and record licensing examination and performance, record of failures to qualify for a Government Motor Vehicle Operator's permit, record of government motor vehicle and other vehicle's accidents, and information on student driver training.

AUTHORITY FOR MAINTENANCE OF THE SYSTEM:

10 U.S.C. 5013, Secretary of the Navy; 10 U.S.C. 5041, Headquarters, Marine Corps; and E.O. 9397 (SSN).

PURPOSE(S):

To provide a record of each individual who has registered a vehicle

in an installation to include a record on individuals authorized to operate official government vehicles.

Routine uses of records maintained in the system, including categories of users and the purposes of such uses:

In addition to those disclosures generally permitted under 5 U.S.C. 552a(b) of the Privacy Act, these records or information contained therein may specifically be disclosed outside the DoD as a routine use pursuant to 5 U.S.C. 552a(b)(3) as follows:

The DoD ''Blanket Routine Uses'' that appear at the beginning of the Navy's compilation of systems of records notices apply to this system.

Policies and practices for storing, retrieving, accessing, retaining, and disposing of records in the system:

STORAGE:

Paper and automated records.

RETRIEVABILITY:

Individual's name, Social Security Number, state license plate number, case number, and organization.

SAFEGUARDS:

Limited access provided on a need-to-know basis only. Information maintained on computers is password protected. Files maintained in locked and/or guarded office.

RETENTION AND DISPOSAL:

Records are maintained for one year after transfer or separation from the installation concerned. Paper records are then destroyed and records on magnetic tapes erased.

SYSTEM MANAGER(S) AND ADDRESS:

Commanding officer of the activity in question. Official mailing addresses are published in the Standard Navy Distribution List that is available at *http://neds.nebt.daps._mil/sndl.htm.*

NOTIFICATION PROCEDURE:

Individuals seeking to determine whether this system of records contains information about themselves should address written inquiries to the Commanding Officer or head of the activity where assigned. Official mailing addresses are published in the Standard Navy Distribution List that is available at *http://neds.nebt.daps._mil/sndl.htm.*

Written requests should contain the individual's full name, Social Security Number, and the request must be signed.

RECORD ACCESS PROCEDURES:

Individuals seeking access to records about themselves should address written inquiries to the Commanding Officer or head of the activity where assigned. Official mailing addresses are published in the Standard Navy Distribution List that is available at *http://neds.nebt.daps._mil/sndl.htm.*

Written requests should contain the individual's full name, Social Security Number, and the request must be signed.

CONTESTING RECORD PROCEDURES:

The Navy's rules for accessing records, and for contesting contents and appealing initial agency determinations are published in Secretary of the Navy Instruction 5211.5; 32 CFR part 701; or may be obtained from the system manager.

RECORD SOURCE CATEGORIES:

Individual concerned, driving record, insurance papers, activity correspondence, investigators reports, and witness statements.

EXEMPTIONS CLAIMED FOR THE SYSTEM:

None.

N05512–2

SYSTEM NAME:

Badge and Access Control System (May 9, 2003, 68 FR 24959).

Changes:

SYSTEM IDENTIFIER:

Replace entry with 'NM05512–2'.

* * * * *

SYSTEM LOCATION:

Delete first paragraph and replace with 'Organizational elements of the Department of the Navy. Official mailing addresses are published in the Standard Navy Distribution List that is available at *http://neds.nebt.daps.mil/sndl.htm.*'

* * * * *

CATEGORIES OF RECORDS IN THE SYSTEM:

Add to end of entry 'and information that reflects time of entry/exit from facility.'

AUTHORITY FOR MAINTENANCE OF THE SYSTEM:

Delete entry and replace with '10 U.S.C. 5013, Secretary of the Navy; 10 U.S.C. 5041, Headquarters, Marine Corps; OPNAVINST 5530.14C, Navy Physical Security; Marine Corps Order P5530.14, Marine Corps Physical Security Program Manual; and E.O. 9397 (SSN)'.

PURPOSE(S):

Add to end of entry 'and track the entry/exit times of personnel'.

* * * * *

NM05512–2

SYSTEM NAME:

Badge and Access Control System.

SYSTEM LOCATION:

Organizational elements of the Department of the Navy. Official mailing addresses are published in the Standard Navy Distribution List that is available at *http://neds.nebt.daps.mil/sndl.htm.*

Commander, U.S. Joint Forces Command, 1562 Mitscher Avenue, Suite 200, Norfolk, VA 23551–2488.

Commander, U.S. Pacific Command, P.O. Box 64028, Camp H.M. Smith, HI 96861–4028.

CATEGORIES OF INDIVIDUALS COVERED BY THE SYSTEM:

Individuals considered or seeking consideration for access to space under the control of the Department of the Navy/combatant command and any visitor (military, civilian, or contractor) requiring access to a controlled facility.

CATEGORIES OF RECORDS IN THE SYSTEM:

Visit requests for permission to transact commercial business; visitor clearance data for individuals to visit a Navy/Marine Corps base/activity/contractor facility; barring lists and letters of exclusion; badge/pass issuance records; and information that reflects time of entry/exit from facility.

AUTHORITY FOR MAINTENANCE OF THE SYSTEM:

10 U.S.C. 5013, Secretary of the Navy; 10 U.S.C. 5041, Headquarters, Marine Corps; OPNAVINST 5530.14C, Navy Physical Security; Marine Corps Order P5530.14, Marine Corps Physical Security Program Manual; and E.O. 9397 (SSN).

PURPOSE(S):

To maintain all aspects of proper access control; to issue badges, replace lost badges and retrieve passes upon separation; to maintain visitor statistics; collect information to adjudicate access to facility; and track the entry/exit times of personnel.

Routine uses of records maintained in the system, including categories of users and the purposes of such uses: In addition to those disclosures generally permitted under 5 U.S.C. 552a(b) of the Privacy Act, these records of information contained therein may specifically be disclosed outside the DoD as a routine use pursuant to 5 U.S.C. 552a(b)(3) as follows:

To designated contractors, Federal agencies and foreign governments for the purpose of granting Navy officials access to their facility.

The DoD 'Blanket Routine Uses' that appear at the beginning of the Navy's compilation of systems of records notices apply to this system.

Policies and practices for storing, retrieving, accessing, retaining, and disposing of records in the system:

STORAGE:

File folders, card files, magnetic tape, personal computers, and electronic badging system.

RETRIEVABILITY:

Name, Social Security Number, Case number, organization, and company name.

SAFEGUARDS:

Access is provided on a need-to-know basis only. Manual records are maintained in file cabinets under the control of authorized personnel during working hours. The office space in which the file cabinets are located is locked outside of official working hours. Computer terminals are located in supervised areas. Access is controlled by password or other user code system.

RETENTION AND DISPOSAL:

Badges and passes are destroyed three months after return to issuing office. Records of issuance are destroyed six months after new accountability system is established or one year after final disposition of each issuance record is entered in retention log or similar record, whichever is earlier. Visit request records are destroyed two years after final entry or two years after date of document, whichever is later.

SYSTEM MANAGER(S) AND ADDRESS:

Policy Official: Chief of Naval Operations (N09N2), 2000 Navy Pentagon, Washington, DC 20350–2000.

Record Holder: Commanding officer of the activity in question. Official mailing addresses are published as an appendix to the Navy's compilation of systems of records notices.

NOTIFICATION PROCEDURE:

Individuals seeking to determine whether information about themselves is contained in this system should address written inquiries to the Commanding officer of the activity in question. Official mailing addresses are published in the Standard Navy Distribution List that is available at *http://neds. nebt.daps.mil/sndl.htm.*

Individual should provide full name and Social Security Number and sign the request.

RECORD ACCESS PROCEDURES:

Individuals seeking access to information about themselves contained in this system should address written inquiries to the Commanding officer of the activity in question. Official mailing addresses are published in the Standard Navy Distribution List that is available at *http://neds.nebt.daps.mil/sndl.htm.*

Individual should provide full name, Social Security Number, and sign the request.

CONTESTING RECORD PROCEDURES:

The Navy's rules for accessing records, and for contesting contents and appealing initial agency determinations are published in Secretary of the Navy Instruction 5211.5; 32 CFR part 701; or may be obtained from the system manager.

RECORD SOURCE CATEGORIES:

Visit requests; individual; records of the activity; investigators; witnesses; contractors; and companies.

EXEMPTIONS CLAIMED FOR THE SYSTEM:

None.

[FR Doc. 04–11046 Filed 5–14–04; 8:45 am]

BILLING CODE 5001–06–M

DEPARTMENT OF EDUCATION

Submission for OMB Review; Comment Request

AGENCY: Department of Education.

SUMMARY: The Leader, Regulatory Information Management Group, Office of the Chief Information Officer invites comments on the submission for OMB review as required by the Paperwork Reduction Act of 1995.

DATES: Interested persons are invited to submit comments on or before June 16, 2004.

ADDRESSES: Written comments should be addressed to the Office of Information and Regulatory Affairs, Attention: Alice Thaler, Desk Officer, Department of Education, Office of Management and Budget, 725 17th Street, NW., Room 10222, New Executive Office Building, Washington, DC 20503 or faxed to (202) 395–6974.

SUPPLEMENTARY INFORMATION: Section 3506 of the Paperwork Reduction Act of 1995 (44 U.S.C. Chapter 35) requires that the Office of Management and Budget (OMB) provide interested Federal agencies and the public an early opportunity to comment on information collection requests. OMB may amend or waive the requirement for public consultation to the extent that public participation in the approval process would defeat the purpose of the information collection, violate State or Federal law, or substantially interfere with any agency's ability to perform its statutory obligations. The Leader, Regulatory Information Management Group, Office of the Chief Information Officer, publishes that notice containing proposed information collection requests prior to submission of these requests to OMB. Each proposed information collection, grouped by office, contains the following: (1) Type of review requested, *e.g.* new, revision, extension, existing or reinstatement; (2) Title; (3) Summary of the collection; (4) Description of the need for, and proposed use of, the information; (5) Respondents and frequency of collection; and (6) Reporting and/or Recordkeeping burden. OMB invites public comment.

Dated: May 12, 2004.

Angela C. Arrington,

Leader, Regulatory Information Management Group, Office of the Chief Information Officer.

Office of Elementary and Secondary Education

Type of Review: Reinstatement.

Title: State Data Collection for the McKinney-Vento Homeless Assistance Act.

Frequency: Annually.

Affected Public: State, Local, or Tribal Gov't, SEAs or LEAs.

Reporting and Recordkeeping Hour Burden: Responses: 51. Burden Hours: 4,080.

Abstract: State Education Agencies will submit information to the Department of Education to be able to determine the extent to which States ensure homeless children and youth have access to a free, appropriate public education under Title X Part C of the No Child Left Behind Act of 2001. The purpose of the Education for Homeless Children and Youth Program is to improve the educational outcomes for children and youth in homeless situations. The statues for this program are designed to ensure all homeless children and youth have equal access to public school education and for States and LEAs to review and revise policies and regulations to remove barriers to enrolling, attendance and academic achievement.

Requests for copies of the submission for OMB review; comment request may be accessed from *http://edicsweb.ed.gov,* by selecting the ''Browse Pending Collections'' link and by clicking on link number 2476. When you access the information collection, click on ''Download Attachments ''to view. Written requests for information should be addressed to Department of Education, 400 Maryland Avenue, SW., Potomac Center, 9th Floor, Washington, DC 20202–4700. Requests may also be electronically mailed to the Internet address *OCIO_RIMG@ed.gov* or faxed to (202) 245–6623. Please specify the

complete title of the information collection when making your request.

Comments regarding burden and/or the collection activity requirements should be directed to Kathy Axt at her e-mail address *Kathy.Axt@ed.gov.* Individuals who use a telecommunications device for the deaf (TDD) may call the Federal Information Relay Service (FIRS) at 1–800–877–8339.

[FR Doc. 04–11138 Filed 5–14–04; 8:45 am]

BILLING CODE 4000–01–P

DEPARTMENT OF EDUCATION

William D. Ford Federal Direct Loan Program

AGENCY: Federal Student Aid, Department of Education.

ACTION: Notice of the annual updates to the Income Contingent Repayment (ICR) plan formula for 2004.

SUMMARY: The Secretary announces the annual updates to the ICR plan formula for 2004. Under the William D. Ford Federal Direct Loan (Direct Loan) Program, borrowers may choose to repay their student loans (Direct Subsidized Loan, Direct Unsubsidized Loan, Direct Subsidized Consolidation Loan, and Direct Unsubsidized Consolidation Loan) under the ICR plan, which bases the repayment amount on the borrower's income, family size, loan amount, and interest rate. Each year, we adjust the formula for calculating a borrower's payment to reflect changes due to inflation. This notice contains the adjusted income percentage factors for 2004 and charts showing sample repayment amounts based on the adjusted ICR plan formula. It also contains examples of how the calculation of the monthly ICR amount is performed and a constant multiplier chart for use in performing the calculations. The adjustments for the ICR plan formula contained in this notice are effective from July 1, 2004, to June 30, 2005.

FOR FURTHER INFORMATION CONTACT: Don Watson, U.S. Department of Education, room 092B1, UCP, 400 Maryland Avenue, SW., Washington, DC 20202–5400. Telephone: (202) 377–4008.

If you use a telecommunications device for the deaf (TDD), you may call the Federal Information Relay Service (FIRS) at 1–800–877–8339.

Individuals with disabilities may obtain this document in an alternative format (*e.g.*, Braille, large print, audiotape, or computer diskette) on request to the contact person listed under **FOR FURTHER INFORMATION CONTACT.**

SUPPLEMENTARY INFORMATION: Direct Loan Program borrowers may choose to repay their Direct Subsidized Loan, Direct Unsubsidized Loan, Direct Subsidized Consolidation Loan, and Direct Unsubsidized Consolidation Loan under the ICR plan. The attachment to this notice provides updates to examples of how the calculation of the monthly ICR amount is performed, the income percentage factors, the constant multiplier chart, and charts showing sample repayment amounts.

We have updated the income percentage factors to reflect changes based on inflation. We have revised the table of income percentage factors by changing the dollar amounts of the incomes shown by a percentage equal to the estimated percentage change in the Consumer Price Index for all urban consumers from December 2003 to December 2004. Further, we provide examples of monthly repayment amount calculations and two charts that show sample repayment amounts for single and married or head-of-household borrowers at various income and debt levels based on the updated income percentage factors.

The updated income percentage factors, at any given income, may cause a borrower's payments to be slightly lower than they were in prior years. This updated amount more accurately reflects the impact of inflation on a borrower's current ability to repay.

Electronic Access to This Document

You may review this document, as well as all other documents of this Department published in the **Federal Register**, in text or Adobe Portable Document Format (PDF) on the Internet at the following site: *http://www.ed.gov/news/federegister.*

To use PDF you must have Adobe Acrobat Reader, which is available free at this site. If you have questions about using PDF, call the U.S. Government Printing Office (GPO), toll free at 1–888–293–6498; or in the Washington, DC area at (202) 512–1530.

Note: The official version of this document is the document published in the **Federal Register**. Free Internet access to the official edition of the **Federal Register** and the Code of Federal Regulations is available on GPO Access at: *http://www.gpoaccess.gov/nara/index.html.*

Program Authority: 20 U.S.C. 1087 *et seq.*

Dated: May 12, 2004.

Theresa S. Shaw,

Chief Operating Officer, Federal Student Aid.

Attachment—Examples of the Calculations of Monthly Repayment Amounts

Example 1. This example assumes you are a single borrower with $15,000 in Direct Loans, the interest rate being charged is 8.25 percent, and you have an adjusted gross income (AGI) of $33,526. (The 8.25 percent interest rate used in this example is the maximum interest rate that may be charged for all Direct Loans excluding Direct PLUS Loans and certain Direct PLUS Consolidation Loans; your actual interest rate may be lower.)

Step 1: Determine your annual payments based on what you would pay over 12 years using standard amortization. To do this, multiply your loan balance by the constant multiplier for 8.25 percent interest (0.131545). The constant multiplier is a factor used to calculate amortized payments at a given interest rate over a fixed period of time. You can view the constant multiplier chart at the end of this notice to determine the constant multiplier that you should use for the interest rate on your loan. If your exact interest rate is not listed, use the next highest rate for estimation purposes.

- 0.131545 × $15,000 = $1,973.18

Step 2: Multiply the result of Step 1 by the income percentage factor shown in the income percentage factors table that corresponds to your income and then divide the result by 100 (if your income is not listed in the income percentage factors table, calculate the applicable income percentage factor by following the instructions under the ''Interpolation'' heading later in this notice):

- 88.77 × $1,973.18 100 = $1,751.59

Step 3: Determine 20 percent of your discretionary income (your discretionary income is your AGI minus the HHS Poverty Guideline amount for your family size). Because you are a single borrower, subtract the poverty level for a family of one, as published in the **Federal Register** on February 13, 2004 (69 FR 7335), from your AGI and multiply the result by 20 percent:

- $33,526 — $9,310 = $24,216
- $24,216 × 0.20 = $4,843.20

Step 4: Compare the amount from Step 2 with the amount from Step 3. The lower of the two will be your annual payment amount. In this example, you will be paying the amount calculated under Step 2. To determine your monthly repayment amount, divide the annual amount by 12.

- $1,751.59 12 = $145.97

Example 2. In this example, you are married. You and your spouse have a combined AGI of $63,354 and are repaying your loans jointly under the ICR plan. You have no children. You have a Direct Loan balance of $10,000, and your spouse has a Direct Loan balance of $15,000. Your interest rate is 8.25 percent. (The 8.25 percent interest rate used in this example is the maximum interest rate that may be charged for all Direct Loans excluding Direct PLUS Loans and certain Direct PLUS Consolidation Loans; your actual interest rate may be lower.)

Step 1: Add your and your spouse's Direct Loan balances together to determine your aggregate loan balance:

- $10,000 + $15,000 = $25,000

Step 2: Determine the annual payment based on what you would pay over 12 years using standard amortization. To do this, multiply your aggregate loan balance by the constant multiplier for 8.25 percent interest (0.131545). You can view the constant multiplier chart at the end of this notice to determine the constant multiplier that you should use for the interest rate on your loan. If your exact interest rate is not listed, use the next highest rate for estimation purposes.

- 0.131545 × $25,000 = $3,288.63

Step 3: Multiply the result of Step 2 by the income percentage factor shown in the income percentage factors table that corresponds to your and your spouse's income and then divide the result by 100 (if your and your spouse's aggregate income is not listed in the income percentage factors table, calculate the applicable income percentage factor by following the instructions under the ''Interpolation'' heading later in this notice):

- 109.40 × $3,288.63 100 = $3,597.76

Step 4: Determine 20 percent of your discretionary income. To do this, subtract the poverty level for a family of two, as published in the **Federal Register** on February 13, 2004 (69 FR 7335), from your combined AGI and multiply the result by 20 percent:

- $63,354 − $12,490 = $50,864
- $50,864 × 0.20 = $10,172.80

Step 5: Compare the amount from Step 3 with the amount from Step 4. The lower of the two will be your annual payment amount. You and your spouse will pay the amount calculated under Step 3. To determine your monthly repayment amount, divide the annual amount by 12.

- $3,597.76 12 = $299.81

Interpolation: If your income does not appear on the income percentage factors table, you will have to calculate the income percentage factor through interpolation. For example, assume you are single and your income is $25,000.

Step 1: Find the closest income listed that is less than your income of $25,000 and the closest income listed that is greater than your income of $25,000.

Step 2: Subtract the lower amount from the higher amount (for this discussion, we will call the result the ''income interval''):

- $26,691 − $22,432 = $4,259

Step 3: Determine the difference between the two income percentage factors that are given for these incomes (for this discussion, we will call the result the ''income percentage factor interval''):

- 80.33% − 71.89% = 8.44%

Step 4: Subtract from your income the closest income shown on the chart that is less than your income of $25,000:

- $25,000 − $22,432 = $2,568

Step 5: Divide the result of Step 4 by the income interval determined in Step 2:

- $2,568 ÷ $4,259 = 0.6030

Step 6: Multiply the result of Step 5 by the income percentage factor interval:

- 8.44% × 0.6030 = 5.0893%

Step 7: Add the result of Step 6 to the lower of the two income percentage factors used in Step 3 to calculate the income percentage factor interval for $25,000 in income:

- 5.0893% + 71.89% = 76.98% (rounded to the nearest hundredth)

The result is the income percentage factor that will be used to calculate the monthly repayment amount under the ICR plan.

2004 Income Percentage Factors (Based on Annual Income)			
Single		Married/ Head of Household	
Income	% Factor	Income	% Factor
8,764	55.00%	8,764	50.52%
12,059	57.79%	13,829	56.68%
15,517	60.57%	16,481	59.56%
19,054	66.23%	21,545	67.79%
22,432	71.89%	26,691	75.22%
26,691	80.33%	33,526	87.61%
33,526	88.77%	42,046	100.00%
42,047	100.00%	50,570	100.00%
50,570	100.00%	63,354	109.40%
60,779	111.80%	84,657	125.00%
77,825	123.50%	114,484	140.60%
110,224	141.20%	160,111	150.00%
126,383	150.00%	261,633	200.00%
225,110	200.00%		

Constant Multiplier Chart for 12-Year Amortization	
Interest Rate	Annual Constant Multiplier
3.22%	0.100578
3.42%	0.101717
4.22%	0.106350
7.00%	0.123406
7.25%	0.125011
7.50%	0.126627
7.75%	0.128255
8.00%	0.129894
8.25%	0.131545
8.50%	0.133207
8.75%	0.134880
9.00%	0.136564

Sample First-Year Monthly Repayment Amounts for a Single Borrower at Various Income and Debt Levels

Income	Initial Debt																						
	$2,500	$5,000	$7,500	$10,000	$12,500	$15,000	$17,500	$20,000	$22,500	$25,000	$30,000	$35,000	$40,000	$45,000	$50,000	$55,000	$60,000	$65,000	$70,000	$75,000	$80,000	$90,000	$100,000
$ 1,000	0	0	0	0	0	0	0	0	0	0	0	0	0	0	0	0	0	0	0	0	0	0	0
2,000	0	0	0	0	0	0	0	0	0	0	0	0	0	0	0	0	0	0	0	0	0	0	0
3,000	0	0	0	0	0	0	0	0	0	0	0	0	0	0	0	0	0	0	0	0	0	0	0
4,000	0	0	0	0	0	0	0	0	0	0	0	0	0	0	0	0	0	0	0	0	0	0	0
5,000	0	0	0	0	0	0	0	0	0	0	0	0	0	0	0	0	0	0	0	0	0	0	0
6,000	0	0	0	0	0	0	0	0	0	0	0	0	0	0	0	0	0	0	0	0	0	0	0
7,000	0	0	0	0	0	0	0	0	0	0	0	0	0	0	0	0	0	0	0	0	0	0	0
8,000	0	0	0	0	0	0	0	0	0	0	0	0	0	0	0	0	0	0	0	0	0	0	0
9,000	0	0	0	0	0	0	0	0	0	0	0	0	0	0	0	0	0	0	0	0	0	0	0
10,000	12	12	12	12	12	12	12	12	12	12	12	12	12	12	12	12	12	12	12	12	12	12	12
12,500	16	32	48	53	53	53	53	53	53	53	53	53	53	53	53	53	53	53	53	53	53	53	53
15,000	17	33	49	66	82	95	95	95	95	95	95	95	95	95	95	95	95	95	95	95	95	95	95
17,500	17	35	52	70	87	105	122	137	137	137	137	137	137	137	137	137	137	137	137	137	137	137	137
20,000	19	37	56	74	93	112	130	149	167	178	178	178	178	178	178	178	178	178	178	178	178	178	178
22,500	20	39	59	79	99	118	138	158	178	197	220	220	220	220	220	220	220	220	220	220	220	220	220
25,000	21	42	63	84	105	127	148	169	190	211	253	262	262	262	262	262	262	262	262	262	262	262	262
30,000	23	46	69	93	116	139	162	185	208	231	278	324	345	345	345	345	345	345	345	345	345	345	345
35,000	25	50	75	99	124	149	174	199	224	249	298	348	398	428	428	428	428	428	428	428	428	428	428
40,000	27	53	80	107	133	160	187	213	240	267	320	373	427	480	512	512	512	512	512	512	512	512	512
45,000	27	55	82	110	137	164	192	219	247	274	329	384	438	493	548	595	595	595	595	595	595	595	595
50,000	27	55	82	110	137	164	192	219	247	274	329	384	438	493	548	603	658	678	678	678	678	678	678
55,000	29	58	86	115	144	173	202	230	259	288	346	403	461	519	576	634	691	749	762	762	762	762	762
60,000	30	61	91	122	152	182	213	243	274	304	365	425	486	547	608	669	729	790	845	845	845	845	845
65,000	31	63	94	126	157	189	20	251	283	314	377	440	503	566	629	692	754	817	880	928	928	928	928
70,000	32	65	97	129	162	194	227	259	291	324	388	453	518	583	647	712	777	842	906	971	1012	1012	1012
75,000	33	67	100	133	167	200	233	267	300	333	400	466	533	600	666	733	800	866	933	999	1066	1095	1095
80,000	34	68	103	137	171	205	239	273	308	342	410	478	547	615	683	752	820	888	957	1025	1093	1178	1178
90,000	36	71	107	143	178	214	250	285	321	357	428	499	571	642	713	785	856	927	999	1070	1141	1286	1345
100,000	37	74	112	149	186	223	260	297	334	372	446	520	595	669	743	818	892	966	1041	1115	1189	1338	1487

Sample repayment amounts are based on an interest rate of 8.25%.

Sample First-Year Monthly Repayment Amounts for a Married or Head-of-Household Borrower at Various Income and Debt Levels

Income	Family Size = 3																						
	Initial Debt																						
	$2,500	$5,000	$7,500	$10,000	$12,500	$15,000	$17,500	$20,000	$22,500	$25,000	$30,000	$35,000	$40,000	$45,000	$50,000	$55,000	$60,000	$65,000	$70,000	$75,000	$80,000	$90,000	$100,000
$ 1,000	0	0	0	0	0	0	0	0	0	0	0	0	0	0	0	0	0	0	0	0	0	0	0
2,000	0	0	0	0	0	0	0	0	0	0	0	0	0	0	0	0	0	0	0	0	0	0	0
3,000	0	0	0	0	0	0	0	0	0	0	0	0	0	0	0	0	0	0	0	0	0	0	0
4,000	0	0	0	0	0	0	0	0	0	0	0	0	0	0	0	0	0	0	0	0	0	0	0
5,000	0	0	0	0	0	0	0	0	0	0	0	0	0	0	0	0	0	0	0	0	0	0	0
6,000	0	0	0	0	0	0	0	0	0	0	0	0	0	0	0	0	0	0	0	0	0	0	0
7,000	0	0	0	0	0	0	0	0	0	0	0	0	0	0	0	0	0	0	0	0	0	0	0
8,000	0	0	0	0	0	0	0	0	0	0	0	0	0	0	0	0	0	0	0	0	0	0	0
9,000	0	0	0	0	0	0	0	0	0	0	0	0	0	0	0	0	0	0	0	0	0	0	0
10,000	0	0	0	0	0	0	0	0	0	0	0	0	0	0	0	0	0	0	0	0	0	0	0
12,500	0	0	0	0	0	0	0	0	0	0	0	0	0	0	0	0	0	0	0	0	0	0	0
15,000	0	0	0	0	0	0	0	0	0	0	0	0	0	0	0	0	0	0	0	0	0	0	0
17,500	17	31	31	31	31	31	31	31	31	31	31	31	31	31	31	31	31	31	31	31	31	31	31
20,000	18	36	54	72	72	72	72	72	72	72	72	72	72	72	72	72	72	72	72	72	72	72	72
22,500	19	38	57	76	95	114	114	114	114	114	114	114	114	114	114	114	114	114	114	114	114	114	114
25,000	20	40	60	80	100	120	140	156	156	156	156	156	156	156	156	156	156	156	156	156	156	156	156
30,000	22	45	67	89	111	134	156	178	200	223	239	239	239	239	239	239	239	239	239	239	239	239	239
35,000	25	49	74	98	123	148	172	197	221	246	295	322	322	322	322	322	322	322	322	322	322	322	322
40,000	27	53	80	106	133	160	186	213	239	266	319	372	406	406	406	406	406	406	406	406	406	406	406
45,000	27	55	82	110	137	164	192	219	247	274	329	384	438	489	489	489	489	489	489	489	489	489	489
50,000	27	55	82	110	137	164	192	219	247	274	329	384	438	493	548	572	572	572	572	572	572	572	572
55,000	28	27	85	113	141	170	198	226	255	283	340	396	453	509	566	623	656	656	656	656	656	656	656
60,000	29	59	88	117	147	176	205	234	264	293	352	410	469	528	586	645	703	739	739	739	739	739	739
65,000	30	61	91	121	152	182	212	242	173	303	364	424	485	546	606	687	727	788	822	822	822	822	822
70,000	31	63	94	125	157	188	219	251	282	313	376	438	501	564	626	689	752	814	877	906	906	906	906
75,000	32	65	97	129	162	194	226	259	291	323	388	452	517	582	646	711	776	840	905	970	989	989	989
80,000	33	67	100	133	167	200	233	267	300	333	400	467	533	600	666	733	800	866	933	1000	1066	1072	1072
90,000	35	70	105	140	175	210	245	280	315	356	420	490	560	630	700	770	841	911	981	1051	1121	1239	1239
100,000	36	73	109	146	182	219	255	292	328	365	437	510	583	656	729	802	875	948	1021	1094	1167	1312	1406

Sample repayment amounts are based on an interest rate of 8.25%.

[FR Doc. 04–11139 Filed 5–14–04; 8:45 am]

BILLING CODE 4000–01–P

DEPARTMENT OF ENERGY

Environmental Management Site-Specific Advisory Board, Rocky Flats

AGENCY: Department of Energy.

ACTION: Notice of open meeting.

SUMMARY: This notice announces a meeting of the Environmental Management Site-Specific Advisory Board (EM SSAB), Rocky Flats. The Federal Advisory Committee Act (Pub. L. 92–463, 86 Stat. 770) requires that public notice of these meetings be announced in the **Federal Register**.

DATES: Thursday, June 3, 2004, 6 p.m. to 9 p.m.

ADDRESSES: College Hill Library, Room L268, Front Range Community College, 3705 West 112th Avenue, Westminster, CO.

FOR FURTHER INFORMATION CONTACT: Ken Korkia, Board/Staff Coordinator, Rocky Flats Citizens Advisory Board (RFCAB), 10808 Highway 93, Unit B, Building 60, Room 107B, Golden, CO 80403; telephone (303) 966–7855; fax (303) 966–7856.

SUPPLEMENTARY INFORMATION: *Purpose of the Board:* The purpose of the Board is to make recommendations to DOE in the areas of environmental restoration, waste management, and related activities.

Tentative Agenda:

1. Board Discussion and Approval of a Recommendation on the Pond Management and Land Configuration Environmental Assessment.
2. Board Education Session on Buffer Zone and Industrial Area Soil Sampling.
3. Other Board business may be conducted as necessary.

Public Participation: The meeting is open to the public. Written statements may be filed with the Board either before or after the meeting. Individuals who wish to make oral statements pertaining to agenda items should contact Ken Korkia at the address or telephone number listed above. Requests must be received at least five days prior to the meeting and reasonable provisions will be made to include the presentation in the agenda. The Deputy Designated Federal Officer is empowered to conduct the meeting in a fashion that will facilitate the orderly conduct of business. Each individual wishing to make public comment will be provided a maximum of five minutes to present their comments.

Minutes: The minutes of this meeting will be available for public review and copying at the office of the Rocky Flats Citizens Advisory Board, 10808 Highway 93, Unit B, Building 60, Room 107B, Golden, CO 80403; telephone (303) 966–7855. Hours of operations are 7:30 a.m. to 4 p.m., Monday through Friday. Minutes will also be made available by writing or calling Ken Korkia at the address or telephone number listed above. Board meeting minutes are posted on RFCAB's Web site within one month following each meeting at: *http://www.rfcab.org/Minutes.HTML.*

Issued at Washington, DC on May 12, 2004.

Rachel M. Samuel,

Deputy Advisory Committee Management Officer.

[FR Doc. 04–11105 Filed 5–14–04; 8:45 am]

BILLING CODE 6450–01–P

DEPARTMENT OF ENERGY

Office of Fossil Energy; National Petroleum Council; Notice of Open Meeting

AGENCY: Department of Energy.

ACTION: Notice of open meeting.

SUMMARY: This notice announces a meeting of the National Petroleum Council. Federal Advisory Committee Act (Pub. L. 92–463, 86 Stat. 770) requires that notice of these meetings be announced in the **Federal Register**.

DATES: Tuesday, June 22, 2004 9 a.m.–12 Noon.

ADDRESSES: St. Regis Hotel, 923 16th Street, NW., Washington, DC 20006.

FOR FURTHER INFORMATION CONTACT: James Slutz, U.S.Department of Energy, Office of Fossil Energy, Washington, DC 20585. Phone: 202–586–5600.

SUPPLEMENTARY INFORMATION: *Purpose of the Committee:* To provide advice, information, and recommendations to the Secretary of Energy on matters relating to oil and gas or the oil and gas industry.

Tentative Agenda:

- Call to Order and Introductory Remarks.
- Remarks by the Honorable E. Spencer Abraham, Secretary of Energy.
- Administrative Matters.
- Discussion of Any Other Business Properly Brought Before the National Petroleum Council.
- Adjourn.

Public Participation: The meeting is open to the public. The chairperson of the Council is empowered to conduct the meeting in a fashion that will facilitate the orderly conduct of business. Any member of the public who wishes to file a written statement to the Council will be permitted to do so, either before or after the meeting. Members of the public who wish to make oral statements pertaining to agenda items should contact James Slutz at the address or telephone number listed above. Request must be received at least five days prior to the meeting and reasonable provisions will be made to include the presentation on the agenda.

Transcripts: Available for public review and copying at the Public Reading Room, Room 1E–190, Forrestal Building, 1000 Independence Avenue, SW., Washington, DC, between 9 am and 4 pm, Monday through Friday, except federal holidays.

Issued at Washington, DC, on May 12, 2004.

Rachel M. Samuel,

Deputy Advisory Committee, Management Officer.

[FR Doc. 04–11104 Filed 5–14–04; 8:45 am]

BILLING CODE 6450–01–P

DEPARTMENT OF ENERGY

[FE Docket Nos. 04–41–NG, 04–04–LNG, 04–43–NG, 04–42–LNG, 04–44–NG]

Office of Fossil Energy; OGE Energy Resources, Inc., Excelerate Energy L.P., Northwest Natural Gas Company, Shell NA LNG LLC, NJR Energy Services Company; Orders Granting Authority to Import and Export Natural Gas, Including Liquefied Natural Gas

AGENCY: Office of Fossil Energy, DOE.

ACTION: Notice of orders.

SUMMARY: The Office of Fossil Energy (FE) of the Department of Energy gives notice that during March 2004, it issued Orders granting authority to import and export natural gas, including liquefied natural gas. These Orders are summarized in the attached appendix and may be found on the FE Web site at *http://www.fe.doe.gov* (select gas regulation). They are also available for inspection and copying in the Office of Natural Gas & Petroleum Import & Export Activities, Docket Room 3E–033, Forrestal Building, 1000 Independence Avenue, SW., Washington, DC 20585, (202) 586–9478. The Docket Room is open between the hours of 8 a.m. and 4:30 p.m., Monday through Friday, except Federal holidays.

Issued in Washington, DC, on May 7, 2004.

Sally Kornfeld,

Manager, Natural Gas Regulation, Office of Natural Gas & Petroleum, Import & Export Activities, Office of Fossil Energy.

APPENDIX—ORDERS GRANTING, TRANSFERRING, AND VACATING IMPORT/EXPORT AUTHORIZATIONS

[DOE/FE authority]

Order No.	Date issued	Importer/exporter FE docket No.	Import volume	Export volume	Comments
1972	4–9–04	OGE Energy Resources, Inc. 04–41–NG.	400 Bcf		Import and export a combined total of natural gas from and to Canada, beginning on May 1, 2004, and continuing through April 30, 2006.
1939	4–9–04	Excelerate Energy L.P. 04–04–LNG.			Errata Notice: Language change to LNG may be imported at any receiving facility in the United States or its territories.
1973	4–16–04	Northwest Natural Gas Company 04–43–NG.	300 Bcf		Import and export a combined total of natural gas from and to Canada, beginning on May 1, 2004, and continuing through April 30, 2006.
1978	4–16–04	Shell NA LNG LLC 04–42–LNG.	800 Bcf		Import liquefied natural gas from various sources beginning on April 29, 2004 and extending through April 28, 2006.
1976	4–19–04	NJR Energy Services Company 04–44–NG.	200 Bcf		Import and export a combined total of natural gas from and to Canada, beginning on April 19, 2004, and continuing through April 18, 2006.

[FR Doc. 04–11103 Filed 5–14–04; 8:45 am]

BILLING CODE 6450–01–P

DEPARTMENT OF ENERGY

Energy Information Administration

Agency Information Collection Activities: Proposed Collection; Comment Request

AGENCY: Energy Information Administration (EIA), Department of Energy (DOE).

ACTION: Agency information collection activities: proposed collection; comment request.

SUMMARY: The EIA is soliciting comments on the proposed revision and three-year extension to the Form EIA–886, ''Annual Survey of Alternative Fueled Vehicle Suppliers and Users.''

DATES: Comments must be filed by July 16, 2004. If you anticipate difficulty in submitting comments within that period, contact the person listed below as soon as possible.

ADDRESSES: Send comments to Mary Joyce. To ensure receipt of the comments by the due date, submission by fax (202–287–1944) or e-mail (*mary.joyce@eia.doe.gov*) is recommended. The mailing address is Energy Information Administration, EI–52, Forrestal Building, U.S. Department of Energy, Washington, DC 20585. Alternatively, Mary Joyce may be contacted by telephone at (202) 287–1752.

FOR FURTHER INFORMATION CONTACT: Requests for additional information or copies of any forms and instructions should be directed to Mary Joyce at the address listed above.

SUPPLEMENTARY INFORMATION:

I. Background
II. Current Actions
III. Request for Comments

I. Background

The Federal Energy Administration Act of 1974 (Pub. L. 93–275, 15 U.S.C. 761 *et seq.*) and the DOE Organization Act (Pub. L. 95–91, 42 U.S.C. 7101 *et seq.*) require the EIA to carry out a centralized, comprehensive, and unified energy information program. This program collects, evaluates, assembles, analyzes, and disseminates information on energy resource reserves, production, demand, technology, and related economic and statistical information. This information is used to assess the adequacy of energy resources to meet near and longer term domestic demands.

The EIA, as part of its effort to comply with the Paperwork Reduction Act of 1995 (Pub. L. 104–13, 44 U.S.C. chapter 35), provides the general public and other Federal agencies with opportunities to comment on collections of energy information conducted by or in conjunction with the EIA. Any comments received help the EIA to prepare data requests that maximize the utility of the information collected, and to assess the impact of collection requirements on the public. Also, the EIA will later seek approval by the Office of Management and Budget (OMB) under section 3507(a) of the Paperwork Reduction Act of 1995.

Form EIA–886, the Annual Survey of Alternative Fueled Vehicle Suppliers and Users, is an annual survey that collects information on:

1.The number and type of alternative fueled vehicles (AFVs) that vehicle suppliers made available in the previous calendar year and plan to make available in the following calendar year;

2.The number, type and geographic distribution of AFVs in use in the previous calendar year; and

3.The amount and distribution of each type of alternative transportation fuel (ATF) consumed in the previous calendar year.

The EIA–886 data are collected from suppliers and users of AFVs. The objectives of the EIA–886 survey are to:

1. Comply with section 503 of the Energy Policy Act of 1992 (EPACT) that requires the EIA to collect information and provide estimates related to alternative fueled vehicles, alternate transportation fuels, and replacement fuels;

2. Satisfy public requests for information on AFVs and ATFs;

3. Provide Congress with a measure of the extent to which the objectives of EPACT are being achieved; and

4. Provide EIA with a basis for estimating and forecasting total AFV and ATF use in the U.S.

The results of the EIA–886 are released annually on EIA's Web site at *http://www.eia.doe.gov/fuelalternate.html.*

II. Current Actions

EIA will be requesting a three-year extension of approval to its alternative fuel survey with the following survey changes.

1. Suppliers of AFVs, who report on section 3 of the form, will be requested to report the State where the AFV's were delivered or sold.

2. Users of AFVs, who report on section 2, will be requested to categorize alternative fuel consumption by fuel type, State, vehicle type, primary application, and engine configuration. Previously, they were requested to report alternative fuel consumption by fuel type and State only.

3. Users of AFVs will also be requested to report data on vehicle miles traveled by their AFVs. Vehicle miles traveled should be categorized in the same way as consumption, *i.e.*, by fuel type, State, vehicle type, primary application, and engine configuration.

4. Users of AFVs will be requested to report data on retirements of AFVs. These data will include vehicle and fuel type as well as number, average age, and disposition of retired vehicles.

5. Instructions will be rewritten to clarify that users of AFVs should not report hybrid electric vehicles unless their primary fuel is an alternative fuel, or consumption of biodiesel unless it is consumed as 100-percent biodiesel. Suppliers of AFVs will continue to report hybrid vehicles.

6. Federal agencies are no longer required to complete the survey because EIA's data collection efforts for Federal AFVs has been merged with the DOE/GSA's Federal Automotive Statistical Tool, an on-line tracking system for Executive Order 13149 and several EPACT requirements.

The additional data will enable EIA to more accurately determine the location of AFVs and other advanced transportation vehicles in use in the U.S. They will also enable EIA to more accurately estimate total AFVs in use and total alternative fuel consumption in the U.S. EIA will also be able to satisfy customer requests for data about AFV miles traveled and AFV retirements.

III. Request for Comments

Prospective respondents and other interested parties should comment on the actions discussed in item II. The following guidelines are provided to assist in the preparation of comments. Please indicate to which section of the form (section 1, 2 or 3) your comments apply.

General Issues

A. Is the proposed collection of information necessary for the proper performance of the functions of the agency and does the information have practical utility? Practical utility is defined as the actual usefulness of information to or for an agency, taking into account its accuracy, adequacy, reliability, timeliness, and the agency's ability to process the information it collects.

B. What enhancements can be made to the quality, utility, and clarity of the information to be collected?

As a Potential Respondent to the Request for Information

A. What actions could be taken to help ensure and maximize the quality, objectivity, utility, and integrity of the information to be collected?

B. Are the instructions and definitions clear and sufficient? If not, which instructions need clarification?

C. Can the information be submitted by the due date?

D. Public reporting burden for this collection is estimated to average 4.4 hours per response. The estimated burden includes the total time necessary to provide the requested information. In your opinion, how accurate is this estimate?

E. The agency estimates that the only cost to a respondent is for the time it will take to complete the collection. Will a respondent incur any start-up costs for reporting, or any recurring annual costs for operation, maintenance, and purchase of services associated with the information collection?

F. What additional actions could be taken to minimize the burden of this collection of information? Such actions may involve the use of automated, electronic, mechanical, or other technological collection techniques or other forms of information technology.

G. Does any other Federal, State, or local agency collect similar information? If so, specify the agency, the data element(s), and the methods of collection.

As a Potential User of the Information To Be Collected

A. What actions could be taken to help ensure and maximize the quality, objectivity, utility, and integrity of the information disseminated?

B. Is the information useful at the levels of detail to be collected?

C. For what purpose(s) would the information be used? Be specific.

D. Are there alternate sources for the information and are they useful? If so, what are their weaknesses and/or strengths?

Comments submitted in response to this notice will be summarized and/or included in the request for OMB approval of the form. They also will become a matter of public record.

Statutory Authority: Section 3507(h)(1) of the Paperwork Reduction Act of 1995 (Pub. L. 104–13, 44 U.S.C. chapter 35).

Issued in Washington, DC, May 11, 2004.

Jay H. Casselberry,

Agency Clearance Officer, Statistics and Methods Group, Energy Information Administration.

[FR Doc. 04–11106 Filed 5–14–04; 8:45 am]

BILLING CODE 6450–01–P

DEPARTMENT OF ENERGY

Federal Energy Regulatory Commission

[Docket Nos. RP00–331–007, RP01–23–009, and RP03–176–005]

Algonquin Gas Transmission Company; Notice of Compliance Filing

May 11, 2004.

Take notice that on May 6, 2004, Algonquin Gas Transmission Company (Algonquin) tendered for filing as part of its FERC Gas Tariff, Fourth Revised Volume No. 1, the following revised tariff sheets to be effective May 1, 2004:

Third Sub Second Revised Sheet No. 673
Third Sub Second Revised Sheet No. 675

Algonquin states that the purpose of this filing is to clarify the effective date for the changes to the cashout mechanism in section 25.10 of the General Terms and Conditions included in the compliance filing submitted on April 12, 2004, in the captioned dockets.

Algonquin states that copies of its filing have been mailed to all affected customers and interested state commissions, as well as to all parties on the official service lists compiled by the Secretary of the Commission in these proceedings.

Any person desiring to protest said filing should file a protest with the Federal Energy Regulatory Commission, 888 First Street, NE., Washington, DC 20426, in accordance with section 385.211 of the Commission's rules and regulations. All such protests must be filed in accordance with section 154.210 of the Commission's regulations. Protests will be considered by the Commission in determining the appropriate action to be taken, but will not serve to make protestants parties to the proceedings. This filing is available for review at the Commission in the Public Reference Room or may be viewed on the Commission's Web site at *http://www.ferc.gov* using the eLibrary link. Enter the docket number excluding the last three digits in the docket number field to access the document. For assistance, please contact FERC Online Support at *FERCOnlineSupport@ferc.gov* or toll-free at (866) 208–3676, or TTY, contact (202) 502–8659. The Commission strongly encourages electronic filings. *See* 18 CFR 385.2001(a)(1)(iii) and the instructions on the Commission's Web site under the e-Filing link.

Linda Mitry,

Acting Secretary.

[FR Doc. E4–1165 Filed 5–14–04; 8:45 am]

BILLING CODE 6717–01–P

DEPARTMENT OF ENERGY

Federal Energy Regulatory Commission

[Docket No. RP04–202–001]

Columbia Gas Transmission Corporation; Notice of Compliance Filing

May 11, 2004.

Take notice that on April 15, 2003, Columbia Gas Transmission Corporation (Columbia Gas) made its filing in compliance with the Commission's order issued March 31, 2004, in this proceeding (*See* Columbia Gas Transmission Corp., 106 FERC ¶ 61,334 (2004) (March 31 Order)). In this filing, Columbia states that it is submitting the information requested by the March 31 Order.

Any person desiring to protest said filing should file a protest with the Federal Energy Regulatory Commission, 888 First Street, NE., Washington, DC 20426, in accordance with Section 385.211 of the Commission's Rules and Regulations. All such protests must be filed in accordance with Section 154.210 of the Commission's Regulations. Protests will be considered by the Commission in determining the appropriate action to be taken, but will not serve to make protestants parties to the proceedings. This filing is available for review at the Commission in the Public Reference Room or may be viewed on the Commission's Web site at *http://www.ferc.gov* using the eLibrary link. Enter the docket number excluding the last three digits in the docket number field to access the document. For assistance, please contact FERC Online Support at *FERCOnlineSupport@ferc.gov* or toll-free at (866) 208–3676, or TTY, contact (202) 502–8659. The Commission strongly encourages electronic filings. *See,* 18 CFR 385.2001(a)(1)(iii) and the instructions on the Commission's Web site under the e-Filing link.

Linda Mitry,

Acting Secretary.

[FR Doc. E4–1167 Filed 5–14–04; 8:45 am]

BILLING CODE 6717–01–P

DEPARTMENT OF ENERGY

Federal Energy Regulatory Commission

[Docket No. RP96–383–056]

Dominion Transmission, Inc.; Notice of Negotiated Rate Filing

May 11, 2004.

Take notice that on May 6, 2004, Dominion Transmission Inc. (DTI) tendered for filing as part of its FERC Gas Tariff, Third Revised Volume No. 1, Fifth Revised Sheet No. 1402, with an effective date of April 1, 2004, to correctly reflect the terms of an existing negotiated transaction with Rochester Gas and Electric Corporation (RG&E).

DTI states that the purpose of this filing is to amend its filing of April 30, 2004, in which DTI proposed to clarify an inconsistency to accurately reflect the on-going, year-to-year term of its negotiated rate agreement with RG&E, to include the clean copy of the revised tariff sheet that was inadvertently omitted from the original filing.

DTI states that copies of its letter of transmittal and enclosures have been served upon DTI's customers and interested state commissions.

Any person desiring to be heard or to protest said filing should file a motion to intervene or a protest with the Federal Energy Regulatory Commission, 888 First Street, NE., Washington, DC 20426, in accordance with Sections 385.214 or 385.211 of the Commission's Rules and Regulations. All such motions or protests must be filed in accordance with Section 154.210 of the Commission's Regulations. Protests will be considered by the Commission in determining the appropriate action to be taken, but will not serve to make protestants parties to the proceedings. Any person wishing to become a party must file a motion to intervene. This filing is available for review at the Commission in the Public Reference Room or may be viewed on the Commission's Web site at *http://www.ferc.gov* using the eLibrary. Enter the docket number excluding the last three digits in the docket number field to access the document. For assistance, please contact FERC Online Support at *FERCOnlineSupport@ferc.gov* or toll-free at (866) 208–3676, or TTY, contact (202) 502–8659. The Commission strongly encourages electronic filings. *See,* 18 CFR 385.2001(a)(1)(iii) and the instructions on the Commission's web site under the e-Filing link.

Linda Mitry,

Acting Secretary.

[FR Doc. E4–1163 Filed 5–14–04; 8:45 am]

BILLING CODE 6717–01–P

DEPARTMENT OF ENERGY

Federal Energy Regulatory Commission

[Docket No. RP04–296–000]

Iroquois Gas Transmission System, L.P.; Notice of Proposed Changes in FERC Gas Tariff

May 11, 2004.

Take notice that on May 7, 2004, Iroquois Gas Transmission System, L.P. (Iroquois) tendered for filing as part of its FERC Gas Tariff, First Revised Volume No. 1, Third Revised Sheet No. 157, with an effective date of June 6, 2004.

Iroquois periodically conducts reviews of its tariff to determine if there are errors, omissions or non-substantive corrective changes that should be made. Recently Iroquois discovered a minor typographical error in Sheet No. 157. In order to correct this error, Iroquois is submitting this revised Sheet No. 157.

Iroquois states that copies of its filing were served on all jurisdictional customers and interested state regulatory agencies and all parties to the proceeding.

Any person desiring to be heard or to protest said filing should file a motion to intervene or a protest with the Federal Energy Regulatory Commission, 888 First Street, NE., Washington, DC 20426, in accordance with sections 385.214 or 385.211 of the Commission's rules and regulations. All such motions or protests must be filed in accordance with section 154.210 of the Commission's regulations. Protests will be considered by the Commission in determining the appropriate action to be taken, but will not serve to make protestants parties to the proceedings. Any person wishing to become a party must file a motion to intervene. This filing is available for review at the Commission in the Public Reference Room or may be viewed on the Commission's Web site at *http://www.ferc.gov* using the eLibrary. Enter the docket number excluding the last three digits in the docket number field to access the document. For assistance, please contact FERC Online Support at *FERCOnlineSupport@ferc.gov* or toll-free at (866) 208–3676, or TTY, contact (202) 502–8659. The Commission

strongly encourages electronic filings. *See* 18 CFR 385.2001(a)(1)(iii) and the instructions on the Commission's Web site under the e-Filing link.

Linda Mitry,

Acting Secretary.

[FR Doc. E4–1171 Filed 5–14–04; 8:45 am]

BILLING CODE 6717–01–P

DEPARTMENT OF ENERGY

Federal Energy Regulatory Commission

[Docket No. RP04–297–000]

Iroquois Gas Transmission System, L.P.; Notice Of Proposed Changes In FERC Gas Tariff

May 11, 2004.

Take notice that on May 7, 2004, Iroquois Gas Transmission System, L.P. (Iroquois) tendered for filing as part of its FERC Gas Tariff, First Revised Volume No. 1, the following tariff sheets, to become effective June 6, 2004:

First Revised Sheet No. 4B
Fourth Revised Sheet No. 93A
Fifth Revised Sheet No. 94
Third Revised Sheet No. 97
Fourth Revised Sheet No. 105
Fifth Revised Sheet No. 106
Fourth Revised Sheet No. 162

Iroquois periodically conducts reviews of its tariff to determine if there are errors, omissions or non-substantive corrective changes that should be made. On September 1, 2000, Iroquois submitted and the Commission approved, tariff changes addressing a provision in Order No. 637 and 637–A (collectively the Orders) waiving the rate ceiling for short-term (less than one year) capacity release transactions between March 27, 2000 and September 1, 2002. The rate ceiling for short-term capacity release transactions has expired under the Orders and Iroquois desires to remove the outdated language referencing the waiver from its tariff. The tariff modifications proposed herein accomplish this task.

Iroquois states that copies of its filing were served on all jurisdictional customers and interested state regulatory agencies and all parties to the proceeding.

Any person desiring to be heard or to protest said filing should file a motion to intervene or a protest with the Federal Energy Regulatory Commission, 888 First Street, NE., Washington, DC 20426, in accordance with Sections 385.214 or 385.211 of the Commission's Rules and Regulations. All such motions or protests must be filed in accordance with Section 154.210 of the Commission's Regulations. Protests will be considered by the Commission in determining the appropriate action to be taken, but will not serve to make protestants parties to the proceedings. Any person wishing to become a party must file a motion to intervene. This filing is available for review at the Commission in the Public Reference Room or may be viewed on the Commission's Web site at *http://www.ferc.gov* using the eLibrary. Enter the docket number excluding the last three digits in the docket number field to access the document. For assistance, please contact FERC Online Support at *FERCOnlineSupport@ferc.gov* or toll-free at (866) 208–3676, or TTY, contact (202) 502–8659. The Commission strongly encourages electronic filings. *See,* 18 CFR 385.2001(a)(1)(iii) and the instructions on the Commission's web site under the e-Filing link.

Linda Mitry,

Acting Secretary.

[FR Doc. E4–1172 Filed 5–14–04; 8:45 am]

BILLING CODE 6717–01–P

DEPARTMENT OF ENERGY

Federal Energy Regulatory Commission

[Docket No. RP01–377–002]

Northern Border Pipeline Company; Notice of Negotiated Rate

May 11, 2004.

Take notice that on May 7, 2004, Northern Border Pipeline Company (Northern Border) tendered for filing to become part of its FERC Gas Tariff, First Revised Volume No. 1, Fourth Revised Sheet No. 99A , to become effective May 8, 2004.

Northern Border states that the purpose of this filing is to implement a negotiated rate agreement between Northern Border Pipeline Company and Peoples Energy Wholesale Marketing, LLC and to delete a negotiated rate between Northern Border and Peoples Energy Resources Corp.

Any person desiring to be heard or to protest said filing should file a motion to intervene or a protest with the Federal Energy Regulatory Commission, 888 First Street, NE., Washington, DC 20426, in accordance with Sections 385.214 or 385.211 of the Commission's rules and regulations. All such motions or protests must be filed in accordance with section 154.210 of the Commission's regulations. Protests will be considered by the Commission in determining the appropriate action to be taken, but will not serve to make protestants parties to the proceedings. Any person wishing to become a party must file a motion to intervene. This filing is available for review at the Commission in the Public Reference Room or may be viewed on the Commission's Web site at *http://www.ferc.gov* using the eLibrary. Enter the docket number excluding the last three digits in the docket number field to access the document. For assistance, please contact FERC Online Support at *FERCOnlineSupport@ferc.gov* or toll-free at (866) 208–3676, or TTY, contact (202) 502–8659. The Commission strongly encourages electronic filings. *See* 18 CFR 385.2001(a)(1)(iii) and the instructions on the Commission's Web site under the e-Filing link.

Linda Mitry,

Acting Secretary.

[FR Doc. E4–1166 Filed 5–14–04; 8:45 am]

BILLING CODE 6717–01–P

DEPARTMENT OF ENERGY

Federal Energy Regulatory Commission

[Docket No. RP04–232–001]

Transcontinental Gas Pipe Line Corporation; Notice of Compliance Filing

May 11, 2004.

Take notice that on May 7, 2004, Transcontinental Gas Pipe Line Corporation (Transco) tendered for filing as part of its FERC Gas Tariff, Third Revised Volume No. 1, Substitute First Revised Sheet No. 331 and Original Sheet No. 332, to be effective May 1, 2004.

Transco states that the purpose of this filing is to comply with the Commission's Order issued on April 30, 2004, in the referenced docket, in which the Commission directed Transco to file, within 10 days, revised tariff sheets to modify its provisions in section 22 (Policy for Consolidation of Service Agreements) of its General Terms and Conditions.

Transco states that copies of the filing are being mailed to parties included on the official service list in the referenced docket, interested State Commissions, and other interested parties.

Any person desiring to protest said filing should file a protest with the Federal Energy Regulatory Commission, 888 First Street, NE., Washington, DC 20426, in accordance with section 385.211 of the Commission's rules and regulations. All such protests must be filed in accordance with section 154.210 of the Commission's regulations.

Protests will be considered by the Commission in determining the appropriate action to be taken, but will not serve to make protestants parties to the proceedings. This filing is available for review at the Commission in the Public Reference Room or may be viewed on the Commission's Web site at *http://www.ferc.gov* using the eLibrary link. Enter the docket number excluding the last three digits in the docket number field to access the document. For assistance, please contact FERC Online Support at *FERCOnlineSupport@ferc.gov* or toll-free at (866) 208–3676, or TTY, contact (202) 502–8659. The Commission strongly encourages electronic filings. *See,* 18 CFR 385.2001(a)(1)(iii) and the instructions on the Commission's Web site under the e-Filing link.

Linda Mitry,

Acting Secretary.

[FR Doc. E4–1168 Filed 5–14–04; 8:45 am]

BILLING CODE 6717–01–P

DEPARTMENT OF ENERGY

Federal Energy Regulatory Commission

[Docket No. RP04–295–000]

Transcontinental Gas Pipe Line Corporation; Notice of Tariff Filing

May 11, 2004.

Take notice that on May 7, 2004, Transcontinental Gas Pipe Line Corporation (Transco) tendered for filing as part of its FERC Gas Tariff, Third Revised Volume No. 1, Fourth Revised Sheet No. 306, with a proposed effective date of April 1, 2004.

Transco states that the purpose of the instant filing is to update this Delivery Point Entitlement (DPE) tariff sheet in accordance with the provisions of section 19.1(f) and 19.2(f) of the General Terms and Conditions of Transco's Third Revised Volume No. 1 Tariff.

Transco states that copies of the filing are being mailed to its affected customers and interested State commissions.

Any person desiring to be heard or to protest said filing should file a motion to intervene or a protest with the Federal Energy Regulatory Commission, 888 First Street, NE., Washington, DC 20426, in accordance with sections 385.214 or 385.211 of the Commission's rules and regulations. All such motions or protests must be filed in accordance with section 154.210 of the Commission's regulations. Protests will be considered by the Commission in determining the appropriate action to be taken, but will not serve to make protestants parties to the proceedings. Any person wishing to become a party must file a motion to intervene. This filing is available for review at the Commission in the Public Reference Room or may be viewed on the Commission's Web site at *http://www.ferc.gov* using the eLibrary. Enter the docket number excluding the last three digits in the docket number field to access the document. For assistance, please contact FERC Online Support at *FERCOnlineSupport@ferc.gov* or toll-free at (866) 208–3676, or TTY, contact (202) 502–8659. The Commission strongly encourages electronic filings. *See,* 18 CFR 385.2001(a)(1)(iii) and the instructions on the Commission's Web site under the e-Filing link.

Linda Mitry,

Acting Secretary.

[FR Doc. E4–1170 Filed 5–14–04; 8:45 am]

BILLING CODE 6717–01–P

DEPARTMENT OF ENERGY

Federal Energy Regulatory Commission

[Docket No. RP04–294–000]

Trunkline Gas Company, LLC; Notice of Proposed Changes in FERC Gas Tariff

May 11, 2004.

Take notice that on May 7, 2004, Trunkline Gas Company, LLC (Trunkline) tendered for filing as part of its FERC Gas Tariff, Third Revised Volume No. 1, the revised tariff sheets listed in Appendix A attached to the filing to become effective June 7, 2004.

Trunkline states that this filing is being made to modify the transportation service agreements to clarify that shippers and Trunkline may enter into contracts with different levels of Maximum Daily Quantity (MDQ) for specified periods within the contract term.

Trunkline further states that copies of this filing are being served on all affected customers and applicable state regulatory agencies.

Any person desiring to be heard or to protest said filing should file a motion to intervene or a protest with the Federal Energy Regulatory Commission, 888 First Street, NE., Washington, DC 20426, in accordance with Sections 385.214 or 385.211 of the Commission's rules and regulations. All such motions or protests must be filed in accordance with section 154.210 of the Commission's regulations. Protests will be considered by the Commission in determining the appropriate action to be taken, but will not serve to make protestants parties to the proceedings. Any person wishing to become a party must file a motion to intervene. This filing is available for review at the Commission in the Public Reference Room or may be viewed on the Commission's Web site at *http://www.ferc.gov* using the eLibrary. Enter the docket number excluding the last three digits in the docket number field to access the document. For assistance, please contact FERC Online Support at *FERCOnlineSupport@ferc.gov* or toll-free at (866) 208–3676, or TTY, contact (202) 502–8659. The Commission strongly encourages electronic filings. *See,* 18 CFR 385.2001(a)(1)(iii) and the instructions on the Commission's Web site under the e-Filing link.

Linda Mitry,

Acting Secretary.

[FR Doc. E4–1169 Filed 5–14–04; 8:45 am]

BILLING CODE 6717–01–P

DEPARTMENT OF ENERGY

Federal Energy Regulatory Commission

[Docket No. EC04–103–000, et al.]

TECO Wholesale Generation, Inc., et al.; Electric Rate and Corporate Filings

May 7, 2004.

The following filings have been made with the Commission. The filings are listed in ascending order within each docket classification.

1. TECO Wholesale Generation, Inc.

[Docket No. EC04–103–000]

Take notice that on May 4, 2004, TECO Wholesale Generation, Inc. (TWG) filed with the Commission an application pursuant to section 203 of the Federal Power Act requesting authorization to engage in a corporate reorganization that will alter the intermediate upstream ownership of certain facilities subject to the Commission's jurisdiction. TWG states that the transaction will have no adverse effect on competition, rates or regulation.

Comment Date: May 26, 2004.

2. Tampa Electric Company

[Docket No. ER03–48–002]

Take notice that on April 30, 2004, Tampa Electric Company (Tampa Electric) tendered the following tariff sheets for inclusion in its open access transmission tariff (FERC Electric Tariff, Second Revised Volume No. 4):

Second Revised Sheet No. 76;

Second Revised Sheet No. 91;
Second Revised Sheet No. 92;
Second Revised Sheet No. 119.

Tampa Electric states that the tariff sheets contain revised rates under Schedules 1, 7, and 8 and Attachment H of the open access tariff that were approved as part of the settlement agreement in Docket No. ER03–48–000, and are submitted in compliance with that settlement agreement. Tampa Electric proposes that the tariff sheets be made effective on June 1, 2004.

Tampa Electric states that copies of the compliance filing have been served on the parties to the proceeding in Docket No. ER03–48–000, the customers under Tampa Electric's open access tariff, and the Florida Public Service Commission.

Comment Date: May 21, 2004.

3. New England Power Pool

[Docket No. ER04–781–000]

Take notice that on April 30, 2004, the New England Power Pool (NEPOOL) Participants Committee filed for acceptance materials to: (1) Permit NEPOOL to expand its membership to include J&L Electric (J&L) and New Jersey Machine Inc. (NJM); and (2) terminate the memberships of AllEnergy Marketing Company, LLC (AllEnergy), Reliant Energy Services, Inc. (Reliant), Readsboro Electric Department (Readsboro), and Village of Johnson, Vermont Electric Light Department (Johnson). The Participants Committee requests the following effective dates: April 1, 2004 for the termination of Reliant; and May 1, 2004 for commencement of participation in NEPOOL by J&L and NJM and the terminations of AllEnergy, Readsboro, and Johnson.

Participants Committee states that copies of these materials were sent to the New England state governors and regulatory commissions and the Participants in NEPOOL.

Comment Date: May 21, 2004.

4. Commonwealth Edison Company PJM Interconnection, LLC.

[Docket No. ER04–718–001]

Take notice that on April 30, 2004, Commonwealth Edison Company (ComEd) and PJM Interconnection, LLC. (PJM) submitted for filing an executed Service Agreement entered into between ComEd and PJM under PJM's Open Access Transmission Tariff (OATT). ComEd requests an effective date of May 1, 2004 for the Service Agreement.

ComEd states that copies of the filing were served upon persons on the service list in this docket.

Comment Date: May 21, 2004.

5. California Power Exchange Corporation

[Docket No. ER04–785–000]

Take notice that on April 30, 2004, the California Power Exchange Corporation (CalPX) tendered for filing its Rate Schedule for Rate Period 5, the period from July 1, 2004 through December 31, 2004. CalPX files this Rate Schedule pursuant to the Commission's Orders of August 8, 2002 (100 FERC ¶ 61,178) in Docket No. ER02–2234–000, and April 1, 2003 (103 FERC ¶ 61,001) issued in Docket Nos. EC03–20–000 and EC03–20–001, which require CalPX to make a new rate filing every six months to recover current expenses. CalPX states that the Rate Schedule therefore covers expenses projected for the period July 1, 2004 through December 31, 2004, and CalPX requests an effective date of July 1, 2004.

CalPX states that it has served copies of the filing on its participants, on the California ISO, and on the California Public Utilities Commission.

Comment Date: May 21, 2004.

6. Tampa Electric Company

[Docket No. ER04–786–000]

Take notice that on April 30, 2004, Tampa Electric Company (Tampa Electric) tendered for filing revised rate schedule sheets containing updated transmission service rates under its agreements to provide qualifying facility transmission service for Cargill Fertilizer, Inc. (Cargill) and Auburndale Power Partners, Limited Partnership (Auburndale). Tampa Electric proposes that the revised sheets containing the updated transmission service rates be made effective on May 1, 2004, and therefore requests waiver of the Commission's notice requirement.

Tampa Electric states that copies of the filing have been served on Cargill, Auburndale, and the Florida Public Service Commission.

Comment Date: May 21, 2004.

7. Tampa Electric Company

[Docket No. ER04–787–000]

Take notice that on April 30, 2004, Tampa Electric Company (Tampa Electric) tendered for filing revised rate schedule sheets containing updated caps on energy charges for emergency assistance service under its interchange service contract with Alabama Power Company, Georgia Power Company, Gulf Power Company, Mississippi Power Company, and Savannah Electric and Power Company, as represented by agent Southern Company Services, Inc. (collectively, Southern Companies). Tampa Electric requests that the revised rate schedule sheets be made effective on May 1, 2004, and therefore requests waiver of the Commission's notice requirement.

Tampa Electric states that a copy of the filing has been served upon Southern Companies and the Florida Public Service Commission.

Comment Date: May 21, 2004.

8. Tampa Electric Company

[Docket No. ER04–788–000]

Take notice that on April 30, 2004, Tampa Electric Company (Tampa Electric) tendered for filing an amended service agreement with Calpine Energy Services, LP (Calpine) for firm point-to-point transmission service under Tampa Electric's open access transmission tariff. Tampa Electric requests that the amended service agreement be made effective on June 1, 2004.

Tampa Electric states that copies of the filing have been served on Calpine and the Florida Public Service Commission.

Comment Date: May 21, 2004.

9. Wabash Valley Power Association, Inc.

[Docket No. ER04–789–000]

Take notice that on April 30, 2004, Wabash Valley Power Association, Inc. (Wabash Valley) tendered for filing its initial rate filing, consisting of a Formulary Rate Tariff for service to each of its Member cooperatives. Wabash Valley states that it will become a FERC-jurisdictional public utility on July 1, 2004, by virtue of its repurchase of its outstanding U.S. Department of Agriculture Rural Utilities Service debt. Wabash also states that in compliance with section 205 of the Federal Power Act (16 U.S.C. 824d), Wabash Valley is filing with the Commission all of its rates, terms and conditions of service.

Wabash states that copies of this filing were served upon Wabash Valley's Members and the public utility commissions in Illinois, Indiana, Michigan and Ohio.

Comment Date: May 21, 2004.

10. New York Independent System Operator, Inc.

[Docket No. ER04–791–000]

Take notice that on April 30, 2004, the New York Independent System Operator, Inc. (NYISO) filed proposed interim scheduling procedures for External Transactions at the Shoreham Proxy Generator Bus. NYISO is requesting permission to make the filing effective between June 22 and July 6, 2004, subject to its satisfying certain notice requirements specified in the filing.

NYISO states that it has served a copy of this filing upon all parties that have executed Service Agreements under the NYISO's Open-Access Transmission Tariff or Services Tariff, ISO New England Inc., the New York State Public Service Commission and the electric utility regulatory agencies in New Jersey and Pennsylvania.

Comment Date: May 21, 2004.

11. California Independent System Operator Corporation

[Docket No. ER04–793–000]

Take notice that on April 30, 2004, California Independent System Operator Corporation (ISO) tendered for filing a proposed amendment (Amendment No. 59) to the ISO Tariff. The ISO states that Amendment No. 59 provides standards for dynamic scheduling of imports of Energy and Ancillary Services. ISO requests that the provisions of Amendment No. 59 be put into effect 60 days from the date of this filing, *i.e.,* on June 29, 2004, with the exception of the proposed revision to the definition of Tolerance Band which will be made effective in accordance with the orders on MD02 Phase 1B.

ISO states that copies this filing has been served on the Public Utilities Commission of California, the California Energy Commission, the California Electricity Oversight Board and on all parties with effective Scheduling Coordinator Service Agreements under the ISO Tariff.

Comment Date: May 21, 2004.

12. Entergy Services, Inc.

[Docket No. ER04–795–000]

Take notice that on April 30, 2004, Entergy Services, Inc., (Entergy) on behalf of Entergy Arkansas, Inc., tendered for filing an unexecuted, amended and restated Interconnection and Operating Agreement with Plum Point Energy Associates, LLC (Plum Point), and an updated Generator Imbalance Agreement with Plum Point.

Comment Date: May 21, 2004.

13. PJM Interconnection, L.L.C.

[Docket No. ER04–796–000]

Take notice that on April 30, 2004, PJM Interconnection, L.L.C. (PJM), tendered for filing an unexecuted service agreement for non-firm point-to-point transmission service with Exelon Generation Company, L.L.C., (ExGen) for use solely in connection with a dynamic schedule, in an amount not to exceed 35 MW, to the Hannibal, Ohio facility of Ormet Primary Aluminum Corporation. PJM states that consistent with the Commission's order issued on April 27, 2004 (107 FERC ¶ 61,087) establishing May 1, 2004 as the effective date for ComEd's integration, PJM requests that the enclosed agreement be accepted effective May 1, 2004, and therefore requests waiver of the 60-day notice requirement.

PJM states that copies of this filing were served upon ExGen and the state commissions in the PJM region.

Comment Date: May 21, 2004.

14. ISO New England Inc.

[Docket No. ER04–798–000]

Take notice that on April 30, 2004, ISO New England Inc. (ISO) submitted notice to the Commission regarding the correction of Day-Ahead Energy Market results for April 19, 2004 and an application pursuant to section 205 of the Federal Power Act to revise Market Rule 1 to address the events of April 19, 2004 and other such situations.

ISO states that copies of the filing have been served on all NEPOOL Participants, and the Governors and utility regulatory agencies of the New England States.

Comment Date: May 21, 2004.

15. Southwest Power Pool, Inc.

[ER04–799–000]

Take notice that on April 30, 2004, Southwest Power Pool, Inc. (SPP) submitted for filing an executed service agreement for Network Integration Transmission Service and an executed Network Operating Agreement with Kansas Electric Power Cooperative, Inc. (KEPCO). SPP states that it seeks an effective date of April 1, 2004 for the service agreement.

SPP states that it has served KEPCO with a copy of this filing.

Comment Date: May 21, 2004.

16. Midwest Independent Transmission System Operator, Inc.

[Docket No. ER04–800–000]

Take notice that on April 30, 2004, Midwest Independent Transmission System Operator, Inc. (ISO) pursuant to section 205 of the Federal Power Act and section 35.12 of the Commission's regulations, 18 CFR 35.12 (2003), submitted for filing a Facilities Construction Agreement among Louisville Gas and Electric Company and Kentucky Utilities, the Midwest ISO and Cinergy Services, Inc., acting as agent for and on behalf of its operating company, PSI Energy, Inc.

ISO states that a copy of this filing was served on all parties.

Comment Date: May 21, 2004.

17. Commonwealth Edison Company

[Docket No. ER04–801–000]

Take notice that on April 30, 2004, Commonwealth Edison Company (ComEd) tendered for filing an executed Standard Large Generator Interconnection Agreement between ComEd and Indeck-Elwood, L.L.C., for Indeck's Elwood Energy Center generating facility, located in Elwood, Illinois. ComEd requests that the Commission accept the LGIA for filing as a service agreement under the PJM OATT effective as of May 1, 2004.

Comment Date: May 21, 2004.

18. Wisconsin Electric Power Company

[Docket No. ER04–804–000]

Take notice that on April 30, 2004, Wisconsin Electric Power Company (Wisconsin Electric) tendered for filing a proposed amendment to an agreement with Alliant Energy Corporation (Alliant) pursuant to which Wisconsin Electric provides Alliant wholesale distribution export service. Wisconsin Electric states that the purpose of the amendment is to extend the term of the agreement and to increase the rate Wisconsin Electric charges for the service which is provided under Wisconsin Electric's Rate Schedule FERC No. 102.

Wisconsin Electric states that copies of this filing have been served upon Alliant, the Michigan Public Service Commission and the Public Service Commission of Wisconsin.

Comment Date: May 21, 2004.

19. Wabash Valley Power Association

[Docket No. ER04–805–000]

Take notice that on April 30, 2004, Wabash Valley Power Association (Wabash Valley) submitted an Application for Market-Based Rate Authority. Wabash Valley states that it will become a FERC-jurisdictional public utility on July 1, 2004, by virtue of its repurchase of its outstanding U.S. Department of Agriculture Rural Utilities Service debt. Therefore, in compliance with section 205 of the Federal Power Act (16 U.S.C. 824d), Wabash Valley is requesting such authority, effective July 1, 2004.

Wabash Valley states that copies of this filing were served upon Wabash Valley's Members and the public utility commissions in Illinois, Indiana, Michigan and Ohio.

Comment Date: May 21, 2004.

20. Unitil Power Corp.

[Docket No. ER04–806–000]

Take notice that on April 29, 2004, Unitil Power Corp. (Unitil System) tendered for filing pursuant to Attachment 1 to Rate Schedule FERC No. 1, the Amended Unitil System Agreement, Appendix I, section D, the following material: (1) Statement of all

sales and billing transactions under Supplement No. 1 to Rate Schedule FERC No. 1, the Unitil System Agreement, for the period January 1, 2003 through April 30, 2003 along with the actual costs incurred by Unitil Power Corp. by FERC account; (2) statement of all billing transactions under the Amended Unitil System Agreement for the period May 1, 2003 through December 31, 2003 along with the actual costs incurred by Unitil Power Corp. by FERC account, including the calculation of Contract Release Payments and Administrative Service Charges, and (3) Unitil Power Corp. rates billed from January 1, 2003 to April 30, 2003 and supporting rate development, under the Unitil System Agreement.

Unitil Power Corp. states that a copy of the filing was served upon the New Hampshire Public Utilities Commission.

Comment Date: May 21, 2004.

Standard Paragraph

Any person desiring to intervene or to protest this filing should file with the Federal Energy Regulatory Commission, 888 First Street, NE., Washington, DC 20426, in accordance with Rules 211 and 214 of the Commission's Rules of Practice and Procedure (18 CFR 385.211 and 385.214). Protests will be considered by the Commission in determining the appropriate action to be taken, but will not serve to make protestants parties to the proceeding. Any person wishing to become a party must file a motion to intervene. All such motions or protests should be filed on or before the comment date, and, to the extent applicable, must be served on the applicant and on any other person designated on the official service list. This filing is available for review at the Commission or may be viewed on the Commission's Web site at *http://www.ferc.gov,* using the ''FERRIS'' link. Enter the docket number excluding the last three digits in the docket number filed to access the document. For assistance, call (202) 502–8222 or TTY, (202) 502–8659. Protests and interventions may be filed electronically via the Internet in lieu of paper; *see* 18 CFR 385.2001(a)(1)(iii) and the instructions on the Commission's Web site under the ''e-Filing'' link. The Commission strongly encourages electronic filings.

Magalie R. Salas,

Secretary.

[FR Doc. E4–1162 Filed 5–14–04; 8:45 am]

BILLING CODE 6717–01–P

DEPARTMENT OF ENERGY

Federal Energy Regulatory Commission

[Docket No. EC04–104–000, et al.]

Virginia Electric and Power Company, et al.; Electric Rate and Corporate Filings

May 10, 2004.

The following filings have been made with the Commission. The filings are listed in ascending order within each docket classification.

1. Virginia Electric and Power Company; UAE Mecklenburg Cogeneration LP; Mecklenburg Cogenco, Inc.; Cogeneration Capital Corp.; American Energy Holdings Corp.; United American Energy Corp.

[Docket No. EC04–104–000]

Take notice that, on May 6, 2004, Virginia Electric and Power Company (Dominion Virginia Power) and UAE Mecklenburg Cogeneration LP (UAE Mecklenburg), Mecklenburg Cogenco, Inc. (Cogenco), Cogeneration Capital Corp. (Capital), United American Energy Holdings Corp. and United American Energy Corp. (UAE Corp.) (collectively, Applicants), submitted for filing, pursuant to section 203 of the Federal Power Act and Part 33 of the Commission's regulations, an application requesting Commission authorization for: (1) The proposed transfer of 100% of the ownership interests of Cogenco and Capital from UAE Corp. to Dominion Virginia Power; (2) Dominion Virginia Power's ownership of an approximately 138 MW generating facility and its appurtenant transmission facilities located near Clarksville, Virginia (collectively, the Facility) resulting from the proposed transfer; and (3) the proposed transfer of the Facility's market-based rate tariff (collectively, the Acquisition). UAE Corp. also requests that the Commission authorize, to the extent necessary, certain proposed internal restructurings of UAE Corp., that will occur prior to the closing of the Acquisition.[1] The Applicants request that the Commission act on the Application within approximately sixty days or by July 5, 2004.

Applicants state that copies of the filing were served upon the parties to the transaction, Dominion Virginia Power's wholesale requirements customers, the Virginia State Corporation Commission and the North Carolina Utilities Commission.

Comment Date: May 27, 2004.

2. The Detroit Edison Company

[Docket No. EL04–31–002]

Take notice that on April 30, 2004, The Detroit Edison Company (Detroit Edison) tendered for filing in compliance with the Commission's March 5, 2004 Order in Docket No. EL04–31–000 the net effect on imbalance payments as a result of the recalculation of the decremental prices for the period of January 1, 2003 through December 1, 2003.

Comment Date: May 21, 2004.

3. Mississippi Delta Energy Agency and the Clarksdale Public Utilities Commission of the City of Clarksdale, MS, Complainants v. Entergy Services, Inc., and Entergy Operating Companies, Respondents

[Docket No. EL04–99–000]

Take notice that on May 5, 2004, the Mississippi Delta Energy Agency and the Clarksdale Public Utilities Commission of the City of Clarksdale, Mississippi filed a formal complaint against Entergy Services, Inc., and Entergy Operating Companies (collectively, Entergy) pursuant to section 206 of the Federal Power Act and Rule 206 of the Commission's Rules of Practice and Procedure, alleging that Entergy has unjustly and unreasonably classified certain transmission facilities as direct assignment facilities rather than network upgrades, in violation of Commission policy concerning pricing for network transmission facilities.

Comment Date: May 25, 2004.

4. Conectiv Atlantic Generation, LLC

[Docket No. ER00–1770–007]

Take notice that on May 3, 2004, Conectiv Atlantic Generation, LLC (CAG) tendered for filing a notice of change in status under CAG's market-based rate authority to reflect CAG's acquisition of the Deepwater generating station from its affiliate, Atlantic City Electric Company. CAG submits that its ownership of Deepwater does not raise

[1] Prior to Closing, UAE Corp. may either convert Cogenco and Capital to Delaware limited liability companies or transfer the partnership interests in UAE Mecklenburg to limited liability companies that are wholly-owned indirect subsidiaries of UAE Corp., and Dominion Virginia Power will purchase the resulting LLC membership interests (in either case, the UAE Internal Reorganization). In any event, Dominion Virginia Power will acquire entities that are indirectly wholly-owned by UAE Corp. and whose sole assets are the general and limited partnership interests in UAE Mecklenburg. To the extent required, UAE Corp. requests Commission authority for the UAE Internal Reorganization in this filing. UAE Corp. assumes the Commission's Section 203 jurisdiction over the UAE Internal Reorganization and it requests that the Commission authorize, to the extent necessary, the UAE Internal Reorganization.

market power concerns and should not affect CAG's existing market-based rate authority.

CAG states that copies of the filing were served upon the Public Service Commission of the District of Columbia, Maryland Public Service Commission, Virginia State Corporation Commission, State of New Jersey Board of Public Utilities and Delaware Public Service Commission.

Comment Date: May 24, 2004.

5. California Independent System Operator Corporation

[Docket No. ER02–651–004]

Take notice that on May 3, 2004, the California Independent System Operator Corporation (ISO) submitted a filing to comply with the Commission's Order issued on April 1, 2004, in Docket No. ER02–651–002, 107 FERC ¶ 61,001. The ISO states that the compliance filing has been served on all parties to these proceedings.

Comment Date: May 24, 2004.

6. Ohio Valley Electric Corporation

[Docket No. ER03–1414–001]

Take notice that on May 3, 2004, Ohio Valley Electric Corporation submitted a compliance filing pursuant to Commission's Order issued April 1, 2004 in Docket No. ER03–1414–000.

Ohio Valley Electric Corporation states that a copy of this filing was served upon PSEG Lawrenceburg Energy Company LLC.

Comment Date: May 24, 2004.

7. PJM Interconnection, L.L.C.

[Docket No. ER04–676–001]

Take notice that on May 3, 2004, PJM Interconnection, L.L.C. (PJM) submitted for filing a substitute executed construction service agreement (CSA) among PJM, Industrial Power Generating Corporation, and Monongahela Power Company, The Potomac Edison Company, and West Penn Power Company, all doing business as Allegheny Power. PJM requests waiver of the Commission's notice requirements to allow a March 12, 2004 effective date for the substitute CSA.

PJM states that copies of this filing were served upon persons designated on the official service list compiled by the Secretary in this proceeding, the parties to the agreements, and the state regulatory commissions within the PJM region.

Comment Date: May 24, 2004.

8. Virginia Electric and Power Company

[Docket No. ER04–712–001]

Take notice that on May 3, 2004, Virginia Electric and Power Company, doing business as Dominion Virginia Power, tendered for filing a revised tariff sheet (Revised Sheet) in Virginia Electric and Power Company's FERC Electric Tariff, Second Revised Volume No. 5 (OATT) modifying the pricing of Backup Supply Service for Unbundled Retail Transmission Customers under Schedule 10 to its OATT. Dominion Virginia Power continues its request for waiver of the Commission's notice of filing requirements to allow the Revised Sheet to become effective as of the date of the Virginia State Corporation Commission's (SCC) final order in Case No. PUE–2003–00118.

Dominion Virginia Power states that copies of the filing were served upon the Commission's official service list in this proceeding.

Comment Date: May 24, 2004.

9. Southwest Power Pool, Inc.

[Docket Nos. RT04–1–002 and ER04–48–002]

Take notice that on May 3, 2004, Southwest Power Pool, Inc. (SPP), in compliance with Commission Order in *Southwest Power Pool, Inc.,* 106 FERC ¶ 61,110 (2004), submitted tariff revisions and additional documentary support in connection with SPP's efforts to become a fully compliant regional transmission organization (RTO) under Commission Order Nos. 2000 and 2000–A.

SPP states that copies of this compliance filing were served upon all persons on the service list in this docket, as well as all SPP Members and each state regulatory commission in the SPP service area.

Comment Date: May 24, 2004.

Standard Paragraph

Any person desiring to intervene or to protest this filing should file with the Federal Energy Regulatory Commission, 888 First Street, NE., Washington, DC 20426, in accordance with Rules 211 and 214 of the Commission's Rules of Practice and Procedure (18 CFR 385.211 and 385.214). Protests will be considered by the Commission in determining the appropriate action to be taken, but will not serve to make protestants parties to the proceeding. Any person wishing to become a party must file a motion to intervene. All such motions or protests should be filed on or before the comment date, and, to the extent applicable, must be served on the applicant and on any other person designated on the official service list. This filing is available for review at the Commission or may be viewed on the Commission's Web site at *http://www.ferc.gov*, using the ''FERRIS'' link. Enter the docket number excluding the last three digits in the docket number filed to access the document. For assistance, call (202) 502–8222 or TTY, (202) 502–8659. Protests and interventions may be filed electronically via the Internet in lieu of paper; see 18 CFR 385.2001(a)(1)(iii) and the instructions on the Commission's web site under the ''e-Filing'' link. The Commission strongly encourages electronic filings.

Magalie R. Salas,

Secretary.

[FR Doc. E4–1177 Filed 5–14–04; 8:45 am]

BILLING CODE 6717–01–P

DEPARTMENT OF ENERGY

Federal Energy Regulatory Commission

[Project No. 935–053]

PacifiCorp; Notice of Application and Applicant Prepared Environmental Assessment Tendered for Filing With the Commission, and Establishing Procedural Schedule for Relicensing and Deadline for Submission of Final Amendments

May 11, 2004.

Take notice that the following hydroelectric application has been filed with the Commission and is available for public inspection.

a. *Type of Application:* New major license.

b. *Project No.:* 935–053.

c. *Date Filed:* April 28, 2004.

d. *Applicant:* PacifiCorp.

e. *Name of Project:* Merwin Hydroelectric Project.

f. *Location:* On the North Fork Lewis River, in Clark and Cowlitz Counties, Washington. The project occupies 142.65 acres of Federal land administered by the Bureau of Land Management.

g. *Filed Pursuant to:* Federal Power Act 16 U.S.C. 791(a)–825(r).

h. *Applicant Contact:* Frank C. Shrier, Lead Project Manager, Hydro Licensing, PacifiCorp 825 NE. Multnomah Street, Suite 1500 Portland, Oregon 97232; telephone (503) 813–6622.

i. *FERC Contact:* Jon Cofrancesco at (202) 502–8951; or e-mail at *jon.cofrancesco@ferc.gov*.

j. *Deadline for filing comments on the application:* 60 days from the filing date shown in paragraph (c), or June 28, 2004.

All documents (original and eight copies) should be filed with: Magalie R. Salas, Secretary, Federal Energy Regulatory Commission, 888 First Street, NE., Washington, DC 20426. Comments may be filed electronically via the Internet in lieu of paper; *see* 18 CFR 385.2001(a)(1)(iii) and the instructions on the Commission's Web site (*http://www.ferc.gov*) under the ''e-Filing'' link. After logging into the e-Filing system, select ''Comment on Filing'' from the Filing Type Selection screen and continue with the filing process. The Commission strongly encourages electronic filing.

The Commission's rules of practice require all interveners filing documents with the Commission to serve a copy of that document on each person on the official service list for the project. Further, if an intervener files comments or documents with the Commission relating to the merits of an issue that may affect the responsibilities of a particular resource agency, they must also serve a copy of the document on that resource agency.

k. *Cooperating Agencies:* We are asking Federal, State, local, and tribal agencies with jurisdiction and/or special expertise with respect to environmental issues to cooperate with us in the preparation of the environmental document. Agencies who would like to request cooperating status should follow the instructions for filing comments described in item j above. Agencies granted cooperating status will be precluded from being an intervenor in this proceeding consistent with the Commission's regulations.

l. With this notice, we are initiating consultation with the Washington State Historic Preservation Officer (SHPO), as required by 106, National Historic Preservation Act, and the regulations of the Advisory Council on Historic Preservation, 36 CFR 800.4.

m. *Status:* This application has not been accepted for filing. We are not soliciting motions to intervene, protests, or final terms and conditions at this time.

n. *The Project Description:* The existing project consists of: (1) A 728-foot-long concrete radius arch dam; (2) a reservoir with a surface area of 4,040 acres at the normal maximum operating level (239.6 feet mean sea level); (3) a 1,462-foot-long diversion tunnel; (4) an intake structure; (5) three 150-foot-long penstocks; (6) a powerhouse, containing three 45 megawatt (MW) and one 1 MW generating units, having a total installed capacity of 136 MW; (8) a gated spillway; and (9) appurtenant facilities.

PacifiCorp operates the Merwin Project as a regulation facility in a coordinated manner with three upstream hydroelectric projects for the purposes of power generation, flood management, recreation, and downstream fish habitat enhancement. The project provides minimum instream flows to meet ramping requirements for the lower river. PacifiCorp does not propose any major modifications to project facilities or upgrades and proposes to implement various environmental measures at the project.

o. *Locations of the Application:* A copy of the application is available for review at the Commission in the Public Reference Room or may be viewed on the Commission's Web site at *http://www.ferc.gov* using the ''eLibrary'' link. Enter the docket number, excluding the last three digits in the docket number field (P–935), to access the document. For assistance, contact FERC Online Support at *FERCOnlineSupport@ferc.gov* or toll-free at 1–866–208–3676, or for TTY, (202) 502–8659. A copy is also available for inspection and reproduction at the address in item (h) above.

You may also register online at *http://www.ferc.gov/esubscribenow.htm* to be notified via email of new filings and issuances related to this or other pending projects. For assistance, contact FERC Online Support.

p. *Procedural schedule and final amendments:* The application will be processed according to the following Hydro Licensing Schedule. Revisions to the schedule may be made as appropriate.

Milestone	Target date
Issue acceptance or deficiency letter.	July 2004.
Request additional information (if necessary).	July 2004.
Notice soliciting final terms and conditions.	July 2004.
Notice of Draft NEPA Document.	October 2004.
Notice of Final NEPA Document.	February 2005.
Ready for Commission Decision on the Application.	October 2005.

Final amendments to the application must be filed with the Commission no later than 30 days from the issuance date of the notice soliciting final terms and conditions.

Linda Mitry,

Acting Secretary.

[FR Doc. E4–1164 Filed 5–14–04; 8:45 am]

BILLING CODE 6717–01–P

DEPARTMENT OF ENERGY

Federal Energy Regulatory Commission

[Project No. 2111–018]

PacifiCorp; Notice of Application and Applicant Prepared Environmental Assessment Tendered for Filing With the Commission, and Establishing Procedural Schedule for Relicensing and Deadline for Submission Of Final Amendments

May 11, 2004.

Take notice that the following hydroelectric application has been filed with the Commission and is available for public inspection.

a. *Type of Application:* New Major License.

b. *Project No.:* 2111–018.

c. *Date Filed:* April 28, 2004.

d. *Applicant:* PacifiCorp.

e. *Name of Project:* Swift No. 1 Hydroelectric Project.

f. *Location:* On the North Fork Lewis River, in Skamania County, Washington. The project occupies 63.25 acres of federal land administered by the Bureau of Land Management and 229.00 acres of federal lands administered by the U.S. Forest Service.

g. *Filed Pursuant to:* Federal Power Act 16 U.S.C. §§ 791 (a)–825(r).

h. *Applicant Contact:* Frank C. Shrier, Lead Project Manager, Hydro Licensing, PacifiCorp 825 N.E. Multnomah Street, Suite 1500, Portland, Oregon 97232; Telephone (503) 813–6622.

i. *FERC Contact:* Jon Cofrancesco at (202) 502–8951; or e-mail at *jon.cofrancesco@ferc.gov.*

j. *Deadline for filing comments on the application:* 60 days from the filing date shown in paragraph (c), or June 28, 2004.

All documents (original and eight copies) should be filed with: Magalie R. Salas, Secretary, Federal Energy Regulatory Commission, 888 First Street, NE., Washington, DC 20426. Comments may be filed electronically via the Internet in lieu of paper; see 18 CFR 385.2001(a)(1)(iii) and the instructions on the Commission's Web site (*http://www.ferc.gov*) under the ''e-Filing'' link. After logging into the e-Filing system, select ''Comment on Filing'' from the Filing Type Selection screen and continue with the filing process. The Commission strongly encourages electronic filing.

The Commission's Rules of Practice require all interveners filing documents with the Commission to serve a copy of that document on each person on the official service list for the project. Further, if an intervener files comments

or documents with the Commission relating to the merits of an issue that may affect the responsibilities of a particular resource agency, they must also serve a copy of the document on that resource agency.

k. *Cooperating Agencies:* We are asking federal, state, local, and tribal agencies with jurisdiction and/or special expertise with respect to environmental issues to cooperate with us in the preparation of the environmental document. Agencies who would like to request cooperating status should follow the instructions for filing comments described in item j above. Agencies granted cooperating status will be precluded from being an intervenor in this proceeding consistent with the Commission's regulations.

l. With this notice, we are initiating consultation with the Washington State Historic Preservation Officer (SHPO), as required by 106, National Historic Preservation Act, and the regulations of the Advisory Council on Historic Preservation, 36 CFR 800.4.

m. *Status:* This application has not been accepted for filing. We are not soliciting motions to intervene, protests, or final terms and conditions at this time.

n. *The Project Description:* The existing project consists of: (1) A 2,100-foot-long earthfill dam; (2) a reservoir with a surface area of 4,680 acres at the normal maximum operating elevation (1,000 feet mean sea level); (3) a 3,000-foot-long diversion tunnel; (4) an intake structure; (5) three individual penstocks; (6) a surge tank; (7) a powerhouse, containing three 80-megawatt (MW), generating units, having a total installed capacity of 240 MW; (8) a 1,800-foot-long, gated spillway and discharge channel; and (9) appurtenant facilities. PacifiCorp operates the Swift No. 1 Project as a flexible and load following facility in a coordinated manner with three downstream hydroelectric projects to meet reservoir storage requirements, and for the purposes of flood management, system load, and recreation.

PacifiCorp does not propose any major modifications to project facilities or upgrades and proposes to implement various environmental measures at the project.

o. *Locations of the Application:* A copy of the application is available for review at the Commission in the Public Reference Room or may be viewed on the Commission's website at http://www.ferc.gov using the ''eLibrary'' link. Enter the docket number, excluding the last three digits in the docket number field (P–2111), to access the document. For assistance, contact FERC Online Support at *FERCOnlineSupport@ferc.gov* or toll-free at 1–866–208–3676, or for TTY, (202) 502–8659. A copy is also available for inspection and reproduction at the address in item (h) above.

You may also register online at *http://www.ferc.gov/esubscribenow.htm* to be notified via email of new filings and issuances related to this or other pending projects. For assistance, contact FERC Online Support.

p. *Procedural schedule and final amendments:* The application will be processed according to the following Hydro Licensing Schedule. Revisions to the schedule may be made as appropriate.

Milestone	Target date
Issue acceptance or deficiency letter.	July 2004.
Request additional information (if necessary).	July 2004.
Notice soliciting final terms and conditions.	July 2004.
Notice of Draft NEPA Document.	October 2004.
Notice of Final NEPA Document.	February 2005.
Ready for Commission Decision on the Application.	October 2005.

Final amendments to the application must be filed with the Commission no later than 30 days from the issuance date of the notice soliciting final terms and conditions.

Magalie R. Salas,

Secretary.

[FR Doc. E4–1176 Filed 5–14–04; 8:45 a.m.]

BILLING CODE 6717–01–P

DEPARTMENT OF ENERGY

Federal Energy Regulatory Commission

[Docket Nos. CP04–223–000 and CP04–293–000]

KeySpan LNG, L.P.; Notice of Intent To Prepare an Environmental Impact Statement for the Proposed Keyspan LNG Facility Upgrade Project, Request for Comments on Environmental Issues, and Notice of Public Scoping Meeting

May 11, 2004.

The staff of the Federal Energy Regulatory Commission (FERC or Commission) will prepare an environmental impact statement (EIS) on KeySpan LNG, L.P.'s (KeySpan LNG) proposed KeySpan LNG Facility Upgrade Project in Providence, Rhode Island. On May 7, 2004, the Commission gave notice that KeySpan LNG filed applications on April 30, 2004, for its proposal under sections 3 and 7 of the Natural Gas Act. That notice gave a deadline of May 21, 2004, for the filing of motions to intervene, protest, and comment.

This instant notice announces the opening of the scoping process the Commission will use to gather input from the public and interested agencies on the project. Your input will help determine which issues need to be evaluated in the EIS. Please note that the scoping period will close on June 11, 2004.

Comments may be submitted in written form or verbally. Further details on how to submit written comments are provided in the Public Participation section of this notice. In lieu of sending written comments, you may attend the public scoping meeting scheduled as follows: FERC Public Scoping Meeting, KeySpan LNG Facility Upgrade Project, Thursday, June 3, 2004, at 7 p.m. Rhode Island College, Providence, 600 Mt. Pleasant Ave. (John Fogarty Life Science Building).

This notice is being sent to residences within 0.5 mile of KeySpan LNG's existing liquefied natural gas (LNG) storage facility and to landowners, businesses, and residents adjacent to a planned natural gas pipeline. It is also being sent to Federal, state, and local government agencies; elected officials; environmental and public interest groups; Native American tribes; other interested parties; and local libraries and newspapers. We [1] are asking local government representatives to notify their constituents of this planned project and to encourage them to comment on their areas of concern.

Summary of the Proposed Project

KeySpan LNG proposes to upgrade its existing LNG storage facility in Providence, Rhode Island. The upgrade would allow KeySpan LNG to convert the LNG terminal to a facility capable of receiving marine deliveries and to augment the facility's existing vaporization system.

According to KeySpan LNG, the KeySpan LNG Facility Upgrade Project would provide a new source of reliable LNG imports to Rhode Island which would serve the entire New England area, as well as augment the supply of LNG needed to fill the region's LNG storage facilities to meet peak day needs. The project would increase the site's current capacity of 150 million

[1] ''We,'' ''us,'' and ''our'' refer to the environmental staff of the FERC's Office of Energy Projects.

standard cubic feet per day (MMSCFD) to a total of 525 MMSCFD.

The facilities proposed include:

- A new ship berth in the Providence River;
- New liquid unloading arms and a transfer line;
- New vapor return blowers, vapor return line, and loading arm;
- Boil-off-gas compressor and condenser;
- New LNG pumping system;
- Operations control buildings;
- Other ancillary LNG facilities; and
- 1.3 miles of 20-inch-diameter pipeline to transport natural gas from the terminal an existing pipeline currently owned and operated by Algonquin Gas Transmission Company (Algonquin).[2]

KeySpan LNG would also abandon by removal a 12-inch-diameter LNG barge uploading line to provide space for the new ship vapor return line.

A map depicting the LNG facility location and the pipeline route under consideration is provided in appendix 1.[3]

KeySpan LNG proposes to complete the project in time for the fall 2005 heating season. To achieve this in-service date, KeySpan LNG is requesting approval to begin construction of the facilities in the spring of 2005. The approximate duration of construction would be 7–9 months.

The EIS Process

The FERC will be the lead Federal agency for this EIS process which is being conducted to satisfy the requirements of the National Environmental Policy Act (NEPA). The FERC will use the EIS to consider the environmental impact that could result if it issues KeySpan the requested authorizations under sections 3 and 7 for its proposed project.

This notice formally announces our preparation of the EIS and the beginning of the process referred to as ''scoping.'' We are soliciting input from the public and interested agencies to help us focus the analysis in the EIS on the potentially significant environmental issues related to the proposed action.

Our independent analysis of the issues will initially be included in a draft EIS. The draft EIS will be mailed to Federal, State, and local government agencies; elected officials; environmental and public interest groups; Native American tribes; affected landowners; other interested parties; and local libraries and newspapers. A 45-day comment period will be allotted for review of the draft EIS. We will consider all timely comments and revise the document, as necessary, before issuing a final EIS.

By this notice, we are asking these and other Federal, State, and local agencies with jurisdiction and/or special expertise with respect to environmental issues to formally cooperate with us in the preparation of the EIS. Agencies that would like to request cooperating status should follow the instructions for filing comments provided below. Currently, the U.S. Army Corps of Engineers; U.S. Coast Guard; and the Rhode Island Department of Environmental Management, Division of Fish and Wildlife (RIDFW) have expressed their interest in participating as cooperating agencies to satisfy their environmental review responsibilities.

Currently Identified Environmental Issues

We have already identified several issues that we think deserve attention based on a preliminary review of the proposed facilities and the environmental information provided by KeySpan LNG and the RIDFW. The following preliminary list of issues may be changed based on your comments and our analysis:

- Commercial and recreational use of the Providence River;
- Contaminated soils and hazardous wastes; and
- Public safety.

Public Participation

You can make a difference by providing us with your comments or concerns about the proposal. Please focus your comments on the potential environmental effects, reasonable alternatives (including alternative facility sites and pipeline routes), and measures to avoid or lessen environmental impact. The more specific your comments, the more useful they will be. To ensure that your comments are timely and properly recorded, please mail your comments so that they will be received in Washington, DC on or before June 11, 2004, and carefully follow these instructions:

- Send an original and two copies of your letter to: Magalie R. Salas, Secretary, Federal Energy Regulatory Commission, 888 First St., NE., Room 1A, Washington, DC 20426;
- Label one copy of your comments for the attention of Gas Branch 1, DG2E; and
- Reference Docket No. CP04–223–000 on the original and both copies.

The public scoping meeting to be held on June 3, 2004, in Providence is designed to provide another opportunity to offer comments on the proposed project. Interested groups and individuals are encouraged to attend the meeting and to present comments on the environmental issues they believe should be addressed in the EIS. A transcript of the meeting will be made so that your comments will be accurately recorded.

The Commission encourages electronic filing of comments. *See* 18 Code of Federal Regulations 385.2001(a)(1)(iii) and the instructions on the Commission's Internet Web site at *http://www.ferc.gov* under the ''eFiling'' link and the link to the User's Guide. Prepare your submission in the same manner as you would if filing on paper and save it to a file on your hard drive. Before you can file comments you will need to create an account by clicking on ''Login to File'' and then ''New User Account.'' You will be asked to select the type of filing you are making. This filing is considered a ''Comment on Filing.''

Becoming an Intervenor

In addition to involvement in the EIS scoping process, you may want to become an official party to the proceeding known as an ''intervenor.'' Intervenors play a more formal role in the process. Among other things, intervenors have the right to receive copies of case-related Commission documents and filings by other intervenors. Likewise, each intervenor must provide 14 copies of its filings to the Secretary of the Commission and must send a copy of its filings to all other parties on the Commission's service list for this proceeding. If you want to become an intervenor you must file a motion to intervene according to rule 214 of the Commission(s rules of practice and procedure (18 CFR 385.214) (*see* appendix 2).[4] Only intervenors have the right to seek rehearing of the Commission's decision.

Affected landowners and parties with environmental concerns may be granted intervenor status upon showing good cause by stating that they have a clear and direct interest in this proceeding

[2] This interconnecting pipeline would likely be constructed by Algonquin, not KeySpan LNG.

[3] The appendices referenced in this notice are not being printed in the **Federal Register**. Copies are available on the Commission's Internet Web site (*http://www.ferc.gov*) at the ''eLibrary'' link or from the Commission(s Public Reference Room at (202) 502–8371. For instructions on connecting to eLibrary, refer to the end of this notice. Copies of the appendices were sent to all those receiving this notice in the mail.

[4] Interventions may also be filed electronically via the Internet in lieu of paper. *See* the discussion below on filing comments electronically.

which would not be adequately represented by any other parties. You do not need intervenor status to have your environmental comments considered.

Availability of Additional Information

Additional information about the project is available from the Commission(s Office of External Affairs at 1–866–208–FERC (3372) or on the FERC Internet Web site (*http://www.ferc.gov*). Using the ''eLibrary'' link, select ''General Search'' from the eLibrary menu, enter the selected date range and ''Docket Number'' (*i.e.*, CP04–223–000), and follow the instructions. Searches may also be done using the phrase ''KeySpan LNG Facility Upgrade Project'' in the ''Text Search'' field. For assistance with access to eLibrary, the helpline can be reached at 1–866–208–3676, TTY (202) 502–8659, or at *FERCOnlineSupport@ferc.gov*. The eLibrary link on the FERC Internet website also provides access to the texts of formal documents issued by the Commission, such as orders, notices, and rule makings.

In addition, the FERC now offers a free service called eSubscription that allows you to keep track of all formal issuances and submittals in specific dockets. This can reduce the amount of time you spend researching proceedings by automatically providing you with notification of these filings, document summaries, and direct links to the documents. To register for this service, go to *http://www.ferc.gov/esubscribenow.htm*.

Linda Mitry,

Acting Secretary.

[FR Doc. E4–1173 Filed 5–14–04; 8:45 am]

BILLING CODE 6717–01–P

DEPARTMENT OF ENERGY

Federal Energy Regulatory Commission

[Docket No. PL04–9–000]

Acquisition and Disposition of Merchant Generation Assets by Public Utilities; Notice of Technical Conference

May 11, 2004.

1. Take notice that a technical conference will be held on acquisitions and dispositions by public utilities on June 10, 2004, from 1 a.m. to 4 p.m. (EST), in the Commission Meeting Room at the Federal Energy Regulatory Commission, 888 First Street, NE., Washington, DC. Members of the Commission will attend the conference. An agenda will be issued at a later time.

The topic of the conference will be issues associated with public utilities' acquisition and disposition of merchant generation assets, including the implications for the competitive landscape in general and for a region's wholesale competition in particular. The conference will discuss proposals for addressing these issues and concerns.

2. The conference will be transcribed. Those interested in acquiring the transcript should contact Ace Reporters at 202–347–3700 or 800–336–6646. Transcripts will be placed in the public record ten days after the Commission receives the transcripts. Additionally, Capitol Connection offers the opportunity for remote listening and viewing of the conference. It is available for a fee, live over the Internet, by phone or via satellite. Persons interested in receiving the broadcast, or who need information on making arrangements, should contact David Reininger or Julia Morelli at Capitol Connection (703–993–3100) as soon as possible or visit the Capitol Connection Web site at *http://www.capitolconnection.org* and click on ''FERC.''

3. For more information about the conference, please contact Mary Beth Tighe at 202–502–6452 or *mary.beth.tighe@ferc.gov*.

4. A supplemental notice of this conference will be issued later that will provide details of the conference, including the panelists.

Magalie R. Salas,

Secretary.

[FR Doc. E4–1174 Filed 5–14–04; 8:45 am]

BILLING CODE 6717–01–P

DEPARTMENT OF ENERGY

Federal Energy Regulatory Commission

[Docket No. PL04–6–000]

Solicitation Processes for Public Utilities; Notice of Technical Conference

May 11, 2004.

1. Take notice that a technical conference will be held on the solicitation processes for public utilities on June 10, 2004, from 9:30 a.m. to 12 p.m. (EST), in the Commission Meeting Room at the Federal Energy Regulatory Commission, 888 First Street, NE, Washington, DC. Members of the Commission will attend the conference. An agenda will be issued at a later time.

2. The topic of the conference will be issues associated with solicitation processes, including solicitations whereby public utilities sell to their affiliates. The conference will address proposals for best practice competitive solicitation methods or principles that could be used to ensure that transactions filed with the Commission for approval are the result of an open and fair process.

3. The conference will be transcribed. Those interested in acquiring the transcript should contact Ace Reporters at 202–347–3700 or 800–336–6646. Transcripts will be placed in the public record ten days after the Commission receives the transcripts. Additionally, Capitol Connection offers the opportunity for remote listening and viewing of the conference. It is available for a fee, live over the Internet, by phone or via satellite. Persons interested in receiving the broadcast, or who need information on making arrangements, should contact David Reininger or Julia Morelli at Capitol Connection (703–993–3100) as soon as possible or visit the Capitol Connection website at *http://www.capitolconnection.org* and click on ''FERC.''

4. For more information about the conference, please contact Mary Beth Tighe at 202–502–6452 or *mary.beth.tighe@ferc.gov*.

5. A supplemental notice of this conference will be issued later that will provide details of the conference, including the panelists.

Magalie R. Salas,

Secretary.

[FR Doc. E4–1175 Filed 5–14–04; 8:45 am]

BILLING CODE 6717–01–P

ENVIRONMENTAL PROTECTION AGENCY

[OAR–2004–0051; FRL–7662–6]

Agency Information Collection Activities: Proposed Collection; Comment Request; Recordkeeping and Reporting Requirements for Diesel Fuel Sold in 2001 and Later Years and for Tax-Exempt (Dyed) Diesel Fuel, EPA ICR Number 1718.06, OMB Control Number 2060–0308

AGENCY: Environmental Protection Agency (EPA).

ACTION: Notice.

SUMMARY: In compliance with the Paperwork Reduction Act (44 U.S.C. 3501 *et seq.*), this document announces that EPA is planning to submit a continuing Information Collection Request (ICR) to the Office of Management and Budget (OMB). This is a request to renew two existing and

related ICRs and combine them into one ICR renewal. These ICRs are scheduled to expire on September 30, 2004. Before submitting the ICR to OMB for review and approval, EPA is soliciting comments on specific aspects of the proposed information collection as described below.

DATES: Comments must be submitted on or before July 16, 2004.

ADDRESSES: Submit your comments, referencing docket ID number OAR–2004–0051, to EPA online using EDOCKET (our preferred method), by e-mail to *a-and-r-Docket@epa.gov*, or by mail to: EPA Docket Center, Environmental Protection Agency, 1200 Pennsylvania Ave., NW., Mail Code: 6102T, Washington, DC 20460. Instructions for using EDOCKET are contained in the section entitled **SUPPLEMENTARY INFORMATION,** below.

FOR FURTHER INFORMATION CONTACT: Anne Pastorkovich, Attorney/Advisor, Transportation and Regional Programs Division, Office of Transportation and Air Quality, telephone number: (202) 343–9623, fax number: (202) 343–2801, e-mail address: *pastorkovich.anne-marie@epa.gov.*

SUPPLEMENTARY INFORMATION: EPA has established a public docket for this ICR under Docket ID number OAR–2004–0051, which is available for public viewing at the Air Docket in the EPA Docket Center (EPA/DC), EPA West, Room B102, 1301 Constitution Ave., NW., Washington, DC. The EPA Docket Center Public Reading Room is open from 8:30 a.m. to 4:30 p.m., Monday through Friday, excluding legal holidays. The telephone number for the Reading Room is (202) 566–1744, and the telephone number for the Air Docket is (202) 566–1741. An electronic version of the public docket is available through EPA Dockets (EDOCKET) at *http://www.epa.gov/edocket.* Use EDOCKET to obtain a copy of the draft information collection, submit or view public comments, access the index listing of the contents of the public docket, and to access those documents in the public docket that are available electronically. Once in the system, select ''search,'' then key in the docket ID number identified above.

Any comments related to this ICR should be submitted to EPA within 60 days of this notice. EPA's policy is that public comments, whether submitted electronically or on paper, will be made available for public viewing in EDOCKET as EPA receives them and without change, unless the comment contains copyrighted material, confidential business information (CBI), or other information whose public disclosure is restricted by statute. When EPA identifies a comment containing copyrighted material, EPA will provide a reference to that material in the version of the comment that is placed in EDOCKET. The entire printed comment, including the copyrighted material, will be available in the public docket. Although identified as an item in the official docket, information claimed as CBI, or whose disclosure is otherwise restricted by statute, is not included in the official public docket, and will not be available for public viewing in EDOCKET. For further information about the electronic docket, see EPA's **Federal Register** notice describing the electronic docket at 67 FR 38102 (May 31, 2002), or go to *http://www.epa.gov./edocket.*

Affected entities: Entities potentially affected by this action are refiners, importers, pipelines, petroleum marketers and other distributors of diesel fuel, terminal, fuel oil dealers, fuel additive manufacturers, and petroleum retailers and wholesale purchaser-consumers.

Title: Recordkeeping and Reporting Requirements for the Fuel Quality Regulations for Diesel Fuel Sold in 2001 and Later Years; and for Tax-Exempt (Dyed) Diesel Fuel.

Abstract: This renewal includes recordkeeping and reporting under two existing and related ICRs that will expire on September 30, 2004. These are the fuel quality regulations for diesel fuel sold in 2001 and later years (covered by current EPA ICR No. 1718.04) and the recordkeeping and reporting requirements related to tax-exempt (dyed) diesel fuel (covered by current EPA ICR No. 1718.03). These are described in summary in the following paragraphs and in detail in the draft Supporting Statement, which has been placed in the public docket.

Summary of Recordkeeping and Reporting Related to the Fuel Quality Regulations for Diesel Fuel Sold in 2001 and Later Years

The pollution emitted by diesel engines contributes greatly to our nation's continuing air quality problems. On January 18, 2001, EPA published a final rule that would establish standards for heavy-duty engines and vehicles and for highway diesel sulfur control. New emissions standards for these engines and vehicles will apply starting with model year 2007. Since the new technology developed will require low sulfur diesel fuel (15 parts per million sulfur or less), the regulations require the availability of this fuel starting by no later than 2006, with all highway diesel fuel required to meet the 15 parts per million standard by 2010.[1]

The information under this ICR will be collected by EPA's Transportation and Regional Programs Division, Office of Transportation and Air Quality, Office of Air and Radiation (OAR), and by EPA's Air Enforcement Division, Office of Regulatory Enforcement, Office of Enforcement and Compliance Assurance (OECA). The information collected will be used by EPA to evaluate compliance with diesel sulfur control requirements under the diesel rule. This oversight by EPA is necessary to ensure attainment of the air quality goals of the diesel program.

The scope of the recordkeeping and reporting requirements for each type of party (and therefore the cost to that party), reflects the party's opportunity to create, control or alter the sulfur content of diesel fuel. As a result, refiners and importers will generally have more requirements than parties downstream from the diesel production or import point. Refiners and importers are required to register with EPA and to submit annual pre-compliance reports on June 1st of 2003, 2004, and 2005. Those refiners and importers who generate credits must submit credit-related annual reports starting in 2006 or the first year credits are generated (whichever is earlier). All refiners and importers must submit annual reports including compliance information for 2006 through 2010. EPA has made every effort to minimize registration and reporting burdens and to ensure that parties do not have to submit duplicate information. For example, refiners and importers who have already registered with EPA for compliance with other fuels programs are not required to re-register for this program.

Parties are required to generate and retain product transfer documents, which are documents normally and customarily generated in the course of business. These product transfer documents typically use simplified, software-generated product codes. Product transfer documents must be retained for five years.

Regulated parties are required to retain records of any quality assurance testing they may perform on diesel fuel and such records would be normally and customarily retained in the course of business.

A party may apply for relief from regulatory requirements under extreme and unforseen circumstances (*e.g.* a

[1] *See* ''Control of Air Pollution from New Motor Vehicles: Heavy-Duty Engine and Vehicle Standards and Highway Diesel Fuel Sulfur Control Requirements,'' 66 FR 5002 (January 18, 2001).

refinery fire or flood) or may apply for an exemption to conduct research and development activities. We expect few applications under these provisions. We have made every effort to ensure that the application process is simple and requires only necessary information to make a decision as to whether to grant or deny a request.

Summary of Recordkeeping and Reporting Related to the Dyeing of Tax-Exempt Diesel Fuel

Diesel fuel not intended for use in motor vehicles (off-road diesel fuel) is required to be dyed red in order to distinguish it from motor vehicle diesel fuel. The Internal Revenue Service requires that tax-exempt motor vehicle diesel fuel also be dyed red. To distinguish off-road diesel fuel from tax-exempt motor vehicle diesel fuel, parties in the fuel distribution system must refer to the product transfer document. Product transfer documents are normally and customarily generated in the course of business and typically use simplified, software generated codes. Product transfer documents must be retained for five years.[2]

An agency may not conduct or sponsor, and a person is not required to respond to, a collection of information unless it displays a currently valid OMB control number. The OMB control numbers for EPA's regulations in 40 CFR are listed in 40 CFR part 9.

The EPA would like to solicit comments to:

(i) evaluate whether the proposed collection of information is necessary for the proper performance of the functions of the Agency, including whether the information will have practical utility;

(ii) evaluate the accuracy of the Agency's estimate of the burden of the proposed collection of information, including the validity of the methodology and assumptions used;

(iii) enhance the quality, utility, and clarity of the information to be collected; and

(iv) minimize the burden of the collection of information on those who are to respond, including through the use of appropriate automated electronic, mechanical, or other technological collection techniques or other forms of information technology, *e.g.*, permitting electronic submission of responses.

Burden Statement: It is estimated that there will be 420,685 reports, 39,575 burden hours, and total annual costs (labor, overhead and maintenance, and purchased services) of $7,522,375. Burden means the total time, effort, or financial resources expended by persons to generate, maintain, retain, or disclose or provide information to or for a Federal agency. This includes the time needed to review instructions; develop, acquire, install, and utilize technology and systems for the purposes of collecting, validating, and verifying information, processing and maintaining information, and disclosing and providing information; adjust the existing ways to comply with any previously applicable instructions and requirements; train personnel to be able to respond to a collection of information; search data sources; complete and review the collection of information; and transmit or otherwise disclose the information. The estimated burden in explained in detail on pages 22–30 of the draft Supporting Statement, which has been placed in docket OAR–2004–0051 and which is available via the EDOCKET and at the address listed in the **ADDRESSES** section, above. Other helpful information, including the final Supporting Statements for the expiring ICR Nos. 1718.03 and 1718.04, have also been placed in the docket in order to assist the public in commenting on this renewal.

Dated: May 3, 2004.

Suzanne Rudzinski,

Director, Transportation and Regional Programs Division, Office of Transportation and Air Quality.

[FR Doc. 04–11117 Filed 5–14–04; 8:45 am]

BILLING CODE 6560–50–P

[2] See 40 CFR 80.29(c).

ENVIRONMENTAL PROTECTION AGENCY

[FRL–7662–7, Docket ID No. A–94–34]

Clean Air Act Advisory Committee: Notice Soliciting Interest in Participating on a Task Force on the Performance of the Title V Operating Permits Program

AGENCY: Environmental Protection Agency (EPA).

ACTION: Notice.

SUMMARY: Under the Federal Advisory Committee Act, 5 U.S.C. Appendix 2 (Pub. L. 92–463), EPA announces the formation of a work group to be known as the Title V Task Force. This task force will seek input from the public including industry, State, and local air pollution control agencies, and environmental interest groups, on the performance of the title V operating permits programs. The ultimate goal of the title V task force will be to draft a report for consideration of the Permitting/Toxics Subcommittee to the Clean Air Act Advisory Committee (CAAAC) to document how the title V program is performing and what elements are working well and/or poorly. The draft report may include suggestions on how to improve the program.

Through this notice, EPA solicits individuals to participate as members of the task force. We are looking for 12 to 24 individuals willing to attend at least three all-day meetings throughout the United States, participate in a number of conference calls, and participate in drafting the report to the subcommittee.

In addition, we are announcing three all-day public meetings of the task force. The first meeting will be held in late June in the Washington, DC, area. The second meeting will probably be held in mid-September in the Chicago area. The third meeting will likely be held in late January 2005 in a western location such as Phoenix, Arizona.

FOR FURTHER INFORMATION CONTACT: Mr. Ray Vogel, Information Transfer and Program Implementation Division, Office of Air Quality Planning and Standards, Mail Code C304–04, U.S. Environmental Protection Agency, Research Triangle Park, North Carolina 27711; telephone (919) 541–3153; fax number: (919) 541–5509; and e-mail address: *vogel.ray@epa.gov.*

SUPPLEMENTARY INFORMATION:

A. What Is the Purpose of This Notice and Task Force?

The purpose of this notice is to announce an EPA effort to gather information from stakeholders on the performance of the title V operating permits program. Specifically, this notice has two purposes: (1) To solicit interest in participation on an EPA-chaired task force formed to investigate this performance, and (2) to announce a series of all-day public meetings that will be held by this task force.

When Congress amended the Clean Air Act (Act) in 1990, it established an operating permits program in title V of the Act. Title V mandates that EPA establish minimum standards for an operating permits program for major and certain other stationary sources of air pollution. In 1992 and 1996, EPA promulgated regulations setting forth minimum requirements for State, local, and Tribal operating permits programs (40 CFR part 70) and for the Federal operating permits program (40 CFR part 71).

Almost 12 years have passed since EPA promulgated the initial regulations for this program. To better fulfill its oversight responsibilities, as envisioned by Congress, EPA now wants to assess the effectiveness of this program. The Permitting/Toxics Subcommittee of the

CAAAC, a group of stakeholders that advise EPA on air environmental issues, plans to convene a task force that will report to the subcommittee on the experiences of stakeholders who have been working in the title V permitting arena (*i.e.*, a ''state of the title V programs'' report). The draft report should reflect the perspectives of all stakeholder groups and should reflect an effort to answer two questions: (1) How well is the title V program performing, and (2) what elements of the program are working well/poorly? To satisfy these goals, the subcommittee is setting up a task force for this purpose. The task force will be made up of EPA and title V stakeholders and will host at least three public meetings to obtain information from stakeholders about how the program has been implemented.

B. How Do I Become a Member of the Task Force and What Is Required of Members?

The EPA is looking for a 12 to 24 member task force with balanced participation from industry, State/local agencies, and environmental groups. For industry, we are interested in plant personnel with direct title V experience and those who assist these personnel with title V permitting. For environmental groups, we are interested in organizations and members of the public with title V experience. The time commitment and duties for task force members will involve at least three all-day meetings to be held throughout the U.S. and include preparation and post-meeting duties. Duties will include preparing for and attending all meetings, sharing your own title V experiences, engaging with other meeting attendees, and assisting with drafting the report. Conference calls could be required in addition to the meetings.

The best candidates for the task force will be those with direct experience in title V permits and their implementation, those able to represent views of others in your stakeholder group (for example, a State or local agency having membership in a regional planning organization such as Northeast States for Coordinated Air Use Management or Western States Air Resources Council) and those who can commit to traveling to all three meetings. The EPA does not have funding to pay for travel. Please note that if you cannot be on the task force, but you have title V permitting experiencies to share, we still encourage your participation in one of the three public meetings.

If you are interested in being considered for this task force, please submit your name, organization, telphone number, e-mail address, a short statement of your interest and qualifications, and your ability to fulfill the duties of the task force to Ray Vogel (see **FOR FURTHER INFORMATION CONTACT** section) within 2 weeks of the date of this notice.

C. How Do I Participate in the Public Meetings?

We will post the day, time, and location of each meeting on the CAAAC Web site: *www.epa.gov/oar/caaac/*. We invite anyone with title V experience to share their perspectives with the task force at these meetings. The agenda will consist of hearing from each attendee and any questions the task force might have. Attendees will register when they arrive and be given a number. After some brief logistical remarks by the task force chair (no formal remarks will be made by the task force), we will call on the first registrant and proceed until we have heard from all attendees. Each attendee will be given 5 minutes to speak followed by time for the task force to ask questions or seek clarifications. People wishing to speak are encouraged to submit a brief summary of their title V experiences to Ray Vogel (see **FOR FURTHER INFORMATION CONTACT** section) 2 weeks before the meeting, and you should bring a copy to submit at the public meeting. The meeting will be recorded and a transcript will be made and placed in the public docket. In your remarks, we ask that you focus on your experiencies of what is working well in the title V program, what you feel is not working well and, if you choose, what remedy you recommend and how it would correct the concern(s) you identified. We encourage participants to give actual examples of your experiencies with title V implementation including what is working well.

D. How Do I Find Out About These Public Meetings?

The EPA plans for at least three public meetings. The first is being planned for late June in the Washington, DC, area; the second in mid-September in Chicago; and the third next winter, likely late January 2005, in Phoenix, Arizona. You are requested to access the CAAAC Web site at *www.epa.gov/oar/caaac/* for the dates and logistics of all future meetings. You may also contact Ray Vogel at (919) 541–3153.

E. How Do I Get Copies of the Draft Report of the Task Force and Other Public Information Related to the Task Force's Work?

The EPA has established a public docket for the CAAAC under docket ID No. A–94–34. The official public docket will consist of documents specifically related to the activities of the task force, including **Federal Register** notices, any written public comments received at the meetings, transcripts of public meetings, and the draft report of the task force. The public docket does not include confidential business information or any other information for which public disclosure is restricted by statute, and thus, you should not submit such information for the docket. The official public docket is a collection of materials available for public viewing at the Air Docket in the EPA Docket Center, (EPA/DC) EPA West, Room B102, 1301 Constitution Avenue, NW., Washington, DC. The EPA Docket Center Public Reading Room is open from 8:30 a.m. to 4:30 p.m., Monday through Friday, excluding legal holidays. The telephone number for the Reading Room is (202) 566–1744, and the telephone number for the Air Docket is (202) 566–1742. A reasonable fee may be charged for copying.

Dated: May 6, 2004.

Gregory A. Green,

Acting Director, Office of Air Quality Planning and Standards.

[FR Doc. 04–11113 Filed 5–14–04; 8:45 am]

BILLING CODE 6560–50–P

ENVIRONMENTAL PROTECTION AGENCY

[FRL–7663–1]

Description of Program Changes for the National Environmental Performance Track

AGENCY: Environmental Protection Agency(EPA).

ACTION: Notice.

SUMMARY: This notice describes program changes for the National Environmental Performance Track program (''Performance Track''). These changes reflect experience gained during the program's first three years of implementation, and are intended to improve the quality and effectiveness of the Performance Track program.

ADDRESSES: Office of Policy, Economics, and Innovation, U.S. EPA, Performance Incentives Division, Ariel Rios Building, Mailcode 1808T, 1200 Pennsylvania Avenue NW., Washington, DC 20460. Additional information may be found at

the Performance Track Web site at *http://www.epa.gov/performancetrack* or at the Performance Track Information Center 1–888–339–PTRK (7875).

FOR FURTHER INFORMATION CONTACT: Michael Branagan, Office of Policy, Economics, and Innovation, 202–566–2836 or by e-mail at *branagan.michael@epa.gov.*

SUPPLEMENTARY INFORMATION:

I. Introduction
II. Program Changes
A. Defining Small Facilities
B. Independent Assessment of the EMS
C. Challenge Commitment Policy
III. Advanced Notice of Additional Changes
Corporate Membership

I. Introduction

On June 26, 2000, The Environmental Protection Agency (EPA) launched the National Environmental Performance Track program (''Performance Track''). The program is designed to recognize and encourage top environmental performers—those who go beyond compliance with regulatory requirements to attain levels of environmental performance and management that benefit people, communities, and the environment. The program design was published in the **Federal Register** on July 6, 2000 (65 FR 41655).

While initial design of the Performance Track program was successful during the first three years of program implementation, experience has shown that some aspects of the design could be improved to better meet program goals. These improvements include broadening and deepening program membership, enhancing the program's value for creating a standard of achievement for its members, and promoting innovative performance-based approaches to protecting the environment. The following section describes these Performance Track program improvements. The program changes will become effective starting with those facilities applying to the program during the application period which began on February 1, 2004.

II. Program Changes

A. Defining Small Facilities

Currently, Performance Track defines a facility as small if the company, as a whole, is both a small business as defined by the Small Business Administration (65 FR 30386, May 15, 2000), and the facility itself employs fewer than fifty full-time employees. Currently the Small Business Administration defines a small business as having fewer than 500 employees. Small facilities participate in the Performance Track program by demonstrating past achievements in one environmental aspect, rather than the two required by larger facilities, and with two future performance commitments rather than the four required for larger facilities.

To promote participation by small facilities, the EPA has changed the small facility designation to include any facility with fewer than fifty full-time employees. This provision would encourage small facilities in larger companies to participate in Performance Track. This re-definition removes the above Small Business Administration criterion. The requirement for small facilities to demonstrate past achievements in one environmental aspect and with two future performance commitments remains unchanged.

B. Independent Assessment of the EMS

The EPA is adding a criterion that applicants to Performance Track not certified under ISO 14001 conduct an independent assessment of the facility's Environmental Management System (EMS) within three years prior to application.

The EPA believes that an independent assessment will increase the public'sconfidence in the quality of the EMS, and the Performance Track membership, without imposing much additional work or expense on potential applicants.

Independent assessments will not require formal third-party certification. New Performance Track facilities can select from a number of options for an independent party assessment of their EMS, including a pre-acceptance site visit conducted by the EPA, assessment by a qualified auditor, or a corporate audit, among others.

More details on the independent assessment criteria are available on the Performance Track Web site at *http://www.epa.gov/performancetrack.*

C. Challenge Commitment Policy

The EPA recognizes that environmental priorities vary by region. For example, water efficiency may be especially important in one region, while urban air quality may be a top priority in another. The EPA also recognizes that Performance Track facilities have the potential to help address local and regional environmental priorities.

In order to challenge Performance Track member facilities to respond to regional environmental priorities while also addressing their own significant environmental aspects, renewing Performance Track members can receive double credit for addressing a regional environmental priority in their performance commitments. The EPA Regions will have the discretion to designate ''Challenge Commitments'' that correspond to regional environmental priorities.

In deciding whether to use a ''Challenge Commitment'', the EPA believes that facilities should focus first on those environmental aspects that are affected by their individual activities. Performance Track applicants should then determine whether potential performance commitments, with related objectives and targets as identified in their EMS's, also align with EPA Regional environmental priorities.

A renewing Performance Track member making a Challenge Commitment may, with the agreement of the relevant EPA Regional office, count that single commitment as two future performance commitments. Thus, such a facility need only make three future commitments, rather than the normal four, so long as one of the commitments addresses a regional priority.

The Challenge commitment option will only be available to larger facilities, because small facilities already are allowed a reduced number of commitments.

Challenge commitments will be chosen by the EPA Regional offices in consultation with state and local governments. Regional offices may choose not to establish a challenge commitment. When designating a challenge commitment, a Region will identify no more than one category (*e.g.* Air Emissions, Discharges to Water, etc.) and no more than two environmental aspects (*e.g.* NO_X, SO_X, etc.) within that category. The commitment must have a minimum quantitative target and will be memorialized in a memorandum to the EPA Headquarters from the Regional Administrator.

III. Advanced Notice of Additional Changes

Corporate Membership

The EPA will enhance the current Performance Track program by adding a corporate recognition component for companies that participate substantially in the facility program and whose performance, practices, and policies at a corporate level meet criteria associated with environmental excellence.

The establishment of a corporate designation within Performance Track will allow the Performance Track program to more effectively engage corporate leaders and promote the goals of the program, while giving the EPA an opportunity to encourage and recognize

corporate leadership. Additionally, corporate membership will allow the EPA to explore broad and innovative approaches to achieving environmental benefits stemming from corporate-level decisions, such as supply chain management and product stewardship.

The criteria for corporate members are expected to include: participation by a substantial number of their facilities in Performance Track or similar State programs and commitment to increase this participation over time. The EPA believes this link between the corporate and facility programs will encourage stronger corporate-level commitment to Performance Track and performance excellence. Other criteria would parallel those that Performance Track currently applies to facilities, with a greater emphasis on companies working with their suppliers and customers to achieve environmental improvements.

EPA expects to solicit applications for this program later in 2004.

Dated: April 27, 2004.

Jessica Furey,

Associate Administrator, Office of Policy, Economics and Innovation.

[FR Doc. 04–11111 Filed 5–14–04; 8:45 am]

BILLING CODE 6560–50–P

ENVIRONMENTAL PROTECTION AGENCY

[FRL–7662–5]

Meeting of the Mobile Sources Technical Review Subcommittee

AGENCY: Environmental Protection Agency (EPA).

ACTION: Notice of meeting.

SUMMARY: Pursuant to the Federal Advisory Committee Act, Public Law 92–463, notice is hereby given that the Mobile Sources Technical Review Subcommittee (MSTRS) will meet in June 2004. This is an open meeting. The meeting will include updates on workgroup activities, a discussion of technical issues associated with the proposed Locomotive/Marine diesel engine Rule, and a presentation on powertrain engineering and hydraulic hybrid research being conducted at EPA's National Vehicle and Fuel Emissions Laboratory. The preliminary agenda for the meeting, as well as the minutes from the previous (December 2003) meeting will be posted on the Subcommittee's Web site: *http://www.epa.gov/air/caaac/mobile_sources.html.* MSTRS listserver subscribers will receive notification when the agenda is available on the Subcommittee Web site. To subscribe to the MSTRS listserver, go to *https://lists.epa.gov/cgi-bin/lyris.pl?enter=mstrs.* The site contains instructions and prompts for subscribing to the listserver service.

DATES: Wednesday, June 9, 2004 from 9 a.m. to 4 p.m. Registration begins at 8:30 a.m.

ADDRESSES: The meeting will be held at the National Vehicle and Fuel Emissions Laboratory, 2000 Traverwood Drive, Ann Arbor, Michigan 48105, (734) 214–4311.

FOR FURTHER INFORMATION CONTACT: *For technical information:* Dr. L. Joseph Bachman, Designated Federal Officer, Transportation and Regional Programs Division, Mailcode 6406J, U.S. EPA, 1200 Pennsylvania Avenue, NW., Washington, DC 20460; Ph: 202–343–9373; e-mail: *bachman.joseph@epa.gov.*

For logistical and administrative information: Ms. Kimberly Derksen, FACA Management Officer, U.S. EPA, 2000 Traverwood Drive, Ann Arbor, Michigan 48105, Ph: 734–214–4272; FAX: 731–214–4958; e-mail: *derksen.kimberly@epa.gov.*

Background on the work of the Subcommittee is available at *http://transaq.ce.gatech.edu/epatac/,* and more current information is found at: *http://www.epa.gov/air/caaac/mobile_sources.html.*

Individuals or organizations wishing to provide comments to the Subcommittee should submit them to Dr. Bachman at the address above by June 4, 2004. The Subcommittee expects that public statements presented at its meetings will not be repetitive of previously submitted oral or written statements.

SUPPLEMENTARY INFORMATION: During the meeting, the Subcommittee may also hear progress reports from some of its workgroups as well as updates and announcements on activities of general interest to attendees.

Margo Tsirigotis Oge,

Director, Office of Transportation and Air Quality.

[FR Doc. 04–11116 Filed 5–14–04; 8:45 am]

BILLING CODE 6560–50–P

ENVIRONMENTAL PROTECTION AGENCY

[FRL–7662–9]

Science Advisory Board Staff Office; Notification of Upcoming Science Advisory Board Meetings

AGENCY: Environmental Protection Agency.

ACTION: Notice.

SUMMARY: The Environmental Protection Agency (EPA), Science Advisory Board (SAB) Staff Office is announcing public meetings of the SAB Contaminated Sites and RCRA Multi-Year Plan Advisory Panel (CS and RCRA Panel), and the SAB Environmental Engineering Committee (EEC).

A. SAB CS and RCRA Panel Meetings

June 10, 2004. The SAB CS and RCRA Panel will meet by conference call from 2 p.m. to 5 p.m. (eastern time). The purpose of this call is to provide the Panel with an overview of the EPA's Resource Conservation and Recovery Act Multi-Year Plan and its Contaminated Sites Multi-Year Plan. The charge to the Panel will be presented and discussed on this call.

June 17, 2004. The SAB CS and RCRA Panel will meet by conference call from 2 p.m. to 5 p.m. (eastern time). The purpose of this call is to provide briefings relating to the two Multi-Year Plans that will help orient the Panel to the material.

June 24, 2004. The SAB CS and RCRA Panel will meet by conference call from 2 p.m. to 5 p.m. (eastern time). The purpose of this call is to continue the overview of the two Multi-Year Plans and to provide additional briefings relating to the two Multi-Year Plans to orient the Panel to the material.

July 7–9, 2004. The SAB CS and RCRA Panel will meet face-to-face starting Wednesday July 7 at 9:00, adjourning no later than 4 p.m. (eastern time) Friday July 9. The purpose of this meeting is to complete the Panel's advisory on the two multi-year plans.

August 5, 2004. The SAB CS and RCRA Panel will meet by conference call from 2 p.m. to 5 p.m. (eastern time). The purpose of this call is to finalize its advisory report on the two Multi-Year Plans.

B. SAB EEC Meeting.

July 6, 2004. The EEC will meet face-to-face from 1 p.m. to 5 p.m. (eastern time) to discuss potential FY2005 activities.

ADDRESSES: Participation in the teleconference meetings will be by teleconference only—a meeting room will not be used. The face-to-face meetings will be held at the Science Advisory Board Conference Center located at 1025 F Street, NW., Suite 3705, Washington, DC 20004.

FOR FURTHER INFORMATION CONTACT: Members of the public who wish to obtain the call-in number and access code to participate in the teleconference meetings may contact the EPA Science Advisory Board Staff at (202) 343–9999

by the Monday preceding the conference call. Any member of the public wishing further information may contact Ms. Kathleen White, Designated Federal Officer (DFO), via telephone/voice mail at (202) 343–9878, via e-mail at *white.kathleen@epa.gov*, or by mail at U.S. EPA SAB (1400F), 1200 Pennsylvania Ave., NW., Washington, DC, 20460. General information about the SAB can be found in the SAB Web Site at: *http://www.epa.gov/sab.*

SUPPLEMENTARY INFORMATION:

Background on the Advisories: The EPA Office of Research and Development (ORD) has developed multi-year plans (MYPs) on selected topics to focus its research program on the highest priority issues and provide coordination for achieving long-term research goals. The Contaminated Sites MYP describes ORD problem-driven research supporting three Office of Solid Waste and Emergency Response (OSWER) trust fund programs for which research is authorized: Superfund (SF), Leaking Underground Storage Tank Corrective Action (LUST CA) and the Oil Spills Program. Contaminated Sites research is aligned in four long-term goals, with three of the goals based on the affected medium—sediment, ground water, and soil/land—and one goal for cross-cutting issues. The Resource Conservation and Recovery Act (RCRA) MYP focuses primarily on treatment processes for hard-to-treat chemicals; innovative containment technologies; resource conservation; and site-specific technical support and state-of-the-art methods, tools, and models for addressing priority RCRA management issues. ORD has requested an advisory from the SAB as to the soundness of the research plans.

The SAB Staff Office has determined that the advisory on these MYPs will be conducted by the SAB's Environmental Engineering Committee supplemented with experts from the SAB Ecological Processes and Effects Committee and the EPA Board of Scientific Counselors. Collectively these individuals will form the SAB Contaminated Sites and RCRA Multi-Year Plan Advisory Panel. A Panel roster and biosketches will be posted on the SAB Web Site at: *http://www.epa.gov/sab.* Public comment on the Panel will be accepted until June 7, 2004.

Availability of Meeting Materials: EPA ORD's *Contaminated Sites Research Program Multi-Year Plan* and *Resource Conservation and Recovery Act Research Program Multi-Year Plan* will be available electronically at the following URL address: *http://www.epa.gov/osp/myp.htm.* For information and any questions pertaining to the review documents, please contact Ms. Patricia Erickson, EPA-ORD, via telephone: (513) 569–7406 or e-mail: *erickson.patricia@epa.gov.*

Draft meeting agendas and the charge to the SAB CS and RCRA Panel will be posted on the SAB Web Site prior to the public meetings at: *http://www.epa.gov/sab.*

Procedures for Providing Public Comments. It is the policy of the SAB Staff Office to accept written public comments of any length, and to accommodate oral public comments whenever possible. The SAB expects that public statements presented at the meeting will not be repetitive of previously submitted oral or written statements. *Oral Comments:* In general, each individual or group requesting an oral presentation at a face-to-face meeting will be limited to a total time of ten minutes (unless otherwise indicated). Interested parties should contact the DFO in writing (email, fax or mail—see contact information above) by close of business the Thursday before the meeting in order to be placed on the public speaker list for the meeting. Speakers should bring at least 35 copies of their comments and presentation slides for distribution to the participants and the public at the meeting. *Written Comments:* Although written comments are accepted until the date of the meeting, written comments should be received in the SAB Staff Office at least one week prior to the meeting date so that the comments may be made available to the panel for their consideration. Comments should be supplied to the DFO at the address/contact information noted above in the following formats: one hard copy with original signature, and one electronic copy via e-mail (acceptable file format: Adobe Acrobat, WordPerfect, Word, or Rich Text files (in IBM-PC/Windows 95/98 format). Those providing written comments and who attend the meeting are also asked to bring 35 copies of their comments for public distribution.

Meeting Accommodations: Individuals requiring special accommodation to access this meeting, should contact the DFO at least five business days prior to the meeting so that appropriate arrangements can be made.

Dated: May 12, 2004.

Vanessa T. Vu,

Director, EPA Science Advisory Board Staff Office.

[FR Doc. 04–11112 Filed 5–14–04; 8:45 am]

BILLING CODE 6560–50–P

FEDERAL RESERVE SYSTEM

Change in Bank Control Notices; Acquisition of Shares of Bank or Bank Holding Companies

The notificants listed below have applied under the Change in Bank Control Act (12 U.S.C. 1817(j)) and § 225.41 of the Board's Regulation Y (12 CFR 225.41) to acquire a bank or bank holding company. The factors that are considered in acting on the notices are set forth in paragraph 7 of the Act (12 U.S.C. 1817(j)(7)).

The notices are available for immediate inspection at the Federal Reserve Bank indicated. The notices also will be available for inspection at the office of the Board of Governors. Interested persons may express their views in writing to the Reserve Bank indicated for that notice or to the offices of the Board of Governors. Comments must be received not later than June 1, 2004.

A. Federal Reserve Bank of Cleveland (Nadine W. Wallman, Assistant Vice President) 1455 East Sixth Street, Cleveland, Ohio 44101–2566:

1. The Dlesk Family (Rosalie J. Dlesk, Sylvan J. Dlesk, Randall Dlesk and Jane Dlesk), Wheeling, West Virginia; to acquire additional voting shares of First West Virginia Bancorp, Inc., Wheeling, West Virginia, and thereby indirectly acquire additional voting shares of Progressive Bank, National Association, Wheeling, West Virginia.

Board of Governors of the Federal Reserve System, May 11, 2004.

Robert deV. Frierson,

Deputy Secretary of the Board.

[FR Doc. 04–11047 Filed 5–14–04; 8:45 am]

BILLING CODE 6210–01–S

FEDERAL RESERVE SYSTEM

Formations of, Acquisitions by, and Mergers of Bank Holding Companies

The companies listed in this notice have applied to the Board for approval, pursuant to the Bank Holding Company Act of 1956 (12 U.S.C. 1841 *et seq.*) (BHC Act), Regulation Y (12 CFR Part 225), and all other applicable statutes and regulations to become a bank holding company and/or to acquire the assets or the ownership of, control of, or the power to vote shares of a bank or bank holding company and all of the banks and nonbanking companies owned by the bank holding company, including the companies listed below.

The applications listed below, as well as other related filings required by the Board, are available for immediate

inspection at the Federal Reserve Bank indicated. The application also will be available for inspection at the offices of the Board of Governors. Interested persons may express their views in writing on the standards enumerated in the BHC Act (12 U.S.C. 1842(c)). If the proposal also involves the acquisition of a nonbanking company, the review also includes whether the acquisition of the nonbanking company complies with the standards in section 4 of the BHC Act (12 U.S.C. 1843). Unless otherwise noted, nonbanking activities will be conducted throughout the United States. Additional information on all bank holding companies may be obtained from the National Information Center website at *www.ffiec.gov/nic/*.

Unless otherwise noted, comments regarding each of these applications must be received at the Reserve Bank indicated or the offices of the Board of Governors not later than June 10, 2004.

A. Federal Reserve Bank of Atlanta (Sue Costello, Vice President) 1000 Peachtree Street, N.E., Atlanta, Georgia 30303:

1. Flint River Bancshares, Inc., Camilla, Georgia; to become a bank holding company by acquiring 100 percent of the voting shares of Flint River National Bank, Camilla, Georgia (in organization).

Board of Governors of the Federal Reserve System, May 11, 2004.

Robert deV. Frierson,

Deputy Secretary of the Board.

[FR Doc. 04–11048 Filed 5–14–04; 8:45 am]

BILLING CODE 6210–01–S

FEDERAL TRADE COMMISSION

Agency Information Collection Activities; Proposed Collection; Comment Request; Extension

AGENCY: Federal Trade Commission (FTC or ''Commission'').

ACTION: Notice.

SUMMARY: The information collection requirements described below will be submitted to the Office of Management and Budget (OMB) for review, as required by the Paperwork Reduction Act (PRA). The FTC is seeking public comments on its proposal to extend through August 31, 2007, the current PRA clearance for information collection requirements contained in its regulations under the Comprehensive Smokeless Tobacco Health Education Act of 1986 (''Smokeless Tobacco Act'' or the ''Act''). That clearance expires on August 31, 2004.

DATES: Comments must be submitted on or before July 16, 2004.

ADDRESSES: Interested parties are invited to submit written comments. Comments should refer to ''Smokeless Tobacco Regulations: Paperwork Comments, [R001009]'' to facilitate the organization of comments. A comment filed in paper form should include this reference both in the text and on the envelope, and should be mailed or delivered to the following address: Federal Trade Commission/Office of the Secretary, Room H–159, 600 Pennsylvania Avenue, NW., Washington, DC 20580. If the comment contains any material for which confidential treatment is requested, it must be filed in paper (rather than electronic) form, and the first page of the document must be clearly labeled ''Confidential.''[1] The FTC is requesting that any comment filed in paper form be sent by courier or overnight service, if possible, because U.S. postal mail in the Washington area and at the Commission is subject to delay due to heightened security precautions.

The FTC Act and other laws the Commission administers permit the collection of public comments to consider and use in this proceeding as appropriate. All timely and responsive public comments, whether filed in paper or electronic form, will be considered by the Commission, and will be available to the public on the FTC Web site, to the extent practicable, at *http://www.ftc.gov.* As a matter of discretion, the FTC makes every effort to remove home contact information for individuals from the public comments it receives before placing those comments on the FTC Web site. More information, including routine uses permitted by the Privacy Act, may be found in the FTC's privacy policy, at *http://www.ftc.gov/ftc/privacy.htm.*

FOR FURTHER INFORMATION CONTACT: Requests for additional information or copies of the proposed information requirements should be addressed to Rosemary Rosso, Attorney, Division of Advertising Practices, Bureau of Consumer Protection, Federal Trade Commission, Washington, DC 20580, (202) 326–2174.

SUPPLEMENTARY INFORMATION: Under the PRA (44 U.S.C. 3501–3520), Federal agencies must obtain approval from OMB for each collection of information they conduct or sponsor. ''Collection of information'' means agency requests or requirements that members of the public submit reports, keep records, or provide information to a third party. 44 U.S.C. 3502(3); 5 CFR 1320.3(c). As required by section 3506(c)(2)(A) of the PRA, the FTC is providing this opportunity for public comment before requesting that OMB extend the existing paperwork clearance for the Smokeless Tobacco Act regulations (OMB Control Number 3084–0082).[2]

The FTC invites comments on: (1) Whether the proposed collection of information is necessary for the proper performance of the functions of the agency, including whether the information will have practical utility; (2) the accuracy of the agency's estimate of the burden of the proposed collection of information, including the validity of the methodology and assumptions used; (3) ways to enhance the quality, utility, and clarity of the information to be collected; and (4) ways to minimize the burden of the collection of information on those who are to respond, including through the use of appropriate automated, electronic, mechanical, or other technological collection techniques or other forms of information technology, *e.g.,* permitting electronic submission of responses.

Description of the collection of information and proposed use: The Smokeless Tobacco Act requires that manufacturers, packagers, and importers of smokeless tobacco products include one of three specified health warnings on packages and in advertisements. The Act also requires that each manufacturer, packager, and importer of smokeless tobacco products submit a plan to the Commission specifying the method to rotate, display, and distribute the warning statement required to appear in advertising and labeling. The Commission is required by the Act to determine that these plans provide for rotation, display, and distribution of warnings in compliance with the Act and implementing regulations. To the best of the Commission's knowledge, all of the affected companies have previously filed plans. However, the plan submission requirement continues

[1] Commission rule 4.2(d), 16 CFR 4.2(d). The comment must be accompanied by an explicit request for confidential treatment, including the factual and legal basis for the request, and must identify the specific portions of the comment to be withheld from the public record. The request will be granted or denied by the Commission's General Counsel, consistent with applicable law and the public interest. *See* Commission Rule 4.9(c), 16 CFR 4.9(c).

[2] The Commission seeks comment on the costs and burdens imposed by the existing smokeless tobacco regulations. In March 2000, the Commission commenced a regulatory review of its smokeless tobacco regulations to determine whether there is a continuing need for the regulations and, if so, what revisions, if any, should be made. 65 FR 11944 (Mar. 7, 2000). If the Commission determines that the regulations should be amended, it will commence a rulemaking proceeding. Should any resulting amendments materially affect PRA burden, the Commission will notify OMB and seek amended clearance.

to apply to a company that amends its plan, or to a new company that enters the market.

Burden statement:

Estimated annual hours burden: 1,000 hours (rounded). The FTC is retaining its existing burden estimated of 1,000 hours. This amount is based on the burden previously estimated for 14 smokeless tobacco companies to prepare and submit amended compliance plans, and to permit at least three new companies to submit initial compliance plans. Though staff's calculations underlying the estimate totaled 560 hours, staff then conservatively rounded up its estimate to 1,000 hours. Staff firmly believes that this prior rounded estimate will fully incorporate any incremental effects of an additional three companies submitting plans.

Virtually all affected companies long ago filed their plans with the Commission. Additional annual reporting burdens would occur only if those companies opt to change the way they display the warnings required by the Smokeless Tobacco Act. Although it is not possible to predict whether any of the companies will seek to amend an existing approval plan (and possibly none will), staff conservatively assumes that each of the 14 smokeless tobacco companies will file one amendment per year. This estimate is conservative because, over the past three years, the Commission has reviewed amended plans from only two companies,[3] and the Commission has not changed the relevant regulations.[4] The estimated time to prepare the amended plans submitted by these companies is less than 40 hours each. The only major amendment of an approved plan, occurring more than three years ago, required only 40 hours to prepare, which is considerably less time than individual companies spent preparing their initial plans. Commission staff believes it reasonable to assume that each of the 14 smokeless tobacco companies would spend no more than 40 hours to prepare an amended plan.

Commission staff also estimates that one smokeless tobacco manufacturer will file an initial plan, for an additional burden of approximately 150 hours. Over the past three years, only one company has submitted initial plans that together involve only two brands.[5] When the regulations were first proposed in 1986, representatives of the Smokeless Tobacco Council, Inc. indicated that the six companies it represented would require approximately 700 to 800 hours in total (133 hours each) to complete the initial required plans, involving multiple brands and multiple brand varieties. Staff assumed that other companies would require a little more time, on average, to complete their plans. Staff estimated that one smokeless tobacco company may file an initial plan, and it would require approximately 150 hours to complete the plan, and it believes this estimate remains reasonable.

In addition to the estimates above, the staff anticipates that in the next three years, up to two small importers or small single brand companies may submit initial plans, for an additional burden of approximately 80 hours. The Commission has received such plans in the past. Because these plans involved only a limited number of brands and no advertising, the estimated time to prepare the plans was very modest. Staff estimates that the two importers or small single brand companies who may submit initial plans will spend no more than 40 hours each to prepare the plans.

Based on these assumptions, the total annual hours burden should not exceed 1,000 hours. [(14 companies × 40 hrs. each) + (one company × 150 hrs.) + (2 companies × 40 hrs.) = 790 total hours, rounded to one thousand hours.]

Estimated annual labor cost burden: $103,000.

The total annualzied labor cost to these companies should not exceed $103,000. This is based on the assumption that management or attorneys will account for 80% of the esitmated 1,000 hours required to rewrite or amend the plans, at an hourly rate of $125, and that clerical support will account for the remaining time (20%) at an hourly rate of $15. [Management and attorneys' time (1,000 hrs. × 0.80 × $125 = $100,000) + clerical time (1,000 hrs. × 0.2 × $15 = $3,000).]

Estimated annual non-labor cost burden: $0 or minimal.

The applicable requirements impose minimal start-up costs. The companies may keep copies of their plans to ensure that labeling and advertising complies with the requirements of the Smokeless Tobacco Act. Such recordkeeping would require the use of office supplies, *e.g.,* file folders and paper, all of which the companies should have on hand in the ordinary course of their business.

While companies submitting initial plans may incur one-time capital expenditures for equipment used to print package labels in order to include the statutory health warnings or to prepare acetates for advertising, the warnings themselves disclose information completely supplied by the federal government. As such, the disclosure does not constitute a ''collection of information'' as it is defined in the regulations implementing the PRA, nor by extension, do the financial resources expended in relation to it constitute paperwork ''burden.'' *See* 5 CFR 1320.3(c)(2). Moreover, any expenditures relating to the statutory health warning requirements would likely be minimal in any event. As noted above, virtually all affected firms have already submitted approved plans. For these companies, there are no capital expenditures. After the Commission approves a plan for the display of the warnings required by the Smokeless Tobacco Act, the companies are required to make additional submissions to the Commission only if there is a change in the way that they choose to display the warnings. Once the companies have prepared plates to print the required warnings on their labels, there are no additional set-up costs associated with the display of the warnings in labeling. Similarly, once the companies have prepared acetates of the required warnings for advertising and promotional materials, there are no additional set-up costs associated with printing the warnings in those materials.

Finally, capital expenditures for small importer are likely to be *de minimis.* Both firms that submitted plans over the past three years used stickers to place the warnings on their packages. The stickered warnings could be generated with office equipments and supplies such as computers and labels, all of which the companies should have on hand in the ordinary course of their business. Because neither firm engaged in any advertising, no costs associated with advertising were incurred.

John D. Graubert,

Acting General Counsel.

[FR Doc. 04–11101 Filed 5–14–04; 8:45 am]

BILLING CODE 6750–01–M

[3] One of these companies also submitted its initial plans for two brands during this period. The burden estimate for the initial plans is calculated separately.

[4] Should the Commission amend the regulations in a manner that materially affects the burden under the PRA, it will notify OMB and seek amended clearance.

[5] One of the plans involved a single brand with two brand varieties. The other plan involved a single brand with a single brand variety.

DEPARTMENT OF HEALTH AND HUMAN SERVICES

Office of the Secretary

Meeting of the National Vaccine Advisory Committee

AGENCY: Department of Health and Human Services, Office of the Secretary.

ACTION: Notice.

SUMMARY: As stipulated by the Federal Advisory Committee Act, the Department of Health and Human Services (DHHS) is hereby giving notice that the National Vaccine Advisory Committee (NVAC) will hold a meeting. The meeting is open to the public.

DATES: The meeting will be held on June 1, 2004, from 9 am to 3:30 pm, and on June 2, 2004, from 9 am to 3:15 pm.

ADDRESSES: Department of Health and Human Services, Hubert H. Humphrey Building, 200 Independence Avenue, Room 705A, SW., Washington, DC 20201.

FOR FURTHER INFORMATION, CONTACT: Ms. Emma English, Program Analyst, National Vaccine Program Office, Department of Health and Human Services, Hubert H. Humphrey Building, 200 Independence Avenue, Room 725H, SW., Washington, DC 20201; (202) 690–5566.

SUPPLEMENTARY INFORMATION: Pursuant to section 2101 of the Public Service Act (42 U.S.C. 300aa–1), the Secretary of Health and Human Services was mandated to establish the National Vaccine Program (NVP) to achieve optimal prevention of human infectious diseases through immunization and to achieve optimal prevention against adverse reactions to vaccines. The Secretary designated the Assistant Secretary for Health to serve as the Director, NVP. The National Vaccine Advisory Committee (NVAC) was established to provide advice and make recommendations to the Director, NVP, on matters related to the program's responsibilities.

Topics to be discussed at the meeting include: Pandemic Influenza and the Pandemic Influenza Response and Preparedness Plan, the NVAC Influenza Working Group's preliminary assessment of domestic influenza issues/needs, and the Institute of Medicine's (IOM) vaccine safety review. Updates will be given on the NVAC Working Group on Public Participation and from the NVAC Vaccine Safety and Communications Subcommittee, the NVAC Futures Vaccines Subcommittee, and the NVAC Immunization Coverage Subcommittee. A tentative agenda will be made available May 20 for review on the NVPO Web site, *http://www.dhhs.gov/nvpo.*

Public attendance at the meeting is limited to space available. Individuals must provide a photo ID for entry into the Humphrey Building. Individuals who plan to attend and need special assistance, such as sign language interpretation or other reasonable accommodations, should notify the designated contact person. Members of the public will have the opportunity to provide comments at the meeting. Public comment will be limited to five minutes per speaker. Any members of the public who wish to have printed material distributed to NVAC members should submit materials to the Executive Secretary, NVAC, whose contact information is listed above prior to close of business May 25, 2004. Preregistration is required for both public attendance and comment. Any individual who wishes to attend the meeting and/or participate in the public comment session should email *nvac@osophs.dhhs.gov.*

Dated: May 10, 2004.

Bruce G. Gellin,

Director, National Vaccine Program Office, and Executive Secretary, National Vaccine Advisory Committee.

[FR Doc. 04–11033 Filed 5–14–04; 8:45 am]

BILLING CODE 4150–28–P

DEPARTMENT OF HEALTH AND HUMAN SERVICES

Centers for Disease Control and Prevention

[Program Announcement 04126]

Vital Statistics Re-engineering Program; Notice of Intent To Fund Single Eligibility Award

A. Purpose

The Centers for Disease Control and Prevention (CDC) announces the intent to fund fiscal year (FY) 2004 funds for a cooperative agreement program to enhance the ability of state-owned vital statistics systems to provide timely and high quality information to the National Vital Statistics System based on the newly-approved U.S. Standard Certificate for Birth and Death and the Report of Fetal Death. The Catalog of Federal Domestic Assistance number for this program is 93.066.

B. Eligible Applicant

Assistance will be provided only to a public or private non-profit organization whose primary mission is the support of state vital statistics and vital records programs. The National Vital Statistics System (NVSS) is one component of NCHS's health data collection program.

NCHS operates this System to fulfill its legislatively mandated mission to produce national vital statistics based on data from the nation's birth and death records. The NVSS is a cooperative, decentralized system in which data from over 6 million vital event records are collected each year by all states and U.S. territories and transmitted to the NCHS for processing and analysis. These records are state-owned and are provided through state-owned and operated registration systems. No federal constitutional mandate or law exits requiring states to collect and/or report birth and death information to NCHS.

Consequently, the collection of registration-based vital statistics at the national level depends on a cooperative relationship between states and the federal government. Since 1933, NAPHSIS and its predecessor organizations have collectively represented the states on policy and other agreements with the federal government. It is a professional, non-profit organization whose members include primarily, but not exclusively, the vital statistics registration executives and other employees of state registration offices. In addition to providing the states and territories with a common point of contact with the federal government, NAPHSIS also facilitates inter-state exchange of ideas, methods, and technology for the registration of vital events and dissemination of vital and other public health statistics. Since the inception of the NVSS Program, NAPHSIS has been the only national group whose decisions fully reflect the views of the state vital records offices and, accordingly, the state vital records office, generally adhere to NAPHSIS' policy and program decisions. As further evidence of its unique role with state vital statistics offices, NAPHSIS negotiates with NCHS on behalf of the states about the deliverables, schedule, quality, and other aspects of data provided for the NVSS. NAPHSIS is one of the affiliates of the Association of State and Territorial Health Organization.

Over the past two years, NCHS has jointly worked with NAPHSIS to develop national, model standards and guidelines for how states may best re-engineer their vital records systems to meet state and federal needs. Those standards and guidelines will be available in early 2004, when the task shifts to motivating each state and territory to implement standards-based systems. The implementation of re-

engineered systems in all states is a top priority of NCHS. Accomplishing this goal will: (1) Significantly increase the ability of the NVSS to be responsive to emerging public health needs and user demands; (2) result in more timely and higher quality data that better describe the population by enabling a faster and more efficient transfer of data as well as enhanced data integration among federal, state, and local entities; and (3) permit the various vital registration jurisdictions to implement the recently-approved U.S. Standard Certificates of Birth and Death, and Report of Fetal Death, thus providing the means to collect the most meaningful and uniform health information related to births and deaths. NCHS'' ability to produce a national vital statistics dataset is dependent on all states fully reengineering their data collection systems and implementing the revised certificates and report. Because vital statistics is a decentralized, state-based system, we believe that the best and only effective strategy for convincing all states is by working through their own association, which is NAPHSIS.

NAPHSIS has a history of working collaboratively with NCHS and the other CIOs within CDC on vital statistics related initiatives. Some of these initiatives include:

- The NVSS contract and policy negotiations on deliverables/schedules/quality from state-owned vital statistics systems with CDC/NCHS
- The National Death Index Program with CDC/NCHS
- The ''Improve State and Local Health Information Systems'' cooperative agreement with CDC/EPO
- The Newborn Hearing Screening Project with CDC Center for Birth Defects and Developmental Disabilities
- The National Electronic Disease Surveillance Project with CDC–NEDSS Program

This project has a relationship with two prior or ongoing CDC-funded activities. First, this project focuses on the development of detailed systems (or non-functional) requirements for a model vital statistics system, which is Phase II of the Re-engineering Project. In Phase I, NAPHSIS was an active partner in the development of the functional requirements for the model system. Second, this project is related to the PHIN Project (previously NEDSS) currently underway in CDC. This project will be exploring the use of the PHIN messaging system with re-engineered vital statistics system, and will be developing guidelines on PHIN-compatible re-engineered vital statistics systems.

C. Funding

Approximately $171,500 is available in FY 2004 to fund this award. It is expected that the award will begin on or before June 2004, and will be made for a 12-month budget period within a project period of up to three years. Funding estimates may change.

D. Where To Obtain Additional Information

For general comments or questions about this announcement, contact:

Technical Information Management, CDC Procurement and Grants Office, 2920 Brandywine Road, Atlanta, GA 30341–4146, Telephone: 770–488–2700.

For technical questions about this program, contact: Charles Rothwell, Project Officer, National Center for Health Statistics, Division of Vital Statistics, Room 7311, 3311 Toledo Road, Hyattsville, Maryland 20782, Telephone: 301–458–4468, E-mail: *cjr4@cdc.gov.*

Dated: May 11, 2004.

Wiliam P. Nichols,

Acting Director, Procurement and Grants Office, Centers for Disease Control, and Prevention.

[FR Doc. 04–11078 Filed 5–14–04; 8:45 am]

BILLING CODE 4163–18–P

DEPARTMENT OF HEALTH AND HUMAN SERVICES

National Institutes of Health

National Cancer Institute; Notice of Closed Meeting

Pursuant to section 10(d) of the Federal Advisory Committee Act, as amended (5 U.S.C. Appendix 2), notice is hereby given of the following meeting.

The meeting will be closed to the public in accordance with the provisions set forth in sections 552b(c)(4) and 552b(c)(6), title 5 U.S.C., as amended. The grant applications and the discussions could disclose confidential trade secrets or commercial property such as patentable material, and personal information concerning individuals associated with the grant applications, the disclosure of which would constitute a clearly unwarranted invasion of personal privacy.

Name of Committee: National Cancer Institute Special Emphasis Panel, Mentored Clinical Scientist Development Award Application K08.

Date: May 24, 2004.

Time: 11 a.m. to 12 p.m.

Agenda: To review and evaluate grant applications.

Place: National Institutes of Health, 6116 Executive Boulevard, Rockville, MD 20852. (Telephone conference call.)

Contact Person: Robert Bird, PhD, Scientific Review Administrator, Resources and Training Review Branch, National Cancer Institute, National Institutes of Health, 6116 Executive Blvd., MSC 8328, Room 8113, Bethesda, MD 20892–8328. 301–496–7978, *birdr@mail.nih.gov.*

This notice is being published less than 15 days prior to the meeting due to the timing limitations imposed by the review and funding cycle.

(Catalogue of Federal Domestic Assistance Program Nos. 93.392, Cancer Construction; 93.393, Cancer Cause and Prevention Research; 93.394, Cancer Detection and Diagnosis Research; 93.395, Cancer Treatment Research; 93.396, Cancer Biology Research; 93.397, Cancer Centers Support; 93.398, Cancer Research Manpower; 93.399, Cancer Control, National Institutes of Health, HHS)

Dated: May 10, 2004.

LaVerne Y. Stringfield,

Director, Office of Federal Advisory Committee Policy.

[FR Doc. 04–11065 Filed 5–14–04; 8:45 am]

BILLING CODE 4140–01–M

DEPARTMENT OF HEALTH AND HUMAN SERVICES

National Institutes of Health; Notice of Closed Meeting

Pursuant to section 10(d) of the Federal Advisory Committee Act, as amended (5 U.S.C. Appendix 2), notice is hereby given of the following meeting.

The meeting will be closed to the public in accordance with the provisions set forth in sections 552b(c)(4) and 552b(c)(6), Title 5 U.S.C., as amended. The grant applications and the discussions could disclose confidential trade secrets or commercial property such as patentable material, and personal information concerning individuals associated with the grant applications, the disclosure of which would constitute a clearly unwarranted invasion of personal privacy.

Name of Committee: National Cancer Institute Special Emphasis Panel, Early Detection Research Network Biomarkers Developmental Laboratories.

Date: July 7–8, 1004.

Time: 8 a.m. to 5 p.m.

Agenda: To review and evaluate grant applications.

Place: Bethesda Marriott, 5151 Pooks Hill Road, Bethesda, MD 20814.

Contact Person: Timothy C. Meeker, MD, Scientific Review Administrator, Special Referral and Resources Branch, Division of Extramural Activities, National Cancer Institute, 6116 Executive Boulevard, Room 8088, Rockville, MD 20852, (301) 594–1279.

(Catalogue of Federal Domestic Assistance Program Nos. 93.392, Cancer Construction; 93.393, Cancer Cause and Prevention Research; 93.394, Cancer Detection and Diagnosis Reserach, 93.395, Cancer Treatment Reserach; 93.398, Cancer Biology Research; 93.397, Cancer Centers Support; 93.398, Cancer Research Manpower; 93.399, Cancer Control, National Institutes of Health, HHS)

Dated: May 10, 2004.

LaVerne Y. Stringfield,

Director, Office of Federal Advisory Committee Policy.

[FR Doc. 04–11072 Filed 5–14–04; 8:45 am]

BILLING CODE 4140–01–M

DEPARTMENT OF HEALTH AND HUMAN SERVICES

National Institutes of Health

National Cancer Institute; Notice of Closed Meeting

Pursuant to section 10(d) of the Federal Advisory Committee Act, as amended (5 U.S.C. Appendix 2), notice is hereby given of the following meeting.

The meeting will be closed to the public in accordance with the provisions set forth in sections 552b(c)(4) and 552b(c)(6), title 5 U.S.C., as amended. The contract proposals and the discussions could disclose confidential trade secrets or commercial property such as patentable material, and personal information concerning individuals associated with the contract proposals, the disclosure of which would constitute a clearly unwarranted invasion of personal privacy.

Name of Committee: National Cancer Institute Special Emphasis Panel; SBIR Topic 194.

Date: June 2, 2004.

Time: 11 a.m. to 4 p.m.

Agenda: To review and evaluate contract proposals.

Place: National Institutes of Health, 6130 Executive Blvd., Rockville, MD 20852 (Telephone Conference Call).

Contact Person: Timothy C. Meeker, MD, Scientific Review Administrator, Special Referral and Resources Branch, Division of Extramural Activities, National Cancer Institute, 6116 Executive Boulevard, Room 8088, Rockville MD 20852, (301) 594–1279.

(Catalogue of Federal Domestic Assistance Program Nos. 93.392, Cancer Construction; 93.393, Cancer Cause and Prevention Research; 93.394, Cancer Detection and Diagnosis Research; 93.395, Cancer Treatment Research; 93.396, Cancer Biology Research; 93.397, Cancer Centers Support; 93.398, Cancer Research Manpower; 93.399, Cancer Control, National Institutes of Health, HHS)

Dated: May 10, 2004.

LaVerne Y. Stringfield,

Director, Office of Federal Advisory Committee Policy.

[FR Doc. 04–11073 Filed 5–14–04; 8:45 am]

BILLING CODE 4140–01–M

DEPARTMENT OF HEALTH AND HUMAN SERVICES

National Institutes of Health

National Eye Institute; Notice of Meeting

Pursuant to section 10(d) of the Federal Advisory Committee Act, as amended (5 U.S.C. Appendix 2), notice is hereby given of a meeting of the National Advisory Eye Council.

The meeting will be open to the public as indicated below, with attendance limited to space available. Individuals who plan to attend and need special assistance, such as sign language interpretation or other reasonable accommodations, should notify the Contact Person listed below in advance of the meeting.

The meeting will be closed to the public in accordance with the provisions set forth in sections 552b(c)(4) and 552b(c)(6), title 5 U.S.C., as amended. The grant applications and the discussions could disclose confidential trade secrets or commercial property such as patentable material, and personal information concerning individuals associated with the grant applications, the disclosure of which would constitute a clearly unwarranted invasion of personal privacy.

Name of Committee: National Advisory Eye Council.

Date: June 10–11, 2004.

Open: June 10, 2004, 8:30 a.m. to 12 p.m.

Agenda: Following opening remarks by the Director, NEI, there will be presentations by staff of the Institute and discussions concerning Institute programs and policies.

Place: Hyatt Regency Bethesda, One Bethesda Metro Center, 7400 Wisconsin Avenue, Bethesda, MD 20814.

Closed: June 10, 2004, 1 p.m. to 5 p.m.

Agenda: To review and evaluate grant applications.

Place: Hyatt Regency Bethesda, One Bethesda Metro Center, 7400 Wisconsin Avenue, Bethesda, MD 20814.

Open: June 11, 2004, 8:30 a.m. to Adjournment.

Agenda: Discussion of Peer Review Issues.

Place: Hyatt Regency Bethesda, One Bethesda Metro Center, 7400 Wisconsin Avenue, Bethesda, MD 20814.

Contact Person: Lore Anne McNicol, Director, Division of Extramural Research, National Eye Institute, National Institutes of Health, Bethesda, MD 20892, (301) 451–2020.

Any member of the public interested in presenting oral comments to the committee may notify the Contact Person listed on this notice at least 10 days in advance of the meeting. Interested individuals and representatives of organizations may submit a letter of intent, a brief description of the organization represented, and a short description of the oral presentation. Only one representative of an organization may be allowed to present oral comments and if accepted by the committee, presentations may be limited to five minutes. Both printed and electronic copies are requested for the record. In addition, any interested person may file written comments with the committee by forwarding their statements to the Contact Person listed on this notice. The statement should include the name, address, telephone number and when applicable, the business or professional affiliation of the interested person.

Information is also available on the Institute's/Center's home page: *www.nei.nih.gov,* where an agenda and any additional information for the meeting will be posted when available.

(Catalogue of Federal Domestic Assistance Program Nos. 93.867, Vision Research, National Institutes of Health, HHS)

Dated: May 6, 2004.

LaVerne Y. Stringfield,

Director, Office of Federal Advisory Committee Policy.

[FR Doc. 04–11095 Filed 5–14–04; 8:45 am]

BILLING CODE 4140–01–M

DEPARTMENT OF HEALTH AND HUMAN SERVICES

National Institutes of Health

National Heart, Lung, and Blood Institute; Notice of Closed Meeting

Pursuant to section 10(d) of the Federal Advisory Committee Act, as amended (5 U.S.C. Appendix 2), notice is hereby given of the following meeting.

The meeting will be closed to the public in accordance with the provisions set forth in sections 552b(c)(4) and 552b(c)(6), title 5 U.S.C., as amended. The contract proposals and the discussions could disclose confidential trade secrets or commercial property such as patentable material, and personal information concerning individuals associated with the contract proposals, the disclosure of which would constitute a clearly unwarranted invasion of personal privacy.

Name of Committee: National Heart, Lung and Blood Institute Special Emphasis Panel, Re-Engineering the Clinical Research Enterprise.

Date: May 26–28, 2004.

Time: 7 p.m. to 5 p.m.

Agenda: To review and evaluate contract proposals.

Place: Double Tree Rockville, 1750 Rockville Pike, Rockville, MD 20852.

Contact Person: Patricia A. Haggerty, PhD, Scientific Review Administrator, Review Branch, Division of Extramural Affairs, National Heart, Lung, and Blood Institute, National Institutes of Health, 6701 Rockledge Drive, Room 7188, MSC 7924, Bethesda, MD 20892, 301/435–0280.

This notice is being published less than 15 days prior to the meeting due to the timing limitations imposed by the review and funding cycle.

(Catalogue of Federal Domestic Assistance Program Nos. 93.233, National Center for Sleep Disorders Research; 93.837, Heart and Vascular Diseases Research; 93.838, Lung Diseases Research; 93.839, Blood Diseases and Resources Research, National Institutes of Health, HHS)

Dated: May 6, 2004.

LaVerne Y. Stringfield,

Director, Office of Federal Advisory Committee Policy.

[FR Doc. 04–11093 Filed 5–14–04; 8:45 am]

BILLING CODE 4140–01–M

DEPARTMENT OF HEALTH AND HUMAN SERVICES

National Institutes of Health

National Heart, Lung, and Blood Institute; Notice of Closed Meetings

Pursuant to section 10(d) of the Federal Advisory Committee Act, as amended (5 U.S.C. Appendix 2), notice is hereby given of the following meetings.

The meetings will be closed to the public in accordance with the provisions set forth in sections 552b(c)(4) and 552b(c)(6), Title 5 U.S.C., as amended. The grant applications and the discussions could disclose confidential trade secrets or commercial property such as patentable material, and personal information concerning individuals associated with the grant applications, the disclosure of which would constitute a clearly unwarranted invasion of personal privacy.

Name of Committee: National Heart, Lung, and Blood Institute Special Emphasis Panel; Review of RO1 Applications.

Date: June 16, 2004.

Time: 9:30 a.m. to 12 p.m.

Agenda: To review and evaluate grant applications.

Place: National Institutes of Health, 6701 Rockledge Drive, Bethesda, MD 20892 (Telephone Conference Call).

Contact Person: William J. Johnson, PhD, Review Branch, Division of Extramural Affairs, National Heart, Lung, and Blood Institute, National Institutes of Health, 6701 Rockledge Drive, Room 7184, MSC 7924, Bethesda, MD 20892, 301–435–0275.

Name of Committee: National Heart, Lung, and Blood Institute Special Emphasis Panel Review of RFA–HL–04–008: Molecular Mechanisms Underlying Diamond-Blackfan Anemia and Other Congenital Bone Marrow Failure Syndromes.

Date: June 21–22, 2004.

Time: 7 p.m. to 5 p.m.

Agenda: To review and evaluate grant applications.

Place: St. Gregory Hotel, 2033 M Street, NW., Washington, DC 20036.

Contact Person: Irina Gordienko, PhD, Division of Extramural Activities, National Heart, Lung, and Blood Institute, National Institutes of Health, 6701 Rockledge Drive, Room 7180, MSC 7924, Bethesda, MD 20892, 301–435–0725.

(Catalogue of Federal Domestic Assistance Program Nos. 93.233, National Center for Sleep Disorders Research; 93.837, Heart and Vascular Diseases Research; 93.838, Lung Diseases Research; 93.839, Blood Diseases and Resources Research, National Institutes of Health, HHS)

Dated: May 11, 2004.

LaVerne Y. Stringfield,

Director, Office of Federal Advisory Committee Policy.

[FR Doc. 04–11130 Filed 5–14–04; 8:45 am]

BILLING CODE 4140–01–M

DEPARTMENT OF HEALTH AND HUMAN SERVICES

National Institutes of Health

National Heart, Lung, and Blood Institute; Notice of Closed Meeting

Pursuant to section 10(d) of the Federal Advisory Committee Act, as amended (5 U.S.C. Appendix 2), notice is hereby given of the following meeting.

The meeting will be closed to the public in accordance with the provisions set forth in sections 552b(c)(4) and 552b(c)(6), Title 5 U.S.C., as amended. The grant applications and the discussions could disclose confidential trade secrets or commercial property such as patentable material, and personal information concerning individuals associated with the grant applications, the disclosure of which would constitute a clearly unwarranted invasion of personal privacy.

Name of Committee: Heart, Lung, and Blood Initial Review Group; Heart, Lung, and Blood Program Project Review Committee.

Date: June 17, 2004.

Time: 8 a.m. to 4 p.m.

Agenda: To review and evaluate grant applications.

Place: Holiday Inn Chevy Chase, 5520 Wisconsin Avenue, Chevy Chase, MD 20815.

Contact Person: Jeffrey H. Hurst, PhD, Review Branch, Division of Extramural Affairs, National Heart, Lung, and Blood Institute, National Institutes of Health, Bethesda, MD 20892, (301) 435–0303.

(Catalogue of Federal Domestic Assistance Program Nos. 93.233, National Cancer for Sleep Disorders Research; 93.837, Heart and Vascular Diseases Research; 93.838, Lung Diseases Research; 93,839, Blood Diseases and Resources Research, National Institutes of Health, HHS)

Dated: May 11, 2004.

LaVerne Y. Stringfield.

Director, Office of Federal Advisory Committee Policy.

[FR Doc. 04–11131 Filed 5–14–04; 8:45 am]

BILLING CODE 4140–01–M

DEPARTMENT OF HEALTH AND HUMAN SERVICES

National Institutes of Health

National Heart, Lung, and Blood Institute; Notice of Closed Meeting

Pursuant to section 10(d) of the Federal Advisory Committee Act, as amended (5 U.S.C. Appendix 2), notice is hereby given of the following meetings.

The meetings will be closed to the public in accordance with the provisions set forth in sections 552b(c)(4) and 552b(c)(6), Title 5 U.S.C., as amended. The grant applications and the discussions could disclose confidential trade secrets or commercial property such as patentable material, and personal information concerning individuals associated with the grant applications, the disclosure of which would constitute a clearly unwarranted invasion of personal privacy.

Name of Committee: National Heart, Lung, and Blood Institute Special Emphasis Panel; Review of RFA–HL–04–006: Overweight & Obesity Control at Worksites.

Date: June 18, 2004.

Time: 8 a.m. to 4:30 p.m.

Agenda: To review and evaluate grant applications.

Place: Hilton Silver Spring, 8727 Colesville Road, Silver Spring, MD 20910.

Contact Person: Judy S. Hannah, PhD, Scientific Review Administrator, Review Branch, Division of Extramural Affairs, National Heart, Lung, and Blood Institute, National Institutes of Health, 6701 Rockledge Drive, Room 7190, Bethesda, MD 20892, 301/435–0287.

Name of Committee: National Heart, Lung, and Blood Institute Special Emphasis Panel; Review of Conference Applications (R13s).

Date: June 18, 2004.

Time: 4:30 p.m. to 5 p.m.

Agenda: To review and evaluate grant applications.

Place: Hilton Silver Spring, 8727 Colesville Road, Silver Spring, MD 20910.

Contact Person: Judy S. Hannah, PhD, Scientific Review Administrator, Review Branch, Division of Extramural Affairs, National Heart, Lung, and Blood Institute, National Institutes of Health, 6701 Rockledge Drive, Room 7190, Bethesda, MD 20892, 301/435–0287.

(Catalogue of Federal Domestic Assistance Program Nos. 93.233, National Center for Sleep Disorders Research; 93.837, Heart and Vascular Research; 93.838, Lung Diseases Research; 93.839, Blood Diseases and Resources Research, National Institutes of Health, HHS)

Dated: May 11, 2004.

LaVerne Y. Stringfield,

Director, Office of Federal Advisory Committee Policy.

[FR Doc. 04–11132 Filed 5–14–04; 8:45 am]

BILLING CODE 4140–01–M

DEPARTMENT OF HEALTH AND HUMAN SERVICES

National Institutes of Health

National Institute of Allergy and Infectious Diseases; Notice of Closed Meeting

Pursuant to section 10(d) of the Federal Advisory Committee Act, as amended (5 U.S.C. Appendix 2), notice is hereby given of the following meeting.

The meeting will be closed to the public in accordance with the provisions set forth in sections 552b(c)(4) and 552b(c)(6), title 5 U.S.C., as amended. The contract proposals and the discussions could disclose confidential trade secrets or commerical property such as patentable material, and personal information concerning individuals associated with the contract proposals, the disclosure of which would constitute a clearly unwarranted invasion of personal privacy.

Name of Committee: National Institute of Allergy and Infectious Diseases Special Emphasis Panel, ''In Vitro and Animal Models for Emerging Infectious Diseases and BioDefense.'' (Parts C, D & E).

Date: June 8–10, 2004.

Time: 8:30 a.m. to 5:30 p.m.

Agenda: To review and evaluate contract proposals.

Place: Marriott Crystal City, 1999, Jefferson Davis Highway, Arlington, VA 22202.

Contact Person: Cheryl K. Lapham, PhD, Scientific Review Administrator, Scientific Review Program, National Institute of Allergy and Infectious Diseases, DEA/NIH/DHHS, 6700–B Rockledge Drive MSC 7616, Room 3127, Bethesda, MD 20892–7616. 301–402–4598; *clapham@niaid.nih.gov.*

(Catalogue of Federal Domestic Assistance Program Nos. 93.855, Allergy, Immunology, and Transplantation Research; 93.856, Microbiology and Infectious Diseases Research, National Institutes of Health, HHS).

Dated: May 10, 2004.

LaVerne Y. Stringfield,

Director, Office of Federal Advisory Committee Policy.

[FR Doc. 04–11064 Filed 5–14–04; 8:45 am]

BILLING CODE 4140–01–M

DEPARTMENT OF HEALTH OF HUMAN SERVICES

National Institutes of Health

National Institute of Allergy and Infectious Diseases; Notice of Closed Meeting

Pursuant to section 10(d) of the Federal Advisory Committee Act, as amended (5 U.S.C. Appendix 2), notice is hereby given of the following meeting.

The meeting will be closed to the public in accordance with the provisions set forth in sections 552b(c)(4) and 552b(c)(6), title 5 U.S.C., as amended. The contract proposals and the discussions could disclose confidential trade secrets or commercial property such as patentable material, and personal information concerning individuals associated with the contract proposals, the disclosure of which would constitute a clearly unwarranted invasion of personal privacy.

Name of Committee: National Institute of Allergy and Infectious Diseases Special Emphasis Panel; HIV Vaccine Design and Development Teams for Prevention and Treatment.

Date: June 23–24, 2004.

Time: 8:30 a.m. to 5 p.m.

Agenda: To review and evaluate contract proposals.

Place: Holiday Inn Chevy Chase, 5520 Wisconsin Avenue, Chevy Chase, MD 20815.

Contact Person: Hagit David, PhD, Scientific Review Administrator, Scientific Review Program, Division of Extramural Activities, NIAID, NIH, Room 2117, 6700–B Rockledge Drive, MSC 7610, Bethesda, MD 20892–7610, (301) 496–2550, *hdavid@mercury.niaid.nih.gov.*

(Catalogue of Federal Domestic Assistance Program Nos. 93.855, Allergy, Immunology, and Transplantation Research; 93.856, Microbiology and Infectious Diseases Research, National Institutes of Health, HHS)

Dated: May 10, 2004.

LaVerne Y. Stringfield,

Director, Office of Federal Advisory Committee Policy.

[FR Doc. 04–11066 Filed 5–14–04; 8:45 am]

BILLING CODE 4140–01–M

DEPARTMENT OF HEALTH AND HUMAN SERVICES

National Institutes of Health

National Institute of Mental Health; Notice of Closed Meeting

Pursuant to section 10(d) of the Federal Advisory Committee Act, as amended (5 U.S.C. Appendix 2), notice is hereby given of the following meeting.

The meeting will be closed to the public in accordance with the provisions set forth in sections 552b(c)(4) and 552b(c), title 5 U.S.C., as amended. The grant applications and the discussions could disclose confidential trade secrets or commercial property such as patentable material, and personal information concerning individuals associated with the grant applications, the disclosure of which would constitute a clearly unwarranted invasion of personal privacy.

Name of Committee: National Institute of Mental Health Initial Review Group; Interventions Research Review Committee.

Date: June 15–16, 2004.

Time: 9 a.m. to 5:30 p.m.

Agenda: To review and evaluate grant applications.

Place: St. Gregory Hotel, 2033 M. Street, NW., Washington, DC 20036.

Contact Person: David I. Sommers, PhD, Scientific Review Administrator, Division of Extramural Activities, National Institute of Mental Health, NIH, 6001 Executive Blvd., Room 6144, MSC 9606, Bethesda, MD 20892–9606, (301) 443–6470, *dsommers@mail.nih.gov.*

(Catalogue of Federal Domestic Assistance Program Nos. 93.242, Mental Health Research Grants; 93.281, Scientist Development Award, Scientist Development Award for Clinicians, and Research Scientist Award; 93.282, Mental Health National Research Service Awards for Research Training, National Institutes of Health, HHS)

Dated: May 10, 2004.

LaVerne Y. Stringfield,

Director, Office of Federal Advisory Committee Policy.

[FR Doc. 04–11067 Filed 5–14–04; 8:45 am]

BILLING CODE 4140–01–M

DEPARTMENT OF HEALTH AND HUMAN SERVICES

National Institutes of Health

National Institute on Deafness and Other Communication Disorders; Notice of Closed Meeting

Pursuant to section 10(d) of the Federal Advisory Committee Act, as amended (5 U.S.C. Appendix 2), notice is hereby given of the following meeting.

The meeting will be closed to the public in accordance with the provisions set forth in sections 552b(c)(4) and 552b(c)(6), title 5 U.S.C., as amended. The grant applications and the discussions could disclose confidential trade secrets or commercial property such as patentable material, and personal information concerning individuals associated with the grant applications, the disclosure of which

would constitute a clearly unwarranted invasion of personal privacy.

Name of Committee: Communication Disorders Review Committee.
Date: June 16–17, 2004.
Time: 8 a.m. to 5 p.m.
Agenda: To review and evaluate grant applications.
Place: Residence Inn Bethesda, 7335 Wisconsin Avenue, Bethesda, MD 20814.
Contact Person: Melissa J. Stock, PhD, MPH, Scientific Review Administrator, Scientific Review Branch, Division of Extramural Research, NIDCD/NIH, 6120 Executive Blvd., Bethesda, MD 20892, (301) 496–8683.

(Catalogue of Federal Domestic Assistance Program Nos. 93.173, Biological Research Related to Deafness and Communicative Disorders, National Institutes of Health, HHS)

Dated: May 10, 2004.

LaVerne Y. Stringfield,

Director, Office of Federal Advisory Committee Policy.

[FR Doc. 04–11068 Filed 5–14–04; 8:45 am]

BILLING CODE 4140–01–M

DEPARTMENT OF HEALTH AND HUMAN SERVICES

National Institutes of Health

National Institute of Diabetes and Digestive and Kidney Diseases; Notice of Closed Meetings

Pursuant to section 10(d) of the Federal Advisory Committee Act, as amended (5 U.S.C. Appendix 2), notice is hereby given of the following meetings.

The meetings will be closed to the public in accordance with the provisions set forth in sections 552b(c)(4) and 552b(c)(6), title 5 U.S.C., as amended. The grant applications and the discussions could disclose confidential trade secrets or commercial property such as patentable material, and personal information concerning individuals associated with the grant applications, the disclosure of which would constitute a clearly unwarranted invasion of personal privacy.

Name of Committee: National Institute of Diabetes and Digestive and Kidney Diseases Special Emphasis Panel; K01 and K08 Awards Application Reviews.
Date: June 10, 2004.
Time: 2 p.m. to 3 p.m.
Agenda: To review and evaluate grant applications.
Place: National Institutes of Health, Two Democracy Plaza, 6707 Democracy Boulevard, Bethesda, MD 20892 (Telephone Conference Call).
Contact Person: D.G. Patel, PhD, Scientific Review Administrator, Review Branch, DEA, NIDDK, National Institutes of Health, Room 755, 6707 Democracy Boulevard, Bethesda, MD 20892, (301) 594–7682, *pateldg@niddk.nih.gov.*

Name of Committee: National Institute of Diabetes and Digestive and Kidney Diseases Special Emphasis Panel; K01 and K08 Awards Application Reviews.
Date: June 10, 2004.
Time: 3 p.m. to 4 p.m.
Agenda: To review and evaluate grant applications.
Place: National Institutes of Health, Two Democracy Plaza, 6707 Democracy Boulevard, Bethesda, MD 20892 (Telephone Conference Call).
Contact Person: D.G. Patel, PhD, Scientific Review Administrator, Review Branch, DEA, NIDDK, National Institutes of Health, Room 755, 6707 Democracy Boulevard, Bethesda, MD 20892, (301) 594–7682, *pateldg@niddk.nih.gov.*

Name of Committee: National Institute of Diabetes and Digestive and Kidney Diseases Special Emphasis Panel; Clinical Islet Transplantation: Clinical Centers.
Date: July 8, 2004.
Time: 8 a.m. to 12 p.m.
Agenda: To review and evaluate grant applications.
Place: Bethesda Marriott Suites, 6711 Democracy Boulevard, Bethesda, MD 20817.
Contact Person: D.G. Patel, PhD, Scientific Review Administrator, Review Branch, DEA, NIDDK, National Institutes of Health, Room 755, 6707 Democracy Boulevard, Bethesda, MD 20892, (301) 594–7682, *pateldg@niddk.nih.gov.*

Name of Committee: National Institute of Diabetes and Digestive and Kidney Diseases Special Emphasis Panel; Clinical Islet Transplantation: Data Coordinating Centers.
Date: July 8, 2004.
Time: 1 p.m. to 5 p.m.
Agenda: To review and evaluate grant applications.
Place: Bethesda Marriott Suites, 6711 Democracy Boulevard, Bethesda, MD 20817.
Contact Person: D.G. Patel, PhD, Scientific Review Administrator, Review Branch, DEA, NIDDK, National Institutes of Health, Room 755, 6707 Democracy Boulevard, Bethesda, MD 20892, (301) 594–7682, *pateldg@niddk.nih.gov.*

(Catalogue of Federal Domestic Assistance Program Nos. 93.847, Diabetes, Endocrinology and Metabolic Research; 93.848, Digestive Diseases and Nutrition Research; 93.849, Kidney Diseases, Urology and Hematology Research, National Institutes of Health, HHS)

Dated: May 10, 2004.

LaVerne Y. Stringfield,

Director, Office of Federal Advisory Committee Policy.

[FR Doc. 04–11069 Filed 5–14–04; 8:45 am]

BILLING CODE 4140–01–M

DEPARTMENT OF HEALTH AND HUMAN SERVICES

National Institutes of Health

National Institute on Aging; Notice of Meeting

Pursuant to section 10(d) of the Federal Advisory Committee Act, as amended (5 U.S.C. Appendix 2), notice is hereby given of a meeting of the Board of Scientific Counselors, NIA.

The meeting will be open to the public as indicated below, with attendance limited to space available. Individuals who plan to attend and need special assistance, such as sign language interpretation or other reasonable accommodations, should notify the Contact Person listed below in advance of the meeting.

The meeting will be closed to the public as indicated below in accordance with the provisions set forth in section 552b(c)(6), title 5 U.S.C., as amended for the review, discussion, and evaluation of individual intramural programs and projects conducted by the National Institute on Aging, including consideration of personnel qualifications and performance, and the competence of individual investigators, the disclosure of which would constitute a clearly unwarranted invasion of personal privacy.

Name of Committee: Board of Scientific Counselors, NIA.
Date: June 9, 2004.
Closed: 8 a.m. to 9 a.m.
Agenda: To review and evaluate personal qualifications and performance, and competence of individual investigators.
Place: Gerontology Research Center, National Institutes of Health, 5600 Nathan Shock Drive, Baltimore, MD 21224–6825.
Open: 9 a.m. to 11:30 a.m.
Agenda: Committee Discussion.
Place: Gerontology Research Center, National Institutes of Health, 5600 Nathan Shock Drive, Baltimore, MD 21224–6825.
Closed: 11:30 a.m. to 12:30 p.m.
Agenda: To review and evaluate personal qualifications and performance, and competence of individual investigators.
Place: Gerontology Research Center, National Institutes of Health, 5600 Nathan Shock Drive, Baltimore, MD 21224–6825.
Open: 12:30 p.m. to 4 p.m.
Agenda: Committee Discussion.
Place: Gerontology Research Center, National Institutes of Health, 5600 Nathan Shock Drive, Baltimore, MD 21224–6825.
Closed: 4:30 p.m. to 5:30 p.m.
Agenda: To review and evaluate personal qualifications and performance, and competence of individual investigators.
Place: Gerontology Research Center, National Institutes of Health, 5600 Nathan Shock Drive, Baltimore, MD 21224–6825.
Contact Person: Dan L. Longo, MD, Scientific Director, National Institute of Aging, Gerontology Research Center,

National Institutes of Health, 5600 Nathan Shock Drive, Baltimore, MD 21224–6825, (410) 558–8110, *dl14q@nia.nih.gov.*

(Catalogue of Federal Domestic Assistance Program Nos. 93.866, Aging Research, National Institutes of Health, HHS)

Dated: May 10, 2004.

LaVerne Y. Stringfield,

Director, Office of Federal Advisory Committee Policy.

[FR Doc. 04–11070 Filed 5–14–04; 8:45 am]

BILLING CODE 4140–01–M

DEPARTMENT OF HEALTH AND HUMAN SERVICES

National Institutes of Health

National Institutes on Aging; Notice of Closed Meetings

Pursuant to section 10(d) of the Federal Advisory Committee Act, as amended (5 U.S.C. Appendix 2), notice is hereby given of the following meetings.

The meetings will be closed to the public in accordance with the provisions set forth in sections 552b(c)(4) and 552b(c)(6), title 5 U.S.C., as amended. The grant applications and the discussions could disclose confidential trade secrets or commercial property such as patentable material, and personal information concerning individuals associated with the grant applications, the disclosure of which would constitute a clearly unwarranted invasion of personal privacy.

Name of Committee: National Institute on Aging Special Emphasis Panel, Prevention, Treatment and Modeling of AD.

Date: May 20–21, 2004.

Time: 7 p.m. to 5 p.m.

Agenda: To review and evaluate grant applications.

Place: Holiday Inn Chevy Chase, 5520 Wisconsin Avenue, Chevy Chase, MD 20815.

Contact Person: Louise L. Hsu, PhD, The Bethesda Gateway Building, 7201 Wisconsin Avenue/Suite 2C212, Bethesda, MD 20892. (301) 496–7705.

This notice is being published less than 15 days prior to the meeting due to the timing limitations imposed by the review and funding cycle.

Name of Committee: National Institute on Aging Special Emphasis Panel, ''Immune System and Aging.''

Date: May 26–27, 2004.

Time: 6:30 p.m. to 8 a.m.

Agenda: To review and evaluate grant applications.

Place: Holiday Inn Chevy Chase, 5520 Wisconsin Avenue, Chevy Chase, MD 20815.

Contact Person: Alicja L. Markowska, PhD, DSC, Health Scientist Administrator, Scientific Review Office, National Institute on Aging, National Institutes of Health, Room 2C212, 7201 Wisconsin Avenue, Bethesda, MD 20814. 301–402–7703; *markowsa@nia.nih.gov.*

This notice is being published less than 15 days prior to the meeting due to the timing limitations imposed by the review and funding cycle.

Name of Committee: National Institute on Aging Special Emphasis Panel, Perinatal Nutrition.

Date: June 10, 2004.

Time: 1 p.m. to 4 p.m.

Agenda: To review and evaluate grant applications.

Place: National Institute on Aging, Gateway Building, 7201 Wisconsin Avenue, 2C212, Bethesda, MD 20814. (Telephone conference call.)

Contact Person: William Cruce, PhD, Health Scientist Administrator, Scientific Review Office, National Institute on Aging, National Institutes of Health, Room 2C212, 7201 Wisconsin Avenue, Bethesda, MD 20814. 301–402–7704, *crucew@nia.nih.gov.*

Name of Committee: National Institute on Aging Initial Review Group, Behavior and Social Science of Aging Review Committee.

Date: June 10–11, 2004.

Time: 4 p.m. to 5 p.m.

Agenda: To review and evaluate grant applications.

Place: Hyatt Regency Bethesda, One Bethesda Metro Center, 7400 Wisconsin Avenue, Bethesda, Md 20814,

Contact Person: Alfonso R. Latoni, PhD, Scientific Review Administrator, Scientific Review Office, National Institute on Aging, Gateway Building 2C212, 7201 Wisconsin Avenue, Bethesda, MD 20892. 301–496–9666; *latonia@mail.nih.gov.*

Name of Committee: National Institute on Aging Special Emphasis Panel, The Role of Tau in Neurodegeneration II.

Date: June 10–11, 2004.

Time: 6 p.m. to 5 p.m.

Agenda: To review and evaluate grant applications.

Place: Hyatt Regency Bethesda, One Bethesda Metro Center, 7400 Wisconsin Avenue, Bethesda, MD 20814.

Contact Person: Bita Nakhai, PhD. Scientific Bita Nakhai, PhD, Scientific Review Administrator, National Institute on Aging, Gateway Building, 7201 Wisconsin Avenue, 2C212, Bethesda, MD 20814. 301–402–7701, *nakhaib@nia.nih.gov.*

Name of Committee: National Institute on Aging Special Emphasis Panel, Organelle Lifespan Mechanism.

Date: June 14–15, 2004.

Time: 6 p.m. to 5 p.m.

Agenda: To review and evaluate grant applications.

Place: Holiday Inn Chevy Chae, 5520 Wisconsin Avenue, Chevy Chase, MD 20815.

Contact Person: Bita Nakhai, PhD, Scientific Review Administrator, National Institute on Aging, Gateway Building, 7201 Wisconsin Avenue, 2C212, Bethesda, MD 20814. 301–402–7701, *nakhaib@nia.nih.gov.*

Name of Committee: National Institute on Aging Special Emphasis Panel, Stem Cells in Aging.

Date: June 16–17, 2004.

Time: 6 p.m. to 5 p.m.

Agenda: To review and evaluate grant applications.

Place: Holiday Inn Chevy Chase, 5520 Wisconsin Avenue, Chevy Chase, Md 20815.

Contact Person: Ramesh Vemuri, PhD, National Institute on Aging, Gateway Building, 7201 Wisconsin Avenue, 2C212, Bethesda, MD, 20892. 301–402–7700, *nakhaib@nia.nih.gov.*

(Catalogue of Federal Domestic Assistance Program Nos. 93–86, Aging Research, National Institutes of Health, HHS)

Dated: May 10, 2004.

LaVerne Y. Stringfield,

Director, Office of Federal Advisory Committee Policy.

[FR Doc. 04–11071 Filed 5–14–04; 8:45 am]

BILLING CODE 4140–01–M

DEPARTMENT OF HEALTH AND HUMAN SERVICES

National Institutes of Health

National Institute of Child Health and Human Development; Notice of Closed Meeting

Pursuant to section 10(d) of the Federal Advisory Committee Act, as amended (5 U.S.C. Appendix 2), notice is hereby given of the following meeting.

The meeting will be closed to the public in accordance with the provisions set forth in sections 552b(c)(4) and 552b(c)(6), title 5 U.S.C., as amended. The grant applications and the discussions could disclose confidential trade secrets or commercial property such as patentable material, and personal information concerning individuals associated with the grant applications, the disclosure of which would constitute a clearly unwarranted invasion of personal privacy.

Name of Committee: National Institute of Child Health and Human Development Special Emphasis Panel; ''Comparative Genetics of Structural Birth Defects''.

Date: June 2–3, 2004.

Time: 8 a.m. to 5 p.m.

Agenda: To review and evaluate grant applications.

Place: Holiday Inn Select Bethesda, 8120 Wisconsin Ave., Bethesda, MD 20814.

Contact Person: Anne Krey, Scientific Review Administrator, Division of Scientific Review, National Institute of Child Health and Human Development, National Institutes of Health, Bethesda, MD 20892, 301–435–6908.

(Catalogue of Federal Domestic Assistance Program Nos. 93.864, Population Research; 93.865, Research for Mothers and Children; 93.929, Center for Medical Rehabilitation Research; 93.209, Contraception and Infertility Loan Repayment Program, National Institutes of Health, HHS)

Dated: May 6, 2004.

LaVerne Y. Stringfield,

Director, Office of Federal Advisory Committee Policy.

[FR Doc. 04–11089 Filed 5–14–04; 8:45 am]

BILLING CODE 4140–01–M

DEPARTMENT OF HEALTH AND HUMAN SERVICES

National Institutes of Health

National Institute of Mental Health; Notice of Closed Meetings

Pursuant to section 10(d) of the Federal Advisory Committee Act, as amended (5 U.S.C. Appendix 2), notice is hereby given of the following meetings.

The meetings will be closed to the public in accordance with the provisions set forth in sections 552b(c)(4) and 552b(c)(6), title 5 U.S.C., as amended. The grant applications and the discussions could disclose confidential trade secrets or commercial property such as patentable material, and personal information concerning individuals associated with the grant applications, the disclosure of which would constitute a clearly unwarranted invasion of personal privacy.

Name of Committee: National Institute of Mental Health Initial Review Group, Services Research Review Committee.

Date: June 16–17, 2004.

Time: 8 a.m. to 4 p.m.

Agenda: To review and evaluate grant applications.

Place: Melrose Hotel, 2430 Pennsylvania Ave., NW., Washington, DC 20037.

Contact Person: Henry J. Haigler, PhD, Scientific Review Administrator, Division of Extramural Activities, National Institute of Mental Health, NIH, Neuroscience Center, 6001 Executive Blvd., Rm. 6150, MSC 9608, Bethesda, MD 20882–9608, (301) 443–7216, *hhaigler@mail.nih.gov.*

Name of Committee: National Institute of Mental Health Special Emphasis Panel, Chlid and Family Mental Health Services Reserach.

Date: June 17–18, 2004.

Time: 9 a.m. to 5 p.m.

Agenda: To review and evaluate grant applications.

Place: Melrose Hotel, 2430 Pennsylvania Ave., NW., Washington, DC 20037.

Contact Person: Marina Broitman, PhD., Scientific Review Administrator, Division of Extramural Activities, National Institute of Mental Health, NIH, Neuroscience Center, 6001 Executive Blvd, Room 6153, MSC 9608, Bethesda, MD 20892–9608, (301) 402–8152 *mbroitma@mail.nih.gov.*

(Catalogue of Federal Domestic Assistance Program Nos. 93.242, Mental Health Research Grants; 93.281, Scientist Development Award, Scientist Development Award for Clinicians, and Research Scientist Award; 93.282, Mental Health National Research Service Awards for Research Training, National Institutes of Health, HHS)

Dated: May 6, 2004.

LaVerne Y. Stringfield,

Director, Office of Federal Advisory Committee Policy.

[FR Doc. 04–11090 Filed 5–14–04; 8:45 am]

BILLING CODE 4140–01–M

DEPARTMENT OF HEALTH AND HUMAN SERVICES

National Institutes of Health

National Institutes of Allergy and Infectious Diseases; Notice of Closed Meeting

Pursuant to section 10(d) of the Federal Advisory Committee Act, as amended (5 U.S.C. Appendix 2), notice is hereby given of the following meeting.

The meeting will be closed to the public in accordance with the provisions set forth in sections 552b(c)(4) and 552b(c)(6), title 5 U.S.C., as amended. The grant applications and the discussions could disclose confidential trade secrets or commercial property such as patentable material, and personal information concerning individuals associated with the grant applications, the disclosure of which would constitute a clearly unwarranted invasion of personal privacy.

Name of Committee: Allergy, Immunology, and Transplantation Research Committee; Allergy, Immunology & Transplantation Research Review Committee.

Date: June 14–15, 2004.

Time: 8 a.m. to 5 p.m.

Agenda: To review and evaluate grant applications.

Place: Gaithersburg Marriott Washingtonian Center, 9751 Washingtonian Boulevard, Gaithersburg, MD 20878.

Contact Person: Quirijn Vos, PhD, Scientific Review Administrator, Scientific Review Program, Division of Extramural Activities, National Institutes of Health/NIAID/DHHS, 6700B Rockledge Drive, MSC 7616, Bethesda, MD 20892–7616, 301–496–2550, *qvos@niaid.nih.gov.*

(Catalogue of Federal Domestic Assistance Program Nos. 93.855, Allergy, Immunology, and Transplantation Research; 93.856, Microbiology and Infectious Diseases Research, National Institutes of Health, HHS)

Dated: May 6, 2004.

LaVerne Y. Stringfield,

Director, Office of Federal Advisory Committee Policy.

[FR Doc. 04–11091 Filed 5–14–04; 8:45 am]

BILLING CODE 4140–01–M

DEPARTMENT OF HEALTH AND HUMAN SERVICES

National Institutes of Health

National Institute of Child Health and Human Development; Notice of Meeting

Pursuant to section 10(d) of the Federal Advisory Committee Act, as amended (5 U.S.C. Appendix 2), notice is hereby given of a meeting of the National Advisory Child Health and Human Development Council.

The meeting will be open to the public as indicated below, with attendance limited to space available. Individuals who plan to attend and need special assistance, such as sign language interpretation or other reasonable accommodations, should notify the Contact Person listed below in advance of the meeting.

The meeting will be closed to the public in accordance with the provisions set forth in sections 552b(c)(4) and 552b(c)(6), Title 5 U.S.C., as amended. The grant applications and/or contract proposals and the discussions could disclose confidential trade secrets or commercial property such as patentable material, and personal information concerning individuals associated with the grant applications and/or contract proposals, the disclosure of which would constitute a clearly unwarranted invasion of personal privacy.

Name of Committee: National Advisory Child Health and Human Development Council.

Date: June 10–11, 2004.

Open: June 10, 2004, 8:30 a.m. to Adjournment.

Agenda: (1) a report by the Director, NICHD; (2) a presentation by the Pregnancy and Perinatology Branch; and other Council Business.

Place: National Institutes of Health, Building 31, 31 Center Drive, Conference Room 6, Bethesda, MD 20892.

Closed: June 11, 2004, 8:30 a.m. to Adjournment.

Agenda: To review and evaluate grant applications.

Place: National Institutes of Health, Building 31, 31 Center Drive, Conference Room 6, Bethesda, MD 20892.

Contact Person: Mary Plummer, Committee Management Officer, Division of Scientific Review, National Institute of Child Health and Human Development, NIH, 6100 Executive Blvd., Room 5E01, Bethesda, MD 20892, (301) 594–7232.

Any interested person may file written comments with the committee by forwarding the statement to the Contact Person listed on this notice. The statement should include the name, address, telephone number and when applicable, the business or professional affiliation of the interested person.

Information is also available on the Institute's/Center's home page: *www.nichd.nih.gov/about/nachld.htm,* where an agenda and any additional information for the meeting will be posted when available.

(Catalogue of Federal Domestic Assistance Program Nos. 93.864, Population Research; 93.865, Research for Mothers and Children; 93.929, Center for Medical Rehabilitation Research; 93.209, Contraception and Infertility Loan Repayment Program, National Institutes of Health, HHS)

Dated: May 11, 2004.

LaVerne Y. Stringfield,

Director, Office of Federal Advisory Committee Policy.

[FR Doc. 04–11133 Filed 5–14–04; 8:45 am]

BILLING CODE 4140–01–M

DEPARTMENT OF HEALTH AND HUMAN SERVICES

National Institutes of Health

National Institute of Child Health and Human Development; Notice of Closed Meeting

Pursuant to section 10(d) of the Federal Advisory Committee Act, as amended (5 U.S.C. Appendix 2), notice is hereby given of the following meeting.

The meeting will be closed to the public in accordance with the provisions set forth in sections 552b(c)(4) and 552b(c)(6), Title 5 U.S.C., as amended. The grant applications and the discussions could disclose confidential trade secrets or commerical property such as patentable material, and personal information concerning individuals associated with the grant applications, the disclosure of which would constitute a clearly unwarranted invasion of personal privacy.

Name of Committee: National Institute of Child Health and Human Development Initial Review Group, Developmental Biology Subcommittee, Developmental Biology Subcommittee—CHHD–C.

Date: June 21–22, 2004.

Time: 8 a.m. to 3 p.m.

Agenda: To review and evaluate grant applications.

Place: the Fairmont Washington, DC, 2401 M Street, NW., Washington, DC 20037.

Contact Person: Norman Chang, PhD, Scientific Review Administrator, Division of Scientific Review, National Institute of Child Health and Human Development, NIH, 6100 Executive Blvd., Room 5B01, Bethesda, MD 20892, (301) 496–1485, *changn@mail.nih.gov.*

(Catalogue of Federal Domestic Assistance Program Nos. 93.864, Population Research; 93.865, Research for Mothers and Children; 93.929, Center for Medical Rehabilitation Research; 93.209, Contraception and Infertility Loan Repayment Program, National Institutes of Health, HHS)

Dated: May 11, 2004.

LaVerne Y. Stringfield,

Director, Office of Federal Advisory Committee Policy.

[FR Doc. 04–11134 Filed 5–4–04; 8:45 am]

BILLING CODE 4140–01–M

DEPARTMENT OF HEALTH AND HUMAN SERVICES

National Institutes of Health

National Institute of Arthritis and Musculoskeletal and Skin Disease; Notice of Closed Meetings

Pursuant to section 10(d) of the Federal Advisory Committee Act, as amended (5 U.S.C. Appendix 2), notice is hereby given of the following meetings.

The meetings will be closed to the public in accordance with the provisions set forth in sections 552b(c)(4) and 552b(c)(6), Title 5 U.S.C., as amended. The grant applications and the discussions could disclose confidential trade secrets or commercial property such as patentable material, and personal information concerning individuals associated with the grant applications, the disclosure of which would constitute a clearly unwarranted invasion of personal privacy.

Name of Committee: National institute of Arthritis and Musculoskeletal and Skin Diseases Special Emphasis Panel; Review of RFA–AR–04–002: high Risk Rheumatic and Musculoskeletal and Skin Diseases Research (R21s).

Date: June 10, 2004.

Time: 8:30 a.m. to 5 p.m.

Agenda: To review and evaluate grant applications.

Place: Holiday Inn Select, 8120 Wisconsin Avenue, Bethesda, MD 20814.

Contact Person: Aftab A. Ansari, PhD, Scientific Review Administrator, National Institute of Arthritis and Musculoskeletal and Skin Diseases, 6701 Democracy Plaza, Bethesda, MD 20892, (301) 594–4952.

Name of Committee: National Institute of Arthritis and Musculoskeletal and Skin Diseases Special Emphasis Panel, Review of RFA–AR–04–003: The Role of Innate Immunity in Autoimmune Rheumatic Diseases.

Date: June 17, 2004.

Time: 8:30 a.m. to 5 p.m.

Agenda: To review and evaluate grant applications.

Place: Residence Inn Bethesda, 7335 Wisconsin Avenue, Bethesda, MD 20814.

Contact Person: Aftab A. Ansari, PhD, Health Scientist Administrator, National Institute of Arthritis and Musculoskeletal and Skin Diseases, 6701 Democracy Plaza, Suite 800, Bethesda, MD 20892, (301) 594–4952.

(Catalogue of Federal Domestic Assistance Program Nos. 93.846, Arthritis, Musculoskeletal and Skin Diseases Research, National Institutes of Health, HHS)

Dated: May 11, 2004.

LaVerne Y. Stringfield,

Director, Office of Federal Advisory Committee Policy.

[FR Doc. 04–11135 Filed 5–14–04; 8:45 am]

BILLING CODE 4140–01–M

DEPARTMENT OF HEALTH AND HUMAN SERVICES

National Institutes of Health

National Institute of Diabetes and Digestive and Kidney Diseases; Notice of Closed Meeting

Pursuant to section 10(d) of the Federal Advisory Committee Act, as amended (5 U.S.C. appendix 2), notice is hereby given of the following meeting.

The meetings will be open to the public as indicated below, with attendance limited to space available. Individuals who plan to attend and need special assistance, such as sign language interpretation or other reasonable accommodations, should notify the Contact Person listed below in advance of the meeting.

The meetings will be closed to the public in accordance with the provisions set forth in sections 552b(c)(4) and 552b(c)(6), title 5 U.S.C., as amended. The grant applications and the discussions could disclose confidential trade secrets or commercial property such as patentable material, and personal information concerning individuals associated with the grant applications, the disclosure of which would constitute a clearly unwarranted invasion of personal privacy.

Name of Committee: National Institute of Diabetes and Digestive and Kidney Diseases Initial Review Group Kidney, Urologic and Hematologic Diseases D Subcommittee.

Date: June 10–11, 2004.

Open: June 10, 2004, 2 p.m. to 2:30 p.m.

Agenda: To review procedures and discuss policies.

Place: Crystal City Marriott, 2899 Jefferson Davis Highway, Arlington, VA 22202.

Closed: June 10, 2004, 2:30 p.m. to 5 p.m.

Agenda: To review and evaluate grant applications.

Place: Crystal City Marriott, 2899 Jefferson Davis Highway, Arlington, VA 22202.

Closed: June 11, 2004, 8 a.m. to 5 p.m.

Agenda: To review and evaluate grant applications.

Place: Crystal City Marriott, 2899 Jefferson Davis Highway, Arlington, VA 22202.

Contact Person: Neal A. Musto, PhD, Scientific Review Administrator, Review Branch, DEA, NIDDK, National Institutes of Health, Room 751, 6707 Democracy Boulevard, Bethesda, MD 20892, (301) 594–7798. *muston@extra.niddk.nih.gov.*

Name of Committee: National Institute of Diabetes and Digestive and Kidney Diseases

Initial Review Group Kidney, Endocrinology and Metabolic Diseases B Subcommittee.

Date: June 13–15, 2004.

Open: June 13, 2004, 7 p.m. to 7:30 p.m.

Agenda: To review and evaluate grant applications.

Place: Hampton Inn & Suites, 1201 Convention Center Blvd., New Orleans, LA 70130.

Closed: June 13, 2004, 7:30 p.m. to 10 p.m.

Agenda: To review and evaluate grant applications.

Place: Hampton Inn & Suites, 1201 Convention Center Blvd., New Orleans, LA 70130.

Closed: June 14, 2004, 8 a.m. to 5 p.m.

Agenda: To review and evaluate grant applications.

Place: Hampton Inn & Suites, 1201 Convention Center Blvd., New Orleans, LA 70130.

Closed: June 15, 2004, 8 a.m. to 5 p.m.

Agenda: To review and evaluate grant applications.

Place: Hampton Inn & Suites, 1201 Convention Center Blvd., New Orleans, LA 70130.

Contact Person: John F. Connaughton, PhD, Scientific Review Administrator, Review Branch, DEA, NIDDK, National Institutes of Health, Room 757, 6707 Democracy Boulevard, Bethesda, MD 20892, (301) 594–7798. *connaughtonj@extra.niddk.nih.gov.*

Name of Committee: National Institute of Diabetes and Digestive and Kidney Diseases Initial Review Group, Digestive Diseases and Nutrition C Subcommittee.

Date: June 30–July 1, 2004.

Open: June 30, 2004, 8 a.m. to 8:30 a.m.

Agenda: To review procedures and discuss policies.

Place: Hyatt Regency Crystal City, 2799 Jefferson Davis Highway, Arlington, VA 22202.

Closed: June 30, 2004, 8:30 a.m. to 5 p.m.

Agenda: To review and evaluate grant applications.

Place: Hyatt Regency Crystal City, 2799 Jefferson Davis Highway, Arlington, VA 22202.

Closed: July 1, 2004, 8 a.m. to 5 p.m.

Agenda: To review and evaluate grant applications.

Place: Hyatt Regency Crystal City, 2799 Jefferson Davis Highway, Arlington, VA 22202.

Contact Person: Paul A. Rushing, PhD, Scientific Review Administrator, Review Branch, DEA, NIDDK, National Institutes of Health, Room 747, 6707 Democracy Boulevard, Bethesda, MD 20892–5452, (301) 594–8895, *rushingp@extra.niddk.nih.gov.*

(Catalogue of Federal Domestic Assistance Program Nos. 93.847, Diabetes, Endocrinology and Metabolic Research; 93.848, Digestive Diseases and Nutrition Research; 93.849, Kidney Diseases, Urology and Hematology Research, National Institutes of Health, HHS)

Dated: May 11, 2004.

LaVerne Y. Stringfield,

Director, Office of Federal Advisory Committee Policy.

[FR Doc. 04–11136 Filed 5–14–04; 8:45 am]

BILLING CODE 4140–01–M

DEPARTMENT OF HEALTH AND HUMAN SERVICES

National Institutes of Health

National Library of Medicine; Notice of Closed Meeting

Pursuant to section 10(d) of the Federal Advisory Committee Act, as amended (5 U.S.C. Appendix 2), notice is hereby given of the following meeting.

The meeting will be closed to the public in accordance with the provisions set forth in sections 552b(c)(4) and 552b(c)(6), title 5 U.S.C., as amended. The grant applications and the discussions could disclose confidential trade secrets or commercial property such as patentable material, and personal information concerning individuals associated with the grant applications, the disclosure of which would constitute a clearly unwarranted invasion of personal privacy.

Name of Committee: Biomedical Library and Informatics Review Committee.

Date: June 10–11, 2004.

Time: June 10, 2004, 8 a.m. to 5 p.m.

Agenda: To review and evaluate grant applications.

Place: National Library of Medicine, Building 38, Board Room, 2nd Floor, 8600 Rockville Pike, Bethesda, MD 20892.

Time: June 11, 2004, 8 a.m. to 12:30 p.m.

Agenda: To review and evaluate grant applications.

Place: National Library of Medicine, Building 38, Board Room, 2nd Floor, 8600 Rockville Pike, Bethesda, MD 20892.

Contact Person: Hua-Chuan Sim, MD, Health Science Administrator, National Library of Medicine, Extramural Programs, Bethesda, MD 20892.

(Catalogue of Federal Domestic Assistance Program Nos. 93.879, Medical Library Assistance, National Institutes of Health, HHS)

Dated: May 6, 2004.

LaVerne Y. Stringfield,

Director, Office of Federal Advisory Committee Policy.

[FR Doc. 04–11092 Filed 5–14–04; 8:45 am]

BILLING CODE 4140–01–M

DEPARTMENT OF HEALTH AND HUMAN SERVICES

National Institutes of Health

Center for Scientific Review; Notice of Closed Meetings

Pursuant to section 10(d) of the Federal Advisory Committee Act, as amended (5 U.S.C. Appendix 2), notice is hereby given of the following meetings.

The meetings will be closed to the public in accordance with the provisions set forth in sections 552b(c)(4) and 552b(c)(6), title 5 U.S.C., as amended. The grant applications and the discussions could disclose confidential trade secrets or commercial property such as patentable material, and personal information concerning individuals associated with the grant applications, the disclosure of which would constitute a clearly unwarranted invasion of personal privacy.

Name of Committee: Oncological Sciences Integrated Review Group; Tumor Progression and Metastasis Study Section.

Date: June 2–3, 2004.

Time: 8 a.m. to 6 p.m.

Agenda: To review and evaluate grant applications.

Place: Holiday Inn Georgetown, 2101 Wisconsin Avenue, NW., Washington, DC 20007.

Contact Person: Martin L. Padarathsingh, PhD, Scientific Review Administrator, Center for Scientific Review, National Institutes of Health, 6701 Rockledge Drive, Room 6212, MSC 7804, Bethesda, MD 20892, (301) 435–1717, *padaratm@csr.nih.gov.*

Name of Committee: Respiratory Sciences Integrated Review Group; Lung Cellular, Molecular, and Immunobiology Study Section.

Date: June 2–3, 2004.

Time: 8 a.m. to 5 p.m.

Agenda: To review and evaluate grant applications.

Place: The Fairmont Washington, DC, 2401 M Street, NW., Washington, DC 20037.

Contact Person: George M. Barnas, PhD, Scientific Review Administrator, Center for Scientific Review, National Institutes of Health, 6701 Rockledge Drive, Room 2180, MSC 7818, Bethesda, MD 20892, 301–435–0696, *barnasg@csr.nih.gov.*

Name of Committee: Center for Scientific Review Special Emphasis Panel; ZRG1 MEDI 91S: Medical Imaging: Neuroradiology.

Date: June 2, 2004.

Time: 1 p.m. to 4 p.m.

Agenda: To review and evaluate grant applications.

Place: National Institutes of Health, 6701 Rockledge Drive, Bethesda, MD 20892, (Telephone Conference Call).

Contact Person: Eileen W. Bradley, DSc, Scientific Review Administrator, Center for Scientific Review, National Institutes of Health, 6701 Rockledge Drive, Room 5100, MSC 7854, Bethesda, MD 20892, (301) 435–1179, *bradleye@csr.nih.gov.*

Name of Committee: Endocrinology, Metabolism, Nutrition and Reproductive Sciences Integrated Review Group; Cellular Aspects of Diabetes and Obesity Study Section.

Date: June 2–4, 2004.

Time: 7:30 p.m. to 5 p.m.

Agenda: To review and evaluate grant applications.

Place: Hyatt Regency Bethesda, One Bethesda Metro Center, 7400 Wisconsin Avenue, Bethesda, MD 20814.

Contact Person: Ann A. Jerkins, PhD, Scientific Review Administrator, Center for Scientific Review, National Institutes of Health, 6701 Rockledge Drive, Room 6154, MSC 7892, Bethesda, MD 20892, 301–435–4514, *jerkinsa@csr.nih.gov.*

Name of Committee: Center for Scientific Review Special Emphasis Panel; Innovative Research Topics in Virology.

Date: June 3–4, 2004.

Time: 8 a.m. to 5 p.m.

Agenda: To review and evaluate grant applications.

Place: Holiday Inn Select, Old Towne Alexandria, 480 King Street, Alexandria, VA 22314.

Contact Person: Joseph D. Mosca, PhD, Scientific Review Administrator, Center for Scientific Review, National Institutes of Health, 6701 Rockledge Drive, Room 5158, MSC 7808, Bethesda, MD 20892, (301) 435–2344, *moscajos@csr.nih.gov.*

Name of Committee: Cell Development and Function Integrated Review Group; Cell Development and Function 4.

Date: June 3–4, 2004.

Time: 8 a.m. to 5 p.m.

Agenda: To review and evaluate grant applications.

Place: Melrose Hotel, 2430 Pennsylvania Ave., NW., Washington, DC 20037.

Contact Person: Alexandra Ainsztein, PhD, Scientific Review Administrator, Center for Scientific Review, National Institutes of Health, 6701 Rockledge Drive, Room 5144, MSC 7840, Bethesda, MD 20892, (301) 451–3848, *ainsztea@csr.nih.gov.*

Name of Committee: Cell Development and Function Integrated Review Group, Cell Development and Function 2.

Date: June 3–4, 2004.

Time: 8:30 a.m. to 5 p.m.

Agenda: To review and evaluate grant applications.

Place: Latham Hotel, 3000 M Street, NW., Washington, DC 20007.

Contact Person: Ramesh K. Nayak, PhD, Scientific Review Administrator, Center for Scientific Review, National Institutes, 6701 Rockledge Drive, Room 5145, MSC 7840, Bethesda, MD 20892, (301) 435–1026, *nayakr@csr.nih.gov.*

Name of Committee: Biobehavioral and Behavioral Processes Initial Review Group; Biobehavioral Regulation, Learning and Ethology Study Section.

Date: June 3–4, 2004.

Time: 9 a.m. to 5 p.m.

Agenda: To review and evaluate grant applications.

Place: Radisson Barcello, 2121 P Street, NW., Washington, DC 20037.

Contact Person: Luci Roberts, PhD, Scientific Review Administrator, Center for Scientific Review, National Institutes of Health, 6701 Rockledge Drive, Room 3188, MSC 7848, Bethesda, MD 20892, (301) 435–0692, *roberlu@csr.nih.gov.*

Name of Committee: Center for Scientific Review Special Emphasis Panel; Responses to Viral Infections.

Date: June 4, 2004.

Time: 4:45 p.m. to 5:45 p.m.

Agenda: To review and evaluate grant applications.

Place: Holiday Inn Select, 480 King Street, Alexandria, VA 22314.

Contact Person: Joanna M. Pyper, PhD, Scientific Review Administrator, Center for Scientific Review, National Institutes of Health, 6701 Rockledge Drive, Room 3198, MSC 7808, Bethesda, MD 20892, (301) 435–1151, *pyperj@csr.nih.gov.*

Name of Committee: Biophysical and Chemical Sciences Integrated Review Group; Metallobiochemistry Study Section.

Date: June 7, 2004.

Time: 8 a.m. to 7 p.m.

Agenda: To review and evaluate grant applications.

Place: The Watergate Hotel, 2650 Virginia Ave., NW., Washington, DC 20037.

Contact Person: Janel Nelson, PhD, Scientific Review Administrator, Center for Scientific Review, National Institutes of Health, 6701 Rockledge Drive, Room 4168, MSC 7806, Bethesda, MD 20892, 301–435–1723, *nelsonja@csr.nih.gov.*

Name of Committee: Surgical Sciences, Biomedical Imaging and Bioengineering Integrated Review Group; Biomedical Imaging Technology Study Section.

Date: June 7–8, 2004.

Time: 8 a.m. to 4 p.m.

Agenda: To review and evaluate grant applications.

Place: Embassy Suites at the Chevy Chase Pavilion, 4300 Military Road, NW., Washington, DC 20015.

Contact Person: Lee Rosen, PhD, Scientific Review Administrator, Center for Scientific Review, National Institutes of Health, 6701 Rockledge Drive, Room 5116, MSC 7854, Bethesda, MD 20892, (301) 435–1171, *rosenl@csr.nih.gov.*

Name of Committee: Surgical Sciences, Biomedical Imaging and Bioengineering Integrated Review Group; Medical Imaging Study Section.

Date: June 7–8, 2004.

Time: 8 a.m. to 5 p.m.

Agenda: To review and evaluate grant applications.

Place: Embassy Suites at the Chevy Chase Pavilion, 4300 Military Road, NW., Washington, DC 20015.

Contact Person: Eileen W. Bradley, DSc, Scientific Review Administrator, Center for Scientific Review, National Institutes of Health, 6701 Rockledge Drive, Room 5120, MSC 7854, Bethesda, MD 20892, (301) 435–1179, *bradleye@csr.nih.gov.*

Name of Committee: Biobehavioral and Behavioral Processes Initial Review Group; Biobehavioral Mechanisms of Emotion, Stress and Health Study Section.

Date: June 7, 2004.

Time: 9 a.m. to 6 p.m.

Agenda: To review and evaluate grant applications.

Place: Georgetown Suites, 1000 29th Street, NW., Washington, DC 20007.

Contact Person: Thomas A. Tatham, PhD, Scientific Review Administrator, Center for Scientific Review, National Institutes of Health, 6701 Rockledge Drive, Room 3178, MSC 7848, Bethesda, MD 20892, (301) 594–6836, *tathamt@csr.nih.gov.*

Name of Committee: Center for Scientific Review Special Emphasis Panel; ZRG1 SBIB–G: PAR04–023 Bioengineering Research Partnerships.

Date: June 7, 2004.

Time: 9 a.m. to 3 p.m.

Agenda: To review and evaluate grant applications.

Place: Holiday Inn Select Bethesda, 8120 Wisconsin Ave., Bethesda, MD 20814.

Contact Person: Paul F. Parakkal, PhD, Scientific Review Administrator, Center for Scientific Review, National Institutes of Health, 6701 Rockledge Drive, Room 5122 MSC 7854, Bethesda, MD 20892, (301) 435–1176, *parakkap@csr.nih.gov.*

Name of Committee: Center for Scientific Review Special Emphasis Panel, ZRG1 SBIB–M 02M:Member Conflict:Medical Imaging.

Date: June 7, 2004.

Time: 1 p.m. to 1:30 p.m.

Agenda: To review and evaluate grant applications.

Place: Embassy Suites at the Chevy Chase Pavilion, 4300 Military Road, NW., Washington, DC 20015.

Contact Person: Keyvan Farahari, PhD, Scientific Review Administrator, Center for Scientific Review, National Institutes of Health, 6701 Rockledge Drive, Room 5120 MSC 7854, Bethesda, MD 20892, (301) 435–1163.

Name of Committee: Integrative, Functional and Cognitive Neuroscience Integrated Review Group; Sensorimotor Integration Study Section.

Date: June 8, 2004.

Time: 8 a.m. to 6 p.m.

Agenda: To review and evaluate grant applications.

Place: Governor's House Hotel, 1615 Rhode Island Avenue, NW., Washington, DC 20036.

Contact Person: John Bishop, PhD, Scientific Review Administrator, Center for Scientific Review, National Institutes of Health, 6701 Rockledge Drive, Room 5180 MSC 7844, Bethesda, MD 20892, (301) 435–1250.

Name of Committee: Integrative, Functional and Cognitive Neuroscience Integrated Review Group; Auditory System Study Section.

Date: June 8–9, 2004.

Time: 8:30 a.m. to 5 p.m.

Agenda: To review and evaluate grant applications.

Place: Governor's House Hotel, 1615 Rhode Island Avenue, NW., Washington, DC 20036.

Contact Person: Joseph Kimm, PhD, Scientific Review Administrator, Center for Scientific Review, National Institutes of Health, 6701 Rockledge Drive, Room 5178 MSC 7844, Bethesda, MD 20892, (301) 435–1249, *kimmj@csr.nih.gov.*

(Catalogue of Federal Domestic Assistance Program Nos. 93.306, Comparative Medicine; 93.333, Clinical Research, 93.306, 93.333, 93.337, 93.393–93.396, 93.837–93.844, 93.846–93.878, 93.892, 93.893, National Institutes of Health, HHS)

Dated: May 6, 2004.

LaVerne Y. Stringfield,

Director, Office of Federal Advisory Committee Policy.

[FR Doc. 04–11094 Filed 5–14–04; 8:45 am]

BILLING CODE 4140–01–M

DEPARTMENT OF HEALTH AND HUMAN SERVICES

National Institutes of Health

Center for Scientific Review; Amended Notice of Meeting

Notice is hereby given of a change in the meeting of the Center for Scientific Review Special Emphasis Panel, May 25, 2004, 8:30 a.m. to May 25, 2004, 5 p.m., Hyatt Regency Bethesda, One Bethesda Metro Center, 7400 Wisconsin Avenue, Bethesda, MD, 20814 which was published in the **Federal Register** on April 29, 69 FR 23517.

The meeting will be held at The Latham Hotel, 3000 M Street, NW., Washington, DC 2007. The date and time remain the same. The meeting is closed to the public.

Dated: May 6, 2004.

LaVerne Y. Stringfield,

Director, Office of Federal Advisory Committee Policy.

[FR Doc. 04–11096 Filed 5–14–04; 8:45 am]

BILLING CODE 4140–01–M

DEPARTMENT OF HEALTH AND HUMAN SERVICES

National Institutes of Health

Prospective Grant of Exclusive License: 1,8-Naphthalimide Imidazo [4,5,1-de] Acridones With Anti-Tumor Activity

AGENCY: National Institutes of Health, Public Health Service, DHHS.

ACTION: Notice.

SUMMARY: This is notice, in accordance with 35 U.S.C. 209(c)(1) and 37 CFR part 404.7(a)(1)(i), that the National Institutes of Health, Department of Health and Human Services, is contemplating the grant of an exclusive patent license to practice the inventions embodied in U.S. Patent 6,664,263 issued December 16, 2003, entitled ''1,8-Naphthalimide Imidazo [4,5,1-de] Acridones with Anti-Tumor Activity'' (DHHS Reference No. E–289–1999/0), and all related foreign patents/patent applications, to Reata Discovery, Inc., which is located in Richardson, TX. The patent rights in these inventions have been assigned to the United States of America.

The prospective exclusive license territory will be worldwide and the field of use may be limited to human pharmaceutical uses of 1,8-naphthalimide imidazo [4,5,1-de] acridones as anti-cancer agents.

DATES: Only written comments and/or applications for a license which are received by the NIH Office of Technology Transfer on or before July 16, 2004 will be considered.

ADDRESSES: Requests for copies of the patent, inquiries, comments and other materials relating to the contemplated exclusive license should be directed to: George G. Pipia, Ph.D., Technology Licensing Specialist, Office of Technology Transfer, National Institutes of Health, 6011 Executive Boulevard, Suite 325, Rockville, MD 20852–3804; Telephone: (301) 435–5560; Facsimile: (301) 402–0220; and e-mail: *pipiag@mail.nih.gov.*

SUPPLEMENTARY INFORMATION: The present invention relates to novel bifunctional molecules with anti-tumor activity. These agents are composed of an imidazoacridone moiety linked by a nitrogen containing aliphatic chain of various length and rigidity to another aromatic ring system capable of intercalation to DNA.

Previous studies on related symmetrical bis-imidazoacridones revealed that only one planar imidazoacridone moiety intercalates into DNA. The second aromatic moiety, which is crucial for biological activity, resides in a DNA groove, and is believed to interact with DNA-binding proteins. It is hypothesized that the action of bis-imidazoacridone constitutes a new paradigm of how small molecules can interfere with the gene transcription.

To enhance the biological activity, the inventors have developed asymmetrical compounds in which one imidazoacridone system, with relatively poor DNA-intercalating properties, was replaced with much stronger intercalators, such as 3-chloro-7-methoxyacridine or naphthalimide moieties. These new compounds, especially those containing a naphthalimide moiety, are extremely *cytotoxic in vitro* against variety of tumor cells (IC50 at low nanomolar range) and kill tumor cells by inducing apoptosis. *In vivo,* in nude mice xenografted with human tumors, the compounds significantly inhibited growth of such tumors as colon tumor HCT116 and Colo205 as well as pancreatic tumors.

The prospective exclusive license will be royalty bearing and will comply with the terms and conditions of 35 U.S.C. 209 and 37 CFR part 404.7. The prospective exclusive license may be granted unless within sixty (60) days from the date of this published notice, the NIH receives written evidence and argument that establish that the grant of the license would not be consistent with the requirements of 35 U.S.C. 209 and 37 CFR part 404.7.

Applications for a license in the field of use filed in response to this notice will be treated as objections to the grant of the contemplated exclusive license. Comments and objections submitted to this notice will not be made available for public inspection and, to the extent permitted by law, will not be released under the Freedom of Information Act, 5 U.S.C. 552.

Dated: May 7, 2004.

Steven M. Ferguson,

Director, Division of Technology Development and Transfer, Office of Technology Transfer, National Institutes of Health.

[FR Doc. 04–11088 Filed 5–14–04; 8:45 am]

BILLING CODE 4140–01–P

DEPARTMENT OF HEALTH AND HUMAN SERVICES

National Institutes of Health

Request for Public Comment on a Written Request Issued by the Food and Drug Administration in the Use of Azithromycin for the Treatment of *Ureaplasma urealyticum* Pneumonia in the Preterm Neonate and Prevention of Bronchopulmonary Dysplasia

ACTION: Notice.

SUMMARY: The National Institutes of Health (NIH) is requesting public comment on the following Written Request issued by the Food and Drug Administration (FDA) for off-patent drugs as defined in the Best Pharmaceuticals for Children Act (BPCA). The Written Request was referred to NIH by FDA as required by the BPCA. The Written Request was developed following formulation of an NIH-generated priority list, which prioritizes certain drugs most in need of study for use by children. The priority list was produced in consultation with the FDA, other NIH Institutes and Centers, and pediatric experts, as mandated by the BPCA. The studies that are described in the Written Request are intended to characterize the safety, efficacy, and pharmacokinetics of the drug for optimum use in pediatric patients.

DATES: Comments are requested within 90 days of publication of this notice.

ADDRESSES: Submit comments to: Anne Zajicek, M.D., Pharm. D., National Institute of Child Health and Human Development, 6100 Executive Boulevard, Suite 4B–09, Bethesda, MD 20892–7510, telephone 301–435–6865 (not a toll-free number), e-mail *BestPharmaceuticals@mail.nih.gov.*

FOR FURTHER INFORMATION CONTACT: Anne Zajicek, M.D., Pharm. D., National Institute of Child Health and Human Development, 6100 Executive Boulevard, Suite 4B–09, Bethesda, MD 20892–7510, telephone 301–435–6865 (not a toll-free number), e-mail *BestPharmaceuticals@mail.nih.gov.*

SUPPLEMENTARY INFORMATION: The NIH is providing notice of Written Requests issued by the FDA, and is requesting public comment. On January 4, 2002, President Bush signed into law the Best Pharmaceuticals for Children Act (BPCA). The BPCA mandates that NIH, in consultation with the FDA and experts in pediatric research, shall develop, prioritize, and publish an annual list of certain approved drugs for which pediatric studies are needed. In response to this list, the FDA then issues a Written Request to holders of the New Drug Application (NDA) or abbreviated New Drug Application (aNDA) to request that pediatric studies be performed in order to provide needed safety and efficacy information for pediatric labeling. If the Written Request is declined by the NDA/aNDA holder (s), the Written Request is referred to NIH, specifically the NICHD. A Request for Proposal (RFP) is then issued based on the Written Request, and proposals are reviewed by a peer-review process for contract award.

In order to assure that the most appropriate pediatric studies are delineated in the RFP, public comment of the Written Requests for the use of azithromycin in treatment of Ureaplasma urealyticum pneumonia in the preterm neonate and prevention of bronchopulmonary dysplasia is hereby requested by NIH.

Dated: May 10, 2004.

Duane Alexander,

Director, National Institute for Child Health and Human Development, National Institutes of Health.

Azithromycin Written Request

Dear Contact: To obtain pediatric information on the use of intravenous azithromycin, the FDA is hereby making a formal Written Request, pursuant to section 505A of the Federal Food, Drug and Cosmetic Act, that you submit information from studies in pediatric patients described below.

Rationale

Respiratory tract colonization with Ureaplasma urealyticum may be a factor in the development of neonatal bronchopulmonary dysplasia (BPD). Although this has not been proven, macrolide antibiotics have been used to eradicate U. urealyticum colonization from the respiratory tract in this subpopulation. Literature suggests that macrolide antibiotics may also have an anti-inflammatory effect. The objective of these studies will be to investigate the safety and effectiveness of intravenous azithromycin for the prevention of BPD in preterm neonates colonized with U. urealyticum.

Azithromycin offers several potential advantages for treatment of U. urealyticum-colonized premature neonates. In vitro data indicate that U. urealyticum is susceptible to azithromycin. The intracellular accumulation of azithromycin and its tissue penetration are potential advantages for the treatment of intracellular pathogens. Azithromycin is likely to have fewer drug interactions than the other macrolides, since it is minimally metabolized and has a low potential to inhibit hepatic CYP 450 isozymes. However, there is minimal information about azithromycin dosing, efficacy, and safety in the neonatal period. Further, some macrolide antibiotics have been associated with adverse effects, such as pyloric stenosis and cardiac arrhythmias, and it is unknown whether azithromycin carries similar risk.

Types of Studies

(1) Single Dose Pharmacokinetic (PK) Study:

- To characterize single dose intravenous (I.V.) azithromycin pharmacokinetics, safety and tolerability in mechanically ventilated preterm neonatal patients with U. urealyticum endotracheal colonization at one or more clinically relevant doses.

(2) Multiple-dose, Exposure Response Study(-ies):

- To assess the effect of two or more dose regimens of I.V. azithromycin on U. urealyticum colonization of the respiratory tract of preterm neonatal patients.
- To characterize multiple-dose PK and safety of I.V. azithromycin.
- To determine appropriate testing methods for documentation of U. urealyticum colonization and eradication.
- To explore potential for azithromycin clinical effectiveness.

(3) Efficacy and Safety Studies:

- Two studies that each assesses I.V azithromycin efficacy and safety for the prevention of BPD in mechanically ventilated preterm neonatal patients with U. urealyticum endotracheal colonization.

These studies will be performed in the above sequence and results of each study submitted to and assessed by FDA prior to proceeding with the next study(ies). Results from the single dose PK study would be used in planning the exposure-response study(ies). Similarly, results from the exposure response study(ies) will be used, to the extent possible, for planning safety and efficacy studies.

Age Group in Which Studies Will Be Performed

Studies will be performed in preterm neonatal patients <72 hours of age.

Entry Criteria

Preterm male and female patients <72 hours of age who are at least 23 weeks gestational age and 500 grams weight at time of birth will be eligible for enrollment in the studies. These patients will be endotracheally intubated, mechanically ventilated and have vascular access at the time of randomization. Patients must have documented U. urealyticum endotracheal colonization at the time of randomization.

Patients for whom a decision has been made to withdraw medical support, or in whom potentially lethal congenital defect(s) has been diagnosed by the medical team, are not eligible for study. Patients with central nervous system infections suspected to be due to U. urealyticum will be excluded. The protocol will specify additional criteria for study inclusion/exclusion, including when there has been antenatal maternal treatment with a macrolide or sulfa containing antibiotic.

Study Design

Criteria for withdrawal of individual patients from any study will be defined in the protocol.

An independent Data Monitoring Committee (DMC) will be established for all exposure-response and safety and efficacy studies. The study stopping rules used by the DMC will be specified in all protocols.

Study Types 1 and 2: Studies that assess pharmacokinetics may use sparse sampling and population PK approach to minimize blood loss to individual patients. Bioanalytical methods to determine azithromycin concentrations must be capable of evaluating microliter sample volumes. Patients will be grouped by gestational age. A rationale will be provided for the grouping of patients by gestational age.

Appropriate testing methods for documentation of U. urealyticum colonization in the safety and efficacy trials will in part be determined from the exposure-response study(ies). Study(ies) Type 2 will use both endotracheal culture and polymerase chain reaction (PCR) as methods for

establishing respiratory tract colonization and the microbiological effect of azithromycin treatment. Additionally, Study(ies) Type 2 will evaluate the relationship between azithromycin dose and/or plasma exposure and microbiological eradication, and will explore potential for azithromycin clinical effectiveness.

Study Type 3: Two studies that assess efficacy and safety will be multicenter, randomized, double blind, and placebo controlled. There are numerous potential factors related to clinical management of sick preterm infants that may impact on the development of BPD (e.g. prenatal corticosteroids, postnatal corticosteroids, surfactant, type and mode of ventilation, inspired oxygen concentration (FiO2), fluid and electrolyte management and infant nutrition, vitamin A, congenital and nosocomial infections/pneumonia). The study will track and evaluate factors that may contribute to the development of BPD.

Patients will be stratified by gestational age in efficacy and safety studies. Other factors such as maternal chorioamnionitis and disease severity may be additionally considered. The rationale for patient stratification will be provided in protocols.

Number of Patients

Study Types 1 and 2: A sufficient number of patients to characterize single-dose and multiple dose pharmacokinetics will complete these studies. The protocol for these studies will be discussed with the FDA and agreed upon prior to initiation of the studies. Preterm neonates will be reasonably distributed by gender. The gestational age of these patients will reflect gestational age range of the efficacy and safety studies.

Study Type 3: Efficacy and safety studies will enroll a sufficient number of patients to ensure at least 80% statistical power to determine a treatment effect, at a 0.05 statistical significance level (two-tailed). All parameter estimates used in the sample size calculation will be specified and justified in the protocol.

Assessment Parameters

Pharmacokinetics (Studies Type 1 and 2): The plasma clearance and volume of distribution of I.V. azithromycin will be calculated and other PK parameters such as the maximum plasma concentration (C_{max}), time of C_{max} (T_{max}), area under the plasma concentration-time curve from zero to the last quantifiable concentration (AUC_{0-t}), the elimination rate constant (Ke), terminal elimination half-life ($t_{1/2}$), and AUC extrapolated to infinity ($AUC_{0-\infty}$) will be determined to the extent possible. Adequate rationale for excluding any of the aforementioned PK parameters will be provided. The protein binding of azithromycin should be determined over the range of clinically relevant concentrations.

Pharmacodynamics (Study(ies) Type 2): Microbiologic persistence of U. urealyticum will be assessed by culture and PCR.

Efficacy (Studies Type 2 and 3): For Study(ies) Type 2, endpoints for efficacy will be explored. For powered efficacy and safety studies (Study Type 3), the protocol will specify a clinically meaningful primary endpoint to assess the treatment effect of azithromycin. Examples of such endpoints may include survival without severe BPD, survival without BPD, incidence of BPD, or incidence of severe BPD. A definition of BPD will be specified in the protocol. This protocol definition must include BPD diagnostic criteria and address how a patient's requirement for supplemental oxygen will be determined.

Secondary endpoints will include overall mortality, incidence of co-morbidities of prematurity, number of days on the ventilator, number of days receiving oxygen supplementation, use of non-study antibiotics, and adverse events. Endpoints may also include the microbiological persistence of Ureaplasma.

Safety (Studies Types 1–3): Laboratory tests for safety must be performed on microliter serum samples. In addition, safety assessments will include occurrence of any adverse events (AEs), comorbidities of prematurity {*e.g.*, necrotizing enterocolitis (NEC), sepsis, retinopathy of prematurity (ROP), intraventricular hemorrhage (IVH), periventricular leukomalacia (PVL), patent ductus arteriosus (PDA)}, incidence of superinfections (particularly fungal infections), vital signs that include heart rate (HR), blood pressure (BP), respiratory rate (RR), pulse oximetry, electrocardiogram (EKG), standard laboratory assessments of hematologic, liver and renal function, assessments of hearing, and growth (weight, length and head circumference). AEs will be followed to their resolution or stabilization. Nosocomial infection will be tracked by pathogen.

Long-term outcomes (Study Type 3): Assessments of growth, neurodevelopmental and pulmonary outcomes will be performed. These assessments may include, but are not limited to, weight, length, head circumference, physical examination with neurologic assessment, neurodevelopmental evaluation using a validated instrument, adverse events, hospitalization with emphasis on reactive airway disease and infection, medication history and use of oxygen. Provisions for these assessments may be included in the safety and efficacy protocols, or these assessments may be included in additional study protocols. At a minimum, long-term assessments will be performed through 24 months of the patient's chronological age.

Drug Information

Dosage form: Approved intravenous formulation.

Route: Intravenous.

Regimen: To be determined.

Selection of doses in the single-dose studies will be guided by literature or current medical practice. Doses chosen for the subsequent trials will be guided by the results of preceding studies.

Drug Specific Safety Concerns

1. It is unknown whether azithromycin has an adverse events profile similar to that reported for other macrolide antibiotics. These include hypertrophic pyloric stenosis, and cardiac arrhythmias.

2. It is unknown whether there will be any adverse effects in this patient population related to the occurrence of phospholipidosis with azithromycin.

3. Colonization and infection with other bacterial (including macrolide-resistant organisms) and nonbacterial organisms (*e.g.*, fungus) may occur with azithromycin treatment.

4. Macrolides have been associated with hearing loss at high doses. The potential for hearing loss with azithromycin treatment in this population will be assessed.

Statistical Information

These studies must have a pre-specified and detailed statistical analysis plan appropriate to the study design and outcome measures. It will be discussed with the FDA and agreed upon prior to initiating studies.

Demographic and safety data will be tabulated and descriptive analysis of safety data will be provided. Descriptive statistics of pharmacokinetic data must also be provided and dose-response relationships and relationships between PK parameters and patient characteristics will also be explored.

Labeling that May Result From the Study(ies)

Appropriate sections of the label may be changed to incorporate the findings of the studies.

Format of Reports To Be Submitted

Full study reports not previously submitted to the Agency, addressing the issues outlined in this request with full analysis (including assay method validation information), assessment, and interpretation. In addition, the reports are to include information on the representation of pediatric patients of ethnic and racial minorities.

Response to Written Request

As per the Best Pharmaceuticals for Children Act, section 3, if we do not hear from you within 30 days of the date of this Written Request, we will refer this Written Request to the Director of the NIH. If you agree to the request, then you must indicate when the pediatric studies will be initiated.

Please submit protocols for the above studies to an investigational new drug application (IND) and clearly mark your submission ''PEDIATRIC PROTOCOL SUBMITTED IN RESPONSE TO WRITTEN REQUEST'' in large font, bolded type at the beginning of the cover letter of the submission. Please notify us as soon as possible if you wish to enter into a written agreement by submitting a proposed written agreement. Clearly mark your submission ''PROPOSED WRITTEN AGREEMENT FOR PEDIATRIC STUDIES'' in large font, bolded type at the beginning of the cover letter of the submission. Reports of the studies should be submitted as a new drug application (NDA) or as a supplement to an approved NDA with the proposed labeling changes you believe would be warranted based on the data derived from these studies. When submitting the reports, please clearly mark your submission ''SUBMISSION OF PEDIATRIC STUDY REPORTS—COMPLETE RESPONSE TO WRITTEN REQUEST'' in large font, bolded type at the beginning of the cover letter of the submission and include a copy of this letter. If you wish to discuss any amendments to this Written Request, please submit proposed changes and the reasons for the proposed changes to your application. Submissions of proposed changes to this request should be clearly marked ''PROPOSED CHANGES IN WRITTEN REQUEST FOR PEDIATRIC STUDIES'' in large font, bolded type at the beginning of the cover letter of the submission. You will be notified in writing if any changes to this Written Request are agreed to by the Agency.

We hope you will fulfill this pediatric study request. We look forward to working with you on this matter in order to develop additional pediatric information that may produce health benefits in the pediatric population.

If you have any questions, call NAME at PHONE NUMBER.

[FR Doc. 04–11062 Filed 5–14–04; 8:45 am]

BILLING CODE 4140–01–P

DEPARTMENT OF HEALTH AND HUMAN SERVICES

National Institutes of Health

Request for Public Comment on a Written Request Issued by the Food and Drug Administration in the Use of Rifampin for the Treatment of Bacterial Endocarditis Caused by Methicillin-Resistant *Staphylococcus aureus*

ACTION: Notice.

SUMMARY: The National Institutes of Health (NIH) is requesting public comment on the following Written Request issued by the Food and Drug Administration (FDA) for off-patent drugs as defined in the Best Pharmaceuticals for Children Act (BPCA). The Written Request was referred to NIH by the FDA as required by the BPCA.

The Written Request was developed following formulation of an NIH-generated priority list, which prioritizes certain drugs most in need of study for use by children. The priority list was produced in consultation with the FDA, other NIH Institutes and Centers, and pediatric experts, as mandated by the BPCA. The studies that are described in the Written Request are intended to characterize the safety, efficacy, and pharmacokinetics of the drug for optimum use in pediatric patients.

DATES: Comments are requested within 90 days of publication of this notice.

ADDRESSES: Submit comments to: Anne Zajicek, M.D., Pharm.D., National Institute of Child Health and Human Development, 6100 Executive Boulevard, Suite 4B–09, Bethesda, MD 20892–7510, telephone 301–435–6865 (not a toll-free number), e-mail *BestPharmaceuticals@mail.nih.gov.*

FOR FURTHER INFORMATION CONTACT: Anne Zajicek, M.D., Pharm.D., National Institute of Child Health and Human Development, 6100 Executive Boulevard, Suite 4B–09, Bethesda, MD 20892–7510, telephone 301–435–6865 (not a toll-free number), e-mail *BestPharmaceuticals@mail.nih.gov.*

SUPPLEMENTARY INFORMATION: The NIH is providing notice of Written Requests issued by the FDA, and is requesting public comment. On January 4, 2002, President Bush signed into law the Best Pharmaceuticals for Children Act (BPCA). The BPCA mandates that NIH, in consultation with the FDA and experts in pediatric research, shall develop, prioritize, and publish an annual list of certain approved drugs for which pediatric studies are needed. In response to this list, the FDA then issues a Written Request to holders of the New Drug Application (NDA) or abbreviated New Drug Application (aNDA) to request that pediatric studies be performed in order to provide needed safety and efficacy information for pediatric labeling. If the Written Request is declined by the NDA/aNDA holder(s), the Written Request is referred to NIH, specifically the NICHD. A Request for Proposal (RFP) is then issued based on the Written Request, and proposals are reviewed by a peer-review process for contract award. In order to assure that the most appropriate pediatric studies are delineated in the RFP, public comment of the Written Requests for the use of Rifampin for the treatment of bacterial endocarditis caused by methicillin-resistant S. aureus in pediatric patients is hereby requested by the NIH.

Dated: May 11, 2004.

Duane Alexander,

Director, National Institute for Child Health and Human Development, National Institutes of Health.

Rifampin Written Request

Dear Contact: To obtain needed pediatric information on this active moiety, the Food and Drug Administration (FDA) is hereby making a formal Written Request, pursuant to section 505A of the Federal Food, Drug, and Cosmetic Act (the Act), that you submit information from studies in pediatric patients described below. These studies investigate the use of rifampin for the management of infectious bacterial endocarditis in pediatric patients.

Background and Rationale

Infective endocarditis (IE) is a serious, life-threatening infection that requires hospitalization. The frequency of IE in hospitalized pediatric patients reported in the literature varies widely. The most widely quoted estimates are 55 to 78 cases of IE per 100,000 pediatric hospital admissions (PHA) but rates as low as 22/100,000 PHA and as high as 200/100,000 have been cited in the literature. Most of these estimates are individual hospital-based retrospective reviews. In a larger survey of 26 major cardiovascular medical center hospitals, Kaplan et. al. reported an average 11 cases of IE per center per year.

There are no published population-based national incidence data of IE in the pediatric population in the United States. The U.S. Hospitalcare Cost and Utilization Project (HCUP) reported 1012 pediatric hospitalizations for endocarditis in the year 2000, of which 657 were coded as acute/sub-acute bacterial endocarditis. Other literature suggests that the frequency of IE in the pediatric age population seems to be increasing primarily due to the improved survival rates of children who are at increased risk for endocarditis, such as those with congenital heart disease and hospitalized newborn infants. An increased use of indwelling central venous catheters in the pediatric population may also be a contributing factor in the possible increasing frequency of pediatric IE.

Although IE occurs relatively infrequently in the pediatric population, it is a serious condition associated with considerable morbidity and mortality and the incidence of IE may be increasing. Mortality estimates for patients with IE reported in the literature range from 10 to greater than 40 percent. IE due to S. aureus is usually associated with higher mortality rates than IE due to other common bacterial etiologies. A recent study reported a mortality rate of 42% within 3 months of diagnosis in patients with prosthetic valve IE due to S. aureus.

In children, staphylococci are a frequent cause of IE. Staphylococcus aureus is the leading cause of acute bacterial endocarditis in children. S. aureus and coagulase negative staphylococci are frequent causes of IE associated with prosthetic heart valves, prosthetic material, and indwelling vascular catheters.

Increasing rates of antimicrobial resistance in staphylococci have made treatment of serious staphylococcal infections more difficult. In 2000, 55% of S. aureus isolates in hospitalized patients reported to the national nosocomial infection surveillance system were methicillin resistant. Coagulase negative staphylococci are usually methicillin resistant, especially in the setting of endocarditis occurring within one year of cardiac surgery.

A recent scientific statement from the American Heart Association provides treatment guidelines for pediatric patients with staphylococcus endocarditis. For native valve endocarditis due to methicillin-resistant staphylococci, the guidelines recommend treatment with vancomycin with or without gentamicin for the first 3 to 5 days of therapy. For staphylococcal endocarditis on prosthetic cardiac valves or other cardiac prosthetic material, the guidelines recommend treatment with a regimen of vancomycin and rifampin with the addition of gentamicin for the first two weeks of therapy. The AHA guidelines also discuss the role for a combined medical-surgical approach to the management of S. aureus prosthetic valve endocarditis. The AHA guidelines represent recommendations from an expert panel based upon evidence derived largely from clinical studies in adults.

There is incomplete information about dosing, pharmacokinetic (PK) parameters, effectiveness, and safety of rifampin in the treatment of staphylococcal endocarditis in children and no adequate and well controlled clinical trials have been performed in children. Rifampin is not currently indicated for the treatment of staphylococcal endocarditis in the FDA-approved package labeling.

Types of Studies

A single trial to evaluate the safety and efficacy of rifampin in the pediatric population when used in the treatment of infective endocarditis due to methicillin-resistant S. aureus (MRSA) or coagulase negative staphylococci. Patients who are enrolled are to be stratified by:

(a) Patients with native valve endocarditis due to MRSA.

(b) Patients with a prosthetic heart valve or other prosthetic cardiac material and endocarditis due to either MRSA or coagulase negative staphylococci.

Different protocol-specified antimicrobial therapy may be used in the study for the native valve endocarditis (stratum ''a'' above) and prosthetic material endocarditis (stratum ''b'' above). Within each stratum, the group receiving rifampin plus other protocol-specified antimicrobial therapy will be compared to the control group of the same stratum not receiving rifampin (*i.e.*, receiving only the ''other protocol-specified antimicrobial therapy'').

This study must also include a sub-study describing the pharmacokinetics of oral and intravenous rifampin in children with endocarditis who are ages:

(1) 1 month to <2 years.
(2) 2 years to <6 years.
(3) 6 years to <12 years.
(4) 12 years to 16 years.

Full rifampin plasma concentration versus time profiles, using sparse sampling, will be determined for each group to characterize the pharmacokinetics of rifampin. [Relevant FDA guidance documents regarding pharmacokinetic evaluation are available at the FDA Web site (*http://www.fda.gov/cder/guidance/index.htm*).

It is recognized that although a single study is specified above, it may be administratively preferable to submit a separate study protocol for each of the strata mentioned above (*i.e.* native valve endocarditis or prosthetic material endocarditis). This is also acceptable as fulfillment of this request.

Objectives

- To evaluate in the pediatric population the safety and efficacy of intravenous rifampin, followed by oral rifampin, when used in combination with other protocol-specified antimicrobial therapy in the treatment of staphylococcal endocarditis in children. The two groups of children to be studied are (a) children with native valve endocarditis due to methicillin resistant S. aureus, and (b) children with prosthetic material endocarditis due to methicillin resistant S. aureus or coagulase negative staphylococci.
- To describe the pharmacokinetics of intravenous and oral rifampin in pediatric patients with staphylococcal endocarditis.

Study Design

The proposed study will be a randomized, multicenter, active-controlled trial, designed to test superiority of rifampin plus other protocol-specified antimicrobial therapy compared to the ''other protocol specified antimicrobial therapy'' in the absence of rifampin (*i.e.*, the ''control'' antibiotic regimen). Patients to be enrolled will be pediatric patients (ages 1 month to 16 years of age) with native valve endocarditis due to MRSA or prosthetic material endocarditis due to MRSA or coagulase negative staphylococci. The study will evaluate the efficacy of rifampin in combination with other protocol-specified antimicrobial therapy (the experimental group) compared to an identical regimen without rifampin (the control group). The design of the study could specify a different antibiotic regimen to be used in the control group for each stratum, [*i.e.*, the strata of pediatric patients with native valve endocarditis could receive a different protocol-specified treatment regimen than patients with prosthetic material endocarditis (*e.g.* the use of different antimicrobial agents and/or a different treatment duration)]. However, within each stratum, the treatment regimen for the rifampin-containing (experimental) group would be identical to the control regimen except for the addition of rifampin. Rifampin will initially be

administered intravenously, with a switch to oral rifampin at a time specified and justified in the protocol.

Pediatric patients will be stratified at enrollment as having (a) native valve endocarditis due to MRSA or (b) endocarditis in the setting of a prosthetic valve or other prosthetic cardiac material. Each stratum will be analyzed separately, with the study being statistically powered to evaluate the effect of rifampin on outcome for each stratum separately. (As noted earlier, each stratum may be considered as a separate study and two separate protocols may be submitted in fulfillment of this Written Request.)

Treatment regimens selected for the active control arm of each stratum must be justified by the sponsor.

Based on published pharmacokinetic studies, it is expected that rifampin dosing in pediatric patients will be approximately 5 mg/kg intravenous every 12 hours and 10 mg/kg orally every 12 hours. If the study enrolls pediatric patients who may be expected to have different pharmacokinetic characteristics from the patients who were enrolled in earlier published studies (*e.g.*, children of certain other ethnicities outside the United States), then additional pharmacokinetic data may be necessary prior to enrollment of these patients. This additional pharmacokinetic data would be necessary to ascertain the appropriate dose for these subjects that would approximate the same exposure as 5 mg/kg IV every 12 hours and 10 mg/kg PO every 12 hours used in previous studies.

Indications To Be Studied

Rifampin in combination with other protocol-specified antimicrobial therapy will be studied in pediatric patients aged 1 month to 16 years for the treatment of (a) native valve endocarditis due to methicillin resistant S. aureus (MRSA) or (b) endocarditis in the setting of prosthetic cardiac material due to either methicillin-resistant S. aureus (MRSA) or coagulase negative staphylococci.

Pediatric Age Groups in Which Study Will Be Performed

The study will include the following age groups.

(a) 1 month to <2 years.
(b) 2 years to <6 years.
(c) 6 years to <12 years.
(d) 12 to 16 years.

Number of Patients

The study will enroll a sufficient number of patients such that it is powered to detect a statistically significant effect attributable to the addition of rifampin to the active control arm regimen. The study must be powered to test significance for each enrollment stratum independently, *i.e.*, there should be separate statistical testing for subjects with native valve endocarditis and subjects with prosthetic material endocarditis. Efficacy results for the two strata should not be pooled.

Pharmacokinetics Sub-Study

A subgroup of patients across both strata should be studied to characterize the pharmacokinetics of single dose or multiple dose rifampin administration for both the oral and intravenous forms for each age grouping described above. A minimum of 8 pediatric patients should be studied for each age range (approximately 32–40 overall). Patients should be reasonably distributed between the sexes.

Inclusion Criteria

- The protocols must include and justify a reliable diagnostic method (*e.g.* Duke clinical criteria) for enrolling pediatric patients with (a) native valve endocarditis due to MRSA or (b) prosthetic material endocarditis due to either MRSA or coagulase negative staphylococci.
- Microorganisms: Positive blood culture(s) to document infection with methicillin-resistant S. aureus (for native valve endocarditis or prosthetic material endocarditis) or coagulase negative staphylococci (for prosthetic material endocarditis).

Exclusion Criteria

- Alternative etiology for endocarditis (protocol defined)
- Hepatic or renal dysfunction of moderate or greater severity (protocol defined)
- Pediatric patients with a known hypersensitivity to rifampin or any of the protocol-specified antibiotic regimens
- Patients who are pregnant or who are sexually active using oral contraceptives as birth control will be excluded from enrollment
- Anyone with glucose-6-phosphate dehydrogenase (G6PD) deficiency shall be excluded from the study
- Anyone who is taking a drug which adversely interacts with rifampin (protocol defined)

Study Endpoints

- The primary efficacy endpoint must be specified and justified in the protocol(s). The primary efficacy endpoint will include both a clinical and a microbiological component. The following definitions of clinical cure and microbiological eradication are adapted from the 1992 IDSA/FDA guidelines for evaluation of anti-infective drugs for the treatment of IE.
- Clinical cure—''the resolution of all signs and symptoms of disease is observed after a course of therapy.''
- Bacteriological eradication-defined by at least two or more negative blood cultures at one month after completion of therapy. The primary efficacy endpoint will require both clinical cure and bacteriologic eradication in order for the patient to be considered a cure. Deaths should be included as treatment failures within the primary endpoint. Any patient who relapses (defined in the guidelines as ''blood cultures that become negative during treatment and remain so for a specified period post-treatment but subsequently become positive for the original pathogen'') should have their bacteriologic outcome tabulated under bacterial persistence. The study protocol must address disposition and plans for the analysis of subjects who receive surgery during the study.
- Mandatory secondary endpoints will include all-cause mortality, time to last positive blood culture, and relapse-free survival after completion of therapy. Secondary endpoints may also include time to negative blood cultures (*e.g.*, time until blood cultures are negative for at least 3 consecutive days), time to resolution of fever (*e.g.*, being afebrile for at least 48 hours), normalization of laboratory values such as C-reactive protein, erythrocyte sedimentation rate (ESR), and white blood cell count. The study must monitor and report the antimicrobial susceptibilities of all bacterial isolates obtained in this study.
- Pediatric patients with native valve endocarditis will be followed for at least 3 months after completion of therapy for safety and efficacy endpoints. Pediatric patients with prosthetic material endocarditis will be followed for at least 6 months after the completion of therapy for safety and efficacy endpoints.
- Pharmacokinetics substudy: A rifampin plasma concentration versus time profile, using sparse sampling, will be determined for each patient. Characterization of concentration-time profiles, and determination of relevant rifampin PK parameters (to the extent possible), for example, clearance (CL), volume of distribution (Vd), elimination half-life (T 1/2), maximum concentration (Cmax), time to maximum concentration (Tmax), and area under the plasma concentration-time curve (AUC).

Drug Information

Rifampin Dosage Forms

- *Intravenous:* 600 mg Rifampin, sodium formaldehyde sulfoxylate 10mg, and sodium hydroxide to adjust pH.
- *Oral:* 150 mg or 300 mg capsules can be compounded as per FDA-approved package labeling to a concentration of 10mg/ml oral suspension.

Route of Administration. Initially, intravenous in all studies with protocol-specified switch to oral formulation of rifampin based on protocol-specified criteria (*e.g.*, after the patient has stabilized and can tolerate oral administration).

Drug Specific Safety Concerns

Routine safety assessments, such as vitals signs, weight, serum chemistry, and monitoring for adverse events must be collected at baseline and at intervals throughout the study. Monitoring should be appropriate for detecting adverse events, including but not limited to hepatotoxicity, renal toxicity, hemolytic anemia, gastrointestinal effects, and seizures. Subjects should be maintained on protocol-specified monitoring even if the experimental or control regimen is discontinued, *i.e.*, consenting subjects should remain on study regardless of therapeutic course after enrollment. Compliance and drug status (*i.e.*, whether the subject is on or off protocol-specified therapy) must be monitored throughout the study. All efforts should be made to minimize loss to follow-up of study patients.

Statistical Information, Including Power of Study and Statistical Assessment

The study must have a detailed pre-specified statistical analysis plan appropriate to the study design and outcome measures. The study must be adequately powered (at least 80% power) to detect a statistically significant treatment effect on the primary endpoint at a significance level of $p < 0.05$ (two sided test) for each stratum, *i.e.*, (a) native valve endocarditis due to methicillin-resistant S. aureus, and (b) prosthetic material endocarditis due to methicillin resistant S. aureus or coagulase-negative staphylococci. If two separate studies are submitted, each will be properly powered for the primary endpoint. The assumptions for the sample sizes proposed in the protocol should be clearly stated with appropriate references. Interim analyses should also be included, as should the role of a Data Safety and Monitoring Board.

Descriptions of the PK parameters to be obtained must be provided. Demographic and safety data will be tabulated, and a descriptive analysis of safety data will be provided.

Labeling Changes That May Result From These Studies

Appropriate sections of the rifampin product labeling may be altered to incorporate the findings of these studies, including recommended pediatric dosing, treatment of endocarditis, pediatric pharmacokinetics, and safety information in children.

Format of Reports To Be Submitted

Full study reports with analysis, assessment, and interpretation, not previously submitted to the Agency addressing the issues outlined in this request will be submitted. Pharmacokinetic study reports should include analytical method and assay validation, individual drug and/or metabolite concentration-time data and individual pharmacokinetic parameters.

In addition, the reports are to include information on the representation of pediatric patients of ethnic and racial minorities. All pediatric patients enrolled in the study(s) must be categorized using one of the following designations for race: American Indian or Alaska Native, Asian, Black or African American, Native Hawaiian or Other Pacific Islander or White. For ethnicity one of the following designations must be used: Hispanic/Latino or Not Hispanic/Latino.

Time Frame for Submitting Reports of the Studies

Reports of the above studies must be submitted to the Agency on or before September 30, 2007. Please keep in mind that pediatric exclusivity attaches only to existing patent protection or exclusivity that has not expired at the time you submit your reports of the studies in response to this Written Request.

Response to Written Request

As per the Best Pharmaceuticals for Children Act, Section 3, if we do not hear from you within 30 days of the date of this Written Request, we will refer this Written Request to the Director of the NIH. If you agree to the request, then you must indicate when the pediatric studies will be initiated.

Please submit protocols for the above studies to an investigational new drug application (IND) and clearly mark your submission ''PEDIATRIC PROTOCOL SUBMITTED IN RESPONSE TO WRITTEN REQUEST'' in large font, bolded type at the beginning of the cover letter of the submission. Please notify us as soon as possible if you wish to enter into a written agreement by submitting a proposed written agreement. Clearly mark your submission ''PROPOSED WRITTEN AGREEMENT FOR PEDIATRIC STUDIES'' in large font, bolded type at the beginning of the cover letter of the submission.

Reports of the studies should be submitted as a new drug application (NDA) or as a supplement to an approved NDA with the proposed labeling changes you believe would be warranted based on the data derived from these studies. When submitting the reports, please clearly mark your submission ''SUBMISSION OF PEDIATRIC STUDY REPORTS—COMPLETE RESPONSE TO WRITTEN REQUEST'' in large font, bolded type at the beginning of the cover letter of the submission and include a copy of this letter.

If you wish to discuss any amendments to this Written Request, please submit proposed changes and the reasons for the proposed changes to your application. Submissions of proposed changes to this request should be clearly marked ''PROPOSED CHANGES IN WRITTEN REQUEST FOR PEDIATRIC STUDIES'' in large font, bolded type at the beginning of the cover letter of the submission. You will be notified in writing if any changes to this Written Request are agreed to by the Agency.

We hope you will fulfill this pediatric study request. We look forward to working with you on this matter in order to develop additional pediatric information that may produce health benefits in the pediatric population.

If you have any questions, call NAME, Project Manager, at PHONE NUMBER.

[FR Doc. 04–11063 Filed 5–14–04; 8:45 am]

BILLING CODE 4140–01–P

DEPARTMENT OF HOMELAND SECURITY

Coast Guard

[USCG–2004–17768]

Chemical Transportation Advisory Committee

AGENCY: Coast Guard, DHS.

ACTION: Notice of open teleconference meeting.

SUMMARY: This notice announces a teleconference meeting of the Subcommittee of the Chemical Transportation Advisory Committee (CTAC) on the National Fire Protection

Association (NFPA) 472 Standard. The NFPA 472 Subcommittee will meet to discuss the formation of a marine emergency responder chapter in NFPA 472, Professional Competence of Responders to Hazardous Materials Incidents. This meeting will be open to the public.

DATES: The teleconference call will take place on Thursday, June 10, 2004, from 9 a.m. to 11 a.m. EST. Written comments may be submitted on or before June 9, 2004.

ADDRESSES: Members of the public may participate by coming to Room 2100, U.S. Coast Guard Headquarters Building, 2100 Second Street, SW., Washington, DC 20593. We request that members of the public who plan to attend this meeting notify LT Matt Barker at 202 267–1217 so that he may notify building security officials. Written comments should be sent to CDR Robert J. Hennessy, Executive Director, CTAC, Commandant (G–MSO–3), 2100 Second Street, SW., Washington DC 20593–0001 or Fax: 202 267–4570. This notice is available on the Internet at *http://dms.dot.gov.*

FOR FURTHER INFORMATION CONTACT: Commander Robert J. Hennessy, Executive Director of CTAC, or Ms. Sara Ju, Assistant to the Executive Director, telephone 202 267–1217, fax 202 267–4570.

SUPPLEMENTARY INFORMATION: Members of the public may participate by dialing 202 366–3920, Passcode: 5999. Public participation is welcomed; however, the number of teleconference lines is limited and available on a first-come, first-served basis. Notice of this meeting is given under the Federal Advisory Committee Act, 5 U.S.C. App. 2.

Tentative Agenda

(1) Introduction of Subcommittee members and public attendees.

(2) Review of the initiative to incorporate marine specific competencies, for hazardous material incident responders, into the NFPA 472 Standard.

(3) Discussion on draft chapter for future incorporation into the NFPA 472.

(4) Discussion on the formation of Workgroups within the Subcommittee that will be tasked to write specific parts of the draft chapter.

(5) Public comment period.

Public Participation

The Chairman of this NFPA 472 Subcommittee shall conduct the teleconference in a way that will, in his judgment, facilitate the orderly conduct of business. During the teleconference, the Subcommittee welcomes public comment. Members of the public will be heard during the public comment period. The committee will make every effort to hear the views of all interested parties. Please note that the teleconference may close early if all business is finished. Written comments may be submitted on or before the day of the teleconference (see **ADDRESSES**).

Minutes

The teleconference will be recorded, and a summary will be available for public review and copying in the docket approximately 30 days following the teleconference meeting.

Dated: May 7, 2004.

Joseph J. Angelo,

Director of Standards, Marine Safety, Security and Environmental Protection.

[FR Doc. 04–11146 Filed 5–14–04; 8:45 am]

BILLING CODE 4910–15–P

DEPARTMENT OF HOMELAND SECURITY

Coast Guard

[USCG–2004–17767]

Chemical Transportation Advisory Committee

AGENCY: Coast Guard, DHS.

ACTION: Notice of meeting.

SUMMARY: The Subcommittee of the Chemical Transportation Advisory Committee (CTAC) on Hazardous Cargo Transportation Security will meet to discuss the potential addition of acrylonitrile to the Certain Dangerous Cargoes (CDC) definition and to review recent workgroup discussions and outcomes regarding CDC mixtures and the Declaration of Security. This meeting will be open to the public.

DATES: The CTAC Subcommittee on Hazardous Cargo Transportation Security will meet on Tuesday, June 8, 2004, from 8 a.m. to 4 p.m. and Wednesday, June 9, 2004, from 8 a.m. to 4 p.m. These meetings may close early if all business is finished. Written material and requests to make oral presentations should reach the Coast Guard on or before June 4, 2004. Requests to have a copy of your material distributed to each member of the Subcommittee should also reach the Coast Guard on or before June 4, 2004.

ADDRESSES: The Subcommittee on Hazardous Cargo Transportation Security will meet at the Department of Transportation Headquarters, Nassif Building, L'Enfant Plaza, 400 7th Street, SW., Washington, DC, in room 6244. Send written material and requests to make oral presentations to Commander Robert J. Hennessy, Executive Director of CTAC, Commandant (G–MSO–3), U.S. Coast Guard Headquarters, 2100 Second Street, SW., Washington, DC 20593–0001. This notice is available on the Internet at *http://dms.dot.gov.*

FOR FURTHER INFORMATION CONTACT: Commander Robert J. Hennessy, Executive Director of CTAC, telephone (202) 267–1217 or fax (202) 267–4570.

SUPPLEMENTARY INFORMATION: Notice of these meetings is given under the Federal Advisory Committee Act, 5 U.S.C. App. 2 (Pub. L. 92–463, 86 Stat. 770, as amended).

Agenda of Subcommittee Meeting on June 8, 2004

Discuss potential addition of acrylonitrile to the CDC definition.

Agenda of Subcommittee Meeting on June 9, 2004

Review recent workgroup discussions and outcomes regarding CDC mixtures and the Declaration of Security.

Procedural

These meetings are open to the public. Please note that the meetings may close early if all business is finished. At the discretion of the Chair, members of the public may make oral presentations during the meetings. If you would like to make an oral presentation at a meeting, please notify the Executive Director and submit written material. If you would like a copy of your material distributed to each member of the Committee in advance of a meeting, please submit 25 copies to the Executive Director (*see* **ADDRESSES** and **DATES**).

Information on Services for Individuals With Disabilities

For information on facilities or services for individuals with disabilities, or to request special assistance at the meeting, telephone the Executive Director as soon as possible.

Dated: May 10, 2004.

Joseph J. Angelo,

Director of Standards, Marine Safety, Security and Environmental Protection.

[FR Doc. 04–11147 Filed 5–14–04; 8:45 am]

BILLING CODE 4910–15–P

DEPARTMENT OF HOMELAND SECURITY

Federal Emergency Management Agency

[FEMA–1513–DR]

Illinois; Amendment No.2 to Notice of a Major Disaster Declaration

AGENCY: Federal Emergency Management Agency, Emergency Preparedness and Response Directorate, Department of Homeland Security.

ACTION: Notice.

SUMMARY: This notice amends the notice of a major disaster declaration for the State of Illinois (FEMA–1513–DR), dated April 23, 2004, and related determinations.

DATES: *Effective Date:* May 7, 2004.

FOR FURTHER INFORMATION CONTACT: Magda Ruiz, Recovery Division, Federal Emergency Management Agency, Washington, DC 20472, (202) 646–2705.

SUPPLEMENTARY INFORMATION: The notice of a major disaster declaration for the State of Illinois is hereby amended to include Public Assistance for the following areas among those areas determined to have been adversely affected by the catastrophe declared a major disaster by the President in his declaration of April 23, 2004:

LaSalle and Putnam Counties for Public Assistance (already designated for Individual Assistance).

(The following Catalog of Federal Domestic Assistance Numbers (CFDA) are to be used for reporting and drawing funds: 97.030, Community Disaster Loans; 97.031, Cora Brown Fund Program; 97.032, Crisis Counseling; 97.033, Disaster Legal Services Program; 97.034, Disaster Unemployment Assistance (DUA); 97.046, Fire Management Assistance; 97.048, Individual and Household Housing; 97.049, Individual and Household Disaster Housing Operations; 97.050 Individual and Household Program-Other Needs, 97.036, Public Assistance Grants; 97.039, Hazard Mitigation Grant Program)

Michael D. Brown,

Under Secretary, Emergency Preparedness and Response, Department of Homeland Security.

[FR Doc. 04–11080 Filed 5–14–04; 8:45 am]

BILLING CODE 9110–10–P

DEPARTMENT OF HOMELAND SECURITY

Federal Emergency Management Agency

[FEMA–1515–DR]

North Dakota; Major Disaster and Related Determinations

AGENCY: Federal Emergency Management Agency, Emergency Preparedness and Response Directorate, Department of Homeland Security.

ACTION: Notice.

SUMMARY: This is a notice of the Presidential declaration of a major disaster for the State of North Dakota (FEMA–1515–DR), dated May 5, 2004, and related determinations.

DATES: *Effective Date:* May 5, 2004.

FOR FURTHER INFORMATION CONTACT: Magda Ruiz, Recovery Division, Federal Emergency Management Agency, Washington, DC 20472, (202) 646–2705.

SUPPLEMENTARY INFORMATION: Notice is hereby given that, in a letter dated May 5, 2004, the President declared a major disaster under the authority of the Robert T. Stafford Disaster Relief and Emergency Assistance Act, 42 U.S.C. 5121–5206 (the Stafford Act), as follows:

I have determined that the damage in certain areas of the State of North Dakota, resulting from severe storms, flooding, and ground saturation beginning on March 26, 2004, and continuing, is of sufficient severity and magnitude to warrant a major disaster declaration under the Robert T. Stafford Disaster Relief and Emergency Assistance Act, 42 U.S.C. 5121–5206 (the Stafford Act). I, therefore, declare that such a major disaster exists in the State of North Dakota.

In order to provide Federal assistance, you are hereby authorized to allocate from funds available for these purposes, such amounts as you find necessary for Federal disaster assistance and administrative expenses.

You are authorized to provide Public Assistance and Hazard Mitigation in the designated areas, and any other forms of assistance under the Stafford Act you may deem appropriate. Consistent with the requirement that Federal assistance be supplemental, any Federal funds provided under the Stafford Act for Public Assistance and Hazard Mitigation will be limited to 75 percent of the total eligible costs. If Other Needs Assistance under Section 408 of the Stafford Act is later requested and warranted, Federal funding under that program will also be limited to 75 percent of the total eligible costs.

The North Dakota Division of Emergency Management (DEM) will manage the Public Assistance operation, including project eligibility reviews, process control, and resource allocation. The Federal Emergency Management Agency (FEMA) will retain obligation authority, the final approval of environmental and historic preservation reviews, and will assist the North Dakota DEM to the extent that such assistance is necessary and requested by DEM.

Further, you are authorized to make changes to this declaration to the extent allowable under the Stafford Act.

The Federal Emergency Management Agency (FEMA) hereby gives notice that pursuant to the authority vested in the Under Secretary for Emergency Preparedness and Response, Department of Homeland Security, under Executive Order 12148, as amended, Anthony Russell, of FEMA is appointed to act as the Federal Coordinating Officer for this declared disaster.

I do hereby determine the following areas of the State of North Dakota to have been affected adversely by this declared major disaster:

Benson, Cavalier, Grand Forks, Griggs, Nelson, Pembina, Ramsey, Steele, Traill, and Walsh Counties, and the Spirit Lake Indian Reservation for Public Assistance.

Benson, Cavalier, Grand Forks, Griggs, Nelson, Pembina, Ramsey, Steele, Traill, and Walsh Counties, and the Spirit Lake Indian Reservation are eligible to apply for assistance under the Hazard Mitigation Grant Program.

(The following Catalog of Federal Domestic Assistance Numbers (CFDA) are to be used for reporting and drawing funds: 97.030, Community Disaster Loans; 97.031, Cora Brown Fund Program; 97.032, Crisis Counseling; 97.033, Disaster Legal Services Program; 97.034, Disaster Unemployment Assistance (DUA); 97.046, Fire Management Assistance; 97.048, Individual and Household Housing; 97.049, Individual and Household Disaster Housing Operations; 97.050 Individual and Household Program—Other Needs, 97.036, Public Assistance Grants; 97.039, Hazard Mitigation Grant Program)

Michael D. Brown,

Under Secretary, Emergency Preparedness and Response, Department of Homeland Security.

[FR Doc. 04–11081 Filed 5–14–04; 8:45 am]

BILLING CODE 9110–10–P

DEPARTMENT OF THE INTERIOR

Fish and Wildlife Service

Receipt of Applications for Permit

AGENCY: Fish and Wildlife Service, Interior.

ACTION: Notice of receipt of applications for permit.

SUMMARY: The public is invited to comment on the following applications to conduct certain activities with endangered species and/or marine mammals.

DATES: Written data, comments or requests must be received by June 16, 2004.

ADDRESSES: Documents and other information submitted with these applications are available for review, subject to the requirements of the Privacy Act and Freedom of Information Act, by any party who submits a written request for a copy of such documents within 30 days of the date of publication of this notice to: U.S. Fish and Wildlife Service, Division of Management Authority, 4401 North Fairfax Drive, Room 700, Arlington, Virginia 22203; fax (703) 358–2281.

FOR FURTHER INFORMATION CONTACT: Division of Management Authority, telephone (703) 358–2104.

SUPPLEMENTARY INFORMATION:

Endangered Species

The public is invited to comment on the following application(s) for a permit to conduct certain activities with endangered species. This notice is provided pursuant to section 10(c) of the Endangered Species Act of 1973, *as amended* (16 U.S.C. 1531, *et seq.*). Written data, comments, or requests for copies of these complete applications should be submitted to the Director (**ADDRESSES** above).

Clifford J. Johnson, Albuquerque, NM, PRT–085273

The applicant requests a permit to import the sport-hunted trophy of one male bontebok (*Damaliscus pygargus pygargus*) culled from a captive herd maintained under the management program of the Republic of South Africa, for the purpose of enhancement of the survival of the species.

Jon S. Katada, Hilo, HI, PRT–086250

The applicant requests a permit to import the sport-hunted trophy of one male bontebok (*Damaliscus pygargus pygargus*) culled from a captive herd maintained under the management program of the Republic of South Africa, for the purpose of enhancement of the survival of the species.

Roy J. Durbin, Jr., Denver, CO, PRT–086253

The applicant requests a permit to import the sport-hunted trophy of one male bontebok (*Damaliscus pygargus pygargus*) culled from a captive herd maintained under the management program of the Republic of South Africa, for the purpose of enhancement of the survival of the species.

David J. Steger, Riverton, WY, PRT–085820

The applicant requests a permit to import the sport-hunted trophy of one male bontebok (*Damaliscus pygargus pygargus*) culled from a captive herd maintained under the management program of the Republic of South Africa, for the purpose of enhancement of the survival of the species.

Endangered Marine Mammals and Marine Mammals

The public is invited to comment on the following application(s) for a permit to conduct certain activities with endangered marine mammals and/or marine mammals. The application(s) was/were submitted to satisfy requirements of the Endangered Species Act of 1973, *as amended* (16 U.S.C. 1531, *et seq.*) and/or the Marine Mammal Protection Act of 1972, *as amended* (16 U.S.C. 1361 *et seq.*), and the regulations governing endangered species (50 CFR part 17) and/or marine mammals (50 CFR part 18). Written data, comments, or requests for copies of the complete applications or requests for a public hearing on these applications should be submitted to the Director (address above). Anyone requesting a hearing should give specific reasons why a hearing would be appropriate. The holding of such a hearing is at the discretion of the Director.

Applicant: Jay T. Nieuwenhuis, Wausau, WI, PRT–085777

The applicant requests a permit to import a polar bear (*Ursus maritimus*) sport hunted from the Southern Beaufort Sea polar bear population in Canada for personal use.

Applicant: Tom J. Nieuwenhuis, Wausau, WI, PRT–085780

The applicant requests a permit to import a polar bear (*Ursus maritimus*) sport hunted from the Southern Beaufort Sea polar bear population in Canada for personal use.

Applicant: Jorge M. Rodriguez, Pembroke Pines, FL, PRT–086230

The applicant requests a permit to import a polar bear (*Ursus maritimus*) sport hunted from the Lancaster Sound polar bear population in Canada for personal use.

Applicant: Troy J. Perry, Malta, MT, PRT–086231

The applicant requests a permit to import a polar bear (*Ursus maritimus*) sport hunted from the Southern Beaufort Sea polar bear population in Canada for personal use.

Dated: April 23, 2004.

Monica Farris,

Senior Permit Biologist, Branch of Permits, Division of Management Authority.

[FR Doc. 04–11082 Filed 5–14–04; 8:45 am]

BILLING CODE 4310–55–P

DEPARTMENT OF THE INTERIOR

Fish and Wildlife Service

Receipt of Applications for Permit

AGENCY: Fish and Wildlife Service, Interior.

ACTION: Notice of receipt of applications for permit.

SUMMARY: The public is invited to comment on the following applications to conduct certain activities with endangered species and/or marine mammals.

DATES: Written data, comments or requests must be received by June 16, 2004.

ADDRESSES: Documents and other information submitted with these applications are available for review, subject to the requirements of the Privacy Act and Freedom of Information Act, by any party who submits a written request for a copy of such documents within 30 days of the date of publication of this notice to: U.S. Fish and Wildlife Service, Division of Management Authority, 4401 North Fairfax Drive, Room 700, Arlington, Virginia 22203; fax (703) 358–2281.

FOR FURTHER INFORMATION CONTACT: Division of Management Authority, telephone (703) 358–2104.

SUPPLEMENTARY INFORMATION:

Endangered Species

The public is invited to comment on the following applications for a permit to conduct certain activities with endangered species. This notice is provided pursuant to section 10(c) of the Endangered Species Act of 1973, *as amended* (16 U.S.C. 1531, *et seq.*). Written data, comments, or requests for copies of these complete applications should be submitted to the Director (**ADDRESSES** above).

Applicant: Peabody Museum of Natural History, New Haven, CT, PRT–084544

The applicant requests a permit to import biological samples from lesser mouse lemur (*Microcebus murinus*) collected in the wild in Madagascar, for scientific research. This notification covers activities to be conducted by the applicant over a five year period.

Applicant: William H. Zovickian, Dacula, GA, PRT–084430

The applicant requests a permit to import one angulated tortoise (*Geochelone yniphora*) from the Singapore Zoological Gardens, Singapore, for the purpose of enhancement of the species through captive propagation and scientific research.

Applicant: Los Angeles Zoo, Los Angeles, CA, PRT–079682

The applicant requests a permit to import biological samples from peninsular pronghorn (*Antilocapra americana peninsularis*) from both captive-born and wild caught specimens in Mexico, for scientific research. This notification covers activities to be conducted by the applicant over a five year period.

Applicant: University of Wisconsin-Madison, Psychology Department, Madison, WI, PRT–082542

The applicant requests a permit to export five captive-born cotton-top tamarin (*Saguinus oedipus*) to the St. Maarten Zoological and Botanical Gardens, St. Maarten, Netherlands Antilles, for the purpose of enhancement of the species through conservation education.

Marine Mammals

The public is invited to comment on the following applications for a permit to conduct certain activities with marine mammals. The applications were submitted to satisfy requirements of the Marine Mammal Protection Act of 1972, *as amended* (16 U.S.C. 1361 *et seq.*), and the regulations governing marine mammals (50 CFR part 18). Written data, comments, or requests for copies of the complete applications or requests for a public hearing on these applications should be submitted to the Director (address above). Anyone requesting a hearing should give specific reasons why a hearing would be appropriate. The holding of such a hearing is at the discretion of the Director.

Applicant: Steven W. Stock, Oneida, WI, PRT–086456

The applicant requests a permit to import a polar bear (*Ursus maritimus*) sport hunted from the Southern Beaufort Sea polar bear population in Canada for personal use.

Applicant: Douglas R. Scandrol, Pittsburgh, PA, PRT–086589

The applicant requests a permit to import a polar bear (*Ursus maritimus*) sport hunted from the Viscount Melville Sound polar bear population in Canada for personal use.

Applicant: Leon A. Naccarato, Priest River, ID, PRT–086824

The applicant requests a permit to import a polar bear (*Ursus maritimus*) sport hunted from the Lancaster Sound polar bear population in Canada for personal use.

Dated: April 30, 2004.

Michael S. Moore,

Senior Permit Biologist, Branch of Permits, Division of Management Authority.

[FR Doc. 04–11084 Filed 5–14–04; 8:45 am]

BILLING CODE 4310–55–P

DEPARTMENT OF THE INTERIOR

Fish and Wildlife Service

Issuance of Permits

AGENCY: Fish and Wildlife Service, Interior.

ACTION: Notice of decision and availability of decision documents.

SUMMARY: Between July 18, 2003 and April 20, 2004, the Pacific Region of the Fish and Wildlife Service (we, the Service) issued 16 permits in response to applications for incidental take of threatened and endangered species, pursuant to sections 10(a)(1)(B) and 10(a)(1)(A) of the Endangered Species Act of 1973, as amended (Act). Copies of the permits and associated decision documents are available upon request.

ADDRESSES: Documents are available from the U.S. Fish and Wildlife Service, 911 NE. 11th Avenue, Portland, Oregon 97232; facsimile (503) 231–6243. Charges for copying, shipping and handling may apply.

FOR FURTHER INFORMATION CONTACT: If you would like copies of any of the documents cited in this notice, please contact Shelly McKeever, Administrative Assistant, at telephone (503) 231–6241.

SUPPLEMENTARY INFORMATION:

Section 9 of the Act and Federal regulations prohibit the take of wildlife species listed as endangered or threatened. The term ''take'' means to harass, harm, pursue, hunt, shoot, wound, kill, trap, capture, or collect listed wildlife, or to attempt to engage in any such conduct. The Service may, under limited circumstances, issue permits to authorize take that is incidental to, and not the purpose of, carrying out an otherwise lawful activity. Regulations governing permits for threatened and endangered species are found in 50 CFR 17.32 and 17.22.

Although not required by law or regulation, it is Service policy to notify the public of its permit application decisions. Between July 18, 2003 and April 20, 2004, we issued the following permits within the Pacific Region of the Service for incidental take of threatened and endangered species subject to certain conditions set forth therein, pursuant to section 10(a)(1)(B) and section 10(a)(1)(A) of the Act. We issued each permit after determining that: (1) The permit application was submitted in good faith; (2) all permit issuance criteria were met, including the requirement that granting the permit will not jeopardize the continued existence of listed species; and (3) the permit was consistent with the purposes and policy set forth in the Act and applicable regulations, including a thorough review of the environmental effects of the action and alternatives pursuant to the National Environmental Policy Act of 1969.

Approved plan or agreement	Permit No.	Issuance date
Habitat Conservation Plans:		
Harley John Reservoir	TE075628–0	09/04/03
Shimboff	TE079118–0	11/26/03
Newport Estates	TE079353–0	12/23/03
Hyundai Motor America Test Track (2 permits)	TE080999–0 TE082034–0	01/21/04
Multiple Species Conservation Program, partial permit transfer from County of San Diego to City of Escondido	TE083688–0	03/01/04
Terra Springs	TE065890–0	03/03/04
Daybreak Mine, Storedahl & Sons, Inc.	TE064055–0	04/16/04
Safe Harbor Agreements:		
Urban Wildlands	TE061433–0	10/23/03

Approved plan or agreement	Permit No.	Issuance date
White River Spinedace at Indian Spring	TE079119–0	01/08/04
Tagshinney Tree Farm	TE078319–0	02/19/04
Candidate Conservation Agreements with Assurances:		
Tagshinney Tree Farm	TE078318–0	02/19/04
3-Mile Canyon Farms (4 permits)	TE034590–0	03/01/04
	TE082920–0	.....
	TE082922–0	.....
	TE082923–0	.....

Copies of these permits, the accompanying Habitat Conservation Plan, Safe Harbor Agreement or Candidate Conservation Agreement with Assurances, and associated documents are available upon request. Decision documents for each permit include a Findings and Recommendation; a Biological Opinion; and either a Record of Decision, Finding of No Significant Impact, or an Environmental Action Statement. Associated documents may also include an Implementing Agreement, Environmental Impact Statement, or Environmental Assessment, as applicable.

David J. Wesley,

Deputy Regional Director, Portland, Oregon.

[FR Doc. 04–11036 Filed 5–14–04; 8:45 am]

BILLING CODE 4310–55–P

DEPARTMENT OF THE INTERIOR

Fish and Wildlife Service

Endangered Species Recovery Permit Applications

AGENCY: Fish and Wildlife Service, Interior.

ACTION: Notice of receipt of permit applications.

SUMMARY: The following applicants have applied for a scientific research permit to conduct certain activities with endangered species pursuant to section 10(a)(1)(A) of the Endangered Species Act (16 USC 1531 *et seq.*). The U.S. Fish and Wildlife Service (''we'') solicits review and comment from local, State, and Federal agencies, and the public on the following permit requests.

DATES: Comments on these permit applications must be received on or before June 16, 2004.

ADDRESSES: Written data or comments should be submitted to the U.S. Fish and Wildlife Service, Chief, Endangered Species, Ecological Services, 911 NE. 11th Avenue, Portland, Oregon 97232–4181 (fax: 503–231–6243). Please refer to the respective permit number for each application when submitting comments. All comments received, including names and addresses, will become part of the official administrative record and may be made available to the public.

FOR FURTHER INFORMATION CONTACT: Documents and other information submitted with these applications are available for review, subject to the requirements of the Privacy Act and Freedom of Information Act, by any party who submits a written request for a copy of such documents within 30 days of the date of publication of this notice to the address above (telephone: 503–231–2063). Please refer to the respective permit number for each application when requesting copies of documents.

SUPPLEMENTARY INFORMATION:

Permit No. TE–017352

Applicant: The Commonwealth of the Northern Mariana Islands, Saipan, Mariana Islands. The permittee requests an amendment to take (collect blood and mark) the Mariana swiftlet (*Aerodramus bartschi*) in conjunction with scientific research in the Mariana Islands for the purpose of enhancing its survival.

We solicit public review and comment on each of these recovery permit applications.

Dated: April 30, 2004.

David J. Wesley,

Acting Regional Director, Region 1, Fish and Wildlife Service.

[FR Doc. 04–11037 Filed 5–14–04; 8:45 am]

BILLING CODE 4310–55–M

DEPARTMENT OF THE INTERIOR

Fish and Wildlife Service

Endangered Species Recovery Permit Applications

AGENCY: Fish and Wildlife Service, Interior.

ACTION: Notice of receipt of permit applications.

SUMMARY: The following applicants have applied for a scientific research permit to conduct certain activities with endangered species pursuant to section 10(a)(1)(A) of the Endangered Species Act (16 U.S.C. 1531 *et seq.*). The U.S. Fish and Wildlife Service (''we'') solicits review and comment from local, State, and Federal agencies, and the public on the following permit requests.

DATES: Comments on these permit applications must be received on or before June 16, 2004.

ADDRESSES: Written data or comments should be submitted to the U.S. Fish and Wildlife Service, Chief, Endangered Species, Ecological Services, 911 NE. 11th Avenue, Portland, Oregon 97232–4181 (fax: 503–231–6243). Please refer to the respective permit number for each application when submitting comments. All comments received, including names and addresses, will become part of the official administrative record and may be made available to the public.

FOR FURTHER INFORMATION CONTACT: Documents and other information submitted with these applications are available for review, subject to the requirements of the Privacy Act and Freedom of Information Act, by any party who submits a written request for a copy of such documents within 30 days of the date of publication of this notice to the address above (telephone: 503–231–2063). Please refer to the respective permit number for each application when requesting copies of documents.

SUPPLEMENTARY INFORMATION:

Permit No. TE–781220

Applicant: William Wagner, Mountain Center, California.

The permittee requests an amendment to take (survey by pursuit) the Quino checkerspot butterfly (*Euphydryas editha quino*) in conjunction with surveys throughout the range of the species in California for the purpose of enhancing its survival.

Permit No. TE–084254

Applicant: Ellen Schafhauser, Ridgecrest, California.

The applicant requests a permit to take (survey by pursuit) the Delhi Sands flower-loving fly (*Rhaphiomidas terminatus abdominalis*) in conjunction with surveys throughout the range of the species in California for the purpose of enhancing its survival.

Permit No. TE–084254

Applicant: David Moskovitz, Yorba Linda, California.

The applicant requests a permit to take (harass by survey) the Riverside fairy shrimp (*Streptocephalus wootoni*) and the San Diego fairy shrimp (*Branchinecta sandiegonensis*) in conjunction with surveys in Santa Barbara, Ventura, Los Angeles, Orange, San Diego, San Bernardino, Riverside, and Imperial Counties, California, for the purpose of enhancing their survival.

Permit No. TE–045994

Applicant: U.S. Geological Survey, San Diego, California.

The permittee requests an amendment to take (harass by survey, capture, ear-tag, and fur-clip) the Stephens' kangaroo rat (*Dipodomys stephensi*) in conjunction with distribution and abundance research in San Diego County, California, for the purpose of enhancing its survival.

Permit No. TE–085024

Applicant: Anne M. Condon, Ridgefield, California.

The applicant requests a permit to take (harass by survey) the southwestern willow flycatcher (*Empidonax traillii extimus*) in conjunction with surveys throughout the range of the species in California and Arizona for the purpose of enhancing its survival.

Permit No. TE–085026

Applicant: Jeff Steinman, San Francisco, California.

The applicant requests a permit to take (harass by survey) the southwestern willow flycatcher (*Empidonax traillii extimus*) in conjunction with surveys in San Diego, Los Angeles, Imperial, Orange, Riverside, Inyo, Kern, San Bernardino, San Luis Obispo, Ventura, and Santa Barbara Counties, California, for the purpose of enhancing its survival.

Permit No. TE–085879

Applicant: Lisa Roberts, Ventura, California.

The applicant requests a permit to take (harass by survey) the southwestern willow flycatcher (*Empidonax traillii extimus*) in conjunction with surveys in Kern County, California, for the purpose of enhancing its survival.

Permit No. TE–039321

Applicant: Kylie Fischer, Escondido, California.

The permittee requests an amendment to take (monitor nests) the least Bell's vireo (*Vireo pusillus bellii*) in conjunction with demographic studies throughout the range of the species in California for the purpose of enhancing its survival.

Permit No. TE–085880

Applicant: Ronald Francis, Moopark, California.

The applicant requests a permit to take (monitor nests) the least Bell's vireo (*Vireo pusillus bellii*) in conjunction with demographic studies in Ventura, Los Angeles, Riverside, San Bernardino, and San Diego Counties, California, for the purpose of enhancing its survival.

Permit No. TE–086267

Applicant: The National Park Service, Ventura, California.

The applicant requests a permit to take (harass by survey; capture; handle; measure; sex; insert passive integrated transponder tags; radio-collar; vaccinate; collect blood and fecal samples, parasites, and hair; captive propagate; administer veterinary medical treatments; release to the wild; and transport) the San Miguel Island fox (*Urocyon littoralis littoralis*), the Santa Rosa Island fox (*Urocyon littoralis santarosae*), and the Santa Cruz Island fox (*Urocyon littoralis santacruzae*) in conjunction with predator avoidance behavior studies and other scientific research on San Miguel, Santa Rosa, and Santa Cruz Islands, California, for the purpose of enhancing their survival.

Permit No. TE–744878

Applicant: The Institute for Wildlife Studies, Arcata, California.

The permittee requests an amendment to take (harass by survey, capture, handle, measure, sex, insert passive integrated transponder tags, radio-collar, vaccinate, administer veterinary medical treatments, captive propagate, collect blood and fecal samples, transport, and release) the Santa Catalina Island fox (*Urocyon littoralis catalinae*) and Santa Cruz Island fox (*Urocyon littoralis santacruzae*) in conjunction with scientific research on Santa Catalina and Santa Cruz Islands, California, for the purpose of enhancing their survival.

Permit No. TE–085025

Applicant: Environmental Science Associates, San Francisco, California.

The applicant requests a permit to take (harass by survey) the Conservancy fairy shrimp (*Branchinecta conservatio*), the longhorn fairy shrimp (*Branchinecta longiantenna*), the Riverside fairy shrimp (*Streptocephalus wootoni*), the San Diego fairy shrimp (*Branchinecta sandiegonensis*), and the vernal pool tadpole shrimp (*Lepidurus packardi*), in conjunction with surveys throughout the range of each species in California and Oregon for the purpose of enhancing their survival.

Permit No. TE–835365

Applicant: Department of Water Resources, Sacramento, California.

The permittee requests an amendment to take (capture and temporarily hold in captivity) the salt marsh harvest mouse (*Reithrodontomys raviventris*) in conjunction with husbandry activities throughout range of the species for the purpose of enhancing its survival.

Permit No. TE–045937

Applicant: Alan Hastings, Davis, California.

The permittee requests an amendment to take (harass) the California clapper rail (*Rallus longirostris obsoletus*) within the San Francisco estuary in Alameda and San Mateo Counties, California, in conjunction with ecological studies for the purpose of enhancing its survival.

Permit No. TE–826200

Applicant: California Department of Parks and Recreation, Half Moon Bay, California.

The permittee requests an amendment to take (capture, handle, mark, temporarily hold in captivity, and release) the San Francisco garter snake (*Thamnophis sirtalis tetrataenia*) in conjunction with ecological research in San Mateo and Santa Cruz Counties, California, for the purpose of enhancing its survival.

Permit No. TE–086595

Applicant: Joshua Phillips, Berkeley, California.

The applicant requests a permit to take (harass by survey) the Conservancy fairy shrimp (*Branchinecta conservatio*), the longhorn fairy shrimp (*Branchinecta longiantenna*), the Riverside fairy shrimp (*Streptocephalus wootoni*), the San Diego fairy shrimp (*Branchinecta sandiegonensis*), and the vernal pool tadpole shrimp (*Lepidurus packardi*) in conjunction with surveys throughout the range of each species in California for the purpose of enhancing their survival.

Permit No. TE–826200

Applicant: California Department of Parks and Recreation, Pescadero, California.

The applicant requests a permit to take (capture, mark, and temporarily hold) the San Francisco garter snake (*Thamnophis sirtalis tetrataenia*) in conjunction with habitat enhancement activities in San Mateo and Santa Cruz Counties, California, for the purpose of enhancing its survival.

We solicit public review and comment on each of these recovery permit applications.

Dated: April 29, 2004.

Lawrence R. Gamble,

Acting Manager, California/Nevada Operations Office, Region 1, U.S. Fish and Wildlife Service.

[FR Doc. 04–11038 Filed 5–14–04; 8:45 am]

BILLING CODE 4310–55–P

DEPARTMENT OF THE INTERIOR

Fish and Wildlife Service

Receipt of Applications for Endangered Species Permits

AGENCY: Fish and Wildlife Service, Interior.

ACTION: Notice of receipt of applications for permits.

SUMMARY: The public is invited to comment on the following applications to conduct certain activities with endangered species. We provide this notice pursuant to section 10(c) of the Endangered Species Act of 1973, as amended (16 U.S.C. 1531 *et seq.*).

DATES: We must receive written data or comments on these applications at the address given below, by June 16, 2004.

ADDRESSES: Documents and other information submitted with these applications are available for review, subject to the requirements of the Privacy Act and Freedom of Information Act, by any party who submits a written request for a copy of such documents to the following office within 30 days of the date of publication of this notice: U.S. Fish and Wildlife Service, 1875 Century Boulevard, Suite 200, Atlanta, Georgia 30345 (Attn: Victoria Davis, Permit Biologist).

FOR FURTHER INFORMATION CONTACT: Victoria Davis, telephone (404) 679–4176; facsimile (404) 679–7081.

SUPPLEMENTARY INFORMATION: The public is invited to comment on the following applications for permits to conduct certain activities with endangered species. If you wish to comment, you may submit comments by any one of the following methods. You may mail comments to the Service's Regional Office (*see* **ADDRESSES** section) or via electronic mail (e-mail) to *''victoria_davis@fws.gov''*. Please submit electronic comments as an ASCII file avoiding the use of special characters and any form of encryption. Please also include your name and return address in your e-mail message. If you do not receive a confirmation from the Service that we have received your e-mail message, contact us directly at the telephone number listed above (*see* **FOR FURTHER INFORMATION CONTACT** section). Finally, you may hand deliver comments to the Service office listed above (*see* **ADDRESSES** section).

Our practice is to make comments, including names and home addresses of respondents, available for public review during regular business hours. Individual respondents may request that we withhold their home address from the administrative record. We will honor such requests to the extent allowable by law. There may also be other circumstances in which we would withhold from the administrative record a respondent's identity, as allowable by law. If you wish us to withhold your name and address, you must state this prominently at the beginning of your comments. However, we will not consider anonymous comments. We will make all submissions from organizations or businesses, and from individuals identifying themselves as representatives or officials of organizations or businesses, available for public inspection in their entirety.

Applicant: Florida Power & Light Company, Florida Power & Light Turkey Point Power Plant, James Robert Lindsay, Juno Beach, Florida, TE084921–0.

The applicant requests authorization to take (capture, identify, examine, measure, weigh, permanently mark, tag, sex, manipulate water temperatures, use spotlights, transport, translocate) the American Crocodile while conducting population and habitat monitoring and management. The proposed activities would take place on the shore of Biscayne Bay, Miami-Dade County, Florida.

Applicant: Brian A. Estes, GeoSyntec Consultants, Inc., Atlanta, Georgia, TE087127–0.

The applicant requests authorization to take (capture, identify, photograph, release) the following species: Blue shiner (*Cyprinella caerulea*), Etowah darter (*Etheostoma etowahae*), Cherokee darter (*Etheostoma scotti*), amber darter (*Percina antesella*), goldline darter (*Percina aurolineata*), Conasauga logperch (*Percina jenkinsi*), snail darter (*Percina tanasi*), and eastern indigo snake (*Drymarchon corais couperi*). The activities would take place while conducting presence and absence studies. The proposed activities would occur in the State of Georgia.

Applicant: Jeanette Wyneken, Florida Atlantic University, Boca Raton, Florida TE087169–0.

The applicant requests authorization to take (capture and sacrifice) six leatherback sea turtles (*Dermochelys coriacea*) while conducting studies of retinal physiology (spectral sensitivity to light). The activities would take place at Florida Atlantic University, Boca Raton, Palm Beach County, Florida.

Applicant: Sandhills Ecological Institute, Kerry B. Sadler, Southern Pines, North Carolina TE087191–0.

The applicant requests authorization to take (capture, band, release, and monitor nests) of the red-cockaded woodpecker (*Picoides borealis*) while conducting population monitoring and management. The proposed activities would take place in the North Carolina Sandhills, including Moore, Hoke, Cumberland, Richmond, and Scotland Counties, North Carolina.

Applicant: Goethe State Forest, Florida Division of Forestry, Elizabeth G. Zimmerman, TE087194–0.

The applicant requests authorization to take (harass, capture, band, translocate, install artificial cavity inserts, drill starts) red-cockaded woodpeckers (*Picoides borealis*) while conducting population monitoring and management. The proposed activities would take place on Goethe State Forest, Levy County, Florida.

Applicant: James Edwin Moyers, St. Joe Timberland Company, Panama City, Florida, TE087199–0.

The applicant requests authorization to take (capture, identify, exam, measure, clip toe, and release) the Choctawhatchee beach mouse (*Peromyscus polionotus allophres*) and St. Andrew beach mouse (*Peromyscus polionotus peninsularis*) while conducting live-trapping to assess population presence/absence and population status. The proposed activities would occur in Walton, Bay, and Gulf Counties, Florida.

Dated: May 5, 2004.

Cynthia K. Dohner,

Acting Regional Director.

[FR Doc. 04–11077 Filed 5–14–04; 8:45 am]

BILLING CODE 4310–55–P

DEPARTMENT OF THE INTERIOR

Fish and Wildlife Service

Lehua Island Ecosystem Restoration Project; Joint Federal and State of Hawaii Environmental Document

AGENCY: Fish and Wildlife Service, Interior.

ACTION: Notice of intent.

SUMMARY: Pursuant to the National Environmental Policy Act, this notice advises the public that the U.S. Fish and Wildlife Service (Service) and the Hawaii Department of Land and Natural

Resources (DLNR) intend to gather information necessary to prepare a joint Federal/State environmental document (environmental assessment or environmental impact statement) for the proposed Lehua Island Ecosystem Restoration Project. The United States Coast Guard, the owner of Lehua Island, intends to become a cooperating agency with us, for the purposes of preparing the environmental document. This document will address the proposal of eradicating non-native rodents and possibly non-native rabbits from Lehua as a means of restoring native seabirds, insects and coastal plants, some of which are threatened with extinction. In addition, the Service and the DLNR propose to implement preventative actions to keep non-native mammals from re-establishing on Lehua, and respond to any such re-introductions. The proposed project would take place on the island of Lehua, Kauai County, Hawaii and would be managed by the Service in cooperation with the DLNR.

The Service is furnishing this notice in order to: (1) Advise other Federal and State agencies, affected tribes, and the public of our intentions; (2) announce the initiation of a 40-day public scoping period; and (3) to obtain suggestions and information on the scope of issues to be included in the environmental document.

DATES: Written comments from all interested parties must be postmarked by 40 days from the date of publication. A public meeting is scheduled to be held in Lihue, Kauai on Wednesday June 9, 2004, at the Lihue Neighborhood Center from 7–9 p.m.

ADDRESSES: Please address comments and requests to be added to the mailing list to Chris Swenson, Project Biologist, U.S. Fish and Wildlife Service, 300 Ala Moana Boulevard, Room 3–122, Honolulu, Hawaii 96850, facsimile: (808) 792–9580.

FOR FURTHER INFORMATION CONTACT: Project Biologists Chris Swenson or Katie Swift at the above address or telephone: (808) 792–9400.

SUPPLEMENTARY INFORMATION: Lehua Island, located approximately 31 kilometers west of Kauai, Hawaii, is known for its beauty and biological diversity. Seventeen species of seabirds have been recorded from Lehua, including nesting Laysan and Black-Footed Albatross, and Newell's Shearwaters, a species listed as threatened under the Endangered Species Act of 1973, as amended. Lehua, a designated State seabird sanctuary, is also home to several species of native coastal plants and insects. However, non-native rats are also present on the island. Rats impact seabirds through predation and are known to have eliminated many seabird species from islands around the world. They also feed on native plants and insects and can suppress or eliminate many of these species as well. In addition, non-native rabbits were introduced to Lehua during or before the 1930s. On many islands, rabbits have decimated the vegetation and even competed with seabirds for use of burrows. After conducting biological surveys of Lehua and a careful examination of known impacts of rats and rabbits on island ecosystems, Service and DLNR biologists, in consultation with other experts, have concluded that the proposed eradication of rodents and rabbits is a prudent management action. Successful eradication would allow re-colonization and restoration of several species of plants and seabirds on Lehua. Following the proposed eradication, there could still be a threat of re-introduction of non-native mammals from grounded vessels and transport of people and materials to the island. Service and DLNR wildlife managers are proposing to have the capability to respond rapidly to any such introductions.

The Service is engaging in the proposed Lehua restoration project under the management authorities granted it by the Endangered Species Act of 1973 as amended (16 U.S.C. 1531–1544), the Migratory Bird Treaty Act of 1918 as amended (16 U.S.C. 703–712) and the Fish and Wildlife Act of 1956 as amended (16 U.S.C. 742a–742j, not including 742 d–l). The DLNR is engaging in this project under the authorities of Hawaii Revised Statutes 183D–4 and 195D–5, which authorize it to manage wildlife sanctuaries and to manage and protect indigenous and endangered species and their associated ecosystems.

The Service and the DLNR are proposing to conduct an environmental review of the Lehua Island Ecosystem Restoration Project and prepare a joint Federal/State environmental document for impacts related to the ecosystem and the human environment. Alternatives for eradication may include the following methods or a combination of these methods: aerial broadcast of bait pellets containing rodenticides, hand broadcast of rodenticide pellets and/or placing rodenticides in bait stations for rat eradication; and shooting and/or trapping for rabbit eradication. Eradications could potentially be followed by monitoring the success of the removal actions and the response of native biota to alien species removal.

The environmental review will analyze the Lehua Island Ecosystem Restoration Project, as well as a full range of reasonable alternatives, and the associated impacts of each alternative. Should information become available during the scoping process that indicates the likelihood of significant environmental impacts from the Lehua Island Ecosystem Restoration Project, the Service will proceed with preparation of an environmental impact statement (EIS). Otherwise, an environmental assessment will be prepared to determine whether an EIS is needed.

The Service and the DLNR are requesting written comments regarding the proposed action from interested individuals, organizations and agencies. Respondents should address concerns regarding potential environmental impacts to the human environment, applicable mitigation and reasonable alternatives they feel could be included in the environmental analysis. Additional information, including the time and location of the public meeting, any changes to the project scope, and availability of draft documents for review will be sent out via local and regional press releases and direct mailings.

The environmental review of this project will be conducted in accordance with the requirements of the National Environmental Policy Act of 1969, as amended (42 U.S.C. 4321 *et seq.*), National Environmental Policy Act Regulations 40 CFR (1500–1508), other appropriate Federal laws and regulations, and policies and procedures of the Service for compliance with those regulations.

Dated: April 15, 2004.

Carolyn A. Bohan,

Regional Director, Fish and Wildlife Service, Region 1, Portland, Oregon.

[FR Doc. 04–11075 Filed 5–14–04; 8:45 am]

BILLING CODE 4310–55–P

DEPARTMENT OF THE INTERIOR

Fish and Wildlife Service

Issuance of Permits

AGENCY: Fish and Wildlife Service, Interior.

ACTION: Notice of issuance of permits for marine mammals.

SUMMARY: The following permits were issued.

ADDRESSES: Documents and other information submitted with these applications are available for review, subject to the requirements of the

Privacy Act and Freedom of Information Act, by any party who submits a written request for a copy of such documents to: U.S. Fish and Wildlife Service, Division of Management Authority, 4401 North Fairfax Drive, Room 700, Arlington, Virginia 22203; fax (703) 358–2281.

FOR FURTHER INFORMATION CONTACT: Division of Management Authority, telephone (703) 358–2104.

SUPPLEMENTARY INFORMATION:

Notice is hereby given that on the dates below, as authorized by the provisions of the the Marine Mammal Protection Act of 1972, *as amended* (16 U.S.C. 1361 *et seq.*), the Fish and Wildlife Service issued the requested permit(s) subject to certain conditions set forth therein.

Marine Mammals

Permit No.	Applicant	Receipt of application **Federal Register** notice	Permit issuance date
071799	Jennifer L. Miksis	68 FR 41167; July 10, 2003	March 31, 2004.
081346	Edward L. Keller	69 FR 5568; February 5, 2004	April 8, 2004.
081539	Lance K. Parks	69 FR 5569; February 5, 2004	April 12, 2004.
082026	Albert Cheramie	69 FR 5568; February 5, 2004	Apri 8, 2004.
082660	Thomas H. Viuf	69 FR 7979; February 20, 2004	April 14, 2004.

Dated: April 23, 2004.

Monica Farris,

Senior Permit Biologist, Branch of Permits, Division of Management Authority.

[FR Doc. 04–11083 Filed 5–14–04; 8:45 am]

BILLING CODE 4310–55–P

DEPARTMENT OF THE INTERIOR

Minerals Management Service

Minerals Management Service Request for Public Nominations to the Royalty Policy Committee

AGENCY: Minerals Management Service, Interior.

ACTION: Request for nominations.

SUMMARY: The Director of the Minerals Management Service (MMS), an agency of the U.S. Department of the Interior, is requesting nominations for three public representatives to serve on the Department's Royalty Policy Committee (RPC). These nominations may originate from State and local governments, universities, organizations, or individuals, and they may include self-nominations. Nominees should have the expertise in royalty management issues necessary to represent the public interest. The nomination package must include an updated copy of the nominee's resume or biography including their mailing and e-mail addresses. The MMS is committed to the Department's diversity policy, and nominators are requested to consider diversity when making nominations. Members serve without pay but will be reimbursed for travel expenses incurred when attending official RPC meetings. Reimbursements will be calculated in accordance with the Federal Travel Regulations as implemented by the Department.

DATES: Submit nominations on or before June 16, 2004.

ADDRESSES: Submit nominations to Gary Fields, Coordinator, Royalty Policy Committee, Minerals Revenue Management, Minerals Management Service, P.O. Box 25165, MS 300B2, Denver, CO 80225–0165.

FOR FURTHER INFORMATION CONTACT: Gary Fields, Program Analysis Office, Minerals Revenue Management, Minerals Management Service, P.O. Box 25165, MS 300B2, Denver, CO 80225–0165, telephone number (303) 231–3102, fax number (303) 231–3194, e-mail *gary.fields@mms.gov.*

SUPPLEMENTARY INFORMATION: To increase effectiveness, reduce costs, and promote fresh ideas, the MMS created three charter committees under the Federal Advisory Committee Act to advise the Secretary and top Department officials on minerals policy and operational issues. The RPC, the Outer Continental Shelf (OCS) Policy Committee, and the OCS Scientific Committee now fulfill the formal advisory functions previously performed by the Minerals Management Advisory Board, which has been disbanded. The RPC provides advice related to the performance of discretionary functions under the laws governing the Department's management of Federal and Indian mineral leases and revenues. The RPC reviews and comments on revenue management and other mineral-related policies and provides a forum to convey views representative of mineral lessees, operators, revenue payors, revenue recipients, governmental agencies, and the interested public. The locations and dates of future RPC meetings and other information will be published in the **Federal Register** and posted on the Internet at *http://www.mrm.mms.gov/Laws_R_D/RoyPC/RoyPC.htm.* Meetings are open to the public without advance registration, on a space available basis. The public may make statements during the meetings, to the extent time permits, and file written statements with the RPC for its consideration; copies of these written statements should be submitted to Mr. Fields. The RPC meetings are conducted under the authority of the Federal Advisory Committee Act (Pub. L. 92–463, 5 U.S.C., Appendix 1) and the Office of Management and Budget (Circular No. A–63, revised).

All correspondence, records, or information received in response to this Notice are subject to disclosure under the Freedom of Information Act. All information provided will be made public unless the respondent identifies which portions are proprietary. Please highlight the proprietary portions or mark the page(s) that contain proprietary data. Proprietary information is protected by the Federal Oil and Gas Royalty Management Act of 1982 (30 U.S.C. 1733), the Freedom of Information Act (5 U.S.C. 552(b)(4)), the Indian Minerals Development Act of 1982 (25 U.S.C. 2103) and Department regulations (43 CFR part 2).

Dated: May 11, 2004.

Cathy J. Hamilton,

Acting Associate Director for Minerals Revenue Management.

[FR Doc. 04–11100 Filed 5–14–04; 8:45 am]

BILLING CODE 4310–MR–P

DEPARTMENT OF LABOR

Bureau of Labor Statistics

Federal Economic Statistics Advisory Committee; Notice of Renewal

The Secretary of Labor has determined that renewal of the charter of the Federal Economic Statistics Advisory Committee (FESAC) is necessary and in the public interest in connection with the performance of duties imposed upon the Commissioner of Labor Statistics by 29 U.S.C. 1, 2, 3, 4, 5, 6, 7, 8, and 9. This determination follows consultation with the

Committee Management Secretariat, General Services Administration.

Name of Committee: Federal Economic Statistics Advisory Committee.

Purpose and Objective: The Committee presents advice and makes recommendations to the Department of Labor, Bureau of Labor Statistics and the Department of Commerce, Bureau of Economic Analysis and Bureau of the Census (the Agencies) from the perspective of the professional economics and statistics community. The Committee examines the Agencies' programs and provides advice on statistical methodology, research needed, and other technical matters related to the collection, tabulation, and analysis of Federal economic statistics.

Balanced Membership Plan: The Committee is a technical committee that is balanced in terms of the professional expertise required. It consists of approximately 14 members, appointed by the Agencies. Its members are economists, statisticians, and behavioral scientists who are recognized for their attainments and objectivity in their respective fields.

Duration: Continuing.

Agency Contact: Cheryl Kerr, 202–691–7808.

Signed at Washington, DC this 11th day of May, 2004.

Elaine L. Chao,

Secretary of Labor.

[FR Doc. 04–11079 Filed 5–14–04; 8:45 am]

BILLING CODE 4510–24–P

DEPARTMENT OF LABOR

Mine Safety and Health Administration

Petitions for Modification

The following parties have filed petitions to modify the application of existing safety standards under section 101(c) of the Federal Mine Safety and Health Act of 1977.

1. Dakota Westmoreland Corporation

[Docket No. M–2004–018–C]

Dakota Westmoreland Corporation, P.O. Box 39, Beulah, North Dakota 58523–0039 has filed a petition to modify the application of 30 CFR 77.1607(u) (Loading and haulage equipment; operation) to its Beulah Mine (MSHA I.D. No. 32–00043) located in Mercer County, North Dakota. The petitioner proposes to use a portable hydraulic unit (power pack) to tow large trucks in lieu of using a tow bar and safety chain. The petitioner states that qualified operators and mechanics would be task trained to perform the installations of the power pack, and if anything fails, the haul trucks' brakes would automatically set up and all towing procedures would be stopped. The petitioner asserts that the proposed alternative method would not result in a diminution of safety to the miners.

2. Oak Grove Resources, LLC

[Docket No. M–2004–019–C]

Oak Grove Resources, LLC, Gateway Center, Suite 1340, 401 Liberty Avenue, Pittsburgh, Pennsylvania 1522 has filed a petition to modify the application of 30 CFR 75.507 (Power connection points) to its Oak Grove Mine (MSHA I.D. No. 01–00851) located in Jefferson County, Alabama. The petitioner requests a modification of the existing standard to permit the use of high-voltage submersible pumps in boreholes into an area of the Oak Grove Mine where water has accumulated. The petitioner proposes to equip the pumps with probes to determine a high and low water level. The probes will consist of redundant electronic pressure transducers that are suitable for submersible pump control application. The probe circuits will be protected by a MSHA approved intrinsically safe barrier. The pump electric control will be designed and installed so that the pump will not start manually or automatically if water is below the low water probe level, the pump will cease operation when the water level is lower than the low water probe, and the pump will start operation when the water level reaches the high water probe. The petitioner has listed in this petition additional terms and conditions that would be implemented when using the proposed alternative method. The petitioner asserts that the proposed alternative method would provide at least the same measure of protection as the existing standard.

Request for Comments

Persons interested in these petitions are encouraged to submit comments via e-mail to *comments@msha.gov,* by fax at (202) 693–9441, or by regular mail to the Office of Standards, Regulations, and Variances, Mine Safety and Health Administration, 1100 Wilson Boulevard, Room 2350, Arlington, Virginia 22209. All comments must be postmarked or received in that office on or before June 16, 2004. Copies of these petitions are available for inspection at that address.

Dated at Arlington, Virginia this 11th day of May 2004.

Marvin W. Nichols, Jr.,

Director, Office of Standards, Regulations, and Variances.

[FR Doc. 04–11050 Filed 5–14–04; 8:45 am]

BILLING CODE 4510–43–P

FEDERAL MINE SAFETY AND HEALTH REVIEW COMMISSION

Meeting; Sunshine Act

May 7, 2004.

TIME AND DATE: 10 a.m., Tuesday, May 18, 2004.

PLACE: The Richard V. Backley Hearing Room, 9th Floor, 601 New Jersey Avenue, N.W., Washington, DC.

STATUS: Open.

MATTERS TO BE CONSIDERED: The Commission will consider and act upon the following in open session:

Secretary of Labor v. *Twentymile Coal Company,* Docket Nos. WEST 2000–480–R and WEST 2002–131. (Issues include whether Twentymile violated the task training regulation, 30 CFR 48.7(c), when it assigned miners to unplug a coal chute in its underground mine; whether the order at issue was sufficiently specific; whether the violation was significant and substantial (S&S); and whether the Secretary timely issued the penalty proposal.)

The Commission heard oral argument in this matter on April 29, 2004.

Any person attending this meeting who requires special accessibility features and/or auxiliary aids, such as sign language interpreters, must inform the Commission in advance of those needs. Subject to 29 CFR 2706.150(a)(3) and 2706.160(d).

CONTACT PERSON FOR MORE INFORMATION: Jean Ellen, (202) 434–9950/(202) 708–9300 for TDD Relay/1–800–877–8339 for toll free.

Jean H. Ellen,

Chief Docket Clerk.

[FR Doc. 04–11178 Filed 5–12–04; 4:51 pm]

BILLING CODE 6735–01–M

NATIONAL COUNCIL ON DISABILITY

Sunshine Act Meetings

TIMES AND DATES: 9 a.m.–4 p.m. July 25–26, 2004.

PLACE: Ritz-Carlton, Pentagon City, 1250 South Hayes Street, Arlington, Virginia.

STATUS: This meeting will be open to the public.

MATTERS TO BE CONSIDERED: Reports from the Chairperson and the Executive

Director, Team Reports, Unfinished Business, New Business, Announcements, Adjournment.

FOR FURTHER INFORMATION CONTACT: Mark S. Quigley, Director of Communications, National Council on Disability, 1331 F Street, NW., Suite 850, Washington, DC 20004; 202–272–2004 (Voice), 202–272–2074 (TTY), 202–272–2022 (Fax), *mquigley@ncd.gov* (E-mail).

AGENCY MISSION: The National Council on Disability (NCD) is an independent federal agency composed of 15 members appointed by the President and confirmed by the U.S. Senate. Its overall purpose is to promote policies, programs, practices, and procedures that guarantee equal opportunity for all people with disabilities, including people from culturally diverse backgrounds, regardless of the nature or significance of the disability; and to empower people with disabilities to achieve economic self-sufficiency, independent living, and inclusion and integration into all aspects of society.

ACCOMMODATIONS: Those needing sign language interpreters or other disability accommodations should notify NCD at least one week before this meeting.

LANGUAGE TRANSLATION: In accordance with E.O. 13166, Improving Access to Services for Persons with Limited English Proficiency, those people with disabilities who are limited English proficient and seek translation services for this meeting should notify NCD at least one week before this meeting.

MULTIPLE CHEMICAL SENSITIVITY/ ENVIRONMENTAL ILLNESS: People with multiple chemical sensitivity/ environmental illness must reduce their exposure to volatile chemical substances to attend this meeting. To reduce such exposure, NCD requests that attendees not wear perfumes or scented products at this meeting. Smoking is prohibited in meeting rooms and surrounding areas.

Dated: May 13, 2004.

Ethel D. Briggs,

Executive Director.

[FR Doc. 04–11230 Filed 5–13–04; 2:25 pm]

BILLING CODE 6820–MA–P

NATIONAL CREDIT UNION ADMINISTRATION

Sunshine Act Meeting

TIME AND DATE: 2 p.m., Thursday, May 20, 2004.

PLACE: Board Room, 7th Floor, Room 7047, 1775 Duke Street, Alexandria, VA 22314–3428.

STATUS: Open.

MATTERS TO BE CONSIDERED:

1. Notice of Proposed Rule: Parts 721 and 724 of NCUA's Rules and Regulations, Health Savings Accounts.
2. Proposed Rule: Part 717 of NCUA's Rules and Regulations, Fair Credit Reporting—Disposal of Consumer Information.

FOR FURTHER INFORMATION CONTACT: Becky Baker, Secretary of the Board, Telephone: 703–518–6304.

Becky Baker,

Secretary of the Board.

[FR Doc. 04–11243 Filed 5–13–04; 3:17 pm]

BILLING CODE 7535–01–M

NUCLEAR REGULATORY COMMISSION

Advisory Committee on Nuclear Waste; Notice of Meeting

The Advisory Committee on Nuclear Waste (ACNW) will hold its 150th meeting on May 25–27, 2004, Room T–2B3, 11545 Rockville Pike, Rockville, Maryland. The schedule for this meeting is as follows:

Tuesday, May 25, 2004

1 p.m.–3:10 p.m.: *Safeguards and Security Matters* (Closed)—The Committee will hear presentations by and hold discussions with representatives of the Office of Nuclear Material Safety and Safeguards (NMSS) to discuss safeguards and security matters.

3:25 p.m.–3:30 p.m.: Opening Remarks by the ACNW Chairman (Open)—The ACNW Chairman will make opening remarks regarding the conduct of the meeting.

3:30 p.m.–4:30 p.m.: Louisiana Energy Services (LES) Gas Centrifuge Uranium Enrichment Project (Open)—The Committee will hear presentations by and hold discussions with representatives of the NRC staff regarding the recent application, NRC Docket No. 70–3103, by LES to construct a gas centrifuge enrichment plant in Lea County, New Mexico.

4:30 p.m.–6 p.m.: Preparation of ACNW Reports (Open)—The Committee will discuss proposed ACNW reports on matters considered during this and previous meetings regarding reports on West Valley Performance Assessment Plans, Risk-Informed Regulation for NMSS Activities, and LES Gas Centrifuge Uranium Enrichment Program (tentative).

Wednesday, May 26, 2004

8:30 a.m.–8:40 a.m.: Opening Statement (Open)—The Chairman will make opening remarks regarding the conduct of today's sessions.

8:40 a.m.–9:40 a.m.: Review of DOE Technical Basis Documents Supporting the Yucca Mountain License Application (YMLA) (Open)—The Committee will hear presentations by and hold discussions with representatives of the NRC staff on its recent evaluation of DOE Analysis Model Reports intended to support the YMLA as discussed in a staff letter to M. Chu, DOE, dated April 10, 2004.

9:40 a.m.–10:40 a.m.: Decommissioning Program Changes (Open)—The Committee will hear a briefing by and hold discussions with the NRC staff on the recent changes to the decommissioning program, as described in SECY–04–0022.

11:10 a.m.–12:30 p.m.: Preparation for Meeting with the NRC Commissioners (Open)—The Committee will discuss proposed topics for a meeting with the NRC Commissioners, which is scheduled to be held between 9:30 a.m. and 11:30 a.m. on Wednesday, July 21, 2004.

1:45 p.m.–5:30 p.m.: Preparation of ACNW Reports (Open)—The Committee will discuss proposed ACNW reports on matters considered during this and previous meetings.

Thursday, May 27, 2004

8:30 a.m.–8:35 a.m.: Opening Statement (Open)—The Chairman will make opening remarks regarding the conduct of today's sessions.

8:35 a.m.–10 a.m.: Treatment of Uncertainties in Hydrologic Models: Conceptual Model and Parameter Uncertainty (Open)—The Committee will hear presentations by and hold discussions with representatives of the NRC staff, Pacific Northwest National Laboratory and the University of Arizona regarding the proposed strategy for coupling parameter uncertainty with conceptual model uncertainty in ground water modeling.

10:15 a.m.–12:45 p.m.: Preparation of ACNW Reports. (Open)—The Committee will continue its discussion of proposed ACNW letter reports.

12:45 p.m.–1 p.m.: Miscellaneous (Open)–The Committee will discuss matters related to the conduct of Committee activities and matters and specific issues that were not completed during previous meetings, as time and availability of information permit.

Procedures for the conduct of and participation in ACNW meetings were published in the **Federal Register** on October 16, 2003 (68 FR 59643). In accordance with these procedures, oral or written statements may be presented by members of the public. Electronic recordings will be permitted only during those portions of the meeting that are open to the public. Persons desiring to make oral statements should notify Mr. Howard J. Larson, Special Assistant (Telephone (301) 415–6805), between 7:30 a.m. and 4 p.m. e.t., as far in advance as practicable so that appropriate arrangements can be made to schedule the necessary time during the meeting for such statements. Use of still, motion picture, and television cameras during this meeting will be limited to selected portions of the meeting as determined by the ACNW Chairman. Information regarding the time to be set aside for taking pictures may be obtained by contacting the ACNW office prior to the meeting. In view of the possibility that the schedule for ACNW meetings may be adjusted by the Chairman as necessary to

facilitate the conduct of the meeting, persons planning to attend should notify Mr. Howard J. Larson as to their particular needs.

In accordance with Subsection 10(d) Public Law 92–463, I have determined that it is necessary to close portions of this meeting noted above to discuss and protect national security information as well as unclassified safeguards information pursuant to 5 U.S.C. 552b(c)(1) and (3).

Further information regarding topics to be discussed, whether the meeting has been canceled or rescheduled, the Chairman's ruling on requests for the opportunity to present oral statements and the time allotted therefore can be obtained by contacting Mr. Howard J. Larson.

ACNW meeting agenda, meeting transcripts, and letter reports are available through the NRC Public Document Room at *pdr@nrc.gov,* or by calling the PDR at 1–800–397–4209, or from the Publicly Available Records System (PARS) component of NRC's document system (ADAMS) which is accessible from the NRC Web site at *http://www.nrc.gov/reading-rm/adams.html* or *http://www.nrc.gov/reading-rm/doc-collections/* (ACRS & ACNW Mtg schedules/agendas).

Video teleconferencing service is available for observing open sessions of ACNW meetings. Those wishing to use this service for observing ACNW meetings should contact Mr. Theron Brown, ACNW Audiovisual Technician (Telephone (301) 415–8066), between 7:30 a.m. and 3:45 p.m. e.t., at least 10 days before the meeting to ensure the availability of this service. Individuals or organizations requesting this service will be responsible for telephone line charges and for providing the equipment and facilities that they use to establish the video teleconferencing link. The availability of video teleconferencing services is not guaranteed.

Dated: May 11, 2004.

Andrew L. Bates,

Advisory Committee Management Officer.

[FR Doc. 04–11074 Filed 5–14–04; 8:45 am]

BILLING CODE 7590–01–P

SECURITIES AND EXCHANGE COMMISSION

[Release No. 34–49679; File No. SR–CBOE–2004–27]

Self-Regulatory Organizations; Notice of Filing and Immediate Effectiveness of Proposed Rule Change by the Chicago Board Options Exchange, Inc. To Amend the Modified Rapid Opening Procedure Pilot Program

May 11, 2004.

Pursuant to section 19(b)(1) of the Securities Exchange Act of 1934 (''Act'') [1], and Rule 19b–4 [2] thereunder, notice is hereby given that on May 6, 2004, the Chicago Board Options Exchange, Inc. (''CBOE'' or ''Exchange'') filed with the Securities and Exchange Commission (''Commission'') the proposed rule change as described in Items I and II, below, which Items have been prepared by the CBOE. CBOE filed the proposal pursuant to Section 19(b)(3)(A) of the Act, [3] and Rule 19b–4(f)(6) thereunder, [4] which renders the proposal effective upon filing with the Commission. The Commission is publishing this notice to solicit comments on the proposed rule change from interested persons.

I. Self-Regulatory Organization's Statement of the Terms of Substance of the Proposed Rule Change

CBOE proposes to amend the modified ROS opening procedure that was approved by the Commission in SR–CBOE–2004–11 on a pilot basis.[5] The text of the proposed rule change is set forth below. Proposed new language is in *italics.* Proposed deletions are in [brackets].

* * * * *

Rule 6.2A. Rapid Opening System

This rule has no applicability to series trading on the CBOE Hybrid Opening System. Such series will be governed by Rule 6.2B.

(a)–(d) No change.

* * * Interpretation and Policies:

.01–.02 No change.

.03 Modified ROS Opening Procedure For Calculation of Settlement Prices of Volatility Indexes.

All provisions set forth in Rule 6.2A and the accompanying interpretations and policies shall remain in effect unless superseded or modified by this Rule 6.2A.03. To facilitate the calculation of a settlement price for futures and options contracts on volatility indexes, the Exchange shall utilize a modified ROS opening procedure for any index option series with respect to which a volatility index is calculated (including any index option series opened under Rule 6.2A.01). This modified ROS opening procedure will be utilized only on the final settlement date of the options and futures contracts on the applicable volatility index in each expiration month.

The following provisions shall be applicable when the modified ROS opening procedure set forth in this Rule 6.2A.03 is in effect for an index option with respect to which a volatility index is calculated: (i) All orders (including public customer, broker-dealer, Exchange market-maker and away market-maker and specialist orders), other than contingency orders, will be eligible to be placed on the Electronic Book for those option contract months whose prices are used to derive the volatility indexes on which options and futures are traded, for the purpose of permitting those orders to participate in the ROS opening price calculation for the applicable index option series; (ii) all market-makers, including any LMMs and SMMs, if applicable, who are required to log on to ROS or RAES for the current expiration cycle shall be required to log on to ROS during the modified ROS opening procedure if the market-maker is physically present in the trading crowd for that index option class; (iii) if the ROS system is implemented in an option contract for which LMMs have been appointed, the LMMs will collectively set the Autoquote values that will be used by ROS; (iv) ROS contracts to trade for that index option series will be assigned equally, to the greatest extent possible, to all logged-on market-makers, including any LMMs and SMMs if applicable; (v) all orders for participation in the modified ROS opening procedure, and any change to or cancellation of any such order, must be received prior to 8:2[5]8 a.m. (CST) in order to participate at the ROS opening price for that index option series; (vi) all orders for participation in the modified ROS opening procedure must be submitted electronically, except that market-makers on the Exchange's trading floor may submit paper tickets for market orders only; and (vii) until the Exchange implements a ROS system change that automatically generates cancellation orders for Exchange market-maker, away market-maker, specialist, and broker dealer orders which remain on the Electronic Book following the modified ROS opening procedure, any such orders that were entered in the Electronic Book but were not executed in the modified ROS opening procedure must be cancelled immediately following the opening of the applicable option series.

* * * * *

* * * * *

II. Self-Regulatory Organization's Statement of the Purpose of, and Statutory Basis for, the Proposed Rule Change

In its filing with the Commission, CBOE included statements concerning the purpose of and basis for the

[1] 15 U.S.C. 78s(b)(1).

[2] 17 CFR 240.19b–4.

[3] 15 U.S.C. 78s(b)(3)(A).

[4] 17 CFR 240.19b–4(f)(6).

[5] *See* Securities Exchange Act Release No. 49468 (March 24, 2004), 69 FR 17000 (March 31, 2004).

proposed rule change and discussed any comments it received on the proposed rule change. The text of these statements may be examined at the places specified in Item IV below. CBOE has prepared summaries, set forth in Sections A, B and C below, of the most significant aspects of such statements.

A. Self-Regulatory Organization's Statement of the Purpose of, and Statutory Basis for, the Proposed Rule Change

1. Purpose

On March 24, 2004, the Commission approved the implementation of a modified ROS opening procedure on a pilot basis through November 17, 2004. The modified ROS opening procedure pilot program facilitates the trading of options and futures on volatility indexes intended to be traded on CBOE or on CBOE Futures Exchange, LLC (''CFE'') by modifying certain of the rules that govern ROS for index option series whose prices are used to derive the volatility indexes on which options and futures are traded. The modified ROS opening procedure pilot program also expands the types of orders for these index options that may be placed on the electronic book for participation in ROS at the time when settlement values for volatility index options and futures are being determined. Specifically, the modified ROS opening procedure pilot program allows all orders (including public customer, broker-dealer, Exchange market-maker and away market-maker and specialist orders), other than contingency orders, to be eligible to be placed on the electronic book for those option contract months whose prices are used to derive the volatility indexes on which options and futures are traded, for the purpose of permitting those orders to participate in the ROS opening price calculation for the applicable index option series. The modified ROS opening procedure pilot program is only used on the settlement days of options and futures on volatility indexes traded on CBOE or CFE. Currently, the modified ROS opening procedure pilot program is in use with respect to S&P 500 Composite Stock Price Index (''SPX'') options whose prices are used to derive the settlement value of futures on the CBOE Volatility Index traded on CFE.

For purposes of establishing a cut-off time for the placement of orders on the electronic book for participation in the modified ROS opening procedure, CBOE Rule 6.2A.03(v) under the modified ROS opening procedure pilot program requires these orders to be received by 8:25 a.m. The proposed rule change extends this cut-off time to 8:28 a.m. This extended cut-off time will provide market participants with additional time to monitor potential changes in the market that may occur up until the 8:28 a.m. cut-off time and to respond to those changes through the placement of orders, or cancellations or changes to orders previously placed on the electronic book, up until 8:28 a.m.

In addition, since the approval of the modified ROS opening procedure pilot program, CBOE has further discussed the cut-off time with Lead Market-Makers who will review the order imbalances and collectively set the Autoquote values that will be used by ROS in calculating the opening prices for the SPX option series pursuant to CBOE Rule 6.2A.03(iii). They have indicated to CBOE their belief that a two-minute interval (from 8:28 a.m. to 8:30 a.m.) rather than the current five-minute interval (from 8:25 a.m. to 8:30 a.m.) is sufficient for them to review the order imbalances on the electronic book and collectively set the Autoquote values. For these reasons, CBOE believes the extended cut-off time will improve the operation of the modified ROS opening procedure pilot program.

2. Statutory Basis

The proposed rule change will provide additional time for market participants to place orders (including public customer, broker-dealer, Exchange market-maker and away market-maker and specialist orders), other than contingency orders, on the electronic book on days that the modified ROS opening procedure pilot program is implemented, which will further enable market participants to respond to potential changes in the market and therefore better fulfill their investment objectives. The Exchange has also filed with the Commission a proposed rule change that seeks permanent approval of the modified ROS opening procedure pilot program.[6] Accordingly, the proposed rule change is consistent with Section 6(b) of the Act in general and furthers the objectives of Section 6(b)(5) in particular in that it should promote just and equitable principles of trade, remove impediments to and perfect the mechanism of a free and open market and a national market system, and, in general, protect investors and the public interest.

[6] *See* Securities Exchange Act Release No. 49614 (April 26, 2004), 69 FR 23837 (April 30, 2004) (SR–CBOE–2004–23).

B. Self-Regulatory Organization's Statement on Burden on Competition

CBOE does not believe that the proposed rule change will impose any burden on competition that is not necessary or appropriate in furtherance of the purposes of the Act.

C. Self-Regulatory Organization's Statement on Comments on the Proposed Rule Change Received From Members, Participants, or Others No written comments were solicited or received with respect to the proposed rule change.

III. Date of Effectiveness of the Proposed Rule Change and Timing for Commission Action

The foregoing rule change has become effective pursuant to Section 19(b)(3)(A) of the Act[7] and subparagraph (f)(6) of Rule 19b–4[8] thereunder because the Exchange has designated the proposed rule change as one that does not: (i) Significantly affect the protection of investors or the public interest; (ii) impose any significant burden on competition; (iii) become operative for 30 days from the date on which it was filed, or such shorter time as the Commission may designate; and the Exchange has given the Commission written notice of its intention to file the proposed rule change at least five business days prior to filing, or such shorter time as designated by the Commission. At any time within 60 days of the filing of such proposed rule change, the Commission may summarily abrogate such rule change if it appears to the Commission that such action is necessary or appropriate in the public interest, for the protection of investors, or otherwise in furtherance of the purposes of the Act.

CBOE has requested a waiver of the 30-day operative delay. The Commission believes, consistent with the protection of investors and the public interest, that such waiver will permit CBOE to put the proposed rule change into effect prior to May 19, 2004, which is the first settlement date of the CBOE Volatility Index futures contract, and will also permit CBOE to provide advance notice of this change to market participants prior to that date. For these reasons, the Commission designates the proposal to be effective and operative upon filing with the Commission.[9]

[7] 15 U.S.C. 78s(b)(3)(A).

[8] 17 CFR 240.19b–4(f)(6).

[9] For purposes only of waiving the operative date of this proposal, the Commission has considered the proposed rule's impact on efficiency, competition, and capital formation. 15 U.S.C. 78c(f).

IV. Solicitation of Comments

Interested persons are invited to submit written data, views, and arguments concerning the foregoing, including whether the proposed rule change is consistent with the Act. Comments may be submitted by any of the following methods:

Electronic comments:

• Use the Commission's Internet comment form (*http://www.sec.gov/rules/sro.shtml*); or

• Send an e-mail to *rule-comments@sec.gov.* Please include File Number SR–CBOE–2004–27 on the subject line.

Paper comments:

• Send paper comments in triplicate to Jonathan G. Katz, Secretary, Securities and Exchange Commission, 450 Fifth Street, NW., Washington, DC 20549–0609.

All submissions should refer to File Number SR–CBOE–2004–27. This file number should be included on the subject line if e-mail is used. To help the Commission process and review your comments more efficiently, please use only one method. The Commission will post all comments on the Commission's Internet Web site (*http://www.sec.gov/rules/sro.shtml*). Copies of the submission, all subsequent amendments, all written statements with respect to the proposed rule change that are filed with the Commission, and all written communications relating to the proposed rule change between the Commission and any person, other than those that may be withheld from the public in accordance with the provisions of 5 U.S.C. 552, will be available for inspection and copying in the Commission's Public Reference Section, 450 Fifth Street, NW., Washington, DC 20549–0609. Copies of such filing also will be available for inspection and copying at the principal office of the CBOE. All comments received will be posted without change; the Commission does not edit personal identifying information from submissions. You should submit only information that you wish to make available publicly. All submissions should refer to File Number SR–CBOE–2004–27 and should be submitted on or before June 7, 2004.

For the Commission, by the Division of Market Regulation, pursuant to delegated authority.[10]

Jill M. Peterson,

Assistant Secretary.

[FR Doc. 04–11056 Filed 5–14–04; 8:45 am]

BILLING CODE 8010–01–P

[10] 17 CFR 200.30–3(a)(12).

SECURITIES AND EXCHANGE COMMISSION

[Release No. 34–49670; File No. SR–NASD–2004–068]

Self-Regulatory Organizations; Notice of Filing and Order Granting Accelerated Approval of a Proposed Rule Change and Amendment No. 1 Thereto by the National Association of Securities Dealers, Inc. Relating to the Listing and Trading of Accelerated Return Notes Linked to the Nikkei 225 Index

May 7, 2004.

Pursuant to section 19(b)(1) of the Securities Exchange Act of 1934 (''Act''),[1] and Rule 19b–4 thereunder,[2] notice is hereby given that on April 22, 2004, the National Association of Securities Dealers, Inc. (''NASD''), through its subsidiary, The Nasdaq Stock Market, Inc. (''Nasdaq''), filed with the Securities and Exchange Commission (''SEC'' or ''Commission'') the proposed rule change as described in Items I and II below, which Items have been prepared by Nasdaq. Nasdaq filed Amendment No. 1 to the proposed rule change on May 7, 2004.[3] The Commission is publishing this notice to solicit comments on the proposed rule change, as amended, from interested persons and is approving the proposal on an accelerated basis.

I. Self-Regulatory Organization's Statement of the Terms of Substance of the Proposed Rule Change

Nasdaq proposes to list and trade Accelerated Return Notes Linked to the Nikkei 225® Index (''Notes'') issued by Merrill Lynch & Co., Inc. (''Merrill Lynch''). This proposed rule change pertains to the Notes described and due as indicated in Merrill Lynch's Prospectus Supplements dated February 26, 2004 and April 28, 2004.

II. Self-Regulatory Organization's Statement of the Purpose of, and Statutory Basis for, the Proposed Rule Change

In its filing with the Commission, Nasdaq included statements concerning the purpose of and basis for the proposed rule change and discussed any comments it received on the proposed rule change. The text of these statements may be examined at the places specified in Item III below. Nasdaq has prepared summaries, set forth in Sections A, B, and C below, of the most significant aspects of such statements.

A. Self-Regulatory Organization's Statement of the Purpose of, and the Statutory Basis for, the Proposed Rule Change

1. Purpose

Nasdaq proposes to list and trade notes, the return on which is based upon the Nikkei 225 Index (''Index'').

Under NASD Rule 4420(f), Nasdaq may approve for listing and trading securities which cannot be readily categorized under traditional listing guidelines.[4] Nasdaq proposes to list for trading notes based on the Index under NASD Rule 4420(f). The Notes, which will be registered under section 12 of the Act, will initially be subject to Nasdaq's listing criteria for other securities under NASD Rule 4420(f). Specifically, under NASD Rule 4420(f)(1):

(A) The issuer shall have assets in excess of $100 million and stockholders' equity of at least $10 million.[5] In the case of an issuer which is unable to satisfy the income criteria set forth in paragraph (a)(1), Nasdaq generally will require the issuer to have the following: (i) Assets in excess of $200 million and stockholders' equity of at least $10 million; or (ii) assets in excess of $100 million and stockholders' equity of at least $20 million;

(B) There must be a minimum of 400 holders of the security, provided, however, that if the instrument is traded in $1,000 denominations, there must be a minimum of 100 holders;

(C) For equity securities designated pursuant to this paragraph, there must be a minimum public distribution of 1,000,000 trading units;

(D) The aggregate market value/principal amount of the security will be at least $4 million.

In addition, Merrill Lynch satisfies the listed marketplace requirement set forth in NASD Rule 4420(f)(2).[6] Lastly, pursuant to NASD Rule 4420(f)(3), prior to the commencement of trading of the Notes, Nasdaq will distribute a circular

[1] 15 U.S.C. 78s(b)(l).

[2] 17 CFR 240. 19b–4.

[3] *See* letter from Alex Kogan, Associate General Counsel, Nasdaq, to Katherine A. England, Assistant Director, Division of Market Regulation (''Division''), Commission, dated May 7, 2004 (''Amendment No. 1''). In Amendment No. 1, Nasdaq provided certain details about the Nikkei 225 Index.

[4] *See* Securities Exchange Act Release No. 32988 (September 29, 1993), 58 FR 52124 (October 6, 1993).

[5] Merrill Lynch satisfies this listing criterion.

[6] NASD Rule 4420(f)(2) requires issuers of securities designated pursuant to this paragraph to be listed on The Nasdaq National Market or the New York Stock Exchange, Inc. (''NYSE'') or be an affiliate of a company listed on The Nasdaq National Market or the NYSE; provided, however, that the provisions of NASD Rule 4450 will be applied to sovereign issuers of ''other'' securities on a case-by-case basis.

to members providing guidance regarding compliance responsibilities and requirements, including suitability recommendations, and highlighting the special risks and characteristics of the Notes. In particular, Nasdaq will advise members recommending a transaction in the Notes to have reasonable grounds for believing that the recommendation is suitable for such customer upon the basis of the facts, if any, disclosed by such customer as to his other security holdings and as to his financial situation and needs. In addition, prior to the execution of a transaction in the Notes that has been recommended to a non-institutional customer, a member shall make reasonable efforts to obtain information concerning: (1) The customer's financial status; (2) the customer's tax status; (3) the customer's investment objectives; and (4) such other information used or considered to be reasonable by such member in making recommendations to the customer.

The Notes will be subject to Nasdaq's continued listing criterion for other securities pursuant to NASD Rule 4450(c). Under this criterion, the aggregate market value or principal amount of publicly-held units must be at least $1 million. The Notes also must have at least two registered and active market makers as required by NASD Rule 4310(c)(1). Nasdaq will also consider prohibiting the continued listing of the Notes if Merrill Lynch is not able to meet its obligations on the Notes.

The Notes are a series of senior non-convertible debt securities that will be issued by Merrill Lynch and will not be secured by collateral. The Notes will have a term of not less than one, nor more than four, years. The Notes will be issued in denominations of whole units (''Unit''), with each Unit representing a single Note. The original public offering price will be $10 per Unit. The Notes will not pay interest and are not subject to redemption by Merrill Lynch or at the option of any beneficial owner before maturity in 2005. The Notes will mature on June 16, 2005.

At maturity, if the value of the Index has increased, a beneficial owner will be entitled to receive a payment on the Notes based on triple the amount of that percentage increase, not to exceed a maximum payment per Unit (the ''Capped Value'') of $11.80. Thus, the Notes provide investors the opportunity to obtain upside leveraged returns based on the Index subject to a cap that is expected to represent an appreciation of 18% over the original public offering price of the Notes. Unlike ordinary debt securities, the Notes do not guarantee any return of principal at maturity. However, the Notes are not leveraged on the downside; rather, the value of the Notes declines on a one-to-one basis with the Index. Therefore, if the value of the Index has declined at maturity, a beneficial owner will receive less, and possibly significantly less, than the original public offering price of $10 per Unit.

The payment that a beneficial owner will be entitled to receive (the ''Redemption Amount'') depends entirely on the relation of the average of the values of the Index at the close of the market on five business days shortly before the maturity of the Notes (the ''Ending Value'') and the closing value of the Index on the date the Notes are priced for initial sale to the public (the ''Starting Value'').

If the Ending Value is less than or equal to the Starting Value, the Redemption Amount per Unit will equal:

$$\$10 \times \left(\frac{\text{Ending Value}}{\text{Starting Value}} \right)$$

If the Ending Value is greater than the Starting Value, the Redemption Amount per Unit will equal:

$$\$10 + \left(\$30 \times \left(\frac{\text{Ending Value} - \text{Starting Value}}{\text{Starting Value}} \right) \right)$$

provided, however, the Redemption Amount cannot exceed the Capped Value.

The Notes are cash-settled in U.S. dollars and do not give the holder any right to receive a portfolio security, dividend payments, or any other ownership right or interest in the portfolio or index of securities comprising the Index. The Notes are designed for investors who want to participate or gain exposure to the Index, subject to a cap, and who are willing to forego market interest payments on the Notes during such term. The Commission has previously approved the listing of other securities the performance of which has been linked to or based on, the Index.[7]

The Index is a stock index calculated, published and disseminated by Nihon Keizai Shimbun, Inc. (''NKS''). The Notes are not sponsored, endorsed, sold or promoted by NKS. NKS is a recognized service with business information in Japan and publishes a large business daily, The Nihon Keizai Shimbon, and for other financial newspapers. NKS is not affiliated with a securities broker or dealer.

The Index measures the composite price performance of selected Japanese stocks. The Index is currently based on 225 Underlying Stocks trading on the Tokyo Stock Exchange (''TSE'') and represents a broad cross-section of Japanese industry. All 225 of the stocks underlying the Index are stocks listed in the First Section of the TSE. Stocks listed in the First Section are among the most actively traded stocks on the TSE.

The Index is a modified, price-weighted index. Each stock's weight in the Index is based on its price per share rather than the total market capitalization of the issuer. NKS calculates the Index by multiplying the per share price of each Underlying Stock by the corresponding weighting factor for that Underlying Stock (a ''Weight Factor''), calculating the sum of all these products and dividing that sum by a divisor. The divisor, initially set on May 16, 1949 at 225, was 23.156 as of April 30, 2004, and is subject to periodic adjustments as set forth below. Each Weight Factor is computed by dividing ¥50 by the par value of the relevant Underlying Stock, so that the share price of each Underlying Stock when multiplied by its Weight Factor corresponds to a share price based on a uniform par value of ¥50. Each Weight Factor represents the number of shares of the related Underlying Stock which are included in one trading unit of the Index. The stock prices used in the calculation of the Index are those reported by a primary market for the Underlying Stocks, which is currently the TSE. The level of the Index is calculated once per minute during TSE

[7] *See* Securities Exchange Act Release Nos. 38940 (August 15, 1997), 62 FR 44735 (August 22, 1997) (approving the listing and trading of Market Index Target-Term Securities the return on which is based on changes in the value of a portfolio of 11 foreign indexes, including the Nikkei 225 Index); and 27565 (December 22, 1989), 55 FR 376 (January 4, 1990) (approving listing of Index Warrants based on the Nikkei Stock Average and noting the existence of a Memorandum of Understanding between the Commission and the Japanese Ministry of Finance for surveillance purposes).

trading hours. The value of the Index is readily accessible by U.S. investors at the following Web sites: *http://www.nni.nikkei.co.jp* and *http://www.bloomberg.com.* As noted below, because of the time difference between Tokyo and New York, the closing level of the Index on a trading day will generally be available in the United States by the opening of business on the same calendar day.

In order to maintain continuity in the level of the Index in the event of certain changes due to non-market factors affecting the Underlying Stocks, such as the addition or deletion of stocks, substitution of stocks, stock dividends, stock splits or distributions of assets to stockholders, the divisor used in calculating the Index is adjusted in a manner designed to prevent any instantaneous change or discontinuity in the level of the Index. The divisor remains at the new value until a further adjustment is necessary as the result of another change. As a result of each change affecting any Underlying Stock, the divisor is adjusted in such a way that the sum of all share prices immediately after the change multiplied by the applicable Weight Factor and divided by the new divisor, *i.e.,* the level of the Index immediately after the change, will equal the level of the Index immediately prior to the change.[8]

As of April 30, 2004, the average daily trading volume for a single Index component was approximately 4.8 million shares.[9] As of the same date, the market capitalization of the components ranged from 14.4 trillion yen to 33.7 billion yen. These figures correspond approximately to 130 billion U.S. dollars and 305 million U.S. dollars.

The Index is composed of 225 securities and is broad-based. The highest-weighted stock in the Index has the weight of 3.35%; all other components have lower weights. The top five stocks in the Index have the cumulative weight of approximately 14.3%.

NKS is under no obligation to continue the calculation and dissemination of the Index. In the event the calculation and dissemination of the Index is discontinued, Nasdaq will contact Commission staff and consider prohibiting the continued listing of the Notes.[10]

Since the Notes will be deemed equity securities for the purpose of NASD Rule 4420(f), the NASD and Nasdaq's existing equity trading rules will apply to the Notes. First, pursuant to NASD Rule 2310 and NASD IM–2310–2, members must have reasonable grounds for believing that a recommendation to a customer regarding the purchase, sale, or exchange of any security is suitable for such customer upon the basis of the facts, if any, disclosed by such customer as to his other security holdings and as to his financial situation and needs.[11] In addition, as previously described, Nasdaq will distribute a circular to members providing guidance regarding compliance responsibilities and requirements, including suitability recommendations, and highlighting the special risks and characteristics of the Notes. Furthermore, the Notes will be subject to the equity margin rules. Lastly, the regular equity trading hours of 9:30 a.m. to 4 p.m. will apply to transactions in the Notes.

Nasdaq represents that NASD's surveillance procedures are adequate to properly monitor the trading of the Notes. Specifically, NASD will rely on its current surveillance procedures governing equity securities and will include additional monitoring on key pricing dates.

If manipulative activity or other types of trading activity that raise regulatory concerns are suspected and involve Index component stocks, the NASD will rely on the Intermarket Surveillance Group (''ISG'') Agreement to obtain the needed information from the TSE. This Agreement obligates the NASD and the TSE to compile and transmit market surveillance information and resolve in good faith any disagreements regarding requests for information or responses thereto. Also, if it ever became necessary (for example, if, hypothetically, the TSE withdrew from the ISG), NASD would seek the Commission's assistance pursuant to memoranda of understanding or similar inter-governmental agreements or arrangements that may exist between the Commission and the Japanese securities regulators.[12]

Merrill Lynch will deliver a prospectus in connection with the initial purchase of the Notes. The procedure for the delivery of a prospectus will be the same as Merrill Lynch's current procedure involving primary offerings.

2. Statutory Basis

Nasdaq believes that the proposed rule change, as amended, is consistent with the provisions of section 15A of the Act,[13] in general, and with section 15A(b)(6) of the Act,[14] in particular, in that the proposal is designed to prevent fraudulent and manipulative acts and practices, to promote just and equitable principles of trade, to remove impediments to and perfect the mechanism of a free and open market and, in general, to protect investors and

[8] Underlying Stocks may be deleted or added by NKS. However, to maintain continuity in the Index, the policy of NKS is generally not to alter the composition of the Underlying Stocks except when an Underlying Stock is deleted in accordance with the following criteria. Any stock becoming ineligible for listing in the First Section of the TSE due to any of the following reasons will be deleted from the Underlying Stocks: bankruptcy of the issuer; merger of the issuer into, or acquisition of the issuer by, another company; delisting of the stock or transfer of the stock to the ''Seiri-Post'' because of excess debt of the issuer or because of any other reason; or transfer of the stock to the Second Section of the TSE. Upon deletion of a stock from the Index, NKS will select, in accordance with certain criteria established by it, a replacement for the deleted Underlying Stock. In an exceptional case, a newly listed stock in the First Section of the TSE that is recognized by NKS to be representative of a market may be added to the Underlying Stocks. As a result, an existing Underlying Stock with low trading volume and not representative of a market will be deleted.

[9] This figure represents the average number of shares traded for the past 30 trading days. It is calculated by taking the sum of the volumes of the individual Index components for the past 30 trading days and dividing it by 30.

[10] The TSE is one of the world's largest securities exchanges in terms of market capitalization. Trading hours are currently from 9 a.m. to 11 a.m. and from 12:30 p.m. to 3 p.m., Tokyo time, Monday through Friday. Due to the time zone difference, on any normal trading day the TSE will close prior to the opening of business in New York City on the same calendar day. Therefore, the closing level of the Index on a trading day will generally be available in the United States by the opening of business on the same calendar day.

The TSE has adopted certain measures, including daily price floors and ceilings on individual stocks, intended to prevent any extreme short-term price fluctuations resulting from order imbalances. In general, any stock listed on the TSE cannot be traded at a price lower than the applicable price floor or higher than the applicable price ceiling. These price floors and ceilings are expressed in absolute Japanese yen, rather than percentage limits based on the closing price of the stock on the previous trading day. In addition, when there is a major order imbalance in a listed stock, the TSE posts a ''special bid quote'' or a ''special asked quote'' for that stock at a specified higher or lower price level than the stock's last sale price in order to solicit counter-orders and balance supply and demand for the stock. Prospective investors should also be aware that the TSE may suspend the trading of individual stocks in certain limited and extraordinary circumstances, including, for example, unusual trading activity in that stock. As a result, changes in the Index may be limited by price limitations or special quotes, or by suspension of trading, on individual stocks which comprise the Index, and these limitations may, in turn, adversely affect the value of the Notes.

[11] NASD Rule 2310(b) requires members to make reasonable efforts to obtain information concerning a customer's financial status, a customer's tax status, the customer's investment objectives, and such other information used or considered to be reasonable by such member or registered representative in making recommendations to the customer.

[12] Telephone conversation between Alex Kogan, Associate General Counsel, Nasdaq, and Florence Harmon, Senior Special Counsel, Division, Commission, dated May 7, 2004.

[13] 15 U.S.C. 78o–3.

[14] 15 U.S.C. 78o–3(b)(6).

the public interest. Specifically, the proposed rule change will provide investors with another investment vehicle based on the Index.

B. Self-Regulatory Organization's Statement on Burden on Competition

Nasdaq does not believe that the proposed rule change, as amended, will result in any burden on competition that is not necessary or appropriate in furtherance of the purposes of the Act, as amended.

C. Self-Regulatory Organization's Statement on Comments on the Proposed Rule Change Received From Members, Participants or Others

Written comments were neither solicited nor received.

III. Solicitation of Comments

Interested persons are invited to submit written data, views, and arguments concerning the foregoing, including whether the proposed rule change, as amended, is consistent with the Act. Comments may be submitted by any of the following methods:

Electronic comments:

• Use the Commission's Internet comment form (*http://www.sec.gov/rules/sro.shtml*); or

• Send an e-mail to *rule-comments@sec.gov. Please include File No. SR–NASD–2004–68 on the subject line.*

Paper comments:

• Send paper comments in triplicate to Jonathan G. Katz, Secretary, Securities and Exchange Commission, 450 Fifth Street, NW., Washington, DC 20549–0609. All submissions should refer to File No. SR–NASD–2004–068. This file number should be included on the subject line if e-mail is used. To help the Commission process and review your comments more efficiently, please use only one method. The Commission will post all comments on the Commission's Internet Web site (*http://www.sec.gov/rules/sro.shtml*). Copies of the submission, all subsequent amendments, all written statements with respect to the proposed rule change that are filed with the Commission, and all written communications relating to the proposed rule change between the Commission and any person, other than those that may be withheld from the public in accordance with the provisions of 5 U.S.C. 552, will be available for inspection and copying in the Commission's Public Reference Section, 450 Fifth Street, NW., Washington, DC 20549. Copies of such filing also will be available for inspection and copying at the principal office of Nasdaq. All comments received will be posted without change; the Commission does not edit personal identifying information from submissions. You should submit only information that you wish to make available publicly. All submissions should refer to File No. SR–NASD–2004–068 and should be submitted on or before June 7, 2004.

IV. Commission's Findings and Order Granting Accelerated Approval of Proposed Rule Change

Nasdaq has asked the Commission to approve the proposal on an accelerated basis to accommodate the timetable for listing the Notes. The Commission notes that it has previously approved the listing of securities the performance of which have been linked to or based on, the Index.[15] The Commission has also previously approved the listing of securities with a structure similar to that of the Notes.[16]

After careful consideration, the Commission finds that the proposed rule change, as amended, is consistent with the requirements of the Act and the rules and regulations thereunder,[17] applicable to a national securities association, and, in particular, with the requirements of section 15A(b)(6) of the Act,[18] in that it is designed to promote just and equitable principles of trade, to remove impediments to and perfect the mechanism of a free and open market, and, in general, to protect investors and the public interest.[19] The Commission believes that the Notes will provide investors with a means to participate in any percentage increase in the Index that exists at the maturity of the Notes, subject to the Capped Value. Specifically, as described more fully above, if the value of the Nikkei 225 Index has increased, a beneficial owner will be entitled to receive at maturity a payment on the Notes based on triple the amount of any percentage increase in the Index, not to exceed the Capped Value.

The Commission notes that the Notes are non-principal protected instruments, but are not leveraged on the downside. The Notes are debt instruments, the price of which will be derived from and based upon the value of the Nikkei 225 Index. The Notes do not have a minimum principal amount that will be repaid at maturity, and the payments of the Notes prior to or at maturity may be less than the original issue price of the Notes. Accordingly, the level of risk involved in the purchase or sale of the Notes is similar to the risk involved in the purchase or sale of traditional common stock. Because the final rate of return of the Notes is derivatively priced, based on the performance of the 225 common stocks underlying the Nikkei 225 Index, and because the Notes are instruments that do not guarantee a return of principal, there are several issues regarding the trading of this type of product. However, for the reasons discussed below, the Commission believes that Nasdaq's proposal adequately addresses the concerns raised by this type of product.

The Commission notes that the protections of NASD Rule 4420(f) were designed to address the concerns attendant to the trading hybrid securities like the Notes. In particular, by imposing the hybrid listing standards, suitability, disclosure, and compliance requirements noted above, the Commission believes that Nasdaq has addressed adequately the potential problems that could arise from the hybrid nature of the Notes. The Commission notes that Nasdaq will distribute a circular to its membership calling attention to the specific risks associated with the Notes. The Commission also notes that Merrill Lynch will deliver a prospectus in connection with the initial sales of the Notes. In addition, the Commission notes that Nasdaq will incorporate and rely upon its existing surveillance procedures governing equities, which have been deemed adequate under the Act.

In approving the product, the Commission recognizes that the Index is a stock index calculated, published and disseminated by NKS, which measures the composite price performance of selected Japanese stocks. The Index is currently based on 225 common stocks

[15] *See* Securities Exchange Act Release No. 34–38940 (August 15, 1997), 62 FR 44735 (August 22, 1997) (approving the listing and trading of Market Index Target-Term Securities the return on which is based on changes in the value of a portfolio of 11 foreign indexes, including the Nikkei 335 Index).

[16] *See* Securities Exchange Act Release Nos. 47464 (March 7, 2003), 68 FR 12116 (March 13, 2003) (approving the listing and trading of Market Recovery Notes Linked to the S&P 500 Index); 47009 (December 16, 2002), 67 FR 78540 (December 24, 2002) (approving the listing and trading of Market Recovery Notes linked to the Nasdaq-100 Index); and 46883 (November 21, 2002), 67 FR 71216 (November 29, 2002) (approving the listing and trading of Market Recovery Notes linked to the Dow Jones Industrial Average).

[17] The Commission findings in this approval order are prospective only from the date of this order. Prior to this approval order, Nasdaq began trading the Notes described in Merrill Lynch's Prospectus Supplement dated February 26, 2004. The Commission is concerned that Nasdaq failed to seek approval for the listing and trading of this product until after it began trading on Nasdaq.

[18] 15 U.S.C. 78*o*–3(b)(6).

[19] In approving this rule, the Commission notes that it has considered the proposed rule's impact on efficiency, competition, and capital formation. 15 U.S.C. 78c(f).

traded on the TSE and represents a broad cross-section of Japanese industry. All 225 underlying stocks are listed in the First Section of the TSE and are, therefore, among the most actively traded stocks on the TSE. The Nikkei is a modified, price-weighted index, which means a component stock's weight in the Nikkei is based on its price per share rather than total market capitalization of the issuer.

As stated above, NKS is under no obligation to continue the calculation and dissemination of the Index. In the event the calculation and dissemination of the Index is discontinued, Nasdaq represents that it will contact Commission staff and consider prohibiting the continued listing of the Notes. The Commission notes that the changes in the composition of the Nikkei 225 Index as made solely by NKS. The changes to these common stocks tend to be made infrequently with most substitutions the result of mergers and other extraordinary corporate actions. As of April 30, 2004, the average daily trading volume for a single Index component was approximately 4.8 million shares.[20] As of the same date, the market capitalization of the components ranged from 14.4 trillion yen to 33.7 billion yen. These figures correspond approximately to 130 billion U.S. dollars and 305 million U.S. dollars. The highest-weighted stock in the Index has the weight of 3.35%; all other components have lower weights. The top five stocks in the Index have the cumulative weight of approximately 14.3%. Given the compositions of the stocks underlying the Nikkei 225 Index, the Commission believes that the listing and trading of the Notes that are linked to the Nikkei 225 Index should not unduly impact the market for the underlying securities comprising the Nikkei 225 Index or raise manipulative concerns. As discussed more fully above, the underlying stocks comprising the Nikkei 225 Index are well-capitalized, highly liquid stocks.

In light of the fact that the Nikkei is a foreign index, the Commission believes adequate surveillance sharing agreements between the NASD and the TSE is a necessary prerequisite to deter and detect potential manipulations or other improper or illegal trading involving the Notes. While many of the issuers of the underlying securities comprising the Nikkei 225 are not subject to reporting requirements under the Act, Nasdaq represents that an adequate surveillance sharing agreement exists through the ISG between the NASD and the TSE to deter and detect potential manipulations or other improper trading in the underlying components. Therefore, Nasdaq's surveillance procedures will serve to deter as well as detect any potential manipulation. This agreement obligates the NASD and TSE to compile and transmit market surveillance information and resolve in good faith any disagreements regarding requests for information. Accordingly, the Commission believes that the surveillance sharing Agreement through ISG is adequate for the NASD to surveil the components of the Nikkei 225 for potential manipulation or other trading abuses between the markets with respect to the trading of the Notes based on the Nikkei 225.

Furthermore, the Commission notes that the Notes are depending upon the individual credit of the issuer, Merrill Lynch. To some extent this credit risk is minimized by the NASD's listing standards in NASD Rule 4420(f), which provide the only issuers satisfying substantial asset and equity requirements may issue securities such as the Notes. In addition, the NASD's hybrid listing standards further require that the Notes have a market value of at least $4 million. In any event, financial information regarding Merrill Lynch, in addition to the information on the 225 common stocks comprising the Nikkei 225 Index, will be publicly available.[21]

The Commission also has a systemic concern, however, that a broker-dealer such as Merrill Lynch, or a subsidiary providing a hedge for the issuer will incur position exposure. However, as the Commission has concluded in previous approval orders for other hybrid instruments issued by broker-dealers,[22] the Commission believes that this concern is minimal given the size of the Notes issuance in relation to the net worth of Merrill Lynch.

Finally, the Commission notes that the value of the Nikkei 225 Index will be disseminated at least once every minute throughout the trading day. Because the Nikkei 225 Index contains foreign securities and is composed of highly liquid and well capitalized securities, the Commission believes that providing access to the value of the Index at least once every minute throughout the trading day is sufficient and will provide benefits to investors in the product.

The Commission finds good cause for approving the proposed rule change, as amended, prior to the thirtieth day after the date of publication of notice of filing thereof in the **Federal Register**. The Commission believes that the Notes will provide investors with an additional investment choice and that accelerated approval of the proposal will allow investors to begin trading the Notes promptly. In addition, the Commission notes that it has previously approved the listing and trading of other derivative securities based on the Index and securities with a structure similar to that of the Notes.[23] Accordingly, the Commission believes that there is good cause, consistent with sections 15A(b)(6) and 19(b)(2) of the Act,[24] to approve the proposal, on an accelerated basis.

V. Conclusion

It is therefore ordered, pursuant to section 19(b)(2) of the Act,[25] that the proposed rule change, as amended (SR–NASD–2004–068) is hereby approved on an accelerated basis.

For the Commission, by the Division of Market Regulation, pursuant to delegated authority.[26]

Jill M. Peterson,

Assistant Secretary.

[FR Doc. 04–11055 Filed 5–14–04; 8:45 am]

BILLING CODE 8010–01–P

[20] This figure represents the average number of shares traded for the past 30 trading days. It is calculated by taking the sum of the volumes of the individual index components for the past 30 trading days and dividing it by 30.

[21] See *http://www.nni.nikkei.co.jp* and *http://www.bloomberg.com.*

[22] *See, e.g.*, Securities Exchange Act Release Nos. 44913 (October 9, 2001), 66 FR 52469 (October 15, 2001) (order approving the listing and trading of notes whose return is based on the performance of the Nasdaq-100 Index) (File No. SR-NASD–2001–73); 44483 (June 27, 2001), 66 FR 35677 (July 6, 2001) (order approving the listing and trading of notes whose return is based on a portfolio of 20 securities selected from the Amex Institutional Index) (File No. SR-Amex-2001–40); and 37744 (September 27, 1996), 61 FR 52480 (October 7, 1996) (order approving the listing and trading of notes whose return is based on a weighted portfolio of healthcare/biotechnology industry securities) (File No. SR–Amex–96–27).

[23] *See supra* notes 15 and 16.

[24] 15 U.S.C. 78o–3(b)(6) and 78s(b)(2).

[25] 15 U.S.C. 78s(b)(2).

[26] 17 CFR 200.30–3(a)(12).

SECURITIES AND EXCHANGE COMMISSION

[Release No. 34–49685; File No. SR–NSCC–2004–02]

Self-Regulatory Organizations; National Securities Clearing Corporation; Notice of Filing and Immediate Effectiveness of Proposed Rule Change Relating to the Acceptance of Non-Standard Settlement Input for Trade Recording Purposes

May 11, 2004.

Pursuant to Section 19(b)(1) of the Securities Exchange Act of 1934 (''Act''),[1] notice is hereby given that on April 7, 2004, National Securities Clearing Corporation (''NSCC'') filed with the Securities and Exchange Commission (''Commission'') the proposed rule change as described in Items I, II, and III below, which items have been prepared primarily by NSCC. The Commission is publishing this notice to solicit comments on the proposed rule change from interested parties.

I. Self-Regulatory Organization's Statement of the Terms of Substance of the Proposed Rule Change

The purpose of the proposed rule change is to modify NSCC's procedures to provide for the acceptance of non-standard settlement input (*i.e.,* cash, next day, and sellers-options transactions) from members that are either special representatives or self-regulatory organizations (''SROs'') submitting on behalf of NSCC members for the members'' over-the-counter (''OTC'') equity, regional exchange (''RIO''), and correspondent clearing (''CORR'') transactions.

II. Self-Regulatory Organization's Statement of the Purpose of, and Statutory Basis for, the Proposed Rule Change

In its filing with the Commission, NSCC included statements concerning the purpose of and basis for the proposed rule change and discussed any comments it received on the proposed rule change. The text of these statements may be examined at the places specified in Item IV below. NSCC has prepared summaries, set forth in sections (A), (B), and (C) below, of the most significant aspects of these statements.[2]

(A) Self-Regulatory Organization's Statement of the Purpose of, and Statutory Basis for, the Proposed Rule Change

The purpose of the proposed rule change is to modify NSCC's Procedures II (Trade Comparison Service) and IV (Special Representative Service) to provide for the acceptance by NSCC of non-standard settlement input (*i.e.,* cash, next day, and sellers-option transactions) from members that are either special representatives or SROs submitting on behalf of NSCC members for the members' OTC equity, RIO, and CORR transactions.[3] These transactions will not settle through NSCC. They must be settled directly between the parties.[4]

NSCC provides the same service for New York Stock Exchange (''NYSE'') and American Stock Exchange (''Amex'') equity securities and will offer a similar service for cash and next day settling transactions in fixed income securities through NSCC's real-time trade matching system (''RTTM'').[5]

NSCC has determined to provide this additional service at the request of its participants. Like the current service provided for NYSE and Amex equity securities and the RTTM service for fixed income securities transactions, members will settle all non-standard equity OTC, RIO, and CORR transactions outside of NSCC. This should ensure that there is no increased risk to NSCC or its participants. NSCC believes that accepting such non-standard settlement input will provide increased efficiencies for members by enabling them to further automate their processes for such transactions.

The proposed rule change is consistent with Section 17A(b)(3)(F) of the Act[6] and the rules and regulations thereunder because it will allow NSCC to provide increased efficiencies to participants with regard to their automation of processes for non-standard OTC, RIO, and CORR transactions and thereby will promote the prompt and accurate clearance and settlement of securities transactions.

(B) Self-Regulatory Organization's Statement on Burden on Competition

NSCC does not believe that the proposed rule change will have an impact on or impose a burden on competition.

(C) Self-Regulatory Organization's Statement on Comments on the Proposed Rule Change Received From Members, Participants or Others

No written comments relating to the proposed rule change have been solicited or received. NSCC has advised its members of the proposed changes in its Important Notice A#5678, P&S#5338 (February 18, 2004). NSCC will notify the Commission of any written comments received by NSCC.

III. Date of Effectiveness of the Proposed Rule Change and Timing for Commission Action

The foregoing rule change took effect upon filing pursuant to Section 19(b)(3)(A)(iii) of the Act[7] and Rule 19b–4(f)(4)[8] thereunder because the proposed rule effects a change in an existing service of NSCC that does not adversely affect the safeguarding of securities or funds in the custody or control of NSCC or for which it is responsible and does not significantly affect the respective rights or obligations of NSCC or persons using the service. At any time within sixty days of the filing of such rule change, the Commission may summarily abrogate such rule change if it appears to the Commission that such action is necessary or appropriate in the public interest, for the protection of investors, or otherwise in furtherance of the purposes of the Act.

IV. Solicitation of Comments

Interested persons are invited to submit written data, views, and arguments concerning the foregoing, including whether the proposed rule change is consistent with the Act. Comments may be submitted by any of the following methods:

Electronic comments:

- Use the Commission's Internet comment form (*http://www.sec.gov/rules/sro.shtml*) or
- Send an E-mail to *rule-comments@sec.gov.* Please include File

[1] 15 U.S.C. 78s(b)(1).

[2] The Commission has modified the text of the summaries prepared by NSCC.

[3] Cash, next day, and sellers-option trades in foreign securities will not be accepted for reporting by NSCC as reflected in revised NSCC Procedure II.C.2.

[4] At this time, NSCC will only accept locked-in trade input for trade recording purposes. NSCC will not accept transaction input from members for trade comparison purposes. Data submitted by members that are special representatives is submitted as lock-in trade data, as provided in NSCC Rule 39. Members should also note that because these non-standard settlement transactions will be settled outside of NSCC, a non-standard settling trade and its related corresponding clearing transaction will not be netted. Rather these transactions will result in two separate transactions that must be settled separately by the related parties.

[5] Securities Exchange Act Release No. 49294 (February 23, 2004), 69 FR 9668 (March 1, 2004) [File No. SR–NSCC–2003–15] (order approving NSCC's implementation of RTTM for fixed income securities). RTTM will commence receiving non-standard settlement input for comparison purposes in June 2004.

[6] 15 U.S.C. 77(q–1)(b)(3)(F).

[7] 15 U.S.C. 78s(b)(3)(A)(iii).

[8] 17 CFR 240.19b–4(f)(4).

Number SR–NSCC–2004–02 on the subject line.

Paper comments:

• Send paper comments in triplicate to Jonathan G. Katz, Secretary, Securities and Exchange Commission, 450 Fifth Street, NW., Washington, DC 20549–0609.

All submissions should refer to File Number SR–NSCC–2004–02. This file number should be included on the subject line if e-mail is used. To help the Commission process and review your comments more efficiently, please use only one method. The Commission will post all comments on the Commission's Internet Web site (*http://www.sec.gov/rules/sro.shtml*). Copies of the submission, all subsequent amendments, all written statements with respect to the proposed rule change that are filed with the Commission, and all written communications relating to the proposed rule change between the Commission and any person, other than those that may be withheld from the public in accordance with the provisions of 5 U.S.C. 552, will be available for inspection and copying in the Commission's Public Reference Section, 450 Fifth Street, NW., Washington, DC 20549. Copies of such filing also will be available for inspection and copying at the principal office of NSCC and on NSCC's Web site at *http://www.nscc.com.* All comments received will be posted without change. The Commission does not edit personal identifying information from submissions. You should submit only information that you wish to make available publicly. All submissions should refer to File Number SR–NSCC–2004–02 and should be submitted on or before June 7, 2004.

For the Commission, by the Division of Market Regulation, pursuant to delegated authority.[9]

Jill M. Peterson,

Assistant Secretary.

[FR Doc. 04–11097 Filed 5–14–04; 8:45 am]

BILLING CODE 8010–01–P

[9] 17 CFR 200.30–3(a)(12).

SECURITIES AND EXCHANGE COMMISSION

[Release No. 34–49671; File No. SR–PCX–2004–32]

Self-Regulatory Organizations; Notice of Filing and Immediate Effectiveness of Proposed Rule Change by the Pacific Exchange, Inc. Amending the Designated Options Examination Authority Fee

May 7, 2004.

Pursuant to section 19(b)(1) of the Securities Exchange Act of 1934 (''Act'')[1] and Rule 19b–4 thereunder,[2] notice is hereby given that on April 15, 2004, the Pacific Exchange, Inc. (''PCX'' or ''Exchange'') filed with the Securities and Exchange Commission (''Commission'') the proposed rule change as described in Items I, II, and III below, which Items have been prepared by the Exchange. The Commission is publishing this notice to solicit comments on the proposed rule change from interested persons.

I. Self-Regulatory Organization's Statement of the Terms of Substance of the Proposed Rule Change

The Exchange is proposing to amend its Schedule of Fees and Charges by changing the Designated Options Examination Authority (''DOEA'') fee charged to its members. The text of the proposed rule change is available at the Commission and the PCX.

II. Self-Regulatory Organization's Statement of the Purpose of, and Statutory Basis for, the Proposed Rule Change

In its filing with the Commission, the Exchange included statements concerning the purpose of and basis for the proposed rule change and discussed any comments it received on the proposed rule change. The text of these statements may be examined at the places specified in Item IV below. The Exchange has prepared summaries, set forth in Sections A, B, and C below, of the most significant aspects of such statements.

A. Self-Regulatory Organization's Statement of the Purpose of, and Statutory Basis for, the Proposed Rule Change

1. Purpose

In 2003, the Exchange filed a proposed rule change that allowed the Exchange to assess a $2000/month DOEA fee in order to recover the Exchange's costs of DOEA examinations for which it would be responsible.[3] At the time the Exchange set DOEA fee, it contemplated that it would conduct some of the examinations itself and would contract with the NASD to conduct other examinations. For that reason, the Exchange adopted a flat fee of $2000/month based upon the preexisting $2000/month Designated Examination Authority (''DEA'') fee. The Exchange anticipated that the costs of the examinations, whether conducted by the NASD or by the Exchange, would be about the same as the costs of the DEA examinations.

The Exchange has relied exclusively on the NASD to conduct its DOEA examinations and as a result, believes it is appropriate to amend its Schedule of Fees and Charges to change its DOEA fee from $2000/month to a fee that would be a pass through of the costs that the Exchange pays the NASD for conducting DOEA examinations plus a 17% administrative charge. The PCX believes that since the current DOEA fee applies to all firms, even to smaller firms that conduct largely equities business, but also do occasional options trades for their public customers, assessing a flat fee for all firms regardless of the number of Registered Representatives that they maintain, is inequitable. The Exchange represents that the 17% percent administration fee that it proposes to charge relates directly to costs actually incurred by the Exchange in the administration of this program.

2. Statutory Basis

The Exchange believes that the proposal is consistent with section 6(b) of the Act,[4] in general, and section 6(b)(4) of the Act,[5] in particular, in that it provides for the equitable allocation of reasonable fees among its members.

B. Self-Regulatory Organization's Statement on Burden on Competition

The Exchange does not believe that the proposed rule change will impose any burden on competition that is not necessary or appropriate in furtherance of the purposes of the Act.

C. Self-Regulatory Organization's Statement on Comments on the Proposed Rule Change Received From Members, Participants or Others

Written comments were neither solicited nor received with respect to the proposed rule change.

[1] 15 U.S.C. 78s(b)(1).

[2] 17 CFR 240.19b–4.

[3] *See* Securities Exchange Act Release No. 47577 (March 26, 2004), 68 FR 16109 (April 2, 2003) (File No. SR–PCX–2003–03).

[4] 15 U.S.C. 78f(b).

[5] 15 U.S.C. 78f(b)(4).

III. Date of Effectiveness of the Proposed Rule Change and Timing for Commission Action

The foregoing proposed rule change has become effective pursuant to Section 19(b)(3)(A)(ii) of the Act [6] and Rule 19b–4(f)(2) [7] thereunder, because it changes a fee imposed by the Exchange. At any time within 60 days of the filing of the proposed rule change, the Commission may summarily abrogate such rule change if it appears to the Commission that such action is necessary or appropriate in the public interest, for the protection of investors, or otherwise in furtherance of the purposes of the Act.

IV. Solicitation of Comments

Interested persons are invited to submit written data, views, and arguments concerning the foregoing, including whether the proposed rule change is consistent with the Act. Comments may be submitted by any of the following methods:

Electronic comments:

- Use the Commission's Internet comment form (*http://www.sec.gov/rules/sro.shtml*);
- Send an e-mail to *rule-comments@sec.gov.* Please include File Number SR–PCX–2004–32 on the subject line.

Paper comments:

- Send paper comments in triplicate to Jonathan G. Katz, Secretary, Securities and Exchange Commission, 450 Fifth Street, NW., Washington, DC 20549–0609.

All submissions should refer to File Number SR–PCX–2004–32. This file number should be included on the subject line if e-mail is used. To help the Commission process and review your comments more efficiently, please use only one method. The Commission will post all comments on the Commission's Internet Web site (*http://www.sec.gov/rules/sro.shtml*). Copies of the submission, all subsequent amendments, all written statements with respect to the proposed rule change that are filed with the Commission, and all written communications relating to the proposed rule change between the Commission and any person, other than those that may be withheld from the public in accordance with the provisions of 5 U.S.C. 552, will be available for inspection and copying in the Commission's Public Reference Section, 450 Fifth Street, NW., Washington, DC 20549–0609. Copies of such filing also will be available for inspection and copying at the principal office of the PCX. All comments received will be posted without change; the Commission does not edit personal identifying information from submissions. You should submit only information that you wish to make available publicly. All submissions should refer to File Number SR–PCX–2004–32 and should be submitted on or before June 7, 2004.

For the Commission, by the Division of Market Regulation, pursuant to delegated authority.[8]

Jill M. Peterson,

Assistant Secretary.

[FR Doc. 04–11053 Filed 5–14–04; 8:45 am]

BILLING CODE 8010–01–P

[6] 15 U.S.C. 78s(b)(3)(A)(ii).

[7] 17 CFR 240.19b–4(f)(2).

[8] 17 CFR 200.30–3(a)(12).

SECURITIES AND EXCHANGE COMMISSION

[Release No. 34–49664; File No. SR–PCX–2004–22]

Self-Regulatory Organizations; Order Granting Approval of Proposed Rule Change and Amendment Nos. 1 and 2 Thereto by the Pacific Exchange, Inc. and Notice of Filing and Order Granting Accelerated Approval To Amendment No. 2 Creating a New Order Type Entitled ''Auto Q Order''

May 6, 2004.

I. Introduction

On March 19, 2004, the Pacific Exchange, Inc. (''PCX'' or ''Exchange'') filed with the Securities and Exchange Commission (''Commission''), pursuant to section 19(b)(1) of the Securities Exchange Act of 1934 (''Act'') [1] and Rule 19b–4 thereunder,[2] a proposed rule change regarding a new order type. On March 29, 2004, PCX submitted Amendment No. 1 to the proposal.[3] The proposed rule change, as modified by Amendment No. 1, was published for notice and comment in the **Federal Register** on April 6, 2004.[4] The Commission received no comment letters on the proposal. On May 5, 2004, the PCX submitted Amendment No. 2 to the proposal.[5]

This order approves the proposed rule change, as modified by Amendment No. 1. Simultaneously, the Commission provides notice of filing of Amendment No. 2 and grants accelerated approval of Amendment No. 2.

II. Description of the Proposed Rule Change

As part of its efforts to enhance participation on the Archipelago Exchange facility(''ArcaEx''), PCX proposes to amend its rules governing ArcaEx to implement a new functionality type that would enable Market Makers [6] to automatically update their Q Orders.[7] The Exchange proposes to add an automatic updating feature called ''Auto Q'' that would automatically repost a Q Order in the ArcaEx book, after an execution, at a designated increment inferior to the price at which it was originally posted and for the same amount of shares. The Auto Q Order would continue to repost in the ArcaEx book, after an execution, at the determined increment and size until the total tradable size threshold is reached.

When entering an Auto Q Order, a Market Maker would establish the following parameters: (i) Price; (ii) size; (iii) buy or sell; (iv) increment update; and (v) total tradable size. Auto Q Orders will be governed by the price, time priority rules and order execution rules established in PCXE Rule 7.36. For example, superior priced displayed orders would be executed prior to Auto Q Orders and Auto Q Orders will not have precedence over same-priced displayed orders that are superior in time. Each reposted Auto Q Order would be assigned a new price, time priority as of the time of each reposting.[8] Further, Auto Q Orders that are reposted at the same price as a non-displayed order would take precedence in accordance with PCXE Rule 7.36.

III. Solicitation of Comments

Interested persons are invited to submit written data, views, and arguments concerning Amendment No. 2, including whether it is consistent with the Act. Comments may be submitted by any of the following methods:

[1] 15 U.S.C. 78s(b)(1).

[2] 17 CFR 240.19b–4.

[3] *See* letter from Mai S. Shiver, Acting Director and Senior Counsel, PCX, to Nancy J. Sanow, Assistant Director, Division of Market Regulation (''Division''), Commission, dated March 26, 2004 (''Amendment No. 1''). Amendment No. 1 superseded and replaced the original rule filing in its entirety.

[4] *See* Securities Exchange Act Release No. 45906 (March 30, 2004), 69 FR 18146.

[5] *See* letter from Mai S. Shiver, Acting Director and Senior Counsel, PCX, to Nancy J. Sanow, Assistant Director, Division, Commission, dated May 4, 2004 (''Amendment No. 2''). In Amendment No. 2, PCX revised the rule text to clarify that Auto Q Orders would be assigned a new price time priority as of the time of each reposting.

[6] PCXE Rule 1.1(u) defines Market Maker as an ETP Holder that acts as a Market Maker pursuant to PCXE Rule 7.

[7] *See* PCXE Rule 7.31 (defining ''Q Orders'' as limit orders that are submitted to ArcaEx by Market Makers) and 7.34 (specifying Market Makers' obligations to enter Q Orders).

[8] *See* Amendment No. 2, *supra* note 5.

Electronic comments:

• Use the Commission's Internet comment form (*http://www.sec.gov/rules/sro.shtml*); or

• Send an E-mail to *rule-comments@sec.gov*. Please include File Number SR–PCX–2004–22 on the subject line.

Paper comments:

• Send paper comments in triplicate to Jonathan G. Katz, Secretary, Securities and Exchange Commission, 450 Fifth Street, NW., Washington, DC 20549–0609.

All submissions should refer to File Number SR–PCX–2004–22. This file number should be included on the subject line if e-mail is used. To help the Commission process and review your comments more efficiently, please use only one method. The Commission will post all comments on the Commission's Internet Web site (*http://www.sec.gov/rules/sro.shtml*). Copies of the submission, all subsequent amendments, all written statements with respect to the proposed rule change that are filed with the Commission, and all written communications relating to the proposed rule change between the Commission and any person, other than those that may be withheld from the public in accordance with the provisions of 5 U.S.C. 552, will be available for inspection and copying in the Commission's Public Reference Section, 450 Fifth Street, NW., Washington, DC 20549. Copies of such filing also will be available for inspection and copying at the principal office of PCX. All comments received will be posted without change; the Commission does not edit personal identifying information from submissions. You should submit only information that you wish to make available publicly. All submissions should refer to File Number SR–PCX–2004–22 and should be submitted on or before June 7, 2004.

IV. Commission Findings and Order Granting Accelerated Approval

After careful review, the Commission finds that the proposed rule change is consistent with the requirements of the Act and the rules and regulations thereunder applicable to a national securities exchange [9] and the requirements of Section 6 of the Act.[10] In particular, the Commission finds that the proposal is consistent with section 6(b)(5) of the Act [11] in that the rule is designed to promote just and equitable principles of trade, to foster cooperation and coordination with persons engaged in regulating, clearing, settling, processing information with respect to, and facilitating transactions in securities, to remove impediments to and to perfect the mechanism of a free and open market and a national market system, and, in general, to protect investors and the public interest. The Commission believes that the Auto Q Order type may facilitate ArcaEx's market makers' compliance with their obligation to enter Q Orders. Further, the Commission notes that the application of the price time priority rules for each reposted Auto Q Order should prevent any unfair advantage for such orders vis-a-vis other order types. The Commission believes that the implementation of the Auto Q Order type may permit increased execution opportunities of Q Orders and promote a more efficient and effective market operation.

The Commission finds good cause for approving Amendment No. 2 prior to the thirtieth day after the date of publication of notice thereof in the **Federal Register**. In determining to grant accelerated approval, the Commission notes that Amendment No. 2 merely codifies a technical aspect of the proposal that was published for public comment.

V. Conclusion

It is therefore ordered, pursuant to section 19(b)(2) of the Act,[12] that the proposed rule change (File No. SR–PCX–2004–22), as amended by Amendment No. 1, be, and it hereby is, approved, and that Amendment No. 2 to the proposed rule change be, and hereby is, approved on an accelerated basis.

For the Commission, by the Division of Market Regulation, pursuant to delegated authority.[13]

Jill M. Peterson,

Assistant Secretary.

[FR Doc. 04–11054 Filed 5–14–04; 8:45 am]

BILLING CODE 8010–01–P

[9] The Commission has considered the proposal's impact on efficiency, competition and capital formation. 15 U.S.C. 78c(f).

[10] 15 U.S.C. 78f.

[11] 15 U.S.C. 78f(b)(5).

[12] 15 U.S.C. 78s(b)(2).

[13] 17 CFR 200.30–3(a)(12).

DEPARTMENT OF STATE

[Public Notice 4705]

Notice of Renewal of Advisory Committee on International Law

SUMMARY: The Department of State has renewed the Charter of the Advisory Committee on International Law. Through this Committee, the Department of State will continue to obtain the views and advice of a cross-section of the country's outstanding members of the legal profession on significant issues of international law. The Committee's consideration of these legal issues in the conduct of our foreign affairs provides a unique contribution to the creation and promotion of U.S. foreign policy. The Under Secretary for Management has determined the Committee is necessary and in the public interest.

The Committee comprises all former Legal Advisers of the Department of State and up to 20 individuals appointed by the current Legal Adviser. The Committee follows the procedures prescribed by the Federal Advisory Committee Act (FACA). Meetings will be open to the public unless a determination is made in accordance with section 10(d) of the FACA, 5 U.S.C. 552b(c)(1) and (4), that a meeting or a portion of the meeting should be closed to the public. Notice of each meeting will be provided for publication in the **Federal Register** as far in advance as possible prior to the meeting.

For further information, please contact Judith L. Osborn, Executive Director, Office of the Assistant Legal Adviser for United Nations Affairs, 202–647–2767 or *osbornjl@state.gov.*

Dated: May 10, 2004.

Judith L. Osborn,

Attorney-Adviser, Office of United Nations Affairs, Office of the Legal Adviser, Executive Director, Advisory Committee on International Law, Department of State.

[FR Doc. 04–11109 Filed 5–14–04; 8:45 am]

BILLING CODE 4710–08–P

TENNESSEE VALLEY AUTHORITY

Sunshine Act Meeting

AGENCY HOLDING THE MEETING: Tennessee Valley Authority (Meeting No. 1551).

TIME AND DATE: 9 a.m. (c.d.t.), May 19, 2004. University of Mississippi, Gertrude C. Ford Center for the Performing Arts, 100 University Avenue, Oxford, Mississippi.

STATUS: Open.

Agenda

Approval of minutes of meeting held on March 16, 2004

New Business

F—Other

F1. Reservoir Operations Study Preferred Alternative

C—Energy

C1. Delegation of authority to the Executive Vice President, Fossil Power Group, to enter into a contract with Norfolk Southern Railway Company for transportation of coal to John Sevier Fossil Plant

C2. Contract with Forney Corporation for the supply of igniters, flame scanners, and associated equipment and services for various fossil plants

C3. Supplement to contract with Pascor Atlantic for disconnect switches

C4. Contract with Nextel South Corp. to provide enhanced specialized mobile radio equipment and services for various TVA locations

C5. Supplement to contract with PO DesMarais Company for instrumentation and controls at any TVA plant

C6. Supplement to contract with CitiCapital Leasing for TVA fleet leasing

C7. Supplement to contract with PricewaterhouseCoopers LLP for independent external auditing and financial services

E—Real Property Transactions

E1. Grant of a permanent easement to the state of Tennessee for a highway improvement project, without charge, except for TVA's administrative costs, affecting approximately .51 acre of land at TVA's Waynesboro Primary Substation in Wayne County, Tennessee, Tract No. XWBRSS–2H

E2. Grant of a permanent easement to the state of Tennessee for a highway and bridge improvement project, without charge, except for TVA's administrative costs, affecting approximately 2.6 acres of land on Nickajack Reservoir in Marion County, Tennessee, Tract No. XTNJR–20H

E3. Sale of a permanent easement for commercial recreation purposes to Wayne R. Strain, affecting approximately 6.3 acres of land on Kentucky Reservoir in Marshall County, Kentucky, Tract No. XGIR–941RE, to allow the continued operation of the Lakeside Campground and Marina, a portion of which is located on TVA land

E4. Grant of a 30-year term public recreation easement to Decatur County, Tennessee, for use as a public park, without charge, with conditional option for renewals, affecting approximately 25.61 acres of land on Kentucky Reservoir in Decatur County, Tennessee, Tract No. XTGIR–153RE

E5. Abandonment of certain transmission line easement rights affecting approximately 9.14 acres, Tract No. WG–62, to the Industrial Development Board of the City of Decatur, Alabama, in exchange for transmission line easement rights affecting approximately 4.6 acres in Morgan County, Alabama, Tract No. MECGM–3

F—Other

F2. Approval to file a condemnation case to acquire a temporary right to enter to survey, appraise, and perform title investigations and related activities for a TVA power transmission line project affecting the Waynesboro-Clifton City 69–kV transmission line in Wayne County, Tennessee, Tract Nos. 3WCJR–1000TE and –1001TE

Information Items

1. Approval of a supplement to Contract No. 99998999 with G–UB–MK Constructors
2. Approval of the retention of net power proceeds and nonpower proceeds pursuant to section 26 of the TVA Act and of payment to the U.S. Treasury in accordance with Public Law No. 98–151
3. Designation and selection of Barclays Global Investors, N.A., as a new investment manager for the TVA Retirement System and investment management agreement between the Retirement System and the new investment manager
4. Designation and selection of Bridgewater Associates, Inc., and IronBridge Capital Management, LLC, as new investment managers for the TVA Retirement System and approval of the investment management agreements between the Retirement System and the new investment managers
5. Approval of Two-Part Real Time Pricing pilot arrangements with Eka Chemicals, Inc.
6. Approval of a supplement to a contract with Southern Cross Resources Australia Pty, Ltd., for the supply of uranium
7. Approval of a contract with the United States Enrichment Corporation for uranium enrichment and enriched uranium for Browns Ferry Nuclear Plant
8. Approval of a supplement to the contract with Chem-Nuclear Systems for burial of radioactive waste at the Barnwell facility in South Carolina

For more information: Please call TVA Media Relations at (865) 632–6000, Knoxville, Tennessee. Information is also available at TVA's Washington Office (202) 898–2999. People who plan to attend the meeting and have special needs should call (865) 632–6000. Anyone who wishes to comment on any of the agenda in writing may send their comments to: TVA Board of Directors, Board Agenda Comments, 400 West Summit Hill Drive, Knoxville, Tennessee 37902.

Dated: May 12, 2004.

Maureen H. Dunn,

General Counsel and Secretary.

[FR Doc. 04–11189 Filed 5–13–04; 11:03 am]

BILLING CODE 8120–08–P

DEPARTMENT OF TRANSPORTATION

Federal Railroad Administration

Proposed Agency Information Collection Activities; Comment Request

AGENCY: Federal Railroad Administration, DOT.

ACTION: Notice.

SUMMARY: In accordance with the Paperwork Reduction Act of 1995 and its implementing regulations, the Federal Railroad Administration (FRA) hereby announces that it is seeking approval of the following information collection activities. Before submitting these information collection requirements for clearance by the Office of Management and Budget (OMB), FRA is soliciting public comment on specific aspects of the activities identified below.

DATES: Comments must be received no later than July 16, 2004.

ADDRESSES: Submit written comments on any or all of the following proposed activities by mail to either: Mr. Robert Brogan, Office of Safety, Planning and Evaluation Division, RRS–21, Federal Railroad Administration, 1120 Vermont Ave., NW., Mail Stop 25, Washington, DC 20590, or Ms. Debra Steward, Office of Information Technology and Productivity Improvement, RAD–20, Federal Railroad Administration, 1120 Vermont Ave., NW., Mail Stop 35, Washington, DC 20590. Commenters requesting FRA to acknowledge receipt of their respective comments must include a self-addressed stamped postcard stating, ''Comments on OMB control number 2130-New.'' Alternatively, comments may be transmitted via facsimile to (202) 493–6230 or (202) 493–6170, or e-mail to Mr. Brogan at *robert.brogan@fra.dot.gov,* or to Ms. Steward at *debra.steward@fra.dot.gov.* Please refer

to the assigned OMB control number in any correspondence submitted. FRA will summarize comments received in response to this notice in a subsequent notice and include them in its information collection submission to OMB for approval.

FOR FURTHER INFORMATION CONTACT: Mr. Robert Brogan, Office of Planning and Evaluation Division, RRS–21, Federal Railroad Administration, 1120 Vermont Ave., NW., Mail Stop 17, Washington, DC 20590 (telephone: (202) 493–6292) or Debra Steward, Office of Information Technology and Productivity Improvement, RAD–20, Federal Railroad Administration, 1120 Vermont Ave., NW., Mail Stop 35, Washington, DC 20590 (telephone: (202) 493–6139). (These telephone numbers are not toll-free.)

SUPPLEMENTARY INFORMATION: The Paperwork Reduction Act of 1995 (PRA), Public Law 104–13, Section 2, 109 Stat. 163 (1995) (codified as revised at 44 U.S.C. 3501–3520), and its implementing regulations, 5 CFR part 1320, require Federal agencies to provide 60-days notice to the public for comment on information collection activities before seeking approval by OMB. 44 U.S.C. § 3506(c)(2)(A); 5 CFR §§ 1320.8(d)(1), 1320.10(e)(1), 1320.12(a). Specifically, FRA invites interested respondents to comment on the following summary of proposed information collection activities regarding (i) whether the information collection activities are necessary for FRA to properly execute its functions, including whether the activities will have practical utility; (ii) the accuracy of FRA's estimates of the burden of the information collection activities, including the validity of the methodology and assumptions used to determine the estimates; (iii) ways for FRA to enhance the quality, utility, and clarity of the information being collected; and (iv) ways for FRA to minimize the burden of information collection activities on the public by automated, electronic, mechanical, or other technological collection techniques or other forms of information technology (*e.g.,* permitting electronic submission of responses). *See* 44 U.S.C. 3506(c)(2)(A)(i)–(iv); 5 CFR § 1320.8(d)(1)(i)–(iv). FRA believes that soliciting public comment will promote its efforts to reduce the administrative and paperwork burdens associated with the collection of information mandated by Federal regulations. In summary, FRA reasons that comments received will advance three objectives: (i) Reduce reporting burdens; (ii) ensure that it organizes information collection requirements in a ''user friendly'' format to improve the use of such information; and (iii) accurately assess the resources expended to retrieve and produce information requested. *See* 44 U.S.C. 3501.

Below is a brief summary of proposed new information collection activities that FRA will submit for clearance by OMB as required under the PRA:

Title: Railroad Trespasser Death Study.

OMB Control Number: 2130-New.

Abstract: Trespasser deaths on railroad rights-of-way and other railroad property are the leading cause of fatalities attributable to railroad operations in the United States. In order to address this serious issue, interest groups, the railroad industry, and governments (Federal, State, and Local) must know more about the individuals who trespass. With such knowledge, specific educational programs, materials, and messages regarding the hazards and consequences of trespassing on railroad property can be developed and effectively distributed. Since currently available data are lacking in demographic detail, FRA proposes to conduct a study (using a private contractor) to obtain demographic data from local County Medial Examiners so as to develop a general, regional profile of ''typical'' trespassers in order to target audiences with appropriate education and enforcement campaigns that will reduce the annual number of injuries and fatalities.

Form Number(s): FRA F 6180.117.

Affected Public: County (Regional) Medical Examiners/Coroners.

Respondent Universe: 100 County (Regional) Medical Examiners/Coroners.

Frequency of Submission: On occasion.

Estimated Annual Burden: 125 hours.

Status: Regular Review.

Pursuant to 44 U.S.C. 3507(a) and 5 CFR 1320.5(b), 1320.8(b)(3)(vi), FRA informs. all interested parties that it may not conduct or sponsor, and a respondent is not required to respond to, a collection of information unless it displays a currently valid OMB control number.

Authority: 44 U.S.C. 3501–3520.

Issued in Washington, DC on May 12, 2004.

Kathy A. Weiner,

Director, Office of Information Technology and Support Systems, Federal Railroad Administration.

[FR Doc. 04–11145 Filed 5–14–04; 8:45 am]

BILLING CODE 4910–06–P

DEPARTMENT OF TRANSPORTATION

Federal Transit Administration

Implementation of Section 176 of the Consolidated Appropriations Act, 2004 (Pub. L. 108–199, Division F)

AGENCY: Federal Transit Administration (FTA), DOT.

ACTION: Notice.

SUMMARY: This notice provides information and instructions to grantees on the implementation of section 176 of the Consolidated Appropriations Act, 2004, (Pub. L. 108–199, Division F). Section 176 amends section 3027(c)(3) of TEA–21 to allow for operating assistance under 49 U.S.C. 5307. This assistance is available to a transit provider of services exclusively for elderly persons and persons with disabilities and that operate 25 or fewer vehicles in an urbanized area with a population of at least 200,000.

DATES: A letter of intent to apply for operating assistance under section 176 must be received by the appropriate FTA Regional Office on or before June 16, 2004. FTA will make a determination of the amount eligible applicants may use for operating assistance on or before July 16, 2004.

ADDRESSES: Addresses of the ten FTA Regional Offices are listed at the end of this notice in Appendix A.

FOR FURTHER INFORMATION CONTACT: The appropriate FTA Regional Administrator or Mary Martha Churchman, Director, Office of Resource Management and State Programs, (202) 366–2053.

SUPPLEMENTARY INFORMATION: Generally, operating assistance is not an eligible cost for recipients of Urbanized Area Formula (49 U.S.C. 5307) funds in an urbanized area (UZA) with a population of 200,000 or more. Section 360 of the Omnibus Consolidated and Emergency Supplemental Appropriations Act, 1999 (Pub. L. 105–277), amended section 3027(c) of TEA–21 by adding paragraph (3), which allows for an exception to this restriction on operating assistance and provides that FTA may allow certain recipients of section 5307 funds in such areas that provide service for elderly persons and persons with disabilities, with 20 or fewer vehicles, to use a portion of their section 5307 funds for operating assistance. Section 341 of the Fiscal Year (FY) 2001 DOT Appropriations Act (Pub. L. 106–346), subsequently amended section 3027(c)(3) of TEA–21 by increasing the amount of available funding under section 3027(c)(3) of TEA–21 from $1,000,000 to $1,444,000.

Section 176 of the Consolidated Appropriations Act, 2004, further amends section 3027(c)(3) of TEA–21, as amended, for FY 2004. The two principal changes set forth in the language of section 176 are: (1) The number of vehicles an eligible transit provider may operate is 25 or fewer; and (2) the total amount of funding available for assistance to all entities may not exceed $10 million. Previously, only four Texas grantees were eligible; but we believe additional grantees may be eligible under this amendment. All grantees wishing to use section 176, including those previously identified as eligible, must meet the criteria listed below and are asked to send letters of intent to the appropriate FTA Regional Office.

Criteria

The criteria by which FTA will allow eligibility for Federal transit operating assistance under the provisions of section 176 of the Consolidated Appropriations Act, 2004, are as follows:

1. The only transit service the operator provides is demand-responsive service for elderly persons and/or persons with disabilities. Such service does not include service for the general public.
2. The number of demand-responsive vehicles, operated in maximum service, is 25 or fewer.
3. The operator provides the demand-responsive service in a UZA with a population of 200,000 or more.
4. The demand-responsive service provided is not ADA paratransit service complementary to fixed-route service.
5. Neither fixed-route nor ADA-related paratransit service complementary to fixed-route service is provided in the service areas served by the demand-responsive service for which Federal transit operating assistance will be requested.
6. The Metropolitan Planning Organization concurs in the use of operating assistance for a portion of the urbanized area's section 5307 apportionment.

Calculation

After determining a transit provider's eligibility to use section 5307 funds for operating assistance, and taking into account the total amounts of Federal transit operating assistance being requested, FTA will determine the amount for which the recipient is eligible. The grantee/transit operator may not apply for and will not receive more than 50 percent of its net cost for operating expenses for the local fiscal year for which operating assistance is requested.

If the total amount requested by all eligible recipients under section 176 is greater than $10 million, FTA will calculate the amount allowable to each eligible recipient on a pro-rated basis to all of the eligible recipients requesting assistance under section 176.

FTA Grant Application Requirements

All of the normal FTA grant requirements regarding Federal transit operating assistance apply, as described in Appendix D of FTA Circular 9030.1C, ''Urbanized Area Formula Program: Grant Application Instructions,'' dated October 1, 1998. Understanding that amendments to Transportation Improvement Programs (TIP) and State Transportation Improvement Programs (STIP) will have to be made, FTA will not require that the funds be programmed in a TIP before the letter of intent is received. However, use of the funds under section 176 must be programmed in an approved TIP and an approved STIP before FTA can obligate funds.

Letter of Intent

The letter of intent, which must be received by the appropriate FTA Regional Office on or before June 16, 2004, should address the following:

1. Each criterion of eligibility listed.
2. The amount of FY 2004 funds requested for Federal transit operating assistance. Such amount may not be greater than 50 percent of the grant recipient's net cost for operating expenses for the local fiscal year for which operating assistance is requested.

After eligibility and funding determinations have been made, FTA will notify all transit providers/grantees that submitted letters of intent of their eligibility status and the amount of funding they may apply for. Please contact the appropriate FTA Regional Office for additional information or guidance if you intend to make use of this provision.

Issued on: May 11, 2004.

Jennifer L. Dorn,

Administrator.

Appendix A—FTA Regional Offices

Region 1—Boston, Kendall Square, 55 Broadway, Suite 920, Cambridge, MA 02142–1093, Tel. 617 494–2055

Region 2—New York, One Bowling Green, Room 429, New York, NY 10004–1415, Tel. No. 212 668–2170

Region 3—Philadelphia 1760 Market Street, Suite 500, Philadelphia, PA 19103–4124, Tel. 215 656–7100

Region 4—Atlanta, Atlanta Federal Center, Suite 17T50, 61 Forsyth Street SW, Atlanta, GA 30303, Tel. 404 562–3500

Region 5—Chicago, 200 West Adams Street, Suite 320, Chicago, IL 60606, Tel. 312 353–2789

Region 6—Ft. Worth, 819 Taylor Street, Room 8A36, Ft. Worth, TX 76102, Tel. 817 978–0550

Region 7—Kansas City, MO 901 Locust Street, Room 404, Kansas City, MO 64106, Tel. 816 329–3920

Region 8—Denver, Columbine Place, 216 16th Street, Suite 650, Denver, CO 80202–5120, Tel. 303 844–3242

Region 9—San Francisco, 201 Mission Street, Room 2210, San Francisco, CA 94105–1926, Tel. 415 744–3133

Region 10—Seattle, Jackson Federal Building, 915 Second Avenue, Suite 3142, Seattle, WA 98174–1002, Tel. 206 220–7954

[FR Doc. 04–11144 Filed 5–14–04; 8:45 am]

BILLING CODE 4910–57–P

DEPARTMENT OF TRANSPORTATION

Surface Transportation Board

[STB Ex Parte No. 282 (Sub–No. 20)]

Railroad Consolidation Procedures—Exemption for Temporary Trackage Rights

AGENCY: Surface Transportation Board, DoT.

ACTION: Notice; amendment of final decision.

SUMMARY: By decision served on May 23, 2003, the Board amended its rules at 49 CFR part 1180 to adopt a new class exemption for trackage rights proposals that are limited to overhead operations and which expire on a date certain, not to exceed 1 year from the effective date of the exemption. The final rule was published in the **Federal Register** on May 23, 2003, 68 FR 28139–40. In the final decision, the Board stated that approval of temporary trackage rights agreements under 49 U.S.C. 11323 must include the employee protective conditions set forth in *Norfolk and Western Ry. Co.—Trackage Rights—BN,* 354 I.C.C. 605 (1978), as modified by *Mendocino Coast Ry., Inc.—Lease and Operate,* 360 I.C.C. 653 (1980), *aff'd sub nom. Railway Labor Executives' Ass'n* v. *United States,* 675 F.2d 1248 (D.C. Cir. 1982) (*Norfolk and Western* conditions). In accordance with a recent decision of the United States Court of Appeals for the District of Columbia in *United Transportation Union—General Committee of Adjustment (GO–386)* v. *Surface Transportation Board,* 363 F.3d 465 (D.C. Cir. 2004), the Board now amends its final decision to require not only the imposition of the *Norfolk and Western* conditions on the acquisition of temporary trackage rights under the new rule, but also the imposition of the

employee protective conditions set forth in *Oregon Short Line R.R. Co.—Abandonment—Goshen,* 360 I.C.C. 91 (1979), for the discontinuance component of temporary trackage rights authority. The decision will be included in the bound volumes of the STB printed reports at a later date.

DATES: Petitions to reopen must be filed by June 7, 2004.

FOR FURTHER INFORMATION CONTACT: Joseph H. Dettmar, (202) 565–1600. [Assistance for the hearing impaired is available through the Federal Information Relay Service (FIRS) at 1–800–877–8339.]

SUPPLEMENTARY INFORMATION: Additional information is contained in the Board's decision. To purchase a copy of the full decision, write to, call, or pick up in person from: ASAP Document Solutions, 9332 Annapolis Road, Suite 103, Lanham, MD 20706. Telephone: (301) 577–2600. [FIRS for the hearing impaired: 1–800–877–8339.]

Board decisions and notices are available on our Web site at *http://www.stb.dot.gov.*

Decided: May 10, 2004.

By the Board, Chairman Nober.

Vernon A. Williams,

Secretary.

[FR Doc. 04–10972 Filed 5–14–04; 8:45 am]

BILLING CODE 4915–01–P

DEPARTMENT OF THE TREASURY

Internal Revenue Service

Advisory Group to the Internal Revenue Service, Tax Exempt and Government Entities Division (TE/GE); Meeting

AGENCY: Internal Revenue Service (IRS), Treasury.

ACTION: Notice.

SUMMARY: The Advisory Committee on Tax Exempt and Government Entities (ACT) will hold a public meeting on Wednesday, June 9, 2004.

FOR FURTHER INFORMATION, CONTACT: Steven J. Pyrek, Director, Communications and Liaison, 1111 Constitution Ave., NW., SE:T:CL—Penn Bldg, Washington, DC 20224. Telephone: 202–283–9966 (not a toll-free number). E-mail address: *Steve.J.Pyrek@irs.gov.*

SUPPLEMENTARY INFORMATION: By notice herein given, pursuant to section 10(a)(2) of the Federal Advisory Committee Act, 5 U.S.C. App. (1988), a public meeting of the ACT will be held on Wednesday, June 9, 2004, from 9 a.m. to 2 p.m., at the Internal Revenue Service, 1111 Constitution Ave., NW., Room 3313, Washington, DC. Issues to be discussed relate to Employee Plans, Exempt Organizations, and Government Entities.

Reports from four ACT subgroups cover the following topics:

- Barriers to Voluntary Compliance: Governmental Employers' Perspective.
- Indian Tribal Government Guidance Priorities.
- Employee Plans Operational Guidance.
- Audit Cycle Time and Communications: Employee Plans and Tax Exempt Bonds.
- Reviewing IRS Policies and Procedures to Leverage Enforcement: Recommendations to Enhance Exempt Organization's (EO's) Enforcement and Compliance Efforts

Last minute agenda changes may preclude advance notice. Due to limited seating and security requirements, attendees must call Demetrice Bess to confirm their attendance. Ms. Bess can be reached at (202) 283–9954. Attendees are encouraged to arrive at least 30 minutes before the meeting begins to allow sufficient time for security clearance. Picture identification must be presented. Please use the main entrance at 1111 Constitution Ave., NW., to enter the building.

Should you wish the ACT to consider a written statement, please call (202) 283–9966, or write to: Internal Revenue Service, 1111 Constitution Ave., NW., SE:T:CL–Penn Bldg; Washington, DC 20224, or e-mail *Steve.J.Pyrek@irs.gov.*

Dated: May 11, 2004.

Steven J. Pyrek,

Designated Federal Official, Tax Exempt and Government Entities Division.

[FR Doc. 04–11137 Filed 5–14–04; 8:45 am]

BILLING CODE 4830–01–P

DEPARTMENT OF VETERANS AFFAIRS

[OMB Control No. 2900–0619]

Proposed Information Collection Activity: Proposed Collection; Comment Request

AGENCY: Veterans Health Administration, Department of Veterans Affairs.

ACTION: Notice.

SUMMARY: The Veterans Health Administration (VHA), Department of Veterans Affairs (VA), is announcing an opportunity for public comment on the proposed collection of certain information by the agency. Under the Paperwork Reduction Act (PRA) of 1995, Federal agencies are required to publish notice in the **Federal Register** concerning each proposed collection of information, including each proposed extension of a currently approved collection, and allow 60 days for public comment in response to the notice. This notice solicits comments on rapid response to electronic inquiries submitted to VA through the Inquiry Routing and Information System (IRIS).

DATES: Written comments and recommendations on the proposed collection of information should be received on or before July 16, 2004.

ADDRESSES: Submit written comments on the collection of information to Ann W. Bickoff, Veterans Health Administration (19E1), Department of Veterans Affairs, 810 Vermont Avenue, NW., Washington, DC 20420 or e-mail *ann.bickoff@mail.va.gov.* Please refer to ''OMB Control No. 2900–0619'' in any correspondence.

FOR FURTHER INFORMATION CONTACT: Ann W. Bickoff (202) 273–8310 or Fax (202) 273–9381.

SUPPLEMENTARY INFORMATION: Under the PRA of 1995 (Pub. L. 104–13; 44 U.S.C. 3501–3521), Federal agencies must obtain approval from the Office of Management and Budget (OMB) for each collection of information they conduct or sponsor. This request for comment is being made pursuant to Section 3506(c)(2)(A) of the PRA.

With respect to the following collection of information, VHA invites comments on: (1) Whether the proposed collection of information is necessary for the proper performance of VHA's functions, including whether the information will have practical utility; (2) the accuracy of VHA's estimate of the burden of the proposed collection of information; (3) ways to enhance the quality, utility, and clarity of the information to be collected; and (4) ways to minimize the burden of the collection of information on respondents, including through the use of automated collection techniques or the use of other forms of information technology.

Title: Inquiry Routing and Information System (IRIS).

OMB Control Number: 2900–0619.

Type of Review: Extension of a currently approved collection.

Abstract: The World Wide Web is a powerful media for the delivery of information and services to veterans, dependents, and active duty personnel worldwide. IRIS allows a customer to submit questions, complaints, compliments, and suggestions directly to the appropriate office at any time and

receive an answer more quickly than through standard mail. IRIS does not provide applications to veterans or serve as a conduit for patient data, *etc.*

Affected Public: Individuals or Households.

Estimated Annual Burden: 5,000 hours.

Estimated Average Burden Per Respondent: 10 minutes.

Frequency of Response: On occasion.

Estimated Number of Respondents: 30,000.

Dated: May 6, 2004.

By direction of the Secretary.

Loise Russell,

Director, Records Management Service.

[FR Doc. 04–11152 Filed 5–14–04; 8:45 am]

BILLING CODE 8320–01–P

DEPARTMENT OF VETERANS AFFAIRS

[OMB Control No. 2900–0455]

Proposed Information Collection Activity: Proposed Collection; Comment Request

AGENCY: Veterans Benefits Administration, Department of Veterans Affairs.

ACTION: Notice.

SUMMARY: The Veterans Benefits Administration (VBA), Department of Veterans Affairs (VA), is announcing an opportunity for public comment on the proposed collection of certain information by the agency. Under the Paperwork Reduction Act (PRA) of 1995, Federal agencies are required to publish notice in the **Federal Register** concerning each proposed collection of information, including each proposed extension of a currently approved collection, and allow 60 days for public comment in response to the notice. This notice solicits comments for information needed to determine whether proprietary education institutions receiving Federal financial assistance comply with the applicable civil rights law and regulations.

DATES: Written comments and recommendations on the proposed collection of information should be received on or before July 16, 2004.

ADDRESSES: Submit written comments on the collection of information to Nancy J. Kessinger, Veterans Benefits Administration (20M35), Department of Veterans Affairs, 810 Vermont Avenue, NW., Washington, DC 20420 or e-mail: *irmnkess@vba.va.gov.* Please refer to ''OMB Control No. 2900–0455'' in any correspondence.

FOR FURTHER INFORMATION CONTACT: Nancy J. Kessinger at (202) 273–7079 or Fax (202) 275–5947.

SUPPLEMENTARY INFORMATION: Under the PRA of 1995 (Pub. L. 104–13; 44 U.S.C. 3501–3521), Federal agencies must obtain approval from the Office of Management and Budget (OMB) for each collection of information they conduct or sponsor. This request for comment is being made pursuant to Section 3506(c)(2)(A) of the PRA.

With respect to the following collection of information, VBA invites comments on: (1) Whether the proposed collection of information is necessary for the proper performance of VBA's functions, including whether the information will have practical utility; (2) the accuracy of VBA's estimate of the burden of the proposed collection of information; (3) ways to enhance the quality, utility, and clarity of the information to be collected; and (4) ways to minimize the burden of the collection of information on respondents, including through the use of automated collection techniques or the use of other forms of information technology.

Title: Equal Opportunity Compliance Review Report, VA Form 20–8734 and Supplement to Equal Opportunity Compliance Review Report, VA Form 20–8734a.

OMB Control Number: 2900–0455.

Type of Review: Extension of a currently approved collection.

Abstract: Executive Order 12250, Leadership and Coordination of Nondiscrimination Laws, delegated authority to the Attorney General to coordinate the implementation and enforcement by Executive agencies of various equal opportunity laws prohibiting discriminatory practices in Federal programs and programs receiving Federal financial assistance. The Order extended the delegation to cover Title IX of the Education Amendments of 1972, and Section 504 of the Rehabilitation Act of 1973. Department of Justice issued government-wide guidelines (29 CFR 42.406) instructing funding agencies to ''provide for the collection of data and information from applicants for and recipients of Federal assistance.

VA Forms 20–8734 and 20–8734a are used by VA personnel during regularly scheduled educational compliance survey visit, as well as during investigations of equal opportunity complaints, to identify areas where there may be disparate treatment of members of protected groups. VA Form 20–8734 is used to gather information from post-secondary proprietary schools below college level. The information is used to assure that VA-funded programs comply with equal opportunity laws. VA Form 20–8734a, is used to gather information from students and instructors at post-secondary proprietary schools below college level. The information is are used to assure that participants have equal access to equal treatment in VA-funded programs. If this information were not collected, VA would be unable to carry out the civil rights enforcement responsibilities established in the Department of Justice's guidelines and VA's regulations.

Affected Public: Business or other for-profit.

Estimated Annual Burden and Average Burden Per Respondent: Based on past experience, VBA estimates that 76 interviews will be conducted with recipients using VA Form 20–8734 at an average of 1 hour and 45 minutes per interview (133 hours). This includes one hour for an interview with the principal facility official, plus 45 minutes for reviewing records and reports and touring the facility. It is estimated that 76 interviews will be conducted with students using VA Form 20–8734a at an average of 30 minutes per interview (38 hours) and with instructors at an average of 30 minutes per interview (38 hours). Interviews are also conducted with 76 students without instructors at an average time of 30 minutes (38 hours). The total burden hour is 247.

Frequency of Response: On occasion.

Estimated Number of Respondents: 228.

Dated: May 6, 2004.

By direction of the Secretary.

Loise Russell,

Director, Records Management Service.

[FR Doc. 04–11153 Filed 5–14–04; 8:45 am]

BILLING CODE 8320–01–P

DEPARTMENT OF VETERANS AFFAIRS

[OMB Control No. 2900–0212]

Proposed Information Collection Activity: Proposed Collection; Comment Request

AGENCY: Veterans Benefits Administration, Department of Veterans Affairs.

ACTION: Notice.

SUMMARY: The Veterans Benefits Administration (VBA), Department of Veterans Affairs (VA), is announcing an opportunity for public comment on the proposed collection of certain information by the agency. Under the

Paperwork Reduction Act (PRA) of 1995, Federal agencies are required to publish notice in the **Federal Register** concerning each proposed collection of information, including each proposed extension of a currently approved collection, and allow 60 days for public comment in response to this notice. This notice solicits comments for information needed to decline Veterans Mortgage Life Insurance.

DATES: Written comments and recommendations on the proposed collection of information should be received on or before July 16, 2004.

ADDRESSES: Submit written comments on the collection of information to Nancy J. Kessinger, Veterans Benefits Administration (20M35), Department of Veterans Affairs, 810 Vermont Avenue, NW., Washington, DC 20420 or e-mail *irmnkess@vba.va.gov.* Please refer to ''OMB Control No. 2900–0212'' in any correspondence.

FOR FURTHER INFORMATION CONTACT: Nancy J. Kessinger at (202) 273–7079 or Fax (202) 275–5947.

SUPPLEMENTARY INFORMATION: Under the PRA of 1995 (Pub. L. 104–13; 44 U.S.C. 3501–3521), Federal agencies must obtain approval from the Office of Management and Budget (OMB) for each collection of information they conduct or sponsor. This request for comment is being made pursuant to Section 3506(c)(2)(A) of the PRA.

With respect to the following collection of information, VBA invites comments on: (1) Whether the proposed collection of information is necessary for the proper performance of VBA's functions, including whether the information will have practical utility; (2) the accuracy of VBA's estimate of the burden of the proposed collection of information; (3) ways to enhance the quality, utility, and clarity of the information to be collected; and (4) ways to minimize the burden of the collection of information on respondents, including through the use of automated collection techniques or the use of other forms of information technology.

Title: Veterans Mortgage Life Insurance Statement, VA Form 29–8636.

OMB Control Number: 2900–0212.

Type of Review: Extension of a currently approved collection.

Abstract: VA Form 29–8636 is completed by veterans to decline Veterans Mortgage Life Insurance (VMLI) or to provide information upon which the insurance premium can be based. VMLI provides financial protection to cover an eligible veteran's outstanding home mortgage in the event of his or her death. The insurance is available only to disabled veterans who, because of their disability, have received a specially adapted housing grant from VA.

Affected Public: Individuals or households.

Estimated Annual Burden: 113 hours.

Estimated Average Burden Per Respondent: 15 minutes.

Frequency of Response: On occasion.

Estimated Number of Respondents: 450.

Dated: May 6, 2004.

Loise Russell,

Director, Records Management Service.

[FR Doc. 04–11154 Filed 5–14–04; 8:45 am]

BILLING CODE 8320–01–P

DEPARTMENT OF VETERANS AFFAIRS

[OMB Control No. 2900–0539]

Proposed Information Collection Activity: Proposed Collection; Comment Request

AGENCY: Veterans Benefits Administration, Department of Veterans Affairs.

ACTION: Notice.

SUMMARY: The Veterans Benefits Administration (VBA), Department of Veterans Affairs (VA), is announcing an opportunity for public comment on the proposed collection of certain information by the agency. Under the Paperwork Reduction Act (PRA) of 1995, Federal agencies are required to publish notice in the **Federal Register** concerning each proposed collection of information, including each proposed extension of a currently approved collection, and allow 60 days for public comment in response to the notice. This notice solicits comments for information needed to determine a claimant's eligibility for disability insurance.

DATES: Written comments and recommendations on the proposed collection of information should be received on or before July 16, 2004.

ADDRESSES: Submit written comments on the collection of information to Nancy J. Kessinger, Veterans Benefits Administration (20M35), Department of Veterans Affairs, 810 Vermont Avenue, NW., Washington, DC 20420 or e-mail *irmnkess@vba.va.gov.* Please refer to ''OMB Control No. 2900–0539'' in any correspondence.

FOR FURTHER INFORMATION CONTACT: Nancy J. Kessinger at (202) 273–7079 or Fax (202) 275–5947.

SUPPLEMENTARY INFORMATION: Under the PRA of 1995 (Pub. L. 104–13; 44 U.S.C. 3501–3521), Federal agencies must obtain approval from the Office of Management and Budget (OMB) for each collection of information they conduct or sponsor. This request for comment is being made pursuant to Section 3506(c)(2)(A) of the PRA.

With respect to the following collection of information, VBA invites comments on: (1) Whether the proposed collection of information is necessary for the proper performance of VBA's functions, including whether the information will have practical utility; (2) the accuracy of VBA's estimate of the burden of the proposed collection of information; (3) ways to enhance the quality, utility, and clarity of the information to be collected; and (4) ways to minimize the burden of the collection of information on respondents, including through the use of automated collection techniques or the use of other forms of information technology.

Title: Application for Supplemental Service Disabled Veterans Insurance, (RH) Life Insurance, VA Forms 29–0188, 29–0189 and 29–0190.

OMB Control Number: 2900–0539.

Type of Review: Extension of a currently approved collection.

Abstract: VA Forms 29–0188, 29–0189 and 29–0190 are completed by veterans applying for Supplemental Service Disabled Veterans Insurance. VA uses the information collected to establish a veteran's eligibility for insurance coverage.

Affected Public: Individuals or households.

Estimated Annual Burden: 3,333 hours.

Estimated Average Burden Per Respondent: 20 minutes.

Frequency of Response: On occasion.

Estimated Number of Respondents: 10,000.

Dated: May 6, 2004.

By direction of the Secretary.

Loise Russell,

Director, Records Management Service.

[FR Doc. 04–11155 Filed 5–14–04; 8:45 am]

BILLING CODE 8320–01–P

Federal Register

Monday,
May 17, 2004

Part II

Department of Housing and Urban Development

Funding for Fiscal Year 2003: Capacity Building for Community Development and Affordable Housing; Notice

DEPARTMENT OF HOUSING AND URBAN DEVELOPMENT

[Docket No. FR–4864–N–01]

Funding for Fiscal Year 2003: Capacity Building for Community Development and Affordable Housing

AGENCY: Office of the Assistant Secretary for Community Planning and Development, HUD.

ACTION: Notice.

SUMMARY: The Consolidated Appropriations Resolution, 2003, makes available approximately $34.3 million in Fiscal Year (FY) 2003 funds for capacity building activities authorized in section 4 of the HUD Demonstration Act of 1993. Section 4 authorizes the Secretary to establish by notice such requirements as may be necessary to carry out its provisions. This notice establishes the requirements for use of the FY2003 funds and takes effect upon issuance.

FOR FURTHER INFORMATION CONTACT: Karen Williams, Office of Community Planning and Development, Department of Housing and Urban Development, 1835 Assembly Street, Columbia, SC 29201–2480; telephone number (803) 253–3009. Persons with hearing or speech impairments may access this number through TTY by calling the Federal Information Relay Service at 800–877–8339 or by calling (202) 708–2565. Except for the ''800'' number, these are not toll-free telephone numbers.

SUPPLEMENTARY INFORMATION:

1. Authority

The Consolidated Appropriations Resolution, 2003 (Pub. L. 108–7, approved February 20, 2003) (FY2003 Appropriations Resolution) appropriates approximately $34.3 million for capacity building for community development and affordable housing as authorized by section 4 of the HUD Demonstration Act of 1993 (42 U.S.C. 9816 note). These funds are subject to the provision in Title VI, section 601 of the FY2003 Appropriations Resolution that requires an across-the-board rescission of 0.65 percent. Therefore, a total of $34,275,750 is available to be allocated this fiscal year. HUD will provide this assistance through the Enterprise Foundation (Enterprise), the Local Initiatives Support Corporation (LISC), Habitat for Humanity, and YouthBuild USA ''to develop the capacity and ability of community development corporations and community housing development organizations to undertake community development and affordable housing projects and programs.''

2. Background

Beginning in FY1994, HUD provided funding to Enterprise and LISC through the National Community Development Initiative (NCDI), as authorized by section 4 of the HUD Demonstration Act of 1993. In accordance with authorizing statutes, HUD divided the appropriations equally between Enterprise and LISC. HUD published a notice in the **Federal Register** of March 30, 1994 (59 FR 14988), which set forth the requirements for receipt of these funds.

In subsequent years, pursuant to the various appropriations acts, funding was made available to Enterprise, LISC, Habitat for Humanity, and YouthBuild USA. In each of these years, HUD published a notice in the **Federal Register** that contained requirements for the funds that were made available to LISC, Enterprise, Habitat for Humanity, and YouthBuild USA.

Today's notice establishes requirements for the use of the FY2003 funds. These funds may be used for new activities or, in the case of Enterprise and LISC, to continue NCDI activities that received funding under the notice dated March 30, 1994 (59 FR 14988). New grant agreements will be executed to govern these NCDI activities.

3. Allocation and Form of Awards

Of the FY2003 funds appropriated for section 4 activities, $28.25 million is made available in equal shares to Enterprise Foundation and LISC for activities authorized by section 4, as in effect immediately before June 12, 1997. The funds are to be used for capacity building for community development and affordable housing. In addition, $4.25 million is appropriated to Habitat for Humanity and $2 million to YouthBuild USA for section 4 activities. Each organization will match the HUD assistance with resources from private sources in an amount equal to three times its share, as required by section 4. Enterprise and LISC each will use at least $2.5 million of their $14.125 million share for activities in rural areas, including tribal areas. As stated above, these funds are subject to the 0.65 percent rescission provision in the FY2003 Appropriations Resolution. Therefore, a total of $34,275,750 is available to be allocated, with LISC and Enterprise Foundation each receiving $14,033,187, Habitat for Humanity receiving $4,222,375, and YouthBuild USA receiving $1,987,000.

This notice will take effect upon issuance.

4. Eligible Activities

Eligible activities under this award include:

(a) training, education, support, and advice to enhance the technical and administrative capabilities of community development corporations (CDCs) and community housing development organizations (CHDOs), including the capacity to participate in consolidated planning, as well as in fair housing planning, continuum of care homeless assistance efforts, and HUD's Colonias Initiatives that help ensure communitywide participation in assessing area needs; consulting broadly within the community; planning cooperatively for the use of available resources in a comprehensive and holistic manner; and assisting in evaluating performance under these community efforts and in linking plans with neighboring communities to foster regional planning;

(b) loans, grants, development assistance, predevelopment assistance, or other financial assistance to CDCs/CHDOs to carry out community development and affordable housing activities that benefit low-income families and persons, including the acquisition, construction, or rehabilitation of housing for low-income families and persons, and community and economic development activities that create jobs for low-income persons; and

(c) such other activities as may be determined by Enterprise, LISC, Habitat for Humanity, or YouthBuild USA in consultation with the Secretary or the Secretary's designee.

5. Matching Requirements

As required by section 4 of the HUD Demonstration Act of 1993, the $34.5 million appropriation, as reduced by the rescission of 0.65 percent to $34,275,750, is subject to each award dollar being matched by $3 in cash or in-kind contributions to be obtained from private sources. Each of the organizations receiving these funds will document its proportionate share of matching resources, including resources committed directly or by a third party to a grantee or subgrantee after February 20, 2003, to conduct activities.

In-kind contributions shall conform to the requirements of 24 CFR 84.23.

6. Administrative and Other Requirements

Each award will be governed by 24 CFR part 84 (Uniform Administrative Requirements), OMB Circular A–122 (Cost Principles for Nonprofit Organizations), and OMB Circular A–

133 (Audits of states, local governments, and Non-Profit Organizations). Other requirements will be detailed in the terms and conditions of the grant agreement provided to grantees, including the following:

(a) Each grantee will submit to HUD a specific work and funding plan for each community, showing when and how the federal funds will be used. The work plan must be sufficiently detailed for monitoring purposes and must identify the performance goals and objectives to be achieved. Within 30 days after submission of a specific work plan, HUD will approve the work plan or notify the grantee of matters that need to be addressed prior to approval, or the work plan shall be construed to be approved. Work plans may be developed for less than the full dollar amount and term of the award, but no HUD-funded costs may be incurred for any activity until the work plan is approved by HUD. All activities also are subject to the environmental requirements in paragraph 6(f) of this notice.

(b) Each grantee shall submit to HUD an annual performance report due 90 days after the end of each calendar year, with the first report due on March 31, 2004. Performance reports shall include reports on both performance and financial progress under work plans and shall include reports on the commitment and expenditure of private matching resources utilized through the end of the reporting period. Reports shall conform to the reporting requirements of 24 CFR part 84. Additional information or increased frequency of reporting, not to exceed twice a year, may be required by HUD any time during the grant agreement, if HUD finds such reporting to be necessary for monitoring purposes.

To further the consultation process and share the results of progress to date, the Secretary may require grantees to present and discuss their performance reports at annual meetings in Washington, DC, during the life of the award.

(c) The performance reports must contain the information required under 24 CFR part 84, including a comparison of actual accomplishments with the objectives and performance goals of the work plans. In the work plans, each grantee will identify performance goals and objectives established for each community in which it proposes to work and appropriate measurements, such as the number of housing units and facilities each CDC/CHDO produces annually during the grant period and the average cost of those units. However, when the activity described in a work plan is to be undertaken in more than one community, a report indicating the areas in which the activity will be undertaken, along with appropriate goals and objectives, must be provided when that information is available. The performance reports also must include a discussion of the reasonableness of the unit costs, the reasons for slippage if established objectives and goals are not met, and additional pertinent information.

(d) A final performance report, in the form described in paragraph (c) above, shall be provided to HUD by each grantee within 90 days after the completion date of the award.

(e) Financial status reports (SF–269A) shall be submitted semiannually.

(f) Individual projects to be funded by these grants may not be known at the time the overall grants are awarded and also may not be known when some of the individual subgrants are made. Therefore, in accordance with 24 CFR 50.3(h), the application and the grant agreement must provide that the recipient will:

(1) Supply HUD with all available, relevant information necessary for HUD to perform for each property any environmental review required by this part;

(2) Carry out mitigating measures required by HUD or select alternate eligible property; and

(3) Not acquire, rehabilitate, convert, lease, repair or construct property, nor commit or expend HUD or local funds for these program activities with respect to any eligible property, until HUD approval of the property is received.

7. Application Content

Applicants will be required to file an application containing the following:

(a) Application for Federal Assistance (SF 424), Non-construction Assurances Form (SF–424B), Certification Regarding Drug-Free Workplace Requirements, Certification Regarding Lobbying, and the Fair Housing and Equal Opportunity certification described in section 8(f) of this notice;

(b) A Summary Budget for the amount of funds being requested and a similar summary budget for any amounts to be committed to NCDI activities, each identifying costs for implementing the plan of suggested technical assistance (TA) activities by cost category, including:

(1) direct labor by position or individual, indicating the estimated hours per position, the rate per hour, the estimated cost per staff position, and the total estimated direct labor costs;

(2) fringe benefits by staff position, identifying the rate, the salary base on which the rate was computed, the estimated cost per position, and the total estimated fringe benefit cost;

(3) material costs, indicating the item, quantity, unit cost per item, estimated cost per item, and the total estimated material costs;

(4) transportation costs, if applicable;

(5) equipment charges, if any, identifying each type of equipment, its quantity and unit cost, and total estimated equipment costs;

(6) consultant costs, if applicable, indicating the type, estimated number of consultant days, rate per day, total estimated consultant costs per consultant, and total estimated costs for all consultants;

(7) subcontract costs, if applicable, indicating each individual subcontract and amount;

(8) other direct costs listed by item, quantity, unit cost, total for each item listed, and total other direct costs for the award; and

(9) indirect costs, identifying the type, approved indirect cost rate, base to which the rate applies, and total indirect costs.

These line items should total the amount requested for each Community Development technical assistance (CD–TA) program area. The grand total of all CD–TA program funds requested should reflect the grand total of all funds for which application is made.

8. Findings and Certifications

(a) *Environmental Impact.* A Finding of No Significant Impact with respect to the environment has been made in accordance with the Department's regulations at 24 CFR part 50, which implement section 102(2)(C) of the National Environmental Policy Act of 1969 (42 U.S.C. 4332). The Finding of No Significant Impact is available for public inspection between 8 a.m. and 5 p.m. weekdays in the Regulations Division, Office of the General Counsel, Room 10276, Department of Housing and Urban Development, 451 Seventh Street, SW, Washington, DC 20410–0500.

(b) *Wage Rates.* Unless triggered by other federal funds for a project under this grant, the requirements of the Davis-Bacon Act (40 U.S.C. 276) do not apply.

(c) *Relocation.* The Uniform Relocation Assistance and Real Property Acquisition Policies Act of 1979 (42 U.S.C. 4601–4655) and implementing regulations at 49 CFR part 24 apply to anyone who is displaced as a result of acquisition, rehabilitation, or demolition for a HUD-assisted activity.

(d) *Federalism.* Executive Order 13132 (entitled ''Federalism'') prohibits

an agency from promulgating policies that have federalism implications if the policies either impose substantial direct compliance costs on state and local governments and are not required by statute, or the policies preempt state law, unless the agency meets the consultation and funding requirements of section 6 of the Executive Order. This notice does not have federalism implications and does not impose substantial direct compliance costs on state and local governments nor preempt state law within the meaning of the Executive Order.

(e) *Prohibition Against Lobbying Activities.* Applicants for funding under this notice are subject to the provisions of section 319 of the Department of Interior and Related Agencies Appropriation Act for Fiscal Year 1991, 31 U.S.C. 1352 (the Byrd Amendment) and to the provisions of the Lobbying Disclosure Act of 1995 (2 U.S.C. 1601 *et seq.*).

The Byrd Amendment, which is implemented in regulations at 24 CFR part 87, prohibits applicants for federal contracts and grants from using appropriated funds to attempt to influence federal executive or legislative officers or employees in connection with obtaining such assistance or with its extension, continuation, renewal, amendment, or modification. The Byrd Amendment applies to the funds that are the subject of this notice. Therefore, applicants must file with their application a certification stating that they have not made and will not make any prohibited payments and, if any payments or agreement to make payments of nonappropriated funds for these purposes has been made, a form SF–LLL disclosing such payments must be submitted.

The Lobbying Disclosure Act of 1995, which repealed section 112 of the HUD Reform Act and resulted in the elimination of the regulations at 24 CFR part 86, requires all persons and entities that lobby covered Executive or Legislative Branch officials to register with the Secretary of the Senate and the Clerk of the House of Representatives and file reports concerning their lobbying activities.

(f) *Fair Housing and Equal Opportunity Threshold Requirements.*

(i) *Compliance with Fair Housing and Civil Rights Laws.* Each organization receiving a grant under this notice and its subgrantees must comply with all fair housing and civil rights laws, statutes, regulations, and executive orders as enumerated in 24 CFR 5.105(a). Federally recognized Indian tribes must comply with the nondiscrimination provisions enumerated at 24 CFR 1003.601.

If an entity that receives funding under this notice —

Has been charged with a systemic violation of the Fair Housing Act by the Secretary alleging ongoing discrimination,

Is a defendant in a Fair Housing Act lawsuit filed by the Department of Justice alleging an ongoing pattern or practice of discrimination, or

Has received a letter of noncompliance findings under Title VI of the Civil Rights Act of 1964, Section 504 of the Rehabilitation Act of 1973, or Section 109 of the Housing and Community Development Act of 1974—

HUD will determine whether the charge, lawsuit, or letter of findings has been resolved to the satisfaction of the Department and, if not, will take appropriate action. HUD's decision regarding whether a charge, lawsuit, or a letter of findings has been satisfactorily resolved will be based upon whether appropriate actions have been taken to address allegations of ongoing discrimination in the policies or practices involved in the charge, lawsuit, or letter of findings.

Examples of actions that may be taken prior to the application deadline to resolve the charge, lawsuit, or letter of findings include, but are not limited to:

(A) A voluntary compliance agreement signed by all parties in response to the letter of findings;

(B) A HUD-approved conciliation agreement signed by all parties;

(C) A consent order or consent decree; or

(D) A judicial ruling or a HUD Administrative Law Judge's decision that exonerates the respondent of any allegations of discrimination.

(ii) *Nondiscrimination Requirements.* Each organization receiving a grant under this notice and its subgrantees also must comply with the Americans with Disabilities Act of 1990 (42 U.S.C. 1201 *et seq.*), and Title IX of the Education Amendments Act of 1972 (20 U.S.C. 1681 *et seq.*).

(iii) *Affirmatively Furthering Fair Housing.* Each organization receiving a grant under this notice and each of its subgrantees has a duty to affirmatively further fair housing. Each organization and subgrantee should include in its application or work plan the specific steps that it will take to remedy discrimination in housing and to promote fair housing rights and fair housing choice.

(g) *Lead-Based Paint Provisions.* Each organization receiving a grant under this notice and its subgrantees must comply with the applicable lead-based paint provisions of 24 CFR part 35, including subparts J and K.

(h) *Certification.* Applications must contain a certification that the organization receiving a grant under this notice and all subgrantees will comply with:

(1) All the requirements and authorities identified in section 8(f) of this notice;

(2) Section 3 of the Housing and Urban Development Act of 1968 (12 U.S.C. 1701u); and

(3) HUD's implementing regulations at 24 CFR part 135, which require that, to the greatest extent feasible, opportunities for training and employment be given to low-2 income persons residing within the unit of local government for the metropolitan area (or nonmetropolitan county) in which the project is located.

Authority: Section 4 of the HUD Demonstration Act of 1993 42 U.S.C. 9816 note) and the Consolidated Appropriations Resolution, 2003, Pub. L. 108–7, 117 Stat. 550, approved February 20, 2003.

Dated: April 30, 2004.

Roy A. Bernardi,

Assistant Secretary for Community Planning and Development.

[FR Doc. 04–10923 Filed 5–14–04; 8:45 am]

BILLING CODE 4210–29–P

Federal Register

Monday,
May 17, 2004

Part III

Department of Transportation

Federal Aviation Administration

14 CFR Part 121

Antidrug and Alcohol Misuse Prevention Programs for Personnel Engaged in Specified Aviation Activities; Proposed Rule

DEPARTMENT OF TRANSPORTATION

Federal Aviation Administration

14 CFR Part 121

[Docket No. FAA–2002–11301; Notice No. 04–08]

RIN 2120–AH14

Antidrug and Alcohol Misuse Prevention Programs for Personnel Engaged in Specified Aviation Activities

AGENCY: Federal Aviation Administration, DOT.

ACTION: Supplemental notice of proposed rulemaking (SNPRM).

SUMMARY: In Notice 02–04, published on February 28, 2002, the FAA proposed to make it clear that each person who performs a safety-sensitive function directly or by contract (including by subcontract at any tier) for an employer is subject to drug and alcohol testing. The comment period closed on July 29, 2002. Several commenters stated that the change was more than clarifying and would have an economic impact. The FAA has prepared an initial regulatory evaluation on this issue. The FAA is reopening the issue for public comment before making a final determination.

DATES: Send your comments on or before August 16, 2004.

ADDRESSES: Address your comments to the Docket Management System, U.S. Department of Transportation, Room PL 401, 400 Seventh Street, NW., Washington, DC 20590–0001. You must identify the docket number FAA–2002–11301 at the beginning of your comments, and you should submit two copies of your comments. If you wish to receive confirmation that FAA has received your comments, include a self-addressed, stamped postcard.

You may also submit comments through the Internet to: *http://dms.dot.gov.* You may review the public docket containing comments to these proposed regulations in person in the Docket Office between 9 a.m. and 5 p.m., on the plaza level of the Nassif Building at the Department of Transportation at the above address. Also, you may review public dockets on the Internet at *http://dms.dot.gov.*

FOR FURTHER INFORMATION CONTACT: Diane J. Wood, Manager, AAM–800, Drug Abatement Division, Office of Aerospace Medicine, Federal Aviation Administration, 800 Independence Avenue, SW., Washington, DC 20591, telephone number (202) 267–8442.

SUPPLEMENTARY INFORMATION:

Comments Invited

The FAA invites interested persons to participate in this rulemaking by submitting written comments, data, or views. We also invite comments relating to the economic, environmental, energy, or federalism impacts that might result from adopting the proposals in this document. The most helpful comments reference a specific portion of the proposal, explain the reason for any recommended change, and include supporting data. We ask that you send us two copies of written comments.

We will file in the docket all comments we receive, as well as a report summarizing each substantive public contact with FAA personnel concerning this proposed rulemaking. The docket is available for public inspection before and after the comment closing date. If you wish to review the docket in person, go to the address in the **ADDRESSES** section of this preamble between 9 a.m. and 5 p.m., Monday through Friday, except Federal holidays. You may also review the docket using the Internet at the Web address in the **ADDRESSES** section.

Before acting on this proposal, we will consider all comments we receive on or before the closing date for comments. We will consider comments filed late if it is possible to do so without incurring expense or delay. We may change this proposal in light of the comments we receive.

If you want the FAA to acknowledge receipt of your comments on this proposal, include with your comments a pre-addressed, stamped postcard on which the docket number appears. We will stamp the date on the postcard and mail it to you.

Availability of Rulemaking Documents

You can get an electronic copy using the Internet by taking the following steps:

(1) Go to the search function of the Department of Transportation's electronic Docket Management System (DMS) Web page *(http://dms.dot.gov/search).*

(2) On the search page type in the last four digits of the Docket number shown at the beginning of this notice. Click on ''search.''

(3) On the next page, which contains the Docket summary information for the Docket you selected, click on the document number for the item you wish to view.

You can also get an electronic copy using the Internet through the Office of Rulemaking's Web page at *http://www.faa.gov/avr/armhome.htm* or the **Federal Register's** Web page at *http://www.access.gpo.gov/su_docs/aces/aces140.html.*

You can also get a copy by submitting a request to the Federal Aviation Administration, Office of Rulemaking, ARM–1, 800 Independence Avenue, SW., Washington, DC 20591, or by calling (202) 267–9680. Make sure to identify the docket number, notice number or amendment number of this rulemaking.

Background

SNPRM General Information

On February 28, 2002, the FAA published in the **Federal Register** a Notice of Proposed Rulemaking (NPRM), Notice 02–04, entitled Antidrug and Alcohol Misuse Prevention Programs for Personnel Engaged in Specified Aviation Activities (67 FR 9366). The purpose of Notice 02–04 was to clarify regulatory language, increase consistency between the antidrug and alcohol misuse prevention program regulations where possible, and revise regulatory provisions as appropriate.

In Notice 02–04, the FAA proposed to make it clear that each person who performs a safety-sensitive function directly or by contract (including by subcontract at any tier) for an employer is subject to testing. Several commenters indicated that the proposed clarification would impose an economic burden on the aviation industry. Therefore, the FAA is reopening the issue for public comment. We are proposing the same language again in this Supplemental Notice of Proposed Rulemaking (SNPRM).

This SNPRM does not reopen the other proposals that were contained in Notice 02–04 or request further comments on those proposals. Those proposals, amended as appropriate in response to public comment, were published in a final rule on January 12, 2004 (69 FR 1840).

Subcontractor Issue Discussion

In Notice 02–04, the FAA proposed to amend the language in 14 CFR part 121, appendix I, section III and appendix J, section II to make it clear that any contractor's employee who performs safety-sensitive work for an employer must be drug and alcohol tested. Currently, both sections specify that employees performing a listed safety-sensitive function are required to be tested if performing the function ''directly or by contract for an employer.'' The change proposed in Notice 02–04 was to add the following parenthetical phrase after the word ''contract,'' so that it would be clear that

each person who performs a safety-sensitive function directly or by contract (including by subcontract at any tier) for an employer is subject to testing. In this SNPRM, we are proposing the same language as in Notice 02–04.

While the regulations have always required that any person actually performing a safety-sensitive function be tested, the FAA provided conflicting guidance on this point in the past. As discussed in Notice 02–04 (67 FR 9369 to 9370), in the initial implementation phase of the drug testing rule in 1989, the FAA issued informal guidance stating that maintenance subcontractors would not be required to test unless they took airworthiness responsibility for the work that they were performing. This guidance was provided widely to persons and companies in 1989 through 1990, and on an ad hoc basis thereafter until the mid 1990s. This guidance constricted the potential reach of the plain language of the regulation as it applied to contractors. The FAA believes that constricting the scope of testing of contractors is in conflict with the objective of having each person who performs a safety-sensitive function actually tested.

However, the FAA acknowledges that some employers and some maintenance providers may be confused about testing employees performing work under a subcontract. Therefore, in Notice 02–04 and again in this SNPRM, the FAA has proposed to make it clear that all persons performing safety-sensitive work must be tested. The level of contractual relationship with an employer should not be read as a limitation on the requirement that all safety-sensitive work be performed by drug- and alcohol-free employees.

The FAA will rescind all conflicting informal guidance regarding subcontractors upon publication of the final rule on this issue.

Comments Received

The comment period for Notice 02–04 was scheduled to close May 29, 2002, but was extended until July 29, 2002 (67 FR 37361) as a result of public requests for extension. In Notice 02–04, the FAA proposed to make it clear that each person who performs a safety-sensitive function is subject to testing. The FAA received approximately 10 comments on the subcontractor issue. Several commenters, including the Air Transport Association of America (ATA), National Air Transportation Association (NATA), Regional Airline Association (RAA), and a joint filing by the Aeronautical Repair Station Association and 14 other entities (hereinafter referred to as ''ARSA''), indicated that the proposed clarification would impose an economic burden on the aviation industry. Therefore, the FAA is reopening the issue for public comment. The FAA is focusing its comment discussion solely on the subcontractor testing issue because all other issues were resolved in the final rule published on January 12, 2004.

ARSA, with a supporting general comment from NATA, strongly opposed the proposal to test non-certificated maintenance subcontractors, which it believed would expand the scope of drug and alcohol testing to non-aviation employees without enhancing safety. ARSA believed the proposed rule would impose significant new costs on companies that are not regulated by the FAA and on certificated entities that are in full compliance with current regulations. In addition, ARSA commented that the proposal did not adequately consider the costs and benefits as required by Executive Order 12866 or the impact on small entities under the Regulatory Flexibility Act of 1980. According to ARSA, the proposal would increase the costs of aviation maintenance at a time when the industry can least afford it and create an incentive for non-aviation companies to withdraw their support from the industry.

Several commenters, including ARSA, ATA, RAA, and United Technologies Corporation (UTC), stated that the FAA issued conflicting guidance regarding the testing of subcontractors. The commenters reiterated much of the conflicting guidance we cited in Notice 02–04. Some commenters added that confusion further ensued as a result of Advisory Circular (AC) 121–30, *Guidelines for Developing an Anti-Drug Plan for Aviation Personnel,* issued March 16, 1989. This AC was cancelled May 20, 1994.

The FAA acknowledges the concerns of commenters regarding the confusion that ensued from multiple FAA guidance documents on testing subcontractors. It is because of this conflicting guidance that we have proposed clarifying language regarding the subcontractor issue. Because the FAA merely considered this a clarification, the issue was not included in the Regulatory Evaluation for Notice 02–04. In response to the comments and concerns regarding the subcontractor issue and potential costs, the FAA has now prepared a draft Regulatory Evaluation for this SNPRM. For a discussion of the cost comments, see the draft Regulatory Evaluation that is included in the docket for this rulemaking (Docket No. FAA–2002–11301).

We are publishing this SNPRM to gather public comment on the FAA's economic analysis and proposed change, in order to fully evaluate this issue before making a final decision.

In its objections to the proposed clarification, ARSA cited the Omnibus Transportation Employees Testing Act of 1991 (Omnibus Act), 49 U.S.C. 45101, *et seq.* ARSA believes that the Omnibus Act limits the category of persons subject to testing to only air carrier employees and possibly direct contractors. ARSA states extending the coverage to subcontractors ''is far more tenuous.'' In support of its concerns, ARSA also cites Senate Report No. 102–54, 1991, which encouraged the FAA Administrator to ''be very selective in extending the coverage of this provision to other categories of air carrier employees.'' In its comments the ATA stated that ''because the regulation technically *can* reach every single person who falls within the covered function definition, does not mean that every such person *should* be included.''

In reviewing the language of the Omnibus Act, as well as the legislative history, the FAA finds much support for the coverage of individuals performing safety-sensitive functions without regard to the degree of contractual relationships. In the Omnibus Act, Congress acknowledged that the FAA already had regulations requiring the testing of air carrier employees performing directly or by contract, and the Omnibus Act ''does not prevent the Administrator from continuing in effect, amending, or further supplementing a regulation prescribed before October 28, 1991, governing the use of alcohol or a controlled substance by airmen, crewmembers, airport screening employees, air carrier employees responsible for safety-sensitive functions (as decided by the Administrator) * * *.'' 49 U.S.C. 45106(c) Congress was referring to 14 CFR part 121, appendix I, which clearly included in the description of safety-sensitive personnel any individual who was performing directly or by contract for an air carrier. Among the air carrier employees responsible for safety-sensitive functions are those individuals who perform aircraft maintenance and preventive maintenance. In Senate Report No. 102–54, which was cited by ARSA, the Senate Committee on Commerce, Science, and Transportation, specifically indicated that the new statute would continue to require testing of mechanics.

At one time, many of the individuals who performed safety-sensitive functions were direct employees of the air carriers themselves. However, the

trend in aviation has been to contract out many functions, including the maintenance and preventive maintenance of aircraft. According to a report of the Inspector General (IG) of the United States Department of Transportation, there has been a significant increase in air carriers' use of repair stations for outsourced aircraft maintenance. The IG cautioned the FAA ''to pay close attention to the level of oversight it provides for repair stations.'' The IG further advised the FAA ''to consider this shift in maintenance practices when planning its safety surveillance work.'' (See pages 7 and 18 of The State of the Federal Aviation Administration, Statement of the Honorable Kenneth M. Mead, Inspector General, appearing before the Committee on Commerce, Science, and Transportation, United States Senate, Report No. CC–2003–068, February 11, 2003.) In addition, the IG noted on page 1 of a report entitled ''Review of Air Carriers' Use of Aircraft Repair Stations,'' (IG Report No. AV–2003–047, July 8, 2003,) that ''in 1996 major air carriers spent $1.5 billion (37 percent of their total maintenance costs) for outsourced aircraft maintenance. However, in 2002, the major carriers outsourced $2.5 billion (47 percent of their total maintenance costs) in maintenance work.'' The July 8, 2003, report indicated that between 1996 and 2002, U.S. carriers experienced accidents and incidents that have been tied to improper maintenance or maintenance mistakes.

Thus, the FAA believes that it has the statutory authority and, in the interest of aviation safety, the responsibility to require that individuals who actually perform safety-sensitive duties are subject to drug and alcohol testing. In providing FAA the authority to ''further supplement'' the regulations that existed in 1991, Congress empowered the FAA to amend and adapt the regulations as appropriate.

Several commenters, including ARSA, believe that non-certificated maintenance contractors are not authorized to have drug and alcohol testing programs of their own. This is incorrect. Since the beginning of the programs, certificated and non-certificated contractors have been allowed, but not required, to submit and implement antidrug programs under 14 CFR Part 121, appendix I, formerly sections IX.A.3–4, now sections IX, A and IX.C.2; and alcohol misuse prevention programs under 14 CFR part 121, appendix J, formerly section VII.A.2, now section VII.A and section VII.C.2. In fact, recently the FAA's drug and alcohol testing program plan database included 1,207 drug plans approved for non-certificated entities. The majority of non-certificated entities, approximately 1,188 companies, perform safety-sensitive maintenance work.

In addition, the FAA notes that the certificated and non-certificated entities that currently have FAA drug and alcohol testing programs have not identified themselves specifically as prime contractors or as subcontractors. These entities may be working as a prime contractor for one air carrier and as a subcontractor for another air carrier. Therefore, it would not be practical to limit testing to only prime contractors.

ARSA stated that the FAA's proposal, if adopted, would impose significant administrative burdens on air carriers and repair stations in at least two areas. The first is the burden of adding subcontractors to the quality auditing process. ARSA noted that in the airline industry, air carriers periodically audit their direct maintenance providers or accomplish this through the Coordinating Agency for Supplier Evaluation (CASE) to ensure that all employees who perform safety-sensitive functions are covered by drug and alcohol testing programs. According to ARSA, these audits do not extend to maintenance subcontractors with whom the air carrier has no direct relationship. The second administrative burden occurs in ''determining whether the non-certificated subcontractor would have its own drug and alcohol program, an option under the FAA's proposed registration mechanism, or whether it would be included in an existing program of its contractor.''

The FAA believes that it is an excellent business practice for an air carrier to audit its maintenance contractors. Although this is a business decision, the FAA believes that an auditing process is a good way to determine if an entity (at any tier) not only has FAA drug and alcohol testing programs, but also is implementing its programs and testing its employees. However, while an auditing process is a good tool for determining contractor compliance, there are other less costly and less ''burdensome'' tools for a company to ensure contractor compliance with the drug and alcohol testing regulations. For example, a company could use a simple questionnaire to determine if its contractors (at any tier) have a program and are testing their employees who perform safety-sensitive duties.

In response to ARSA's second concern, the FAA would like to reiterate that, since the beginning of its testing regulations, certificated and non-certificated contractors have been allowed, but not required, to submit and implement FAA testing programs. Thus, under the current regulations and under this proposal, contractors make a business decision about whether to have their own programs or obtain coverage under another company's programs.

Some commenters, including ARSA, raised concerns that subcontractors who perform repairs on equipment that is not typically considered to be aviation-related would be subject to testing under the proposed rule change. For example, the commenters suggested the following people would be covered by the proposed rule change: those who repair entertainment systems and telephones; those who repair and refurbish rugs, Formica, wood products and plumbing materials; and dry cleaners who clean aircraft seats in accordance with a component maintenance manual. The drug and alcohol regulations already require that any person who performs maintenance or preventive maintenance for an employer must be drug and alcohol tested. The purpose of this rulemaking is not to specify what constitutes maintenance or preventive maintenance, which are defined by the FAA in 14 CFR 1.1, and 14 CFR part 43. Instead the purpose of this rulemaking is to make it clear that all persons who perform safety-sensitive maintenance or preventive maintenance functions are actually tested.

Whenever maintenance is being performed, it potentially affects the safety of the aircraft. Thus, the FAA believes it is important that all people who perform any type of safety-sensitive maintenance function be subject to testing, even if the maintenance duties are not traditionally considered to be aviation-related. Some of the commenters believed that people performing maintenance not traditionally considered aviation-related would not be aware of this rulemaking. The FAA notes that many of these people are already covered by the regulations and are subject to testing. For those who are performing maintenance not traditionally considered aviation-related, the FAA expects that employers and direct contractors would know of this rulemaking and would notify their subcontractors.

ARSA requested that, in the final rule, the FAA clarify ''in a multiple tier situation which of the upstream maintenance providers would be responsible if a violation of the drug and alcohol rules was committed by a lower tier provider''

The compliance responsibility depends upon the specific facts. Normally, the FAA considers any company that holds itself out as having a registration statement or Operations Specification (OpSpec) to conduct drug and alcohol testing to be responsible for compliance with the regulations. Under the proposal, any higher tiered contractor that uses a subcontractor to perform safety-sensitive work would either include the subcontractor's safety-sensitive employees in its program or ensure that the subcontractor has a registration statement or OpSpec to conduct drug and alcohol testing. The ultimate responsibility for ensuring that the first tier contractor has a program, of course, rests with the air carrier.

Some of the commenters, including ARSA, raised fundamental issues regarding whether they and air carriers can be held responsible for the compliance with essential safety requirements being performed for them by contractors at different levels. One commenter, a repair station, stated that it ''does not have the time or resources to monitor all the contractors that might perform some of our maintenance related work. Even if we could, our end customer could not afford to pay the cost for the article's repair or overhaul. Somewhere in our customer's bill we would have to attempt to recoup the expenses generated during our monitoring of all the vendors and sub-contractors involved.'' In addition, ARSA referred to ''the fiction that an air carrier or any of its direct contractors can reasonably and practically be expected to ensure the compliance of lower tier providers with whom they have no direct relationship.''

The FAA is concerned about any suggestion that contracting or subcontracting out safety-sensitive work could relieve any entity, especially an air carrier, of its responsibilities to ensure compliance with the regulations. Contracting out work to another entity does not mean that an entity is no longer responsible for ensuring compliance with safety requirements. Air carrier safety is the core responsibility of the air carrier. The air carrier may opt to partner with its maintenance providers to ensure that all maintenance work is provided in accordance with the regulations. However, the safety of the air carrier's maintenance and operations ultimately rests with the air carrier.

UTC commented that ''the FAA needs to keep the antidrug and alcohol program responsibility with the air carriers and not extend it to maintenance providers.'' The FAA agrees with UTC that the responsibility for drug and alcohol testing of employees should remain with the air carrier and should not become a requirement of the maintenance providers. In keeping with the Omnibus Act and consistent with the history of the drug and alcohol testing regulations, this proposal does not require maintenance providers to conduct testing. However, maintenance providers may choose to obtain a testing program. Once a maintenance provider registers with the FAA or obtains an OpSpec to conduct drug and alcohol testing, the maintenance provider thereby undertakes the responsibility to properly comply with the regulations.

ARSA commented that the FAA's proposal is based on a fundamental misunderstanding of the maintenance industry's use of subcontractors. Prior to and following the issuance of the NPRM, ARSA and the Aerospace Industries Association surveyed their memberships about maintenance subcontracting practices. For a discussion of the survey results and related correspondence between the FAA and ARSA, see the draft Regulatory Evaluation for this SNPRM that is included in the docket for this rulemaking (Docket No. FAA–2002–11301).

ARSA stated that if the proposed rule language, ''including by subcontract at any tier'', is adopted, the FAA will need to determine how these additional employees will be integrated into the program. ARSA recommended that the FAA permit these employees to be added to the existing pool of covered employees for purposes of random testing without subjecting them to pre-employment testing. ARSA believes this ''grandfather provision'' would be much less disruptive and would recognize the fact that they have been previously performing these functions without being covered by the drug and alcohol rules and without any adverse effect on safety.

The FAA acknowledges ARSA's concern that there may be a disruption in the provision of some maintenance service in the industry resulting from the pre-employment testing of maintenance subcontractors who are already performing safety-sensitive functions but who are not being tested. Although ARSA suggested that a ''grandfather provision'' be added for pre-employment testing subcontractors who have not already been conducting drug and alcohol testing, the FAA is concerned about ''grandfathering'' subcontractors into the regulation because of the high drug positive rate for maintenance workers. Instead, the FAA believes that proposing an extended compliance date for conducting pre-employment testing of subcontractors who are not already being tested is reasonable. Therefore, the FAA is proposing language that would extend the requirement for pre-employment testing existing subcontractor employees to 90 days from the effective date of the final rule, if adopted. While these employees must be pre-employment drug tested and the employer must receive a negative drug test result, there is no requirement that the employee be removed from performance of safety-sensitive functions while the employer is awaiting the negative drug test result. However, if the employee refuses to submit to testing or the employer receives a positive drug test result on the employee, the employer must immediately remove the employee from the performance of safety-sensitive functions.

Both ARSA and UTC commented that the applicability of the drug and alcohol testing regulations should not be extended beyond the level where a direct contractual relationship exists. Specifically, ARSA urged the FAA to limit the drug and alcohol testing rules only to those maintenance providers that have a direct contract with a U.S. air carrier and that take airworthiness responsibility for the work they perform. As an alternative, ARSA requested that the FAA retain a past interpretation on maintenance subcontractors and add an exclusion from drug and alcohol testing for employees of non-certificated entities. ARSA provided two versions of suggested rule language to address these concerns.

The FAA has reviewed the two alternative rule language proposals that ARSA submitted in its comments. ARSA's first alternative ''Covers only those individuals who perform safety sensitive functions as (1) an employee for a Part 121 or Part 135 air carrier, or § 135.1(c) operator, or (2) under a direct contract with these entities.''

The FAA does not believe that this alternative will provide a workable solution to the issue of testing subcontractors because the proposal would change the focus of drug and alcohol testing away from ''who performs the work.'' Under ARSA's proposal it would be easy to avoid the drug and alcohol testing regulations by simply creating additional tiers in the contractual relationship.

ARSA's second alternative ''Covers the individuals specified in Alternative 1, above plus any person (including maintenance subcontractors at any tier)

that (1) takes airworthiness responsibility for the work they perform under Part 43 and/or Part 145 * * *, and (2) has actual knowledge, at the time the work is performed, that it is being accomplished for a Part 121 or Part 135 air carrier, or a § 135.1(c) operator.''

The FAA does not believe that this alternative meets the requirements of safety because it still allows certain persons who are performing safety-sensitive work not to be tested. ARSA's proposal would except from testing individuals who are doing hands-on maintenance merely because these individuals are not signing off on the airworthiness responsibility for the work they perform.

We received one comment from a non-certificated maintenance subcontractor that performs electro-plating for certificated repair stations. This commenter explained that only about 20% of its business is related to aviation, but ''because we cross-utilize our employees, all would have to be covered under Part 121, Appendix I and J because they could be called upon to work on equipment operated by a U. S. air carrier.'' This commenter stated, ''It seems incongruous to us that the FAA would allow us to perform a subcontracted maintenance function without a repair station certificate while at the same time requiring us to subject our employees to a drug and alcohol testing program.''

The commenter is correct in understanding that, under the facts it presented, drug and alcohol testing is necessary for all safety-sensitive employees who are cross-utilized to perform maintenance and preventive maintenance duties for an air carrier subject to the drug and alcohol testing regulations. This is because the regulations have always required that employees performing any safety-sensitive duties be tested. It is not incongruous for the scope of the FAA's drug and alcohol testing regulations to be different from the scope of the FAA's repair station certification regulations. The question of keeping illegal drug users and alcohol misusers out of the performance of safety-sensitive work is very different from the issue of technical qualifications. The drug and alcohol testing regulations are focused on who actually does the work, and not on the person's technical qualifications to do the work or airworthiness responsibility under the regulations. The testing regulations and the certification regulations are different because they focus on different safety concerns.

In addition, although the commenter was concerned that all of its employees would need to be tested because all of them were cross-utilized, that is not necessarily the case. For business reasons, an employer may decide not to designate all employees as eligible to be cross-utilized to perform safety-sensitive functions. Only the employees who are designated as eligible to be cross-utilized would need to be tested.

Several commenters, including ATA, RAA, ARSA, and the Aircraft Owners and Pilots Association (AOPA), stated that the FAA did not provide a safety justification for the proposed rule change. Because the FAA viewed the proposal in Notice 02–04 as a clarifying amendment, we did not discuss the history of the safety justification for testing employees who perform safety-sensitive functions.

The safety considerations that support this proposal are clearly implied from the history of the drug and alcohol testing regulations. Since the inception of the drug and alcohol testing regulations, the annual statistical data indicate that a significant number of the positive test results for both drug and alcohol occur in the maintenance field. Between 1990 and 2001, aviation employers reported 30,192 positive drug test results for all occupations, with 15,340 of those positive drug test results attributable to maintenance workers. Between 1995 and 2001, aviation employers reported 876 alcohol violations for all occupations, with 423 of those violations attributable to maintenance workers.

If we do not require the testing of all employees who perform safety-sensitive functions directly or by contract (including by subcontract at any tier) for an employer, we would omit from testing employees in the aviation industry who have demonstrated a significant history of illegal drug use and alcohol misuse. Therefore, we believe this proposal is in the interest of aviation safety.

Paperwork Reduction Act

This rule contains information collections that are subject to review by OMB under the Paperwork Reduction Act of 1995 (Pub. L. 104–13). The title, description, and respondent description of the annual burden are shown below.

Estimated Burden: The FAA expects that this proposed rule would impose additional reporting and recordkeeping requirements on non-certificated maintenance contractor companies that would need to put together antidrug and alcohol misuse prevention programs and then implement them; it would have the following impacts:

- Additional training and education program, including education programs for anti-drug and alcohol misuse prevention programs, training all employees to the requirements of these programs, and training supervisors to make reasonable cause/reasonable suspicion determinations, which, on an annual basis, sums to $44,951, taking 1,330.11 hours;
- Program development and maintenance, including developing each program and producing the registration information and submitting it to the FAA, which, on an annual basis, averages $1,670, taking 79.50 hours; and
- Annual documentation, including the documentation for the aforementioned training, reasonable suspicion cases, post-accident alcohol tests, refusal to take tests, and positive tests, which, on an annual basis, averages $2,216, taking 105.53 hours.

The total impact on these companies and on their maintenance and preventive maintenance employees averages $48,837, taking 1,515.14 hours annually.

The regulation will increase paperwork for the Federal government, as the FAA would need to process the registration information for these non-certificated maintenance contractor companies, averaging $1,897 annually, taking an average of 8.25 hours.

Persons are not required to respond to a collection of information unless it displays a currently valid OMB control number. The burden associated with this rule has been submitted to OMB for review. The FAA will publish a notice in the **Federal Register** notifying the public of the OMB approval number.

International Compatibility

In keeping with U.S. obligations under the Convention on International Civil Aviation, it is FAA policy to comply with International Civil Aviation Organization (ICAO) Standards and Recommended Practices to the maximum extent practicable. The FAA has reviewed the corresponding ICAO Standards and Recommended Practices and has identified no differences with these regulations.

Regulatory Evaluation Summary

Total Costs and Benefits of This Rulemaking

The estimated cost of this proposed rule is $3.57 million ($2.67 million, discounted). The estimated potential benefits are $7.53 million ($5.29 million, discounted).

Who Is Potentially Affected by This Rulemaking

Private Sector

Approximately 300 non-certificated maintenance contractors that would have to develop antidrug and alcohol misuse prevention programs, affecting about 5,500 employees in 2004, rising to approximately 6,250 employees by 2013.

Government

The FAA will need to process the submitted registration information from each of the subcontractors.

Our Cost Assumptions and Sources of Information

The FAA disagrees with the commenters' assertion that we are changing the current regulations. Instead we continue to believe that we are simply clarifying the regulations. However, if the commenters are correct, then we believe that the proposed rule language would increase the number of personnel tested by no more than 2.5%.

Although we believe that we are merely clarifying the regulations, we recognize that, due to the previous conflicting guidance, some companies with existing programs and some non-certificated contractors may have to modify their current alcohol misuse prevention and antidrug programs. In addition, some non-certificated contractors may have to join another company's program or implement their own program. The FAA does not know how many additional employees or contractor companies would be subject to alcohol misuse prevention and antidrug testing, but will base costs on the following assumptions:

- There are currently 1,188 non-certificated maintenance contractors with antidrug program plans and alcohol misuse prevention programs.
- The FAA is basing costs on an increase of 25%, for an additional 297 contractors; this is expected to rise to 315 in 2013.
- The FAA will base costs on subcontractors initiating and implementing their own programs as opposed to their being covered under another company's program.
- The FAA will base costs, in this analysis, on an additional 2.5% maintenance workers being subject to the antidrug and alcohol misuse prevention programs. Accordingly, the FAA expects an additional 5,466 employees to be subject to these proposed rules in 2004; thus each of these companies would have to test 18 employees in 2004.
- The FAA estimates that the number of employees in the maintenance sector grows at 1.5% per year. Thus, the number of additional employees to be tested is expected to rise to 6,250 in 2013.
- The FAA assumes that there would be two supervisors per contractor and the attrition rate for mechanics is approximately 10% per year.

The FAA believes that the actual number of employees, additional companies, and employees per company would be less than what is being assumed for this analysis, but the FAA is using this number so as to be conservative and not underestimate costs.

Additional Assumptions

- Discount rate—7%.
- Period of analysis—2004 through 2013.
- All monetary values are expressed in 2002 dollars.
- Price of a drug test—$45.
- Price of an alcohol test—$34.
- Time for a drug or alcohol test (hours)—0.75.
- One instructor for every 20 supervisors and/or employees to be trained.
- Value of fatality avoided—$3.0 million.
- Value of avoiding a destroyed aircraft—$241,000.
- Value of avoiding a substantially damaged aircraft—$32,535.

Alternatives We Considered

As this proposal would simply emphasize sections of existing regulations, no alternatives were considered.

Benefits of This Rulemaking

The major benefit from this rulemaking would be the prevention of potential injuries and fatalities and property losses resulting from accidents attributed to neglect or error on the part of individuals whose judgment or motor skills may be impaired by the presence of drugs and/or alcohol.

There was an average of about one part 135 accident every 2 years that resulted in at least two fatalities over the last 10 years; the historical data showed an average of five fatalities for each of these accidents. Avoiding these accidents yields benefits of $15 million in fatalities avoided; avoiding the average of one accident every 2 years halves these benefits to $7.5 million in fatalities avoided per year.

This analysis contains benefits resulting from not having to repair or replace damaged or destroyed aircraft. The most common aircraft involved was the Piper PA–31–350. There were about five times as many substantially damaged aircraft as destroyed aircraft, so the FAA will base the benefits of avoiding one such accident over the next 20 years, thus avoiding, in the next 10 years half a destroyed aircraft, valued at $33,600.

Over the last 10 years, there were 63 part 135 accidents attributable to maintenance as either a cause or a factor in the NTSB accident report, or an average of six a year. Of these 63, six of them had at least two fatalities per accident, with the average such accident averaging five fatalities per accident. While there have been no documented aviation accidents directly attributed to the misuse or abuse of drugs or alcohol, the FAA believes it is possible that such misuse or abuse may have contributed to aviation-related accidents. Accordingly, the FAA believes it is prudent to base benefits on avoiding one such part 135 accident over the next 20 years, thus avoiding in the next 10 years, an estimated total of 2½ fatalities and half a destroyed airplane. These number of accidents, fatalities, and destroyed airplanes are less than or equal to 1% of all maintenance-related accidents that had occurred over the last 10 years; the FAA considers these benefits to be both conservative and reasonable.

The total benefits of this rulemaking were calculated by assuming an equally likely chance of avoiding these accidents in each of the next 10 years. Total benefits sum to $7.53 million ($5.29 million, discounted).

Costs of This Rulemaking

Assuming, under this proposal, an additional 2.5% maintenance workers would be subject to the antidrug and alcohol misuse prevention programs, from 2004 to 2013, the total cost of the rule is estimated to be approximately $3.57 million ($2.67 million, discounted); almost all of these costs are private sector costs. The costs are in four areas:

(1) Testing costs—All the new employees would be subject to all the normal tests—pre-employment, random, post-accident, reasonable cause, return to duty, and follow-up. The cost of testing includes both the actual cost of the test as well as the cost of the employee's time. Over 10 years, additional testing costs sum to $2.76 million ($1.99 million, discounted).

(2) Training and Education Costs—For both the alcohol misuse prevention and the antidrug programs, the employer must train each supervisor who would make reasonable cause determinations. Supervisors must also receive training

on the effects and consequences of drug use. In addition, all employees need to be trained as to the requirements of the alcohol misuse prevention program and the antidrug program. All companies would be required to establish education programs for both the antidrug program and the alcohol misuse prevention program. Over 10 years, total training and education costs sum to $682,700 ($560,000, discounted).

(3) Program Development & Maintenance Costs—Each subcontractor would have to devote resources to developing an antidrug and alcohol misuse prevention testing program. In addition, each of these subcontractors would have to spend time to produce information required for their registration and submit it to the FAA. At the FAA, the submitted information would have to be processed, and also entered into the appropriate database. Over 10 years, total program development and maintenance costs sum to $111,200 ($101,800, discounted).

(4) Annual Documentation Costs—Each subcontractor needs to document certain events; over 10 years, annual documentation costs for these events sum to $21,200 ($16,600, discounted). They include:

—A company's supervisory personnel who make reasonable cause and reasonable suspicion testing determinations must receive specific training on specific indicators of probable drug and alcohol use and misuse. The regulations require each company to document the training;

—Employees also need to be trained as to the requirements of the antidrug program. The regulations require each company to document this training;

—Companies would have to document all reasonable suspicion cases;

—If a post-accident alcohol test is not administered within 2 and 8 hours following the accident, the employer has to document each, stating the reasons the test was not promptly administered;

—Each company must notify the FAA within 5 working days of any employee holding a 14 CFR part 61, 63, or 65 certificate who refused to submit to a required drug or alcohol test; and

—The Medical Review Officer (MRO) needs to send a positive drug test report to the FAA within 12 working days after verifying a positive drug or alcohol test result for any individual who holds a part 67 medical certificate.

Regulatory Flexibility Determination

For this rule, the small entity group is considered to be part 145 repair stations (SIC Code 4581, 7622, 7629, and 7699). The FAA has been unable to determine how many of the part 145 repair stations and their subcontractors are considered small entities. However, as noted in the *Assumptions and Basic Data* portion of the ''Cost of Compliance'' section, for the purposes of this analysis, the FAA assumed that the average non-certificated maintenance contractor company would have to test an average of 19 employees over the 10 years examined by this analysis. Most, if not all, of these companies would be considered small entities.

This proposed rule would cost $3.57 million over 10 years ($2.67 million, discounted). This proposed rule would affect, on average, 306 companies; hence, the cost impact on the average company would be $11,700 ($8,700, discounted). Using the capital recovery rate of 0.14238 yields an annualized cost of about $1,200. The FAA does not know the annual median revenue of these companies, but, given an average of 19 employees who would have to be tested, we believe it is well in excess of $120,000 annually. Since annualized costs would be less than 1% of annual median revenue, the FAA believes that this proposed action would not have a significant economic impact on a substantial number of small entities. The FAA solicits comments on this determination, on these assumptions, on the annualized cost per company, and on their annual revenue; the FAA requests that all comments be accompanied by full documentation.

International Trade Impact Assessment

The Trade Agreement Act of 1979 prohibits Federal agencies from establishing any standards or engaging in related activities that create unnecessary obstacles to the foreign commerce of the United States. Legitimate domestic objectives, such as safety, are not considered unnecessary obstacles. The statute also requires consideration of international standards and, where appropriate, that they be the basis for U.S. standards. The FAA has assessed the potential effect of this SNPRM and has determined that it would have only a domestic impact and therefore no affect on any trade-sensitive activity.

Unfunded Mandates Assessment

The Unfunded Mandates Reform Act of 1995 (the Act) is intended, among other things, to curb the practice of imposing unfunded Federal mandates on State, local, and tribal governments. Title II of the Act requires each Federal agency to prepare a written statement assessing the effects of any Federal mandate in a proposed or final agency rule that may result in an expenditure of $100 million or more (adjusted annually for inflation) in any one year by State, local, and tribal governments, in the aggregate, or by the private sector; such a mandate is deemed to be a ''significant regulatory action.''

This final rule does not contain such a mandate. The requirements of Title II do not apply.

Executive Order 13132, Federalism

The FAA has analyzed this proposed rule under the principles and criteria of Executive Order 13132, Federalism. We determined that this action would not have a substantial direct effect on the States, on the relationship between the national Government and the States, or on the distribution of power and responsibilities among the various levels of government. Therefore, we determined that this proposed rule does not have federalism implications.

Environmental Analysis

FAA Order 1050.1D defines FAA actions that may be categorically excluded from preparation of a National Environmental Policy Act (NEPA) environmental impact statement. In accordance with FAA Order 1050.1D, appendix 4, paragraph 4(j), this proposed rulemaking action qualifies for a categorical exclusion.

List of Subjects in 14 CFR Part 121

Air carriers, Aircraft, Airmen, Alcohol abuse, Alcoholism, Aviation Safety, Charter flights, Drug abuse, Drug Testing, Safety, Transportation.

The Proposed Amendment

In consideration of the foregoing, the Federal Aviation Administration proposes to amend part 121 of Title 14, Code of Federal Regulations as follows:

PART 121—OPERATING REQUIREMENTS: DOMESTIC, FLAG AND SUPPLEMENTAL OPERATIONS

1. The authority citation for part 121 continues to read as follows:

Authority: 49 U.S.C. 106(g), 40113, 40119, 41706, 44101, 44701–44702, 44705, 44709–44711, 44713, 44716–44717, 44722, 44901, 44903–44904, 44912, 45101–45105, 46105, 46301.

2. Amend appendix I to part 121 by revising the introductory text of section III and by adding paragraph A.6. of section V.

Appendix I to Part 121—Drug Testing Program

* * * * *

III. *Employees Who Must be Tested.* Each employee, including any assistant, helper, or

individual in a training status, who performs a safety-sensitive function listed in this section directly or by contract (including by subcontract at any tier) for an employer as defined in this appendix must be subject to drug testing under an antidrug program implemented in accordance with this appendix. This includes full-time, part-time, temporary, and intermittent employees regardless of the degree of supervision. The safety-sensitive functions are:

* * * * *

V. Types of Drug Testing Required. * * *

A. Pre-employment Testing.

* * * * *

6. If an individual has been performing safety-sensitive work under a subcontract prior to (effective date of this regulation), the employer must conduct a pre-employment test and receive a negative test result on that individual no later than (90 days after the effective date of this regulation.)

* * * * *

3. Amend appendix J to part 121 by revising paragraph A. introductory text of section II.

Appendix J to Part 121—Alcohol Misuse Prevention Program

* * * * *

II. Covered Employees

A. Each employee, including any assistant, helper, or individual in a training status, who performs a safety-sensitive function listed in this section directly or by contract (including by subcontract at any tier) for an employer as defined in this appendix must be subject to alcohol testing under an alcohol misuse prevention program implemented in accordance with this appendix. This includes full-time, part-time, temporary, and intermittent employees regardless of the degree of supervision. The safety-sensitive functions are:

* * * * *

Issued in Washington, DC, on May 5, 2004.

Charles J. Ruehle,

Acting Federal Air Surgeon.

[FR Doc. 04–10815 Filed 5–14–04; 8:45 am]

BILLING CODE 4910–13–P

Federal Register

Monday,
May 17, 2004

Part IV

Department of Transportation

National Highway Traffic Safety Administration

49 CFR Parts 571 and 598

Federal Motor Vehicle Safety Standards; Side Impact Protection; Side Impact Phase-In Reporting Requirements; Proposed Rule

DEPARTMENT OF TRANSPORTATION

National Highway Traffic Safety Administration

49 CFR Parts 571 and 598

[Docket No. NHTSA–2004–17694]

RIN 2127–AJ10

Federal Motor Vehicle Safety Standards; Side Impact Protection; Side Impact Phase-In Reporting Requirements

AGENCY: National Highway Traffic Safety Administration (NHTSA), Department of Transportation.

ACTION: Notice of proposed rulemaking (NPRM).

SUMMARY: This NPRM would substantially upgrade the agency's side impact protection standard, especially by requiring protection in crashes with narrow objects and protection against head injuries in side impact crashes with both narrow objects and other vehicles.

First, it would upgrade the standard by requiring that all passenger vehicles with a gross vehicle weight rating of 4,536 kilograms (10,000 pounds) or less protect front seat occupants against head, thoracic, abdominal and pelvic injuries in a vehicle-to-pole test simulating a vehicle's crashing sideways into narrow fixed objects like telephone poles and trees. To meet the head injury criteria in the pole test, vehicle manufacturers would likely need to install dynamically deploying side head protection systems, such as head air bags or inflatable air curtains that drop down from the roof line above the door frame. Air curtains can reduce head injuries in side crashes of passenger vehicles with poles and trees as well as side impacts from vehicles with high front ends. They also can help reduce partial and full ejections through side windows. Compliance with the pole test would be determined in two test configurations, one using a new, second-generation test dummy representing mid-size adult males and the other using a new test dummy representing small adult females.

Second, this NPRM would upgrade the standard's existing vehicle-to-vehicle test that requires protection of front and rear seat occupants against thoracic and pelvic injuries in a test that uses a moving deformable barrier to simulate a moving vehicle's being struck in the side by another moving vehicle. This NPRM would upgrade that test by requiring protection against head injuries. It would replace the mid-size male dummy currently used in that test with the new mid-size male dummy mentioned above and require compliance with the head, thoracic and pelvic injury criteria developed for the new dummy. It would also enhance protection for small adult occupants by adding the new small female test dummy mentioned above and requiring compliance with the injury criteria developed for that dummy. Thus, the number of test configurations would increase from one to two.

DATES: You should submit your comments early enough to ensure that Docket Management receives them not later than October 14, 2004.

ADDRESSES: You may submit comments (identified by the DOT DMS Docket Number) by any of the following methods:

- Web site: *http://dms.dot.gov.* Follow the instructions for submitting comments on the DOT electronic docket site.
- Fax: 1–202–493–2251.
- Mail: Docket Management Facility; U.S. Department of Transportation, 400 Seventh Street, SW., Nassif Building, Room PL–401, Washington, DC 20590–001.
- Hand Delivery: Room PL–401 on the plaza level of the Nassif Building, 400 Seventh Street, SW., Washington, DC, between 9 a.m. and 5 p.m., Monday through Friday, except Federal holidays.
- Federal eRulemaking Portal: Go to *http://www.regulations.gov.* Follow the online instructions for submitting comments.

Instructions: All submissions must include the agency name and docket number or Regulatory Identification Number (RIN) for this rulemaking. For detailed instructions on submitting comments and additional information on the rulemaking process, see the Public Participation heading of the **SUPPLEMENTARY INFORMATION** section of this document. Note that all comments received will be posted without change to *http://dms.dot.gov,* including any personal information provided. Please see the Privacy Act discussion under the Public Participation heading.

Docket: For access to the docket to read background documents or comments received, go to *http://dms.dot.gov* at any time or to Room PL–401 on the plaza level of the Nassif Building, 400 Seventh Street, SW., Washington, DC, between 9 a.m. and 5 p.m., Monday through Friday, except Federal holidays.

FOR FURTHER INFORMATION CONTACT: For non-legal issues, you may call Dr. William Fan of the NHTSA Office of Crashworthiness Standards, at 202–366–4922.

For legal issues, you may call Deirdre R. Fujita of the NHTSA Office of Chief Counsel, at 202–366–2992.

You may send mail to these officials at the National Highway Traffic Safety Administration, 400 Seventh St., SW., Washington, DC 20590.

SUPPLEMENTARY INFORMATION:

I. Introduction
II. Executive Summary
III. Safety Problem
IV. Regulatory, Research and Technological Developments—1990 to Present
a. 1990 Simulated Vehicle-to-Vehicle Test—Chest and Pelvic Injury Criteria
b. 1995 Establishment of Upper Interior Impact Protection Requirements
c. 1996 First Inflatable Side Impact Protection Systems
d. 1997 Report to Congress re Possibility of Harmonizing U.S. and European Vehicle-to-Vehicle Tests
e. 1997 Head Injury Protection Criteria and First Generation Side Impact Test Dummy Capable of Measuring Head Impact Forces
f. 1998 Pole Test To Evaluate Inflatable Side Impact Head Protection Systems
g. Grant of 1998 Petition To Upgrade Side Impact Protection Standard
h. 1997–1999 NHTSA Research re Vehicle-to-Vehicle Test Harmonization
i. 1999–2000 Report to Congress and Response to Petition re Vehicle-to-Vehicle Test Harmonization
j. 2000–2003 NHTSA Research re Side Impact Dummies, Injury Criteria, and Crash Tests
k. Current Status of Second and Next Generation Side Impact Dummies
l. Industry Efforts To Improve Compatibility in Vehicle-to-Vehicle Crashes
V. Existing Standard
VI. Proposed Vehicle-to-Pole Test Procedures, Dummies and Injury Criteria
a. Test Procedure
1. Speed
2. Angle of Impact
3. Positioning the Seat and Impact Reference Line
b. Dummies and Injury Criteria
1. 50th Percentile Male Dummy (ES–2re)
A. Background
B. Injury Criteria
C. Oblique Pole Tests With ES–2 and ES–2re
D. Comparing the ES–2re to the SID–H3
2. 5th Percentile Female Dummy (SID–IIsFRG)
A. Background
B. Injury Criteria
C. Oblique Pole Tests With 5th Percentile Female Dummy
c. FMVSS No. 201 Pole Test Conditions
VII. Proposed Improvements of Moving Deformable Barrier Test
a. Replacement of Existing 50th Percentile Male Dummy With ES–2re and Addition of Injury Criteria
b. Addition of 5th Percentile Female Dummy (SID–IIsFRG) and Injury Criteria
VIII. Other Issues

a. Struck Door Must Not Separate From Vehicle
b. Rear Seat
c. Interaction With Other Side Impact Programs
1. Out-of-Position Criteria
2. FMVSS No. 201 Pole Test
d. Harmonization
IX. Estimated Benefits and Costs of Proposed Pole Test
X. Proposed Leadtime and Phase-In
XI. Rulemaking Analyses and Notices
XII. Public Participation

I. Introduction

This rulemaking is a first step toward achieving two goals: improving side impact protection and reducing the risk of ejection. Both goals have been highlighted in recent agency planning documents. On July 25, 2002, the agency published a notice requesting public comment on a comprehensive multi-year vehicle safety rulemaking and research plan (67 FR 48599; Docket No. NHTSA–2002–212391). Two months later, NHTSA Administrator Jeffrey W. Runge, M.D., formed Integrated Project Teams (IPTs) to conduct an in-depth review of four top priority safety areas. Among them are vehicle compatibility and rollover. Those two areas were selected because they represent the key safety issues presented by the changing composition of the passenger vehicle fleet. The sales and registrations of light trucks, buses and multipurpose passenger vehicles (LTVs) as a percentage of the light vehicle fleet have steadily increased since 1984. In fact, sales of LTVs reached 50 percent of all new light vehicles sold in 2001. The IPTs were chartered to develop comprehensive, science and evidence-based analyses to identify innovative solutions and recommend effective strategies.

Significant progress has been made in addressing these priorities. On June 18, 2003, NHTSA announced the availability of two reports, ''Initiatives to Address Vehicle Compatibility,''[1] and ''Initiatives to Address the Mitigation of Rollovers,''[2] based on the work of the vehicle compatibility and rollover IPTs (68 FR 36534). Initiatives to upgrade side impact protection and reduce ejection figure prominently in both reports. One month later, the agency announced the availability of its final priority plan, ''NHTSA Vehicle Safety Rulemaking and Supporting Research: 2003–2006''[3] (68 FR 43972; July 18, 2003). The plan, which reflects the results of a comprehensive examination of areas of possible improvements, ''outlines the agency's vehicle safety rulemaking actions for the period 2003 to 2006 that offer the greatest potential for saving lives and preventing injury.'' Upgrading side impact protection is one of the most promising of those actions.

Today's proposal to upgrade the agency's side impact protection standard begins the implementation of the initiatives in the agency's report on improving crash compatibility between passenger cars and LTVs (''Initiatives to Address Vehicle Compatibility,'' supra.) This proposal would require vehicle manufacturers to assure side impact protection for a wider range of occupant sizes and over a broader range of seating positions. It would likely lead to the installation of new technologies, such as side curtain air bags and torso side air bags capable of improving head and thorax protection to occupants of vehicles that are laterally struck by a higher-riding LTV. (These different side air bag systems are described in a glossary set forth in Appendix A to this preamble.)

II. Executive Summary

In 1990, the agency amended its side impact protection standard, Federal Motor Vehicle Safety Standard (FMVSS) No. 214, ''Side Impact Protection,'' to include a dynamic test, the first anywhere in the world, that assesses occupant protection when a vehicle is struck in the side by another vehicle. A moving deformable barrier is crashed into the side of a vehicle in a manner that simulates a 90-degree side impact between two moving vehicles at an intersection. The standard addresses thoracic and pelvic injuries to struck-side occupants in those vehicle-to-vehicle crashes.

However, the standard does not address side crashes into fixed narrow objects, which account for approximately 20 percent of deaths and serious injuries that occur in side impacts. It also does not address head injuries, which account for 43 percent of the total deaths and serious injuries in the target population addressed by this NPRM. For smaller-statured occupants, head injury represents a higher proportion of the serious injuries than it does for larger occupants as a result of relatively more head contacts with the striking vehicle.[4]

The current state of knowledge and practicability of measures that could be taken to improve side impact protection are considerably greater than they were just a decade ago. Extensive work by NHTSA, the industry, and others in the safety community have led to substantial progress in dummies, injury criteria and countermeasures. Inflatable side protection systems have become common in current production vehicles. They vary widely in designs, sizes, mounting locations and methods of inflation, and areas of coverage. For example, variations of side impact protection systems include door-mounted thorax bags, seat-mounted thorax bags, seat-mounted head/thorax bags, and head protection systems that deploy from the roof rails (*e.g.*, inflatable tubes and curtains).

Based on this progress and the growing significance of vehicle compatibility issues, NHTSA is proposing to upgrade FMVSS No. 214 substantially by requiring all passenger vehicles with a gross vehicle weight rating (GVWR) of 4,536 kilograms (kg) or less (10,000 lb or less) to protect front seat occupants against head, thoracic and pelvic injuries in a vehicle-to-pole test simulating a vehicle's crashing sideways into narrow fixed objects like telephone poles and trees.[5] This would be the first time that head injury criteria would need to be met under the standard. The vehicle-to-pole test is similar to the one currently used optionally in FMVSS No. 201, except that NHTSA proposes to change the angle of impact from 90 to 75 degrees and increase the test speed from 29 to 32 kilometers per hour (km/h) (18 to 20 miles per hour (mph)[6]).

Vehicles would need to meet the injury criteria using new dummies representing mid-size males and small females. Crash data indicate that 35 percent of all serious and fatal injuries to near-side occupants in side impacts occurred to occupants 5 feet 4 inches (or 163 centimeters)(cm) or less, which are better represented by the small female dummy. Thus, the agency believes that use of both dummies, instead of just the

[1] *http://www-nrd.nhtsa.dot.gov/departments/nrd-11/aggressivity/IPTVehicleCompatibilityReport/.*

[2] *http://www-nrd.nhtsa.dot.gov/vrtc/ca/capubs/IPTRolloverMitigationReport/.*

[3] *http://www.nhtsa.dot.gov/cars/rules/rulings/PriorityPlan/FinalVeh/Index.html.*

[4] Samaha R. S., Elliott D. S., ''NHTSA Side Impact Research: Motivation for Upgraded Test Procedures,'' 18th International Technical Conference on the Enhanced Safety Of Vehicles Conference (ESV), Paper No. 492, 2003.

[5] The pole test would apply to the driver and front outboard passenger seats, and not to the rear seats. In contrast, the moving deformable barrier test applies to both the front and rear outboard seating positions on the side of the vehicle struck by the barrier.

In the pole and MDB tests, both sides of the vehicle are subject to testing by NHTSA. Manufacturers must certify that the vehicle complies with the standard when either side of the vehicle is tested by NHTSA. The standard does not require NHTSA to test both sides of the vehicle.

[6] While 20 mph converts to 32.2 km/h, we propose rounding 32.2 km/h to 32 km/h.

mid-size male dummy, will better represent the at-risk population.[7]

For the mid-size or 50th percentile male, NHTSA proposes to adopt a modified version of the European side impact dummy, the ES–2 dummy, for use in the test, since the overall dummy is technically superior to the SID–H3 50th percentile male test dummy currently used in FMVSS No. 201 and to the SID 50th percentile male test dummy currently used in FMVSS No. 214. The modified ES–2 dummy (known as the ES–2re) is superior in that it has improved biofidelity and enhanced injury assessment capability compared to the other dummies. A predecessor dummy, known as EuroSID–1, is currently specified by European governments for use in perpendicular side impact testing and work has been undertaken to replace that dummy with the ES–2re. The non-governmental European New Car Assessment Program (EuroNCAP) on side impact has used the ES–2 dummy since February 2003 in perpendicular MDB side impact tests.

The small or 5th percentile female dummy has been used by Transport Canada in crash tests in the late 1990s and early 2000, and is used by the Insurance Institute for Highway Safety (IIHS), a nonprofit group funded by insurers, in IIHS's side impact consumer information program which ranks vehicles based on performance when impacted perpendicularly by a moving barrier at about 30 mph. The countermeasures that are installed to meet the proposed pole test would need to enable the vehicle to meet the requirements when tested with both dummies, which would ensure protection for shorter drivers who sit closer to the steering wheel than the mid-size occupant.

We anticipate that vehicle manufacturers will install dynamically deploying side air bags to meet the proposed vehicle-to-pole test. The agency estimates that the proposals in this NPRM would prevent 686 fatalities and 880 MAIS 3 to 5 injuries a year when fully implemented throughout the light vehicle fleet.[8] Those benefits are based on an assumption that manufacturers would use a 2-sensor (per vehicle) combination air bag system. (This system would be the least costly countermeasure that manufacturers could use to achieve compliance. Manufacturers might also install side air curtains or other measures that not only reduce head injuries, but also can help reduce ejections through side windows.) The cost for the 2-sensor combination air bag system is estimated to be $121 per vehicle. We are proposing to provide significant lead time to ensure that the regulatory burden is practicable and feasible.

In addition, this NPRM proposes to upgrade the moving deformable barrier test in several ways. It would enhance the MDB test's existing chest and pelvis protection requirements and require compliance with head injury criteria. It proposes replacing the current 50th percentile male dummy with the new one mentioned above and requiring compliance with the criteria developed for that new dummy. The proposal would also enhance protection for smaller adult occupants by adding the new 5th percentile female dummy mentioned above and require compliance with the injury criteria for that dummy.

Mindful of the magnitude of this rulemaking and the principles for regulatory decisionmaking set forth in Executive Order 12866, Regulatory Planning and Review, NHTSA examined the benefits and costs of a variety of potential proposals and, based on that analysis, took reasonable steps to limit the scope of this NPRM. First, because rear seat occupants make up a small percentage of the seriously injured occupants in side crashes, NHTSA has focused the proposal for the pole test on the front seat. (We note that some side air curtains cover both front and rear side window openings and thus would also afford some head protection to rear seat occupants in the absence of a test applying to the rear seat.)

Second, the agency is not proposing a limit on chest deflection in tests using the 5th percentile female dummy. The modified SID-IIs dummy appears to require further refinement in measuring chest deflection for oblique loading conditions, such as those present in the oblique pole and MDB tests, and so the agency wishes to further analyze test data before proceeding with a proposal limiting the chest deflection of the dummy in the tests proposed today. However, the agency will continue to monitor the chest deflection performance of vehicles in tests using the modified SID-IIs dummy.

Third, NHTSA is also not proposing changes to the standard's MDB at this time. Initiatives to improve vehicle compatibility between passenger cars and LTVs in side crashes are likely to change the characteristics of striking vehicles in the future, as countermeasures are pursued to reduce the aggressivity of LTVs in side impacts. Once the likely future changes to the fleet have been identified, we can determine how the FMVSS No. 214 barrier should be modified to better represent future striking vehicles in side impacts. We also believe that the countermeasures resulting from today's proposed pole test would encompass and go beyond those that would be likely to be installed as a result of a higher/heavier barrier.

III. Safety Problem

In the 2001 Fatality Analysis Reporting System (FARS), there were 9,088 side impact fatalities. For our target population, we excluded from these side impact fatalities those cases which included rollovers as first event (203), rear seat occupants (732), middle front seat or unknown seat occupants (327), far-side occupants (2,601), children under 12 in the front seat nearside (71), and delta-Vs not in our assumed effectiveness range of 19 to 40 km/h (12 to 25 mph) (2,084). We also made an adjustment based on the estimated benefits that would result from the FMVSS No. 201 upper interior requirements for the A-pillar, B-pillar, and roof side rail (160).[9] This left us with a target population of 2,910 fatalities and 7,248 non-fatal serious to critical AIS 3–5 injuries.

The 2,910 fatalities were divided into three groups for the analysis: (a) Vehicle to pole impacts (599); (b) vehicle to vehicle or other roadside objects impacts, which include partial ejections in these cases (1,715); and (c) complete occupant ejections in non-rollovers (636). In this target population, 40 percent of the total fatalities are caused by head/face injuries, 38 percent by chest injuries and 8 percent by abdominal injuries. In contrast, for the 7,248 non-fatal AIS 3–5 target population, chest injuries are the predominant maximum injury source accounting for 59 percent, head/face injuries account for 13 percent, and abdominal injuries account for 6 percent. Combining all serious to fatal injuries, chest injuries account for 53 percent, head/face injuries account for 20 percent, and abdominal injuries account for 7 percent.

In April 2001, NHTSA analyzed fatalities in the 1991, 1995, and 1999 FARS files using non-rollover, near-side impact data. The fatalities occurred in the first and second rows of seats in

[7] You may inspect the dummies by contacting our Vehicle Research and Test Center in East Liberty, OH.

[8] The AIS, or Abbreviated Injury Scale, is used to rank injuries by level of severity. An AIS 1 injury is a minor one, while an AIS 6 injury is one that is currently untreatable and fatal. The Maximum Abbreviated Injury Scale, or MAIS, is the maximum injury per occupant.

[9] NHTSA also adjusted the target population by assuming increased seat belt use based on 2003 use rates.

light vehicles in side impacts with various objects. The percentage of vehicle-to-rigid narrow object impacts has remained stable at approximately 21 percent of the total number of fatal side impact crashes. The percentage of collisions with LTVs has increased, while the percentage of collisions with passenger cars has decreased over time. The results of the analysis are presented below:

TABLE 1.—OCCUPANT FATALITY DISTRIBUTION

[Non-rollover near-side impacts]

	Collisions with passenger cars (percent)	Collisions with LTVs (percent)	Collisions with rigid narrow objects (percent)	Collisions with other vehicles/ objects (percent)
FARS 1991 MY 1987 and Later Light Vehicles	28.9	26.3	20.1	24.8
FARS 1995 MY 1991 and Later Light Vehicles	24.7	31.8	21.2	21.9
FARS 1999 MY 1995 and Later Light Vehicles	20.5	35.5	21.1	22.9

IV. Regulatory, Research and Technological Developments—1990 to Present

a. 1990 Simulated Vehicle-to-Vehicle Test—Chest and Pelvic Injury Criteria

FMVSS No. 214 was amended in 1990 to include dynamic requirements to improve the crashworthiness of vehicles in vehicle-to-vehicle side impact collisions (55 FR 45722; October 30, 1990). The amendments added a dynamic side impact test regulating the level of crash forces that can be experienced by an occupant when seated in a vehicle struck in a side impact. The dynamic requirements focused on thoracic protection because contact between the thorax and the side interior had been a primary source of serious injuries and fatalities and because further work was needed on head protection countermeasures, head injury criterion and test dummies capable of measuring the potential for head injuries in a side impact crash. The requirements were phased-in for passenger cars, beginning in 1993. They were extended in 1995 (60 FR 38749; July 28, 1995) to LTVs with a GVWR of 2,722 kilograms (6,000 lb) or less manufactured on or after September 1, 1998.

b. 1995 Upper Interior Impact Protection Requirements

In 1995, NHTSA issued a final rule amending FMVSS No. 201, ''Occupant protection in interior impact,'' to require passenger cars, and trucks, buses and multipurpose passenger vehicles with a gross vehicle weight rating of 4,536 kg (10,000 lb) or less, to provide protection when an occupant's head strikes certain upper interior components, including pillars, side rails, headers, and the roof, during a crash. The amendments added procedures and performance requirements for a new in-vehicle test, which were phased in beginning in model year 1999.

c. 1996 First Inflatable Side Impact Protection Systems

Side impact air bags (SIABs) were first installed in Mercedes E-class cars and all Volvo passenger cars in model year (MY) 1996. In MY 1997, BMW, VW/Audi, Cadillac, Nissan, and Toyota chose to install SIABs in certain production car models. Since then, SIABs have become more commonly available in the nation's passenger vehicles.[10]

In 1996, NHTSA published an advance notice of proposed rulemaking (ANPRM) to obtain information in evaluating dynamic head protection systems, such as ways of testing these systems to assure that they yield sufficient safety benefits to justify amending the new requirements of FMVSS No. 201 to permit their installation. (61 FR 9136; March 7, 1996.)

d. 1997 Report to Congress re Possibility of Harmonizing U.S. and European Vehicle-to-Vehicle Tests

On September 16, 1996, in Congressional Conference Report 104–785 for the Department of Transportation and Related Agencies' Appropriations Act for fiscal year 1997, the conferees directed NHTSA to study the differences between the U.S. and then-proposed European side impact regulations and to develop a plan for achieving harmonization of these regulations. In response to that directive, NHTSA submitted a side impact harmonization plan to Congress in April 1997 (''Report to Congress NHTSA Plan for Achieving Harmonization of the U.S. and European Side Impact Standards,'' April 1997, see docket NHTSA 1998–3935–1 of the Department's Docket Management System). NHTSA said that it would determine the potential for international harmonization by:

1. Analyzing past research and performing new tests to determine the relative safety benefits offered by each regulation.
2. Coordinating with industry and other interested groups to establish consensus on the activities, eliminate duplication of work, and reduce cost.
3. Determining if functional equivalence exists or can be established between the two requirements.
4. Coordinating with the European Union (EU) to assess harmonization options and approaches.

With respect to the third step, we described how we would follow our functional equivalence process in determining whether FMVSS No. 214 and the modified European regulation are functionally equivalent (49 CFR part 553, Appendix B). This process is used to determine whether the vehicles or equipment manufactured under a foreign standard produce more or at least as many safety benefits as those produced by the vehicles or equipment manufactured under a similar U.S. standard.

e. 1997 Head Injury Protection Criteria and First Generation Side Impact Test Dummy Capable of Measuring Head Impact Forces

The Head Injury Criterion (HIC) for lateral impacts was developed in 1997, when the agency published an NPRM proposing to add an optional vehicle-to-pole side impact test to FMVSS No. 201. 62 FR 45202; August 26, 1997. An anthropomorphic test dummy that was capable of measuring crash forces to the head in a side impact was also developed in 1997. The SID–H3 dummy, specified in 49 CFR part 572, subpart M, is a SID dummy with a Hybrid III head/neck system. The Hybrid III head is instrumented with a tri-axial accelerometer package,

[10] In 1996, under 2% of the passenger cars sold in the U.S. had chest side air bags installed as compared to around 38% in 2002. Also, in 1998, only 0.04% of passenger cars sold in the U.S. had head side air bag systems as compared to 22% in 2002.

positioned to measure the acceleration of the center of gravity. This permits the measurement of HIC. The SID–H3 dummy is currently used in the FMVSS No. 201 optional vehicle-to-pole test (see below) and in NHTSA's New Car Assessment Program (NCAP) for side impact testing.

f. 1998 Pole Test To Evaluate Inflatable Side Impact Head Protection Systems

On August 4, 1998, NHTSA published a final rule amending the upper interior impact requirements of FMVSS No. 201, to permit, but not require, the installation of dynamically deploying upper interior head protection systems that were then being developed by some vehicle manufacturers to provide added head protection in lateral crashes (63 FR 41451). Compliance with the original upper interior impact requirements is tested at specified points called ''target points.'' Since compliance is often not practicable at target points located near the places where these dynamic systems are stored before they are deployed, vehicles equipped with the dynamic systems are allowed to meet alternative requirements at those points. These vehicles are also required to meet new requirements to ensure that these dynamic systems enhance safety. That final rule added procedures and performance requirements for testing the deployment of these systems and their protective capability through a combination of in-vehicle tests and a full-scale vehicle-to-pole crash test. In the crash test, the vehicle is propelled at a speed between 24 km/h (15 mph) and 29 km/h (18 mph) into a rigid pole at an angle of 90 degrees. (This NPRM refers to this FMVSS No. 201 pole test as the ''29 km/h (18 mph)'' pole test.) The pole is aimed at the head of a SID–H3 dummy seated in the front outboard seating position. The pole test injury criterion is HIC of 1000. (63 FR 41451; August 4, 1998.)

g. Grant of 1998 Petition To Upgrade Side Impact Protection Standard

In July 1998, Advocates for Highway and Auto Safety (Advocates) submitted a petition for rulemaking requesting NHTSA to upgrade FMVSS No. 214 in several ways. First, Advocates contended that the injury criteria are not stringent enough, arguing that neither the occupants of passenger cars nor small LTVs are being provided adequate protection when their vehicles are struck by higher, heavier, and more aggressive LTVs. Second, they believed the MDB is not high/heavy enough because the barrier weight/height were originally designed to represent a vehicle fleet that was projected to be lighter and smaller than the current fleet. They stated that since 1988, the passenger car fleet has not changed significantly while the LTV fleet has grown in average weight and number. Third, they thought that EuroSID–1 has advantages to SID because of additional measurement capability. They recommended the following: Amending FMVSS No. 214 to a higher safety performance level such that superior side impact air bags would be developed and installed in vehicles as standard equipment; replace the quasi-static door crush test with a side-to-pole impact test like that used under the recent FMVSS No. 201 upgrade; lastly, replace SID with Eurosid–1. The agency granted the petition because it believed that the side impact research activities it had planned would fully address the issues raised by the petition.

h. 1997–1999 NHTSA Research re Vehicle-to-Vehicle Test Harmonization

As a first step in assessing the functional equivalence of the U.S. and European side impact regulations, we tested vehicles that were certified to FMVSS No. 214 using the procedures and criteria of EU 96/27/EC (as modified, with a test dummy placed in the rear outboard seating position in addition to the front outboard position). The vehicles provided a range of marginal to good performers in FMVSS No. 214 tests and represented a wide range of manufacturers. The results indicated the ranking of the vehicles, according to compliance margin, when tested under EU 96/27/EC was not the same as when they were tested under FMVSS No. 214.

Additionally, a measurement anomaly in the European test dummy (EuroSID–1) related to the rib displacement was present in most, if not all, tests. This anomaly, along with the limited amount of comparative test data, did not allow a positive determination of functional equivalence of the two side impact regulations.

i. 1999–2000 Report to Congress and Response to Petition re Vehicle-to-Vehicle Test Harmonization

Based on our testing of eight vehicles that were certified to FMVSS No. 214 using the procedures and criteria of EU 96/27/EC, we informed Congress that we could not conclude from this set of testing whether vehicles designed to meet FMVSS No. 214 would meet the EU regulation. The agency also determined that the lighter and less stiff EU MDB was less representative of the current and future U.S. fleet than the current FMVSS No. 214 MBD, and that side impact countermeasures that would be based on the EU test might therefore not lead to enhanced real world safety. (See NHTSA's report to Congress on the agency's progress in assessing the functional equivalence of the two regulations: ''Status of NHTSA Plan for Side Impact Regulation Harmonization and Upgrade, Report to Congress, March 1999,'' Docket NHTSA–98–3935–10.)

Also based on that testing, we denied most aspects of a 1997 petition for rulemaking from the Association of International Automobile Manufacturers (AIAM), the Insurance Institute for Highway Safety, and the American Automobile Manufacturers Association. These petitioners asked us first to determine that the dynamic side impact provisions of a European regulation (consisting of performance requirements, crash test barrier, test barrier face, and test procedures) are at least ''functionally equivalent'' to those in FMVSS No. 214. (65 FR 33508; May 24, 2000.) Based on the assumption that that determination would be made, the petitioners then asked that we add the dynamic provisions of the European regulation to FMVSS No. 214 as a compliance alternative in the short run. Based on their belief that the European dynamic provisions are superior to those in FMVSS No. 214 in some respects, they also wanted us to replace the current dynamic provisions of FMVSS No. 214 with those of the European regulation (slightly modified) in the long run. In addition to our inability to determine that the European standard was at least functionally equivalent to FMVSS No. 214, we noted that the European barrier was less representative than the FMVSS No. 214 barrier of the side impact crash environment in this country.

However, we granted the portion of the petition requesting that we open a rulemaking proceeding to consider replacing the 50th percentile male side impact test dummy (SID) currently specified in FMVSS No. 214 with an improved version of the dummy (EuroSID–1) specified in the European regulation. We said that if the mechanical anomalies with EuroSID–1 could be solved, the greater measurement capabilities of the dummy would make its adoption attractive as a way of upgrading FMVSS No. 214. Thus, we said that our first steps would be to work with the Europeans to fix the dummy's mechanical problems. Once that is accomplished, we would consider issuing a proposal to replace SID with the improved side impact dummy. We noted that adopting a more advanced test dummy means that we would also be considering the appropriate injury criteria to adopt with

the dummy into our side impact protection standard. We said that if we eventually proposed to replace SID with an improved EuroSID–1, we might propose adopting the injury criteria now in EU 96/27/EC as well.

j. 2000–2003 NHTSA Research re Side Impact Dummies, Injury Criteria, and Crash Tests

In the 1999 Report to Congress, we outlined our side impact research plan for both harmonization and upgrade of FMVSS No. 214. Among other matters, the agency planned to improve the EuroSID–1 dummy to a new version, Eurosid–2 (ES–2), pursue incorporating a pole test using the ES–2 or SID–H3 dummy currently used in FMVSS No. 201's optional pole test, and study the benefits and costs of side air bags and the possible risks to out-of-position occupants. *Id.,* Appendix A.

NHTSA conducted or participated in extensive research following the research plan. We analyzed 1990–2001 crash data to determine characteristics of the occupants injured in near-side side impacts and how they were being injured, and to better understand the crash environment of vehicle-to-vehicle and narrow object side crashes, and found that head injuries and injuries to small statured occupants should be addressed. We fixed back-plate grabbing problems with the ES–2 dummy,[11] evaluated a 5th percentile female side impact dummy (SID–IIs, see later section) and made determinations as to the dummies' suitability for crash testing. Injury criteria for occupant head, chest, abdomen and pelvis were also developed and/or evaluated. We conducted out-of-position testing of side air bags to assess risks of the SIABs to children. The agency also closely monitored the Insurance Institute for Highway Safety's (IIHS's) progress on developing that organization's side impact moving barrier consumer information test program, and assessed the degree to which our and IIHS's programs can best complement each other.

The results of these undertakings led us to decide to concentrate our efforts on improving head protection in side impacts by way of incorporating a pole test into FMVSS No. 214, with new test dummies capable of measuring head impact forces. An oblique (75 degree), 32 km/h (20 mph) crash test was developed. Full-scale oblique pole tests were conducted with the ES–2, SID–H3 and SID–IIs dummies, with injury assessment references values developed for the injury mechanisms measured by the dummies. ''NHTSA Side Impact Research: Motivation For Upgraded Test Procedures,'' Samaha, *et al.* (2003).

Full-scale side impact tests using a moving barrier were also conducted. These research projects were publicly presented in various forums, such as in a July 2002 NHTSA Research and Development Public Meeting[12] and in meetings of the International Harmonized Research Agenda (IHRA) Side Impact Working Group, and others.

k. Current Status of Second and Next Generation Side Impact Dummies

Today, there are new side impact dummies capable of measuring HIC in addition to the SID–H3 50th percentile male dummy. The ES–2 50th percentile male dummy has a well-developed biofidelic head with injury measurement capabilities. (The ES–2 has been modified with regard to rib extensions to address structural deficiencies identified by NHTSA in injury measurement of the chest in the dummy. The modified dummy, hereinafter referred to as ''ES–2re,'' is described in detail later in this preamble.) There also is a test dummy representing a 5th percentile female, the SID–IIs, that is capable of measuring forces to the head, neck, shoulder, thorax, abdomen and pelvis body regions. In addition, a next-generation 50th percentile male side impact dummy, known as WorldSID, is under development by industry representatives from the U.S., Europe and Japan and the European and Japanese governments (see Docket No. 2000–17252). This future dummy is intended to better predict a wider range of injury potential in side impact testing than current dummies. However, the dummy is not yet available.

l. Industry Efforts To Improve Compatibility in Vehicle-to-Vehicle Crashes

In response to the NHTSA Administrator's call for action to reduce the problem of vehicle incompatibility, some vehicle manufacturers have agreed to introduce changes to their LTVs to improve their compatibility in crashes with passenger cars. The Alliance of Automobile Manufacturers and IIHS announced a new voluntary industry commitment on December 4, 2003, to enhance occupant protection in front-to-side and front-to-front crashes.[13] The industry initiative consists of improvements and research made in several phases focusing on changes to improve the geometric mismatch between the frontal structures of LTVs and passenger cars, and on accelerating the installation of side impact air bags.

Under Phase 1 of the initiative concerning front-to-side crashes, manufacturers[14] have agreed that, not later than September 1, 2007, at least 50 percent of each manufacturer's new passenger car and light truck (GVWR up to 8,500 lb) production intended for sale in the U.S. will be designed in accordance with either of the following head protection alternatives: (a) HIC_{36} performance of 1000 or less for a SID–H3 crash dummy in the driver's seating position in an FMVSS No. 201 pole impact test, or (b) HIC_{15} performance of 779 or less (with no direct head contact with the barrier) for a SID–IIs crash dummy in the driver's seating position in the IIHS MDB side impact crash test.

In Phase 2, not later than September 1, 2009, 100 percent of each manufacturer's new passenger car and light truck (GVWR up to 8,500 lb) production will be designed in accordance with the IIHS MDB recommended practice of HIC_{15} performance of 779 or less for a SID–IIs crash dummy in the driver's seating position.[15]

The agency welcomes these efforts. They are important and necessary first steps to reduce the problems associated with vehicle incompatibility. Voluntary efforts to equip vehicles with these new designs and life-saving devices will begin saving increased numbers of lives sooner than through the traditional regulatory approach and will reduce the cost of complying with government regulations.

The oblique pole test proposed by this NPRM would be phased-in over three years beginning approximately four years from the publication date of a final rule. This leadtime is proposed to give adequate time for manufacturers to plan

[11] NHTSA and the research arm of the EU (the European Enhanced Vehicle Safety Committee) recognized the potential for harmonizing on the use of a side impact test dummy and focused efforts on the evolution of the Eurosid into the ES–2re.

[12] ''Side Impact Upgrade Research Update,'' *http://www-nrd.nhtsa.dot.gov/departments/nrd-01/Presentations/0702NRDmtg.html.*

[13] See Docket NHTSA–2003–14623.

[14] BMW Group, DaimlerChrysler Corporation, Ford Motor Company, General Motors, Honda, Hyundai, Isuzu, Kia, Mazda, Mitsubishi, Nissan, Subaru, Suzuki, Toyota and Volkswagen.

[15] Phase 3 consists of research using the IIHS barrier to assess the benefits of adding performance criteria for other body regions, specifically, the thoracic and abdominal regions. In addition, the research will also assess the potential benefits of performance criteria for a rear-seat test dummy and a 50th percentile male dummy (WorldSID). In Phase 4, the manufacturers and IIHS will investigate the opportunities to enhance structural interaction between vehicles in front-to-side crashes. The work will include an assessment of the IIHS side impact barrier with regard to the front-to-front compatibility performance criteria.

for and design to specifications enabling their vehicles to meet an oblique test. Yet, if manufacturers began installing side impact air bags voluntarily on a widespread basis by 2007 with full implementation by 2009, we could see the fleet change years before implementation of the final rule. Many hundreds of lives could be saved in the near term.

The near term voluntary installation of side impact air bags would be a significant improvement to side crash protection. In the long term, installation of side air bag systems meeting our oblique pole test would take this improvement even further. The enhanced side impact air bags envisioned by this NPRM would save even more lives—hundreds more each year—than those saved by present technologies. Together, the industry's near term voluntary initiatives and the agency's long term regulatory solutions would address the side impact safety problem in a comprehensive and complementary way.

V. Existing Standard

FMVSS No. 214 specifies two types of performance requirements intended to protect the thoracic and pelvic regions of an occupant: ''quasi-static'' requirements and ''dynamic'' requirements. They apply to passenger cars and to multipurpose passenger vehicles, trucks, and buses with a GVWR of 4,536 kg (10,000 lb) or less and 6,000 lb or less, respectively.

The quasi-static requirements limit the extent to which the side door structure of a vehicle is pushed into the passenger compartment during a side impact. The standard requires each side door to resist crush forces that are applied by a piston pressing a 300 mm (12 inch) steel cylinder against the door's outer surface in a laboratory test. Since the requirement became effective in 1973, vehicle manufacturers have generally chosen to meet the requirement by reinforcing the side doors with metal beams.

The dynamic side impact test currently regulates the level of crash forces that can be experienced by an occupant's chest and pelvis when seated in a vehicle struck in a side impact. The dynamic requirements focus on thoracic pelvic protection because contact between the thorax and the side interior has been the primary source of serious injuries and fatalities.

The dynamic side impact test simulates a 90-degree intersection impact of a striking vehicle traveling 48 km/h (30 mph) into a target (*i.e.*, test) vehicle traveling 24 km/h (15 mph). This is achieved by running a moving deformable barrier (MDB), which has all wheels rotated 27 degrees (crab angle) from the longitudinal axis, into the side of a stationary (test) vehicle at a 90-degree contact angle with a 54 km/h (33.5 mph) closing speed. At the initial contact, the longitudinal axes of the MDB and the test vehicle are perpendicular to each other. Two side impact dummies (SIDs) are used in the target vehicle. They are positioned on the struck side of the vehicle, one in the front seat with the other directly behind in the rear seat.

The MDB, which simulates the striking (*i.e.*, bullet) vehicle, has a mass of 1,361 kilograms (kg) (3,000 lb). The weight of the MDB and the geometry and material properties of the MDB's aluminum honeycomb contact face were derived from an adjustment of the average properties of the vehicle fleet (passenger cars and LTVs) in existence at the time of the development of the dynamic side impact regulation.

The test procedures focus on the dummy's chest and pelvis acceleration responses, which have been correlated with crash and test data regarding the conditions that produce serious occupant injuries. The instrumented dummies must not exhibit chest accelerations and pelvic accelerations above specified thresholds in order to pass the test. The maximum rib and spine accelerations measured on the chest are averaged into a single metric called the Thoracic Trauma Index (TTI(d)), which has an 85g limit for 4-door vehicles and a 90g limit for 2-door vehicles. The pelvic acceleration has a 130g limit.[16]

VI. Proposed Vehicle-to-Pole Test Procedures, Dummies and Injury Criteria

This NPRM proposes subjecting all vehicles[17] with a GVWR of 4,536 kg (10,000 lb) or less to a dynamic vehicle-to-pole test that is similar to the one used to test some vehicles under FMVSS No. 201, except that we are proposing to change the angle of impact from 90 to 75 degrees (which would result in bags having to cover a larger area of the window exposed to occupant contact), and the test speed from 29 to 32 km/h (from 18 to 20 mph) (which would increase the severity of the test).[18] The purpose of requiring vehicles to satisfy this test is to ensure protection for occupants in a wider range of real world impacts than would be the case if we used the FMVSS No. 201 pole test.

A test dummy capable of measuring head injury potential would be used to represent a 50th percentile male. NHTSA proposes to adopt the ES–2re dummy for use in the pole test and in the barrier test, since, as discussed in a later section, we have tentatively determined that the dummy is technically superior to the SID–H3 test dummy used in FMVSS No. 201 and to the SID used in FMVSS No. 214. Alternatively, we request comments on using the SID–H3 dummy, since it can measure the risk of head injury. In addition, the NPRM proposes to use the modified SID–IIs dummy representing a 5th percentile female in both the pole and MDB tests. These dummies together better represent the at-risk population than those in the current standard.

a. Test Procedure

The agency is proposing to adopt a vehicle-to-pole test similar to that specified in FMVSS No. 201, with modifications relating to the angle and speed at which the test vehicle is propelled into the pole and to the test dummies used in the test and the positioning of those dummies. Based on the agency's experience in the FMVSS No. 201 compliance test program and in research done in support of today's NPRM, NHTSA tentatively concludes that the vehicle-to-pole test proposed today would better address the harm

[16] At this time, the agency is conducting an evaluation of FMVSS No. 214 to determine the effectiveness of side padding in reducing injury risks in side impacts. The first part of the evaluation, focusing on older model year vehicles, was completed in 1999 (DOT HS 809 004, NHTSA Technical Report, October 1999). The principal finding of this Phase-1 evaluation was a statistically significant association of TTI(d) with side impact fatality risks in model year (MY) 1981–1993 passenger cars. The observed relationship was stronger in 2-door cars than in 4-door cars.

[17] We propose excluding certain vehicles from the pole test: motor homes, tow trucks, dump trucks, ambulances and other emergency rescue/medical vehicles (including vehicles with fire-fighting equipment), vehicles equipped with wheelchair lifts, vehicles with raised or altered roof designs (see definitions in FMVSS No. 216, ''Roof crush resistance''), and vehicles which have no doors, or exclusively have doors that are designed to be easily attached or removed so that the vehicle can be operated without doors. Many vehicles within these categories tend to have unusual side structures that are not suitable for pole testing or have features, such as a lowered floor or raised roof, which could pose practicability problems in meeting the test. Comments are requested as to whether these vehicles should be excluded from only the HIC requirement or from both head and thoracic protection in the pole test. Comments are also requested on the need to exclude other types of vehicles from the pole test, such as convertibles that lack a roof structure enabling the installation of an air curtain. Suggestions that NHTSA exclude certain vehicle types should include information supporting the exclusion and a discussion of the extent of the exclusion (*e.g.*, from only the limit on HIC and not the limits on the other injury criteria of this proposal).

[18] The lateral component of the velocity would increase only 1.3 mph and not 2 mph.

caused by narrow object impacts in the real world, and lead manufacturers to equip their vehicles with upper interior, dynamically deploying head protection systems.[19]

The pole would have the same specifications as the pole used in the vehicle-to-pole test specified in FMVSS No. 201. It would be a vertical metal structure beginning not more than 102 mm (4 inches) above the lowest point of the tires on the striking side of the test vehicle when the vehicle is loaded as specified in the standard and extending above the highest point of the roof of the test vehicle. The pole would be 254 mm (10 inches) ±6 mm in diameter and set off from any mounting surface such as a barrier or other structure, so that a test vehicle would not contact such a mount or support at any time within 100 milliseconds of initiation of vehicle-to-pole impact.

As we noted in the rulemaking adding the vehicle-to-pole test to FMVSS No. 201 (63 FR 41451, 41457; August 4, 1998), the 254 mm (10 inch) pole diameter differs from the pole diameter specified by ISO in its final recommendation. ISO specifies a pole diameter of 350 mm (14 inches). The diameter of the rigid pole specified in FMVSS No. 201 was set at 254 mm in 1998 based on data from the Federal Highway Administration (FHWA) that the pole diameter at the window sill level for most poles involved in single vehicle side crashes was approximately 254 mm (10 inches). FHWA has informed NHTSA that there are 80 million timber utility poles in the roadside environment and that the most common size pole would have a diameter of 254 mm (10 inches) at the mid-height of passenger car doors. (See July 11, 2003 memorandum, a copy of which is in the docket.) Therefore, the 254 mm (10 inch) diameter rigid pole is representative of poles struck in side crashes in the U.S.

In a vehicle-to-pole test, the center line of the rigid pole is aligned with an impact reference line drawn on the struck side of the vehicle. In the procedures for the proposed oblique pole test, the impact reference line is in a vertical plane that passes through the center of gravity (CG) of the dummy's head in a direction that is 75 degrees from the vehicle's longitudinal center line. When conducting a test with the 50th percentile male dummy, the dummy and the vehicle seat would be positioned as in FMVSS No. 214 (mid-track fore-and-aft). When conducting a test with the 5th percentile female dummy, the vehicle seat would be positioned full-forward. In today's proposed pole test, the initial pole-to-vehicle contact must occur within an area bounded by two vertical planes located 38 mm (1.5 inches) forward and aft of the impact reference line.[20]

The agency's tests conducted in support of this NPRM demonstrate the repeatability of the proposed oblique pole test. NHTSA conducted three repeatability tests using the 1999 Nissan Maxima. The test results show that the location of first contact between the pole and vehicle exterior were in the range of 2 mm (0.08 in) and 15 mm (0.59 in) rearward of the impact reference line. In all three tests, the head of the ES–2 dummy contacted the pole. Later, NHTSA conducted two additional oblique pole tests using 1999 Volvo S–80 cars. Test results show that the contact lines were 5 mm (0.2 in) and 32 mm (1.26 in) rearward of the impact reference line. One test was conducted with a SID-H3 dummy and another with an ES–2 dummy. (While the head of both dummies contacted the pole, the SID-H3 head rotated off the air curtain directly into the pole, resulting in a very high HIC score.) In conclusion, in all five tests, the contact lines were within the 38 mm (1.5 inch) tolerance limit specified in the FMVSS No. 201 procedure and in this proposal, and the dummy's head contacted the pole directly in tests without an inflatable head protection system (HPS) or indirectly (including head rotating into the pole) in tests with an HPS.

The aforementioned tests were conducted with the vehicle seat positioned as specified in FMVSS No. 201.[21] Two oblique pole tests with the seat positioned mid-track, as specified in FMVSS No. 214, were completed with each of the 1999 Volvo S–80 and 2000 Saab vehicles. The impact lines for the four tests were all less than 19 mm (0.75 inches), well within the tolerance of 38 mm (1.5 inches) of the impact reference line.

1. Speed

The proposed test speed is 32 km/h (20 mph). Crashes with delta-V 32 km/h (20 mph) or higher result in approximately half of the seriously injured occupants in narrow object near-side crashes. The derivation of the median delta-V (32 km/h or 20 mph) was based on all belted occupants with serious injuries in 1990–2001 NASS near-side crashes with narrow objects regardless of impact angles. Based on the lateral delta-V, a test speed of 29 km/h (18 mph) for the 90-degree pole test would be slightly over 30 km/h (19 mph) in a 75-degree pole test. Based on these data, NHTSA tentatively concludes that a 32 km/h (20 mph) test would be more appropriate than a 29 km/h (18 mph) test speed, because it better corresponds to the speed of real world crashes that result in serious injury.

Comments are requested on the alternative of a 29 km/h (18 mph) test speed. The 29 km/h (18 mph) test speed is used in the perpendicular pole test of FMVSS No. 201.

2. Angle of Impact

This NPRM proposes that the angle at which a vehicle is propelled into the rigid pole would be 75-degrees rather than the 90-degree angle used in FMVSS No. 201. (This test using the 75-degree impact angle is sometimes referred to in

[19] The pole test is very similar to the proposed International Organization for Standardization (ISO) test procedure found in the ISO/TC22/SC10/WG3 draft ISO Technical Report, ''Road Vehicles, Dynamic Side Impact Crash Test Procedure for Evaluating Occupant Interactions with Side Airbags for a Pole Impact Simulation'' (ISO/CD 15829, February 9, 1995), with differences noted below.

[20] This NPRM proposes to refine how the vehicle test attitude is determined. Currently, the vehicle attitude is defined by measurements made from the ground (a level surface) to a reference point placed on the vehicle body above each of the wheels. These measurements are made with the vehicle in the ''as delivered,'' ''fully loaded,'' and ''pre test (or as -tested)'' conditions. This NPRM proposes that the method used to determine the test attitude be revised to align with that used in S13.3 of FMVSS No. 208. In that provision (specifying test procedures for a sled test), a test attitude is determined based on door-sill angle measurements to control the vehicle's pitch attitude. This NPRM also proposes to define the vehicle's roll attitude by a left to right angle measured along a fixed reference point at the front and rear of the vehicle at the vehicle longitudinal center plane. We have placed in the docket for comment a document setting forth the test procedures the agency is developing for the test.

NHTSA is proposing these changes because we believe that measuring the angles more directly, better facilitates and more accurately determines the vehicle attitudes than by use of the method in current S6.2 of FMVSS No. 214 (specifying test procedures for the MDB test). NHTSA also proposes to use the new method to define the vehicle test attitude for the MDB test. In the MDB test, the dummy and vehicle instrumentation, high-speed cameras, associated brackets and instrumentation umbilical lines that are added to the vehicle make it difficult sometimes to achieve the corridor between the as delivered and fully loaded attitudes, particularly at the right front position of the vehicle. (The agency also requests comments on keeping the present method used to determine vehicle test attitude, but adding a ± 10 mm tolerance.)

[21] Under the FMVSS No. 201 seating procedure, the dummy's head is positioned such that the point at the intersection of the rear surface of its head and a horizontal line parallel to the longitudinal centerline of the vehicle passing through the head's center of gravity is at least 50 mm (2 inches) forward of the front edge of the B-pillar. If needed, the seat back angle is adjusted, a maximum of 5 degrees, until the 50 mm (2 inches) B-pillar clearance is achieved. If this is not sufficient to produce the desired clearance, the seat is moved forward to achieve that result.

this document as the ''oblique pole test.'')

In the oblique pole test, when testing the driver side of the vehicle, an impact reference line would be drawn on the vehicle's exterior where it intersects with a vertical plane passing through the head CG of the seated driver dummy at an angle of 75 degrees from the vehicle's longitudinal centerline measured counterclockwise from the vehicle's positive X axis as defined in S10.14 of the proposed standard. When testing the front passenger side, the impact reference line would be drawn where it intersects with a vertical plane passing through the head CG of the passenger dummy seated in the front outboard designated seating position at an angle of 285 degrees from the vehicle's longitudinal centerline measured counterclockwise from the vehicle's positive X axis as defined in S10.14 of the proposed standard. The vehicle is aligned so that, when the pole contacts the vehicle, the vertical center line of the pole surface as projected on the pole's surface, in the direction of the vehicle motion, is within a surface area on the vehicle exterior bounded by two vertical planes in the direction of the vehicle motion and 38 mm (1.5 inches) forward and aft of the impact reference line. The test vehicle would be propelled sideways into the pole. Its line of forward motion would form an angle of 75 degrees (or 285 degrees) (±3 degrees) in the left (or right) side impact measured from the vehicle's positive X-axis in the counterclockwise direction.

The agency tentatively concludes that the proposed oblique pole test would enhance safety because it is more representative of real-world side impact pole crashes than a 90-degree test. Frontal oblique crashes, *i.e.*, at a principal direction of force (PDOF) of 74 to 84 degrees clockwise or counter clockwise from 12 o'clock, account for the highest percentage of seriously injured (MAIS 3+) near-side occupants in narrow object crashes. However, the crash data also show that the PDOF distribution encompasses a wide range of approach angles, where the mean cumulative distribution is a 60-degree impact angle. (As discussed later in this section, a steeper angle than 75-degrees is not considered appropriate because of the need for repeatability of the test procedure.)

The oblique pole test also meets the need for safety because, unlike a 90-degree pole test, it exposes the dummy's head and thorax to both lateral and longitudinal crash forces that are typically experienced in rear world side impacts. Weighted 1990–2001 NASS/CDS side impact data show that in narrow object crashes, serious head and chest injuries are dominant for both small and large stature occupants. Therefore, in developing the oblique pole test procedure, the agency sought to establish a performance test that would both emulate the real world crash conditions while providing head and chest injury reduction benefits in the identified target population.

NHTSA believes that an oblique impact angle would also serve the safety need because the test is likely to result in wider inflatable head protection systems and thus protect occupants over a wider range of impacts with narrow objects. A head air bag just wide enough to meet a perpendicular pole test might not provide benefits during an oblique crash, as the head of an occupant could move laterally and forward at an angle rather than moving strictly laterally into the head air bag. For example, in a 75-degree test of a Nissan Maxima with the ES–2 dummy, the combination head/thorax side impact air bag was too small to prevent the occupant head from rotating into the pole. The HIC score was 5,254. In a 90-degree test, the same MY Maxima produced successful results, with a HIC score of 130. This contrast in results between the 75- and 90-degree tests shows up repeatedly in tests of other vehicles as well. A 1999 Volvo S–80 with an air curtain and chest air bag tested obliquely with the SID–H3 resulted in a HIC of 2,223, while a HIC of 237 was achieved in a 90-degree test.[22] These data are presented in more detail later in this document and in the Preliminary Economic Assessment accompanying this NPRM.

An air bag might also fail to inflate in an oblique crash if the side air bag system were closely tuned to sensing and responding in a 90-degree test using a 50th percentile male dummy. As discussed later in this preamble, data from crash tests conducted in support of this rulemaking show that side air bags in a Ford Explorer and a Toyota Camry that were certified as meeting the requirements of the 90-degree pole test of FMVSS No. 201 did not inflate at all in an oblique (75 degree) test using a 5th percentile female dummy. The HIC results for the 5th percentile female (SID–IIsFRG) dummy placed in the driver's seats of these vehicles were in the thousands (13,125 and 8,706, respectively).

Comments are requested on NHTSA's conclusions that combination and head protection air bags would generally need to be wider if the agency adopted a 75-degree vehicle-to-pole test instead of a 90-degree one, particularly if the ES–2re and SID–IIsFRG dummies were both used in testing side air bags. NHTSA believes that present seat-mounted head/thorax air bags would need to be redesigned to extend the air pocket substantially further forward toward the A-pillar to provide coverage in a 75-degree oblique test. The air bags would likely need a more robust inflation system and a larger size to reach the part of the vehicle that would be struck by the dummy's head in a 75-degree pole test.[23]

In contrast, side curtains might not need to be substantially widened to meet an oblique pole test. The agency believes that most current side air curtains are tethered to the A- and C-pillars of vehicles and generally would need less redesign than seat-mounted bags to meet an oblique pole test. Air curtains might thus be the countermeasure chosen by many manufacturers to meet the vehicle-to-pole test requirements proposed today.

In addition, after evaluating research conducted on a number of HPS, the agency has determined that air curtain systems could be effective in preventing or reducing complete and partial occupant ejection through side windows. ''Rollover Ejection Mitigation Using Inflatable Tubular Structures,'' Simula, *et al.*, 1998; ''Status of NHTSA's Ejection Mitigation Research Program,'' Willke, *et al.*, ESV 2003. This is important because the fatality rate for an ejected vehicle occupant is three times as great as that for an occupant who remains inside of the vehicle.

The best way to reduce complete ejection is for occupants to wear their safety belts. However, of the 5,400 ejected fatalities through front side windows, 2,200 are from partial ejections. Fatal injuries from partial ejection can occur even to belted occupants,[24] when their head protrudes outside the window and strikes the ground in a rollover or even the striking object (*e.g.*, pole or a taller vehicle hood) in a side impact.

While the cumulative distribution of the angle of approach of near-side

[22] However, that huge difference was not present in tests of the 1999 Volvo with the ES–2 dummy. Tested obliquely, the Volvo achieved a HIC of 465; in a 90-degree test, the HIC was 244.

[23] Simply using a 5th percentile female dummy in addition to a 50th percentile male dummy in a 90-degree pole test might not result in seat-mounted head/thorax bags being wider. The two dummies would be positioned fore-and-aft and horizontally at different places in the vehicle. However, if the HPS were seat-mounted, the seat-mounted HPS would travel along the seat track with the dummies. That HPS could be tuned to a 90-degree pole test and not provide benefits in an oblique impact.

[24] About 60 percent of the partial ejections occurred to belted occupants.

narrow object crashes has a mean of 60 degrees, based on its research, the agency has concluded that the 75-degree impact is repeatable to simulate in a laboratory test while a 60-degree impact is not. The more oblique the angle is, as measured from the lateral direction (*e.g.*, 30 degrees for the 60-degree impact versus 15 degrees for the 75-degree impact from the longitudinal direction), the more difficult it is to control dummy head and/or body kinematics (specifically, direction of the dummy head motion). For more oblique angles (as measured from the lateral direction), at the initial pole-to-vehicle contact, the lateral distance from the centerline of the pole to the head center of gravity is larger, and more of the vehicle structure, specifically the seat, is involved in that crush space. Different seat designs and structural attachments to the vehicle body could produce inconsistent dummy readings because of the varying dummy head/body kinematics and the head not consistently contacting the approaching 254 mm (10-inch) pole.

Comments are requested on the appropriateness and practicability of using the 75-degree angle of approach as well as the 90-degree impact angle now used in the optional pole test of FMVSS No. 201.

3. Positioning the Seat and Impact Reference Line

50th percentile male dummy. In the oblique pole test, an impact reference line would be placed on the exterior of the vehicle at the intersection of the vehicle exterior and a 75-degrees (or 285-degrees, for front passenger side) vertical plane passing through the center of gravity of the head of the driver (or passenger) dummy seated in the front outboard designated seating position. The 50th percentile male test dummy and the front vehicle seat would be positioned along the seat track as the dummy and front seat are positioned in the MDB test of FMVSS No. 214. (As noted below, the agency is also considering positioning the dummy and vehicle seat along the seat track using the FMVSS No. 201 seating procedure.) Under the FMVSS No. 214 procedure, the vehicle seat is positioned mid-track fore-and-aft. (This provision would only apply to the front seat, as the pole test would not apply to the rear seat.)

NHTSA test data indicate that the FMVSS No. 201 and FMVSS No. 214 seating procedures can result in different HIC measurements when using the SID–H3 dummy (see Table 4, *infra*). When a 1999 Volvo S–80 was tested in an oblique pole test with a SID–H3 50th percentile dummy, the HIC was 2,213 when the FMVSS No. 201 seating position was used, as opposed to 395 when the FMVSS No. 214 seating position was used. The side air bag system in the Volvo was an air curtain and thorax bag. Similarly, when a 2000 Saab was tested obliquely with the SID–H3 50th percentile male dummy, the HIC was 5,155 using the FMVSS No. 201 seating procedure, as opposed to 182 using the FMVSS No. 214 seating position. The Saab's side air bag system was a combination bag. Compared to the FMVSS No. 201 seating position, the FMVSS No. 214 seating position can place the dummy rearward and closer to the B-pillar. Since the production side air bag system was wide enough to cover the dummy head trajectory in this seating position, the HIC values were significantly lower in these oblique tests.

However, when the ES–2re dummy was used, differences in HIC were not so pronounced. The HIC score for the 1999 Volvo S–80 was 465 when using the FMVSS No. 201 procedure, as opposed to 329 when the dummy was seated according to FMVSS No. 214 seating specifications. The HIC for the Saab was 243 using FMVSS No. 201 seating procedure, and 171 using the FMVSS No. 214 procedure. The difference between the results of the two dummies is due to small differences in the dummy head/neck/shoulder kinematics and the tuning of current head protection air bag systems to provide limited coverage in lateral impacts. In both the Volvo S–80 and the Saab oblique pole tests with the ES–2, the deploying air bag lifted the articulated arm upward and inboard and the head bent laterally and contacted the bag along a main air chamber. In the case of the two oblique pole tests with the SID–H3, the dummy had rotated slightly forward and contacted the bag systems at a more forward section, resulting in contact with the intruding pole in the case of the Saab. It is also noted that air curtains are currently designed for the FMVSS No. 201 pole test, in which the SID–H3 dummy is used. In some cases, the air curtain might not be large enough to provide coverage to the SID–H3 dummy in an oblique crash.

Rib deflection measurements differed slightly when the different seating positions prescribed in FMVSS No. 201 and No. 214 were used in the Volvo. Rib deflections were 40.70 mm (1.6 in) and 48.6 mm (1.91 in) when the FMVSS Nos. 201 and 214 procedures, respectively, were used. (The 48.6 mm rib deflection value obtained when the FMVSS No. 214 procedure was used would not meet this NPRM's proposed criterion of 44 mm.) Chest deflections did not differ significantly in the Saab in dummies positioned according to the FMVSS No. 201 and FMVSS No. 214 procedures (49.9 mm (1.96 in) versus 49.4 mm (1.94 in)).

We have tentatively decided to use the FMVSS No. 214 seating procedure for the vehicle-to-pole test proposed today. The FMVSS No. 201 procedure is appropriate for that standard's pole test in order to place the SID–H3's head in the window opening, thus ensuring contact with a deploying head air bag and eliminating head interaction with the B-pillar.[25] In the context of FMVSS No. 201, isolating the head air bag in this manner evaluates the effectiveness of the head air bag, which accords with the goal of that standard. An air bag in FMVSS No. 201, though optional, would provide more protection than any interior component protected by padding or other energy-absorbing material. However, an air bag designed to meet the current proposal would offer more protection over a larger area and therefore, is expected to be more effective and yield more safety benefits than the air bags offered under the optional pole test requirement in FMVSS No. 201.

Using the FMVSS No. 214 seating procedure has certain advantages when used in the oblique pole test. First, many mid-size occupants might use the mid-track position more typically than the one closer to the steering wheel specified under FMVSS No. 201. Second, using the FMVSS No. 214 procedure positions the 50th percentile male dummy further back towards the B-pillar than the FMVSS No. 201 seating procedure. By having the 50th percentile male dummy sitting at that position and the 5th percentile female dummy sitting full forward, the agency can ensure a test of as wide an area as possible. The agency believes that rearward positioning of the 50th percentile male dummy and the much further forward seat position for the 5th percentile female dummy (and the lower position of the 5th percentile female dummy's head) would result in head air bag designs that provide head protection through much or all of the window opening area. For these reasons, the agency is proposing to use the FMVSS No. 214 seating procedure for the 50th percentile male dummy in the oblique pole test. The agency seeks comments on which seating position (FMVSS No. 201 versus No. 214) is appropriate.

[25] While the shoulder of the SID–H3 could interfere with the chest reading in the perpendicular test, FMVSS No. 201 does not specify chest injury criteria.

5th percentile female dummy. The procedures for determining the impact reference line for the test using the 5th percentile female dummy would be similar to that discussed above for determining the line when using the male dummy.

Dummy positioning would differ, in that the female dummy would be positioned in the vehicle seating position in the manner described in S16.3.2 to S16.3.5 of FMVSS No. 208. That is, the dummy would be seated with the seat track in the full forward position. The agency tentatively concludes that a properly designed inflatable system should and can provide protection in that location.

b. Dummies and Injury Criteria

1. 50th Percentile Male Dummy (ES–2re)

Crash data indicate that the 50th percentile male dummy is generally representative of the height and weight of occupants injured in collisions with passenger vehicles and with narrow objects.[26] The median height and weight of the injured occupants in crashes with passenger cars (on the struck side of a vehicle) are 1,701 mm (67 inches) and 72.1 kg (159 lb), and 1,701 mm (67 inches) and 71.2 kg (159.5 lb) in collisions with LTVs. The median height and weight of the injured occupants in crashes with narrow objects are 1,715 mm (67.5 inches) and 72.3 kg (159.5 lb). Nearly 59 percent of all MAIS 3+ injuries occurred to occupants in the medium height stature category.

As noted earlier, there are now improved test dummies that represent the 50th percentile male better than the SID. In 2000, NHTSA granted in part a petition for rulemaking from the AIAM, the Insurance Institute for Highway Safety, and the organization then called the American Automobile Manufacturers Association. The petitioners asked NHTSA to examine replacing the SID with an enhanced side impact dummy (see section IV(i), above). The petitioners suggested that NHTSA replace the SID with a test dummy (EuroSID–1) used in a European side impact standard (EU/96/27/EC). Although the agency concluded that EuroSID–1 had problems in measuring chest deflections accurately because of ''flat topping'' of responses, which rendered it unsuitable for use in FMVSS No. 214, we granted this part of the petition because we anticipated that the problems could be cured and that a dummy technically superior to the SID could be incorporated into FMVSS No. 214. (''Flat topping'' refers to sustained peaks (plateaus of flat-tops) in plots of the dummy's rib displacements over time. NHTSA observed sustained peaks as long as 15 milliseconds in rib displacement curves in tests using the EuroSID–1. ''Comparative Performance Testing of Passenger Cars Relative to FMVSS 214 and the EU 96/EC/27 Side Impact Regulations: Phase 1'', Samaha et al, Paper No. 98–S8–O–08, 16th International Technical Conference on the Enhanced Safety of Vehicles, Windsor, Canada 1998. Rib deflection flat tops were deemed to be of concern, especially at low levels of deflection, as they can be an indication that the rib deflection mechanism is binding and thus the thorax is not responding correctly to the load from the intruding side structure. Accordingly, the resulting peak deflections would be of questionable usefulness as injury indicators.) Users of the dummy in Europe subsequently determined that the EuroSID–1 design allowed a spurious load path through the back plate in the dummy and thus transferred chest loads through the back plate, giving erroneous chest deflection readings.

The problems of the EuroSID–1 appear to have been eliminated with the evolution of the dummy into the ES–2 side impact dummy and the subsequent changes made with respect to the ES–2's rib design. The ES–2re dummy is more biofidelic than SID and offers more injury measurement capabilities than the present side impact dummy. Thus, using this improved dummy would enhance the protection afforded by vehicles to the affected population, especially those represented by a 50th percentile male dummy.[27]

A. Background

The ES–2 dummy evolved from the EuroSID and EuroSID–1 dummies. EuroSID existed when NHTSA adopted the dynamic moving deformable barrier test into FMVSS No. 214 in 1990. However, when the agency examined the dummy, NHTSA determined that EuroSID suffered from a number of technical problems involving ''flat topping,''[28] biofidelity, reproducibility of results, and durability. Because of these limitations, in 1988 NHTSA decided against adopting EuroSID and instead adopted SID as the test device used in the dynamic FMVSS No. 214 test.

The EuroSID was developed in the 1980s, and a revised version known as EuroSID–1 is currently specified as the test dummy to be used in ECE Regulation No. 95 and European Union (EU) Directive 96/27/EC (hereinafter EU 96/27/EC) for side impact testing. As noted above, in 1996, Congress asked NHTSA to consider whether the dynamic side impact provisions of the European side impact regulation, including those specifying use of the EuroSID–1 dummy, were at least functionally equivalent to those in FMVSS No. 214. NHTSA developed and provided Congress with its side impact harmonization plan[29] that set forth

[26] NHTSA analyzed 1991–2000 NASS cases involving (1) AIS 3 and greater injured occupants in near side impacts, (2) non-rollover tow-away side crashes without complete ejections, and (3) occupants with a height of 1,422 mm (56 inches) or greater. There were a total of 1,965 cases: 1,073 male occupants, 891 female occupants, and one with unknown gender. The injury distribution was 775 fatalities and 1,190 seriously injured. These cases were annualized to national estimates. The analysis was performed with respect to three parameters—(1) gender (male and female), (2) body heights (short, medium, and tall categories), and (3) MAIS 3 and greater injured body regions (head, chest, abdomen, and others). (''Medium height'' was the middle of all occupant height/weight as studied.)

[27] The Alliance of Automobile Manufacturers, the Association des Constructers Europeens d'Automobiles and the Japan Automobile Manufacturers Association wrote an October 16, 2002 letter to NHTSA urging the agency to ''actively participate in the final development of WorldSID with the intention of specifying this device in a future upgrade to FMVSS 214.'' NHTSA supports the continuous improvement of test dummies. However, the agency will not delay this rulemaking to wait for the WorldSID. In the agency's best estimate, it will take a considerable amount of time to complete the evaluation of the WorldSID for its usefulness in vehicle tests, to determine its ability to project the risk of occupant injury, and to implement its use into FMVSS No. 214 compliance testing. In contrast, based on worldwide use experience of the EuroSID–1 and considerable experience with the ES–2, the rulemaking to incorporate the ES–2re dummy into Part 572 can be initiated in 2004. Since the dummy is available now for use in side impact testing, we estimate that the ES–2re could serve the need for an upgraded anthropomorphic test device (ATD) until the final development and implementation of the WorldSID. This assumes, of course, that WorldSID would ultimately be found to be suitable for use in FMVSS No. 214 and that the agency would decide through notice-and-comment rulemaking that its use in compliance testing is appropriate.

[28] The preamble to NHTSA's final rule adopting its current side impact dummy (SID) noted that the agency found that the EuroSID dummy had problems with flat topping. The agency stated, ''[o]ne of the problems discovered in NHTSA's EuroSID sled tests was that the ribs were bottoming out, which may have invalidated the V*C measurements being made. This condition was characterized by a flat spot on the displacement-time history curve, while the acceleration-time history curve showed an increase with time until the peak g was reached. Although considerable attempts were made to correlate V*C and TTI(d), the deflection data collected continue to be questionable.'' 55 FR 45757, 45765 (October 30, 1990).

[29] ''Report to Congress: NHTSA Plan for Achieving Harmonization of the U.S. and European Side Impact Standards,'' April 1997; ''Report to Congress: Status of NHTSA Plan For Side Impact Regulation Harmonization and Upgrade,'' March 1999. NHTSA Docket No. 1998–3935–1 and –10 of the DOT Docket Management System at *www.dms.dot.gov/*.

NHTSA's planned research to evaluate the functional equivalence of the two standards and later, by update, the results of that research. NHTSA performed a series of crash tests of FMVSS No. 214 compliant vehicles using the EU test procedures and the EuroSID–1 dummy.

A main finding was that in all tests conducted, data for dummy rib deflections indicated flat topping. With flat topping, the resulting rib deflections and the V*C computations,[30] which are based on the rib deflection, are suspect. Due to this anomaly and others in the measurements obtained with the European dummy, the agency determined that it was not possible to generate the data necessary to determine whether the European standard and its requirements are at least functionally equivalent to the provisions in FMVSS No. 214. The data did show, however, that the EuroSID–1 dummy was not suitable for use in FMVSS No. 214.

Since that time, the EuroSID line of dummies has made steady progress toward resolving these issues, with the ES–2re being the latest version. The ES–2 was designed to overcome the concerns raised by NHTSA and users of the dummy worldwide.[31] Beyond flat topping, concerns had been raised about the projecting back plate of the dummy grabbing into the seat back, upper femur contact with the pubic load cell hardware, binding in the shoulder assembly resulting in limited shoulder rotation, and spikes in the pubic symphysis load measurements associated with knee-to-knee contact. To address these concerns, the dummy manufacturer installed hardware upgrades in the ES–2, including an improved rib guide system in the thorax, a curved and narrower back plate, a new attachment in the pelvis to increase the range of upper leg abduction and inclusion of rubber buffers, a high mass flesh system in the legs, and beveled edges in the shoulder assembly.

The ES–2's back plate continued to grab the seat back in some of NHTSA's tests, despite the dummy manufacturer's initial efforts to address the problem by reducing the size and shape of the back plate. The dummy manufacturer was able to solve the flat topping problem by redesigning the rib module. The back plate problem was solved by adding rib extensions, *i.e.*, replacement ribs that extend from the lateral portion of the non-struck thorax, around the sternum and struck-side, and end at the posterior aspect of the spine. The extended ribs provide a continuous loading surface that nearly encircles the thorax and enclose the posterior gap of the ES–2 ribcage. According to NHTSA's test data, these ''rib extensions'' reduce to a great extent the back plate grabbing force that had the effect of lowering rib deflection responses in tests. The rib extensions also do not appear to affect the dummy's rib deflection responses in tests in which high back plate loads did not occur.

The ES–2 dummy has not yet supplanted the EuroSID–1 dummy in Europe or elsewhere for use in regulations as of this time. However, based on a proposal from the Netherlands, the UN/ECE's Working Party on Passive Safety (GRSP) has recommended to the WP.29 that ECE Regulation No. 95 be amended to use the ES–2 dummy in place of the EuroSID–1.[32] The GRSP's proposal takes into account the modifications that NHTSA has done to ES–2 to fix the back plate problem, as well as other minor outstanding technical problems raised by other participants. If this is adopted, the European Union is expected to also amend its Directive 96/27/EC to use the ES–2 dummy.

Using the ES–2re in FMVSS No. 214 would also accord with the practices of the non-governmental European New Car Assessment Program (EuroNCAP) on side impact. EuroNCAP began using the ES–2 dummy with the injury criteria specified in EU 96/27/EC in February 2003.

In light of the above modifications and the anticipated benefits of this dummy, NHTSA believes that the ES–2re merits consideration for incorporation into Part 572 and for use in FMVSS No. 214 testing. Based upon the ES–2re's superior biofidelity and added measurement capabilities for injury assessment of many body regions and associated instrumentation, we have tentatively decided that the ES–2re is the preferred option for the 50th percentile male dummy. As part of a separate rulemaking action, NHTSA is currently in the process of ''Federalizing'' the ES–2re dummy. A technical report and other materials describing the ES–2re in detail have been placed in the Docket for today's NPRM. A proposal to incorporate the specifications for the ES–2re in Part 572 will be published shortly in the **Federal Register**.

Biofidelity, Repeatability and Reproducibility. Biofidelity is a measure of how well a test device duplicates the responses of a human being in an impact. The Occupant Safety Research Partnership and Transport Canada conducted biomechanical testing on the ES–2 dummy. Byrnes, *et al.*, ''ES–2 Dummy Biomechanical Responses,'' 2002, Stapp Car Crash Journal, Vol. 46, p. 353. Biomechanical response data were obtained by completing a series of drop, pendulum, and sled tests from the International Organization of Standardization (ISO) Technical Report 9790. Full scale tests were also conducted. For the ISO rating system, a dummy with a higher biofidelity rating responds much more like a human subject. The overall dummy biofidelity rating was determined to be ''fair,'' at 4.6, an improvement over the SID and Eurosid–1 (which received ratings classifications of 2.3 and 4.4, respectively).

The agency also used the biofidelity ranking system developed by Rhule, et al., ''Development of a New Biofidelity Ranking System for Anthropomorphic Test Devices,'' 2002, Stapp Car Crash Journal, Vol. 46, p. 477. The assessment included the dummy's External Biofidelity (how much like a human the dummy loads the vehicle components) and Internal Biofidelity (how much like a human the dummy measures injury criteria measurement responses and is calculated for those body regions that have an associated injury criterion). The Overall External and Internal Biofidelity ranks are an average of each of the external and internal body region ranks, respectively. A lower biofidelity rank indicates a more biofidelic dummy. A dummy with an External Biofidelity rank of less than 2.0 responds much like a human subject. The ES–2re dummy had an Overall External Biofidelity rank of 2.6, compared to 2.7 for the ES–2 and

[30] V*C, viscous criterion, is another way of measuring thoracic injury. It is based upon the product of chest compression and the rate of compression.

[31] On March 11, 2002, Nissan made a presentation to NHTSA on sled test results that Nissan believed showed back plate loading in the ES–2. Docket NHTSA–99–7381.

[32] The UN/ECE World Forum for Harmonization of Vehicle Regulations (WP.29) administers several agreements relating to the global adoption of uniform technical regulations. An agreement, known as the 1958 Agreement, concerns the adoption of uniform technical prescriptions for wheeled vehicles, equipment and parts and the development of motor vehicle safety regulations for application primarily in Europe. UN-member countries and regional economic integration organizations set up by UN country members may participate in a full substantive capacity in the activities of WP.29 by becoming a Contracting Party to the Agreement. Various expert groups (*e.g.*, the GRSP) within WP.29 make recommendations to WP.29 as to whether regulations should be adopted by the Contracting Parties to the 1958 Agreement. Under the 1958 Agreement, new Regulations and amendments to existing Regulations are established by a vote of two-thirds majority of Contracting Parties. The new Regulation or amendment becomes effective for all Contracting Parties that have not noticed the Secretary-General of their objection within six months after notification.

3.8 for the SID–H3. Its overall internal biofidelity rank was 1.6.

The ES–2re dummy's repeatability and reproducibility were determined on the basis of component tests and sled tests of the two dummies. The component tests were conducted on head, neck, shoulder, upper rib, middle rib, lower rib, abdomen, lumbar spine and pelvis body regions. The repeatability assessment was made in terms of percent CV (Coefficient of Variance). A CV value of less than 5 percent is considered excellent, 5–8 percent good, 8–10 percent acceptable, and above 10 percent unacceptable. Nine tests were performed with one of the dummies, and 7 tests were performed with the other. The reproducibility was established by comparing the average responses of both dummies. The reproducibility assessment was made in terms of response differences between the two dummies with respect to the mean. A difference of less than 5% is considered excellent, 5–8% good, 8–10% acceptable, and above 10% unacceptable. The results of the tests indicate ''excellent'' repeatability and reproducibility ratings for all components except for the pelvis, which has a ''good'' rating. For a complete discussion of these tests, interested persons should consult the technical paper entitled ''Technical Report—Design, Development and Evaluation of the ES–2re Side Crash Test Dummy,'' which has been placed in the agency's docket.

B. Injury Criteria

In assessing the suitability of a dummy for side impact testing, it is necessary to consider its injury assessment capabilities relative to human body regions at risk in the real world crash environment. Crash data indicate that FMVSS No. 214 should encourage vehicle designs that protect not only an occupant's head, but also other body regions in the vehicle-to-pole test. Accordingly, injury criteria are being proposed for the head, thorax, abdomen, and pelvis. A technical report titled, ''Injury Criteria for Side Impact Dummies,'' and the agency's Preliminary Economic Assessment for this NPRM, have a full discussion of these injury criteria and supporting data. (Both documents are available in the docket.)

The types of injury criteria proposed by NHTSA are generally consistent with those developed by ECE/WP.29, by the European Union in its directive EU 96/27/EC, and by EuroNCAP for rating vehicles, although some may differ, based upon the results of NHTSA testing. Four of NHTSA's proposed injury criteria are specified in EU 96/27/EC for use with the EuroSID–1 dummy. NHTSA has tentatively decided not to use the chest viscous injury criteria, $V*C \leq 1.0$. NHTSA has not found the V*C criterion to be repeatable and reproducible in the agency's research.

While the ES–2 is an upgraded EuroSID–1 dummy, rather than an entirely new dummy, we have concluded that the thorax of the ES–2 is so different from that of the predecessor dummy that previously-generated EuroSID–1 data should not be considered in analyzing the ES–2 and its associated thoracic injury criteria. The flat topping and other problems of the EuroSID–1 make those earlier data of little value to researchers in analyzing the ES–2. Consequently, in developing the criteria discussed below, NHTSA limited its analysis to existing ES–2 data and our own research conducted with the ES–2re. The agency believes that these two data sets are interchangeable, except for ES–2 data affected by the back plate problem. Based upon our assessment of these dummies, we believe that the ES–2 with rib extension modifications is superior to the unmodified version. Accordingly, the agency is proposing use of the ES–2re with the following injury criteria.

Head: NHTSA is proposing to require passenger cars and LTVs to limit HIC to 1000 (measured in a 36 millisecond time interval) when the ES–2re dummy is used in the proposed 32 km/h (20 mph) oblique vehicle-to-pole test (and the MDB test). This measure has been chosen because the HIC_{36} 1000 criterion is consistent with the optional pole test designed to afford head protection under FMVSS No. 201. The HIC_{36} 1000 criterion provides a measure with which the agency and the industry already have experience. HIC_{36} 1000 relates to a 52 percent risk of AIS 3+ injury.

Thorax (Chest): NHTSA has proposed two criteria to measure thoracic injury when using the ES–2re. First, chest deflection shall not be greater than 42 mm (1.65 in) for any rib (reflecting an approximate 50 percent risk of an AIS3+ injury). We note that our proposed requirement is harmonized with the EU regulation for the EuroSID–1.[33] However, the agency is also considering, and seeking comment on, an alternative chest deflection criterion within the range of 35–44 mm (1.38–1.73 in). This range corresponds to an approximate 40–50 percent risk of AIS3+ injury. Second, resultant lower spine acceleration shall not be greater than 82 g's (reflecting a 50 percent risk of an AIS3+ injury).

The agency believes that a combination of the two criteria is appropriate to provide thoracic injury protection to vehicle occupants. NHTSA tentatively selected these two criteria based upon a series of 42 side impact sled tests using fully instrumented human cadaveric subjects and 16 sled tests using the ES–2re conducted at the Medical College of Wisconsin. NHTSA conducted the analysis using logistic regression with injury outcome in cadaveric sled tests as the response, and ES–2 dummy measured physical parameters (maximum rib deflections, TTI, maximum spinal accelerations) in similar sled tests as the covariates. The subjects' anthropometric data such as age, gender, and mass were also included as covariates since the agency believed that they might influence injury outcome.[34] This method of analysis provided injury criteria that can directly be applied to the ES–2re dummy.

Chest deflection has been shown to be the best predictor of thoracic injuries in low-speed crashes. We believe it to be a better injury risk measure than TTI(d) for the ES–2re dummy.[35] We added spinal acceleration criteria because we believe that there might be injurious loading conditions that are not picked up by the rib deflections measured on the ES–2re dummy, and spinal accelerations are a good measure of the overall load on the thorax. The

[33] Based on an analysis of the limited thoracic force-deflection cadaver data available in the 1980's, the U.S. Advisory Group of Working Group 6 of ISO indicated that a rib-to-spine deflection of 42 mm would correspond to a 50 percent risk of nine rib fractures. According to Dr. Tarriere from Renault, internal organ injuries and flail chest (AIS 4) would be more likely to occur if the number of rib fracture became higher than nine. Dr. Terriere indicated that we could exclude severe internal organ injuries by excluding the AIS 4 flail chest injury. Based on that reason, European groups concluded that the EuroSID–1 should be based on the risk of rib fractures and thus a rib deflection ≤ 42 mm. It should be pointed out that the said rib deflection criterion is a cadaver-based injury criterion for lower AIS level injuries, and that no transformation was made between the EuroSID–1 and the cadaver test data.

[34] Kuppa, S., Eppinger, R., McKoy, F., Nguyen, T., Pintar, F., Yoganandan, Y., ''Development of Side Impact Thoracic Injury Criteria and Their Application to the Modified ES–2 Dummy with Rib Extensions (ES–2re), Stapp Car Crash Journal, Vol. 47, October, 2003.

[35] TTI(d), a chest acceleration-based criteria, when combined with anthropometric data, was developed by NHTSA (Eppinger, R. H., Marcus, J. H., Morgan, R. M., (1984), ''Development of Dummy and Injury Index for NHTSA's Thoracic Side Impact Protection Research Program,'' SAE Paper No. 840885, Government/Industry Meeting and Exposition, Washington, DC; Morgan, R. M., Marcus, J. H., Eppinger, R. H., (1986), ''Side Impact—The Biofidelity of NHTSA's Proposed ATD and Efficacy of TTI,'' SAE Paper No. 861877, 30th Stapp Car Crash Conference) and is included in the FMVSS No. 214 side impact protection standard.

acceleration at the lower spine (''lower spine acceleration'') is also a measure that is less sensitive to direction of impact. Consequently, in concert, the two thoracic criteria will enhance injury assessment in a vehicle side crash test, and we expect them (and their associated reference values) to result in reduced chest injuries as compared to the criteria in the current standard.

While we have tentatively selected 42 mm as the deflection criterion, we are also considering a chest deflection limit within the range of 35–44 mm (1.38–1.73 in). NHTSA reanalyzed the Eppinger data set that was used when NHTSA undertook the rulemaking adopting the MDB test into FMVSS No. 214 in 1990 (see preceding footnote concerning TTI(d)). The agency analyzed the injury risk curve versus TTI(d) and estimated that a rib deflection of 44 mm (1.73 in) for the ES–2re would be approximately equivalent to a TTI(d) of 85 g's for the SID.[36] (A TTI(d) limit of 85 g's is specified in the MDB test of FMVSS No. 214 for 4-door vehicles.) The 44 mm (1.73 in) value corresponds to a 50 percent risk of injury for a 45-year-old occupant.[37] Data from NASS indicates that chest is still the predominant seriously injured body region and that serious chest injuries are prevalent in the modern vehicle fleet. A deflection limit of 35 mm, reflecting a 40 percent risk of an AIS 3+ injury, could markedly improve the chest protection afforded by FMVSS No. 214.

The proposed limit for resultant lower spine acceleration would be 82 g. The upper and lower spine of the ES–2re are instrumented with tri-axial accelerometers (x, y, and z direction corresponding to anterior-posterior, lateral medial, and inferior-superior). In purely lateral loading, one would expect only lateral (y) accelerations. Moreover, due to constraints built into their designs, the dummies exhibit predominantly y (lateral) acceleration due to lateral loading. In the side impact sled tests at the Medical College of Wisconsin (MCW), described above, the dummy's lower spine accelerations were almost the same as the resultant acceleration (sqrt($x^2+y^2+z^2$)) since x and z accelerations are small. However, due to the complex response of humans, vehicle occupants experience x, y, z accelerations even in pure lateral loading. In vehicle crashes, loading can be in various directions. Therefore, NHTSA believes that to account for overall loading, resultant accelerations should be considered rather than lateral acceleration alone.

Abdomen: The ES–2re dummy offers abdominal injury assessment capability, a feature that is not present in the SID dummy. The agency is proposing an abdominal injury criterion of 2,500 Newtons (N) (562 pounds). We note that our proposed requirement is harmonized with the abdominal load injury criterion used in the European side impact regulation, EU 96/27/EC, as well as the EuroNCAP Program for the EuroSID–1. However, the agency is also considering, and seeking comment on, an alternative abdominal injury criterion within the range of 2,400–2,800 N (540–629 pounds). This range corresponds to an approximate 30–50 percent risk of AIS 3+ injury. The proposed abdominal injury criterion was developed using cadaver drop test data from Walfisch, *et al.* (1980).[38] Analysis of this data indicated that applied force was the best predictor of abdominal injury, and an applied force of 2,500 N (562 pounds) corresponds to a 33 percent risk of AIS 3+ injury. The MCW sled test data indicated that the applied abdominal force on the cadavers was approximately equal to the total abdominal force in the ES–2re dummy under similar test conditions.

This abdominal capability of the ES–2re is a potentially significant advantage over the SID dummy, and requiring vehicles to satisfy this injury criterion to meet FMVSS No. 214 might reduce the number of abdominal injuries to the driving population. In a NASS study of side impact crashes, it was estimated that between 8.5 percent and 21.8 percent of all AIS 3+ injuries are to the abdomen of restrained near side front seat occupants.[39] The SID dummy currently used in FMVSS No. 214 does not have these detection capabilities, thus leaving a gap in the control of injury outcomes in side crashes.

Pelvis: NHTSA is proposing a pelvic force limit of not greater than 6,000 N (1,349 pounds) (25 percent risk of AIS3+ injury). The ES–2re has two pelvic measurement capabilities. First, the ES–2re has instrumentation to measure pelvic acceleration, as does the SID dummy. However, unlike the SID, the ES–2re is also capable of measuring the force (load) at the pubic symphysis, which is the region of the pelvis where the majority of injuries occur. A field analysis of 219 occupants in side impact crashes by Guillemot, *et al.* (1998) showed that the most common injury to the pelvis was fracture of the pubic rami (pelvic ring disruption).[40] Pubic rami fractures are the first to occur because it is the weak link in the pelvis.

This NPRM would only limit pubic symphysis force. The agency is not proposing an acceleration-based criterion because the agency believes that an injury threshold limit on pelvic acceleration is dependent on the impact location and the type of loading (distributed versus concentrated). Therefore, pelvic acceleration is not as good a predictor of pelvic fracture as force. The scientific literature has documented that force alone is a good predictor of pelvic injury.[41] Further, the pubic symphysis load injury criterion has been applied in the European side impact regulation EU 96/27/EC as well as the EuroNCAP Program, so there is experience with this measure and some demonstration of its usefulness. The criterion in those programs is 6,000 N (1,349 pounds), the same limit that we are proposing here.

The proposed injury criteria and limits are summarized below in Table 2:

[36] Kuppa, S., Eppinger, R., McKoy, F., Nguyen, T., Pintar, F., Yoganandan, Y., ''Development of Side Impact Thoracic Injury Criteria and their Application to the Modified ES–2 Dummy with Rib Extensions (ES–2re), Stapp Car Crash Journal, Vol. 47, October, 2003.

[37] Logistic regression analysis using cadaver injury and anthropometry information along with the ES–2 measurements indicate that the age of the subject at the time of death had a significant influence on the injury outcome ($p<0.05$). *Id.*

[38] Walfisch, G., Fayon, C., Terriere, J., *et al.*, ''Designing of a Dummy's Abdomen for Detecting Injuries in Side Impact Collisions, 5th International IRCOBI Conference, 1980.

[39] Samaha, R.S., Elliot, D., ''NHTSA Side Impact Research: Motivation for Upgraded Test Procedures,'' Proceedings of the 18th Enhanced Safety of Vehicles (ESV) Conference (2003).

[40] Guillemot H., Besnault B., Robin, S., *et al.*, ''Pelvic Injuries In Side Impact Collisions: A Field Accident Analysis And Dynamic Tests On Isolated Pelvic Bones,'' Proceedings of the 16th ESV Conference, Windsor (1998).

[41] Bouquet, *et al.* (1998) performed cadaver pendulum impact tests and showed that the pubic symphysis load cell in the EuroSID–1 dummy was a good predictor of pelvic fracture. *See* Bouquet, R, Ramet, M, Bermond, F, Caire, Y, Talantikite, Y, Robin, S, Voiglio, E, ''Pelvis Human Response to Lateral Impact,'' Proceedings of the 16th Enhanced Safety of Vehicles (ESV) Conference (1998).

TABLE 2.—PROPOSED INJURY CRITERIA FOR ES–2RE

Criterion	HIC_{36}	Rib-Def. (mm)	Lower spine (g)	Abd.-force (N)	Public-force (N)
Proposed Limits	1,000	* 35–44	82	* 2,400–2,800	6,000

* A particular value within this proposed range would be selected.

C. Oblique Pole Tests With ES–2 and ES–2re

NHTSA has conducted four 32 km/h (20 mph) oblique pole tests using the FMVSS No. 214 seating procedure and the ES–2re dummy. The agency has conducted five additional tests using the FMVSS No. 201 seating procedure. The first four tests were with the ES–2 dummy and the fifth test was with the ES–2re dummy. The test results are presented in Table 3.

TABLE 3.—75-DEGREE POLE TEST RESULTS ES–2 DUMMY OR ES–2RE DUMMY (USING FMVSS NO. 214 SEATING POSITION)

Test vehicle	Restraint *	HIC_{36}	Rib-def (mm)	Lower spine (g)	Abd.- force (N)	Public-force (N)
Using FMVSS No. 214 seating position						
Proposed limits		1,000	35–44	82	2,400–2800	6,000
1999 Volvo S80 **	AC+Th	329	48.7	51.2	1,550	1,130
2000 Saab 9–5 **	Comb	171	49.4	49.0	1,370	1,730
2004 Honda Accord **	AC+Th	446	30.7	51.7	1,437	2,463
2004 Toyota Camry **	AC+Th	452	43.4	52.5	1,165	1,849
Test Results Using FMVSS No. 201 Seating Position						
1999 Nissan Maxima	Comb	5,254	35.7	45.1	1,196	2,368
1999 Volvo S80	AC+Th	465	40.7	51.4	1,553	1,700
2000 Saab 9–5	Comb	243	49.9	58.3	1,382	2,673
2001 Saturn L200	AC	670	52.3	78.2	1,224	2,377
2002 Ford Explorer **	AC	629	43.0	98.4	2,674	2,317

* Comb.=combination head/chest SIAB; AC=air curtain; Thorax or Th=chest SIAB
** Test was conducted with the ES–2re dummy.

Table 3 shows that vehicles with air curtain systems performed well in protecting the dummy's head. The head/chest side air bag of the 2000 Saab 9–5 also passed the limit on HIC. However, the head/chest side air bag of the 1999 Nissan Maxima did not perform well (the HIC score was 5,254).

The agency's tests of the Maxima illustrate how the impact angle of the pole test can influence the level of protection provided by a vehicle's side air bags. NHTSA conducted three oblique pole tests using a Maxima without a side bag for the purpose of demonstrating test repeatability of the oblique pole test procedure. As previously mentioned, the HIC score for a Maxima vehicle with a head/chest side impact air bag was 5,254 (results presented in Table 3, above), while the HIC scores for Maxima cars without a side air bag head protection system ranged from 11,983 to 15,591. Although the combination side impact air bag system in the Maxima reduced the HIC by up to 66 percent to 5,254, the HIC level was nevertheless high enough to have caused fatal injuries. On the other hand, the results of the test of the Maxima vehicle in a 90-degree FMVSS No. 201 pole test (Table 6, infra) showed successful results with a HIC score of 130.

The 75-degree impact produces a different dummy head trajectory. Judging from the film coverage of the Maxima test, in the oblique pole test, the combination SIAB in the Maxima did not prevent the occupant head from rotating into the pole.[42] In order to comply with the proposed oblique pole test requirements, NHTSA expects that manufacturers will install head protection systems extending sufficiently toward the A-pillar to protect the head in the 75-degree approach angle test. Further, the proposed 32 km/h (20 mph) oblique pole test has a lateral component of 31 km/h (19.3 mph). Thus, it has at least 15 percent[43] more kinetic energy than the FMVSS No. 201 90-degree pole test at 18 mph.

In the four tests using the FMVSS No. 214 seating position, the ES–2re rib deflection exceeded the maximum deflection in the proposed range (*i.e.*, 44 mm or 1.73 in) in half of the vehicles tested. The ES–2re rib deflection was exceeded in both tests of the 1999 Volvo and 2000 Saab vehicles. All of the vehicles in this series were equipped with thorax air bags of some type. Of the two vehicles that met the rib deflection criteria, the 2004 Toyota Camry test was very close to the proposed upper 44 mm (1.73 in) limit with a rib deflection of 43.4 mm (1.71 in). However, the other vehicle, the 2004 Honda Accord, met the lowest proposed rib deflection criteria with more than 4 mm to spare. Thus, the Accord demonstrates the practicability of meeting the proposed requirements using the FMVSS No. 214 seating procedure.

In the five tests using the FMVSS No. 201 seating position, the ES–2 rib deflection exceeded the proposed upper limit of 44 mm (1.73 in) in one of the two vehicles equipped with air curtains

[42] A copy of the film is available from the FHWA/NHTSA National Crash Analysis Center Film Library, 20101 Academic Way, Suite 203, Ashburn, VA 20147–2604. Telephone: 703–726–8236; Fax: 703–726–8358.

[43] The 15 percent increase in kinetic energy was computed by taking the difference in kinetic energy (1/2 mass*velocity ^{2}) for both velocities of 18 mph and 19.3 mph for a given vehicle and dividing it by the baseline kinetic energy at 18 mph. Since the mass of the vehicle is constant in this example, the percent increase in kinetic energy was approximated by the difference between (20 mph) ^{2} and (18 mph) ^{2} divided by (18 mph) ^{2}.

and no separate chest air bag (Saturn L200). The ES–2 rib deflection was also exceeded in one vehicle equipped with a combination head/chest side air bag (Saab 9–5). The three remaining vehicle tests (Nissan Maxima, Ford Explorer, and Volvo S80) did not result in rib deflection readings above the proposed upper limit. The Ford Explorer did, however, exceed the limits on lower spine acceleration and abdominal force, which might have been partially due to the fact that the vehicle only had an air curtain system and no thorax air bag. (See Table 3.)

D. Comparing the ES–2re to the SID–H3

NHTSA believes that the ES–2re and the SID–H3 would yield similar benefits in head protection. Of the two, NHTSA prefers the ES–2re for its overall superior biofidelity and additional injury assessment capability.

In comparing the biofidelity of the two dummies, the ISO and other researchers (Rhule, *et al.*, 2002) found that the ES–2re dummy demonstrates more human-like response than the SID–H3 in virtually every category examined.[44]

The agency believes that more effective and encompassing test tools should be used to assess the effectiveness of side impact countermeasures, particularly those involving head air curtains and either seat or door mounted air bags. The ES–2re, with the more human-like rib cage geometry, mass distribution, and telescopic rib compression mechanism, provides the capability of measurement of chest compression. It also has an abdomen that is a weighted deformable element with internal load cells to measure load transfer through to the spine. Given that abdominal injuries constitute up to 20 percent of all injuries in side impact, it is desirable that an ATD can assess this injury. Of lesser significance, but still of importance, is the ES–2re dummy's instrumentation of the pelvis. Besides acceleration, it permits the measurement of force through the iliac wing to the sacrum and pubic symphysis. [45]

However, as noted above, NHTSA is considering using the SID–H3, particularly if all of the injury measures available in ES–2re are not adopted in FMVSS No. 214. The SID–H3 has been used for years in the optional vehicle-to-pole test in FMVSS No. 201 and is acceptably biofidelic as a test device. While SID–H3 is not as advanced an ATD as the ES–2re, it can measure head acceleration and is still an improvement over the SID. HIC would be limited to 1,000 as it is now in FMVSS No. 201. TTI and pelvic acceleration would be limited as they are now specified for the SID in the MDB test. TTI(d) would have an 85g limit for 4-door vehicles and a 90g limit for 2-door vehicles. The pelvic acceleration would be limited to 130g.

NHTSA has conducted three oblique pole tests with the SID–H3 dummy using the FMVSS No. 201 seating procedure. Table 4 shows that all three vehicles tested with the SID–H3 dummy would not comply with one or more of the proposed injury criteria in that test.

TABLE 4.—75—DEGREE OBLIQUE POLE TEST RESULTS

[SID–H3 Dummy]

Test vehicle	Restraint*	HIC_{36}	TTI(d)	Pelvis-g
Using FMVSS No. 214 seating position				
Proposed Limits	.....	1,000	**85/90	130
1999 Volvo S80	AC+Th	395	49.0	59.1
2000 Saab 9–5	Comb	182	77.0	82.1
Using FMVSS No. 201 seating position				
1999 Volvo S80	AC+Th	2,213	57.0	55.7
2000 Saab 9–5	Comb	5,155	90.5	80.4
2002 Ford Explorer	AC	330	105.0	81.3

*Comb.=head/chest SIAB; AC=air curtain; Th=chest SIAB
**4-door/2-door.

The results of the first oblique pole test using the FMVSS No. 201 seating position exceeded the HIC–1000 criterion, the last test exceeds the TTI(d)–85 criterion, and the second test exceeded both the head and the chest injury criteria. The 1999 Volvo S–80 exceeded the HIC–1000 requirement by 1,213. In this oblique pole test with the SID–H3, using the FMVSS No. 201 seating procedure, the SID–H3's head contacted a joint area of the air curtain and the tether hardware. The air curtain apparently was not large enough to prevent a partial head-to-pole contact. In contrast, in the 90-degree pole test shown in Table 7, infra, of a Volvo S–80, the SID–H3's HIC score was 237. The HIC score of the SID–H3 in the oblique Saab test was 5,155. In the oblique pole test of the Saab, the SID–H3's head partially contacted the front upper edge of the combination head/chest air bag and then rotated into the pole. These HPS designs would likely need to be changed if an oblique pole test were adopted, and the SID–H3 dummy were used, to expand the contact area covered to prevent the SID–H3 dummy head from rotating into the pole.

It should be noted that when the aforesaid two tests were repeated using the FMVSS No. 214 seating procedure, the HIC scores were dramatically lower. Compared to the FMVSS No. 201 seating position, the FMVSS No. 214 seating position can place the dummy rearward and closer to the B-pillar. Since the production HPS was wide enough to cover the dummy head

[44] "Development of a New Biofidelity Ranking System for Anthropomorphic Test Devices" (Stapp Car Crash Journal, Vol. 46, November 2002, pp. 477–512).

[45] Another advantage of the ES–2re dummy is that it is equipped with an articulating arm that can be placed at the side of the thorax, where it acts as an interposer between the vehicle interior and the chest. The arm may also be positioned so that it is elevated, simulating the driving position for the driver, leaving the thorax exposed to direct contact by the vehicle door. The test procedures for the proposed oblique pole test specify elevating the arms of the dummy in the driver's seat, simulating the driving position. In contrast, the SID–H3 dummy's arm is built into the torso jacket and can only simulate the condition where the arm is down. Thus, to the extent that the ES–2re dummy's arm can be positioned in more than one way, that dummy is better able to simulate the results of a variety of side impact crashes.

trajectory in this seating position, the HIC values were significantly lower.

2. 5th Percentile Female Dummy (SID–IIsFRG)

NHTSA's analysis of side impact crash data found that nearly 35 percent of all MAIS 3+ injuries in near-side, non-rollover, tow-away side crashes occurred to small stature occupants (between 56–64 inches or 142–163 cm in height). Most of these (93 percent) were female. *Id.* The 1990–2001 NASS/CDS data also indicate that there are differences in the body region distribution of serious injuries between small and medium stature occupants that are seriously injured in these side collisions. The data suggests that small stature occupants have a higher proportion of head, abdominal and pelvic injuries than medium stature occupants, and a lesser proportion of chest injuries.

The SID–IIs 5th percentile female dummy has a mass of 44.5 kg (98 pounds) and a seated height of 790 mm (31.1 inches). The dummy is capable of measuring forces to the head, neck, shoulder, thorax, abdomen and pelvis body regions and measures compression of the thoracic region.[46] NHTSA proposes to use a modified version of the dummy in the oblique pole test to improve the real world protection of small stature occupants in side impacts.

A. Background

The development of a small, second generation side impact dummy was undertaken in 1993 by the Occupant Safety Research Partnership (OSRP) under the umbrella of the U.S. Council on Automotive Safety Research. There was a need for an ATD that would be better suited to help evaluate the biomechanical performance of advanced side impact countermeasures, notably air bags, for occupants that are smaller than the 50th percentile size male. Data from frontal testing for similar air bag exposures indicated that smaller dummies were generally subjected to higher loadings than the 50th percentile male dummies. The new dummy was named SID–IIs indicating ''SID'' as side impact dummy, ''II'' as second generation, and ''s'' as small. The OSRP completed the development of the SID–IIs as a beta prototype in late 1998.

The dummy was extensively tested in the late 1990s and early 2000 in vehicle crashes by Transport Canada, and to a limited extent by U.S. automobile manufacturers and suppliers and the IIHS. NHTSA began an extensive laboratory evaluation of the dummy in 2000. Initial testing revealed chest transducer mechanical failures and some ribcage and shoulder structural problems. NHTSA's Vehicle Research and Test Center modified the dummy's thorax in 2001 to incorporate floating rib guides (''FRG'') to better stabilize the dummy's ribs. It was visually observed in abdominal-loading sled tests of the SID–IIs that the ribs did not stay in place in some of the tests, which raised concerns regarding the accuracy of the acceleration and deflection measurements, as well as the durability of the ribs and the deflection potentiometers. NHTSA modified the shoulder and rib guide design to remove excessive vertical rib motion. A detailed discussion of these modifications is provided in a technical report entitled, ''Development of the SID–IIs FRG,'' Rhule and Hagedorn, November 2003, that has been placed in the docket for this NPRM.

NHTSA expects to publish a proposal to incorporate the specifications and calibration procedures for the 5th percentile female dummy in Part 572 in 2004. The agency has placed a technical report and other materials describing the dummy, as modified by NHTSA with floating rib guides, in the Docket for today's NPRM. The SID–IIs is well-known to industry and researchers since it has been produced and used for about 5 years and is extensively used by Transport Canada, by IIHS in its consumer ratings program of vehicles' side impact performance with a moving barrier, and by industry to meet industry standards with respect to the safety performance of side air bags and with respect to the risks of side air bags to out-of-position children and small adults.

Biofidelity. The Small Sized Advanced Side Impact Dummy Task Group of the OSRP evaluated the SID–IIs Beta-prototype dummy against its previously established biomechanical response corridors for its critical body regions. (Scherer, *et al.*, ''SID IIs Beta+-Prototype Dummy Biomechanical Responses,'' 1998, SAE 983151.) The response corridors were scaled from the 50th percentile adult male corridors defined in an ISO Technical Report 9790 to corridors for a 5th percentile adult female, using established ISO procedures. Tests were performed for the head, neck, shoulder, thorax, abdomen and pelvic regions of the dummy. Testing included drop tests, pendulum impacts and sled tests. The biofidelity of the dummy was calculated using a weighted biomechanical test response procedure developed by the ISO. The overall biofidelity rating of the SID–IIs beta+-prototype was 7.0, which corresponds to an ISO classification of ''good.'' *Id.*

The agency also used the biofidelity ranking system developed by Rhule, *et al.*, 2002, *supra,* to assess the biofidelity of the SID–IIs with FRG hardware. (See ''Biofidelity Assessment of the SID IIsFRG dummy,'' a copy of which has been placed in the docket.) The assessment included the dummy's External Biofidelity and Internal Biofidelity. The SID–IIsFRG dummy displayed Overall External Biofidelity comparable to that of the ES–2re. The SID–IIsFRG provided improved biofidelity over the SID–H3 in all body regions except for the head/neck. The Overall Internal Biofidelity ranks of the SID–IIsFRG are all better than those of the other dummies, with the exception of the ''without abdomen and with TTI'' rank. All body region Internal Biofidelity ranks were better than, or comparable to, those of the ES–2re, ES–2 original, and SID–H3, except for the Thorax-TTI, which had a rank of 2.9. However, the SID–IIsFRG dummy is a deflection-based design and is not expected to rank well in this parameter. Even with an Internal Thorax-TTI rank of 2.9 included in the Overall rank (without abdomen), the SID–IIs Internal Biofidelity rank (1.6) is equivalent to that of the ES–2re (1.6) and better than that of the SID–H3 (1.9).

B. Injury Criteria

Injury criteria are being proposed for the head, lower spine and pelvic regions. A complete discussion of these injury criteria and supporting data can be found in NHTSA's research paper, ''Injury Criteria for Side Impact Dummies,'' and the Preliminary Economic Assessment, which have been placed in the Docket for this NPRM.

Head: The head injury criterion (HIC) shall not exceed 1000 in 36 ms, when calculated in accordance with the equation specified in S7 of FMVSS No. 201. This measure has been chosen for the reasons discussed with respect to the ES–2re, *supra.*

Thorax (Chest): The agency is not proposing a limit on chest deflection at this time. The agency would like to obtain more data on the dummy's rib deflection measurement capability under oblique loading conditions before proceeding with a proposal limiting such deflections in oblique side impact tests. Further assessment of the injury criteria applied to the SID–IIsFRG is also needed. NHTSA will continue to

[46] IIHS began using the SID–IIs in June 2003 in a side impact consumer information program rating the performance of vehicles in tests with a moving deformable barrier. Measures are recorded from the dummy's head, neck, chest, abdomen, pelvis and leg.

monitor rib deflections in tests using the SID–IIsFRG for further consideration.

NHTSA is proposing that the resultant lower spine acceleration must be no greater than 82 g. The resultant lower spine acceleration is a measure of loading severity to the thorax. In vehicle crashes, loading can be in various directions. Therefore, NHTSA believes that to account for overall loading, resultant accelerations should be considered rather than lateral acceleration alone. Though dummy-measured accelerations for the level of loading severities experienced in vehicle crashes might not have a causal relationship to injury outcome, they are good indicators of thoracic injury in cadaver testing and overall loading to the dummy thorax.

NHTSA selected the criterion based upon the series of 42 side impact sled tests using fully instrumented human cadaveric subjects, previously discussed, conducted at the MCW as well as sled tests conducted with the SID–IIs dummy under identical impact conditions as the cadaveric sled tests. The agency believes that the age of the subject involved in a side impact affects injury outcome. Subject age in the MCW sled test data was found to have significant influence on injury outcome and so was included in the injury models. The resulting thoracic injury risk curves were normalized to the average age of the injured population in a side impact crash that is represented by the SID–IIs dummy. The average age of AIS 3+ injured occupants less than 1,63 cm (5 feet 4 inches) involved in side impact crashes with no rollovers or ejections was 56 years based on NASS–CDS files for the year 1993–2001. Therefore, thoracic injury risk curves were normalized to the average occupant age of 56 years.

However, the agency's research has found that the resultant lower spine acceleration might over-predict injury risk at certain levels, or in other words, have a high ''false positive'' rate. Consequently, the agency selected a conservative resultant lower spine acceleration limit of 82 g to ensure a low false positive rate of approximately 5 percent. This corresponds to an approximate 60 percent risk of AIS 3+ injury. While this risk level is notably higher than that being proposed for the 50th percentile male dummy, the agency also balanced the SID–IIsFRG injury criteria with the practicability of vehicles being able to meet the proposed requirements. For example, if the agency were instead to consider a 50 percent AIS 3+ injury risk (as proposed for the 50th percentile male dummy) the corresponding lower spine acceleration limit would be approximately 62 g. Based on our limited testing to date (see Table 5), we believe this limit would be too low for vehicles to practicably meet. Therefore, we believe our proposal of 82 g strikes a good balance. The agency recognizes that there are construction differences in the spine box between the ES–2re and the SID–IIs. NHTSA plans to continue testing these dummies in vehicles and monitor the differences in lower spine responses, if any.

Pelvis and Abdomen: As presented in the report ''Injury Criteria for Side Impact Dummies,'' the pelvic injury criterion was developed from an analysis of the same cadaver impact data that was used for the development of the ES–2re pelvic injury criterion. The measured loads in these impact tests were distributed over a broad area of the pelvis that included the iliac crest and the greater trochanter.[47] The measured applied pelvic force to the cadaveric subjects was mass-scaled to represent the applied forces on a 5th percentile female. Under similar impact conditions, the scaled applied pelvic forces on the cadaveric subjects was assumed to be equal to the sum of the iliac and acetabular forces measured on the SID–IIsFRG dummy.[48] Therefore, the pelvic injury risk curves developed for the SID–IIsFRG dummy are based on the maximum of the sum of the measured acetabular and iliac force. The proposed 5,100 N force level for the SIDIIsFRG corresponds to approximately 25 percent risk of AIS 3+ pelvic fracture.[49]

As with the SID–IIsFRG rib deflection instrumentation, the agency would like to obtain more data on the dummy's abdominal measurement capability under oblique loading conditions before proceeding with a proposal limiting such deflections in oblique side impact tests. Data on abdominal deflection and other measures will continue to be monitored by NHTSA in all future tests using the SID–IIsFRG dummy.

C. Oblique Pole Tests With 5th Percentile Female Dummy

NHTSA has conducted three oblique pole tests with the SID–IIsFRG dummy seated in the full forward position. The test results are presented in the following Table 5:

TABLE 5.—75-DEGREE POLE TEST RESULTS

[SID–IIsFRG dummy]

Test vehicle	Restraint*	HIC_{36}	Lower spine (g)	Pelvis (N)
Proposed Limits		1,000	82	5,100
2003 Toyota Camry (tested April 2003)	AC+Th (remotely fired at 11 ms)	512	70	4,580
2003 Toyota Camry (tested March 2003)	AC+Th (bags did not deploy)	8,706	78	5,725
2000 Saab 9–5	Comb.	2,233	67	6,045
2002 Ford Explorer	AC (remotely fired at 13 ms)	4,595	101	7,141

* Comb.=head/chest SIAB; AC=air curtain; Th=chest SIAB

These data indicate that the most serious problem in terms of protecting small occupants in oblique crashes is lack of head protection. NHTSA believes that this can be resolved by providing an inflatable head protection system that has been re-designed to address small occupants. The practicability of this approach is illustrated by the results for the 2003 Camry (air curtain and thorax side air bag system) tested in April 2003 (HIC 512). In contrast, in a March 2003 test of the Camry in which the air curtain and thorax bags did not deploy, the SID–IIsFRG had a HIC of 8,706.

The agency's Preliminary Economic Assessment for this NPRM estimates

[47] The bony protrusion at the top of the femoral shaft opposite the ball of the hip joint.

[48] IIHS used the same assumption when developing performance standards for its consumer ratings program. See Arbalaez, R. A., *et al.*, ''Comparison of the EuroSID–2 and SID–IIs in Vehicle Side Impact Tests with the IIHS Barrier,'' 46th Stapp Car Crash Journal (2002).

[49] In the IIHS side impact consumer ratings program, 5,100 N is the injury parameter cutoff value for the ''Good-Acceptable'' range for the combined acetabulum and ilium force values. *http://www.highwaysafety.org/vehicle_ratings/measures_side.pdf.*

that the use of the SID–IIsFRG in the oblique pole test would save an additional 164 lives beyond the fatalities saved by changes to vehicle designs to meet an oblique pole test using the 50th percentile male dummy alone.

c. FMVSS No. 201 Pole Test Conditions

The agency is considering the possibility of using a 29 km/h (18 mph) 90 degree impact test, such as that incorporated into FMVSS No. 201's pole test (or a 90 degree test conducted at a 32 km/h (20-mph) test speed). The 90 degree impact angle has proven itself repeatable and an acceptable way to ensure some level of performance of head protection systems in perpendicular, vehicle-to-narrow-object impacts. An advantage to having the impact angle and test speed be the same as that used in FMVSS No. 201 would be that inflatable head protection systems that are already in place in many vehicles would meet these criteria when tested in a 90-degree impact. Using the same test as is currently optional would possibly allow the installation of inflatable head protection systems in all vehicles faster and at lower cost. A disadvantage is that fewer lives would be saved. (NHTSA estimates that 446 lives would be saved by the FMVSS No. 201 test using the 50th percentile male dummy, while 792 lives would be saved by the oblique pole test using the 50th percentile male dummy. An estimated 859 lives would be saved by the oblique pole test using both the 5th percentile female dummy and the 50th percentile male dummy.)

NHTSA has conducted several 29 km/h (18 mph) 90-degree pole tests of vehicles equipped with either the combination head/chest SIAB or side window air curtain (AC) systems, using the ES–2 dummy. See Table 6.

TABLE 6.—FMVSS NO. 201 POLE TEST 90-DEGREE TEST RESULTS

[ES–2 Dummy]

Test vehicle	Restraint *	HIC_{36}	Rib-def. (mm)	Lower spine (gs)	Abd.-force (N)	Public-force (N)
Proposed Limits		1,000	35–44	82	2,400–2,800	6,000
1999 Maxima	Comb.	130	33.0	45.7	1,450	2,080
1999 Cougar	Comb.	313	41.5	56.6	859	2.214
1999 Volvo S80	AC+Th	244	41.5	36.7	1,217	1,166
1999 Ford Windstar	Comb.	164	31.4	53.5	2,352	1,382
2000 Saab 9–5	Comb.	114	37.8	40.2	849	1,733
2001 Saturn L200**	AC	435	46.0	68	1,084	1,917
2002 Ford Explorer	AC	208	45.9	65.5	2,074	1,262

* ITS=inflatable tubular structure; Comb=combination head/thorax air bag; AC=air curtain; Th=chest SIAB.
** Lateral back plate lateral load 2,047 N.

Based on the test results using the ES–2 dummy, inflatable head protection systems appear to be working relatively well in protecting the occupant's head in a perpendicular test. All HIC measurements were well below the 1,000 limit. The lower spine g's and other force measurements were below the proposed limits. However, rib deflections exceeded the proposed 44 mm (1.73 in) upper limit in a test of a sport utility vehicle (SUV) (Ford Explorer) and a passenger car (Saturn L200) (both of which had no additional thorax protection, but just an air curtain for the head), and was close to the limit in tests of two other passenger cars. This suggests that if a 90-degree vehicle-to-pole test with an ES–2 dummy were added to FMVSS No. 214, it is likely that the installation of additional chest protection countermeasures would be needed in many production vehicles to comply with a rib deflection criterion in the range of 35–44 mm.[50]

All test results listed in Table 6 were from the ES–2 without the ''rib extension'' fix, in which back plate lateral loads were considered low (under 1000 N)(224.8 lb). As discussed earlier in this preamble, the agency has developed a fix (which consists of ''rib extensions,'' a set of two needle bearings for each rib plus a Teflon coated back plate) to minimize or eliminate the grabbing force. The extended ribs provide a continuous loading surface that nearly encircles the thorax and enclose the posterior gap of the ES–2 ribcage. As such, for tests using the ES–2 without the fix in which there were large back plate loads, the rib extensions can result in increased rib deflections in the modified dummy since an intruding structure can no longer grab the dummy back plate without loading the rest of the thorax. As discussed in the agency's technical report for the ES–2re dummy, the results of two 2002 Impala side NCAP tests show that the agency's fix has reduced the grabbing force from 4.7 kN (989 pounds) to practically zero. The tests also show that the rib deflection increased from 16–24 mm (0.63–0.94 inches) to 43–51 mm (1.69–2.01 inches).

NHTSA believes that tests using the ES–2 without the fix in which there were small back plate loads reflect the likely performance of vehicles in tests with the ES–2re. Two sets of side NCAP tests were conducted using a 2003 Toyota Corolla and a 2001 Ford Focus. The results showed that the rib extension fix did not adversely affect the results when the back plate grabbing force was reported to be low in the original ES–2 design.

With regard to abdominal force in the FMVSS No. 201 pole tests, the abdominal force measurements were far below the 2,800 N (629 pound) proposed upper limit. However, the ES–2 dummy in the Ford Windstar and the Ford Explorer produced a significantly higher abdominal force than in the five passenger cars. These two vehicles, being relatively higher and heavier than passenger cars, can comply with those requirements relatively easily when tested with the MDB. However, as mentioned previously, a higher and heavier vehicle would not have much advantage, if any, over an average passenger car in the proposed pole test.

Since 1999, the agency has conducted eleven 29 km/h (18 mph) 90-degree pole tests using the SID–H3. Ten of these were in the agency's compliance test program of FMVSS No. 201, and one was conducted for research purposes. The results are tabulated below in Table 7:

[50] The test data also show that the vehicles exceeded or came close to exceeding the 42 mm (1.65 inch) limit specified by the European Union, EU 96/27/EC.

TABLE 7.—FMVSS NO. 201 POLE TEST 90-DEGREE TEST RESULTS

[SID–H3 Dummy]

Test vehicle	Restraint*	HIC_{36}	TTI(d)	Pelvis-g
Proposed Limits		1,000	85/90(4-door/2-door)	130
1999 Volvo S80	AC+Th	237	36.0	44.0
1999 BMW 328i	ITS+Th	340	47.0	49.0
2001 Saturn L200	AC	579	63.0	47.7
2001 Lexus GS–300	AC+Th	336	51.3	55.7
2001 VW Jetta	AC+Th	444	38.0	40.5
2001 Mercedes C240	AC+Th	457	78.9	60.2
2002 Ford Explorer	AC	183	83.0	48.0
2002 Mercedes C230	AC+Th	306	47.0	49.8
2002 Jaguar X-type	AC+Th	271	46.6	44.3
2002 Saturn Vue	AC	533	53.1	51.5
2003 Cadillac CTS	AC+Th	281	45.8	46.6

* ITS=inflatable tubular structure; AC=air curtain; Th=chest SIAB.

These test results indicate that inflatable head protection systems perform adequately in protecting an occupant's head in a 90-degree impact. The HIC measurements are well below the 1,000 limit. In contrast, the 1999 BMW 328i and the 2001 Saturn L200, when tested without the HPSs (not shown), received HIC scores of 2,495 and 11,071, respectively. The pelvis accelerations in the above tests are also well below the 130 g's allowable limit. Based on the above pole test data, NHTSA believes that the current production vehicles, when equipped with an inflatable head protection system, would comply with the proposed 90-degree pole test requirements if the tests were performed with a SID–H3 dummy (even assuming the FMVSS No. 201 seating position were used).

In general, the TTI(d) measurements are also low. Judging from the above limited test results, NHTSA believes that the safety countermeasures that have been installed in passenger cars to comply with existing FMVSS No. 214 requirements (*i.e.*, the MDB side impact requirements (for the chest and the pelvis)) also provide significant protection in 90 degree, 29 km/h (18 mph) impacts against a rigid narrow object.

However, these tests indicate also that in vehicles with a greater riding height relative to the MDB, the dummy's chest is loaded more severely in a pole test than in the standard's MDB test. Thus, many LTVs would likely have a harder time in a pole test than in an MDB test in meeting the thoracic protection criteria of FMVSS No. 214. For example, the Ford Explorer did not comply with the TTI(d)–85g limit in the oblique pole test (Table 4). The Explorer barely met the TTI(d)–85g limit in a 90-degree test (Table 7). The Ford Explorer had a TTI(d) of 83 g's, approaching the TTI(d)–85g limit. As noted above, it is easier for an SUV to comply with the MDB test requirements because of the greater ride height and greater mass of the SUV relative to the MDB. (To illustrate, NHTSA tested the 2002 Ford Explorer in the side NCAP configuration with the MDB and the results showed that both the driver and the rear seat passenger received a low TTI(d) score of 35 g's.)

VII. Proposed Improvements of Moving Deformable Barrier Test

a. Replacement of Existing 50th Percentile Male Dummy With ES–2re and Addition of Injury Criteria

This NPRM proposes to require use of an improved 50th percentile male dummy (the ES–2re) in the MDB test in place of the SID and would take advantage of the enhanced injury assessment capabilities of the dummy by specifying injury criteria consistent with those developed for the dummy. These criteria are the same ones proposed above for the vehicle-to-pole test. Comments are requested on using the SID–H3 dummy in the test.

This NPRM would also maintain the current FMVSS No. 214 applicability of the MDB test to LTVs with a GVWR of 2,722 kg (6,000 lb) or less. [51] At this time, we do not believe that applying the MDB test to LTVs with a GVWR over 2,722 kg (6,000 lb) would provide safety benefits to occupants of these heavier vehicles, yet it would add test burdens. However, while LTVs with a GVWR over 6,000 lb would continue to be excluded from the MDB requirements, today's proposed pole test would apply to LTVs with a GVWR of up to 4,536 kg (10,000 lb). The pole test is a more stringent test of the thorax of occupants of heavier struck LTVs than the MDB test and would result in reduced chest injuries.

With regard to thoracic injury criteria, some vehicles that now meet the MDB test in FMVSS No. 214 when tested with the SID might exceed the proposed rib deflection limit when tested with the ES–2re dummy and so might need to be redesigned. NHTSA's 1999 Report to Congress (Status of NHTSA Plan for Side Impact Regulation Harmonization and Upgrade, March 1999) showed that 3 of 8 FMVSS No. 214 compliant vehicles exceeded the European 42 mm (1.65 inch) rib deflection limit in tests performed according to the EU 96/27/EC side impact test procedures. (The EU 96/27/EC specifies the use of the EuroSID–1 dummy, a different barrier, a different angle of impact and different injury criteria.) Since the proposed ES–2 dummy is more sensitive than the EuroSID–1 dummy to thoracic impact forces, more vehicles would have likely exceeded the rib deflection limit in the aforesaid European side impact tests if the ES–2 dummy had been used. Additionally, the lateral velocity component of the FMVSS No. 214 MDB is roughly equivalent to the 50 km/h (30 mph) impact velocity specified in the EU 96/27/EC, but the U.S. MDB is much heavier and stiffer than the European barrier. Judging from these facts, NHTSA believes that some U.S. vehicles might not comply with the proposed upper limits of 44 mm (1.73 inch) upper limit for rib deflection and/or the 2,800 N (629 pound) upper limit for abdominal force criterion without redesign, if the ES–2re dummy were used in FMVSS No. 214 MDB side impact tests. Based on test results of certain vehicles, the agency has tentatively concluded that it is feasible to meet the proposed requirements.

The agency has conducted FMVSS No. 214 crash tests using the ES–2re and

[51] LTVs with a GVWR over 6,000 lb were excluded from the MDB requirements because they could meet the MDB requirements prior to the extension of the requirements to LTVs.

MDBs of various configurations and weights moving at various impact speeds. These tests are discussed in detail in the ES–2 Technical Report that has been placed in the docket. Two FMVSS No. 214 MDB tests were conducted using the test procedures specified in the standard and the ES–2re in the driver and rear passenger seating positions. Test results are tabulated below in Tables 8 and 9 for tests of the dummy in the driver and rear passenger positions, respectively.

TABLE 8.—FMVSS NO. 214 MDB TEST RESULTS

[ES–2re driver]

Test vehicle	Restraint HPS and/or SIAB	HIC_{36}	Rib-def. (mm)	Lower spine (g)	Abd.-force (N)	Pubic-symph. (N)
Proposed Limits		1,000	35–44	82	2,400–2,800	6,000
2001 Ford Focus	None	137	36	60	1,648	2,833
2002 Chevrolet Impala	None	69	46	49	1,225	1,789

TABLE 9.—FMVSS NO. 214 MDB TEST RESULTS

[ES–2re rear passenger]

Test vehicle	Restraint HPS and/or SIAB	HIC_{36}	Rib-def. (mm)	Lower spine (g)	Abd.-force (N)	Pubic-symph. (N)
Proposed Limits		1,000	35–44	82	2,400–2,800	6,000
2001 Ford Focus	None	174	20	59	1,121	2,759
2002 Chevrolet Impala	None	187	12	58	4,409	2,784

Tables 8 and 9 show that the 2001 Ford Focus would meet the proposed FMVSS No. 214 MDB test requirements when it is tested with the ES–2re dummy (using the injury criteria associated with that dummy). The Ford Focus is a small car. The task is generally easier for large vehicles with a high ride height. The test results of the Ford Focus indicate that an upgraded MDB test using the ES–2re dummy with its associated injury criteria would be practicable.

The test results also show that the 2002 Chevrolet Impala would not comply with all of the proposed FMVSS No. 214 MDB test requirements. It did not meet the 44 mm (1.73 in) rib deflection criterion for the driver dummy (45.6 mm). Also, the abdominal force of the rear seat dummy exceeds the 2,500 N (562 pounds) limit by a large margin. An examination of the passenger compartment interior reveals that the rear armrest design and its location might be the problem. The armrest is made of foam material and its main portion is approximately 75 mm (3 inch) in width, 75 mm (3 inch) in height, and 250 mm (12 inch) in length. The lower edge of the armrest is approximately 100 mm (4 inches) above the seat surface. During a MDB side impact test, the protruded armrest would contact the abdominal area of a 50th percentile male dummy that is placed in the rear outboard seating position on the struck side. A severe abdominal impact is likely to create an excessively large force resulting in injuries. Since the SID dummy does not measure the abdominal force, this potential injury risk would not be detected in the existing FMVSS No. 214 MDB test. The use of ES–2re dummy in the MDB test would identify this.

It seems evident that the armrest of the Chevrolet Impala can be modified to mitigate this situation. A common modification is to extend the lower edge of the armrest to completely cover the lower torso of the test dummy. This design has already been used in many vehicles, including the 2001 Ford Focus. It is noted that this particular modification might reduce the rear seat width by a small amount.

b. Addition of 5th Percentile Female Dummy (SID–IIsFRG) and Injury Criteria

This NPRM also proposes to upgrade the MDB requirements of FMVSS No. 214 by requiring vehicles to comply when tested with the 5th percentile female dummy (SID–IIsFRG). As noted above in this preamble, NASS data show that nearly 35 percent of MAIS 3 and greater side impact injuries occurred to occupants represented by the SID–IIsFRG dummy (5 foot 4 inches and under). The small stature occupant suffered relatively more head and abdominal injuries and relatively fewer chest injuries. These data indicate a safety need for an injury assessment tool representing small stature occupants to supplement the 50th percentile male dummy specified in the MDB test.[52] The agency proposes that the criteria proposed for the SID–IIsFRG in the vehicle-to-pole test must also be met in the MDB test with the SID–IIsFRG.

Another proposed change to the MDB test in FMVSS No. 214 concerns the provision in S3(b) that excludes passenger car rear seats that are too small to accommodate the SID. The provision would be amended to specify that the seats would be excluded only if they cannot accommodate the SID–IIsFRG. If the seat cannot accommodate the mid-size male dummy but is able to fit the SID–IIsFRG, the seat would not be excluded from the MDB test. Further, the determination as to whether an ES–2re (or a SID–IIsFRG) can be accommodated in the rear seat would be made when using either the ES–2re or the SID–IIsFRG in the driver's seating position. When the SID–IIsFRG is used in the driver's seating position, the driver's seat would be positioned full forward. Adjustable rear seats would be placed in their most rearward, full down position when seating the male or female dummy.

The technical report for the SID–IIsFRG dummy that accompanies this NPRM discusses the crash tests that the agency has conducted using this dummy. Several aspects of those tests are discussed below.

NHTSA tested the Ford Focus and Chevolet Impala to FMVSS No. 214's MDB test procedure using the SID–IIsFRG in the driver and rear passenger

[52] As noted in an earlier footnote, IIHS is using the SID–IIs in its MDB test. Two SID-IIs test dummies are positioned on the struck side of the test vehicle, one in the driver seat and one in the seat behind the driver. The tests are conducted with a 1,500 kilogram (3,300 pound) MDB with a 90 degree impact.

seating positions. Test results are tabulated below in Tables 10 and 11.

TABLE 10.—FMVSS NO. 214 MDB TEST RESULTS

[SID–IIsFRG driver]

Test vehicle	Restraint HPS and/or SIAB	HIC_{36}	Lower spine (sg)	Pelvis (N)
Proposed Limits		1,000	82	5,100
2001 Ford Focus	None	181	72	5,621
2002 Chevrolet Impala	None	76	52	2,753
2001 Buick Le Sabre	Thorax	130	67	4,672

TABLE 11.—FMVSS NO. 214 MDB TEST RESULTS

[SID–IIsFRG rear passenger]

Test vehicle	Restraint HPS and/or SIAB	HIC_{36}	Lower Spine (sg)	Pelvis (N)
Proposed Limits		1,000	82	5,100
2001 Ford Focus	None	526	65	3,997
2002 Chev Impala	None	153	89	5,711
2001 Buick Le Sabre	None	221	77	[1]4,041

[1] Preliminary.

Tables 10 and 11 show that the 2001 Ford Focus would almost fully comply with the proposed FMVSS No. 214 MDB test requirements when tested with the SID–IIsFRG dummy and its associated injury criteria. Only the pelvis force for the driver dummy was exceeded in this test, which, judging from the film coverage, could be attributed to the intruding armrest.[53] Alternatively, the 2002 Chevrolet Impala was able to meet all of the driver injury criteria with at least a 37 percent margin. The 2001 Buick Le Sabre also met all the proposed criteria for the driver dummy.

The 2002 Chevrolet Impala was the only vehicle that would not comply with the proposed rear seat FMVSS No. 214 MDB test requirements, since both the lower spine acceleration and the pelvis force of the rear seat dummy exceeded the proposed injury limits. As discussed previously, the rear armrest design might be the problem, and a simple remedy appears to be technically feasible.

VIII. Other Issues

a. Struck Door Must Not Separate From Vehicle

FMVSS No. 214 currently prohibits any side door that is struck by the moving deformable barrier from separating totally from the vehicle (currently in S5.3.1 of the standard). The standard also requires any door (including a rear hatchback or tailgate) that is not struck by the moving deformable barrier to meet the following requirements: (a) The door shall not disengage from the latched position; (b) the latch shall not separate from the striker, and the hinge components shall not separate from each other or from their attachment to the vehicle; and (c) neither the latch nor the hinge systems of the door shall pull out of their anchorages. This NPRM proposes to have the same door opening prohibitions apply to vehicles tested in the vehicle-to-pole tests.

b. Rear Seat

According to 1999 and 2000 Fatality Analysis Reporting System (FARS) data, the front outboard seating positions account for 89.2 percent of total fatalities and 88.8 percent of total injured occupants in passenger cars, and 86.6 percent and 87.6 percent of total fatalities and total injured occupants in LTVs. While these are for all crash conditions, the percentages for side impacts to narrow objects are similar. In nearside crashes, rear occupants make up 7.3 percent, 10.2 percent and 4.4 percent of seriously injured persons in crashes with passenger cars, LTVs and narrow objects, respectively. According to 1997–2001 NASS CDS annualized fatality distribution for rear outboard occupants, there were 22 fatalities caused by a vehicle-to-pole side crash, 7 of which were due to head injury.

The test procedure for the vehicle-to-pole test would call for a test dummy in the front outboard seating position nearest to the side impacting the pole, as in FMVSS No. 201. FMVSS No. 201 does not use a test dummy in the rear seat. Comments are requested on applying the pole test to the rear seat.

We have tentatively decided not to apply the test to the rear seat. This NPRM focuses on the front seat because years of conducting the optional pole test in FMVSS No. 201 have yielded substantial information about meeting pole test requirements in that seat. Less information is known about the rear seat. We have also sought to contain the costs of this rulemaking. Applying the test to rear seats would require at least twice as many tests per vehicle.

Furthermore, NHTSA believes that the countermeasure likely to be widely used to meet the requirements of the proposed vehicle-to-pole test will be air curtains, some of which currently cover both front and rear side window openings and thus provide protection to rear seat occupants. NHTSA tentatively concludes that those air curtains will be large enough to cover both front and rear side window openings. Comments are requested on manufacturers' plans to tether air curtains to the A- and C-pillars of vehicles.

c. Interaction With Other Side Impact Programs

1. Out-of-Position Criteria

Background. The agency has been concerned about the potential risks of side impact air bags (SIAB) to out-of-position (OOP) occupants, particularly children, from the first appearance of side air bag systems in vehicles. NHTSA initiated research in the fall of 1998 into the interactions between OOP children and side air bags. In April 1999, NHTSA

[53] A copy of the film is available from the FHWA/NHTSA National Crash Analysis Center Film Library, 20101 Academic Way, Suite 203, Ashburn, VA 20147–2604. Telephone: 703–726–8236; Fax: 703–726–8358.

held a public meeting to discuss the potential benefits and risks of side impact air bags and the development of possible test procedures to assess those risks.[54]

Safety Need. The agency has investigated more than 92 side impact air bag deployment crashes through NHTSA's Special Crash Investigations unit in order to determine whether a problem exists related to OOP occupants. There have been no fatalities and only one confirmed AIS 3+ injury due to a side air bag, this to a 76-year-old male driver. Side air bags[55] do not appear to pose a safety risk to OOP children, even taking into account exposure risks.

Technical Working Group Recommended Procedures. In July 1999, the Alliance, AIAM, the Automotive Occupant Restraints Council, and IIHS formed a technical working group (TWG) to develop recommended test procedures and performance requirements to evaluate the risk of side air bags to children who are out-of-position. In August 2000, the TWG issued a draft report, ''Recommended Procedures For Evaluating Occupant Injury Risk From Deploying Side Air bags,'' The Side Air Bag Out-Of-Position Injury Technical Working Group, Adrian K. Lund (IIHS) Chairman, August 8, 2000. This report was revised in July 2003. The proposed procedures were based on the work of Working Group 3 of the International Organization of Standard (ISO) Technical Committee 10, which had developed draft procedures for evaluating side impact air bags. ''Road Vehicles-Test Procedures for Evaluating Occupant Interactions with Deploying Side Impact Airbags.'' The ISO procedures were finalized in October 2001 (ISO –TR 14933, October 2001).

Under the TWG procedures, a 5th percentile female side impact dummy (SID–IIs), a 3-year-old and a 6-year-old Hybrid III frontal child dummy are placed in several positions close to the air bag systems. The TWG procedures address side air bags that deploy from the seat backs (seat-mounted), those that deploy from the door or rear quarter panel, typically just below the window sill (side-mounted), those that deploy from the roof rail above the door (roof-mounted), and roof-rail and seat back/door systems. After the dummy is positioned as specified in the procedures, the air bag is deployed statically, and the dummy injury measures due to the deployment of the air bag are determined. The measured forces are compared to TWG's ''Injury Reference Values'' and ''Injury Research Values.''[56] The TWG's limits on the Injury Reference Values are mostly the same as those in FMVSS No. 208 for OOP testing of frontal air bags.

NHTSA initiated a research program to evaluate the TWG procedures and propose, if necessary, any alternatives and modifications to assess the injury risk to OOP children. The agency's test program included 11 vehicles equipped with front seat side air bags and one vehicle equipped with rear seat side air bags. The TWG OOP test procedures were used as the baseline for selecting test positions. However, tests were performed with the basic TWG procedures with and without NHTSA variations. Many different types of production systems, including door-mounted thorax bags, seat-mounted head-thorax combination bags, and roof mounted head protection systems, were tested using 3-year-old and 6-year-old Hybrid-III child dummies. The results were reported in a technical paper, ''Evaluation of Injury Risk from Side Impact Air Bags.'' (Proceedings of the 17th ESV Conference, June 2001, Paper # 331.) The main purpose of the test program was to assess the potential safety risks that any system could pose to OOP small adults and children due to deploying side air bags.

The main observations from the agency's research is summarized in the following:

- The TWG procedures address dummy sizes, seating positions, and expand the traditional injury assessment measures.
- The TWG procedures are quite comprehensive and are very successful at discriminating aggressive SIABs.
- The TWG procedures are adequate baseline procedures for SIAB OOP testing to minimize unreasonable risks to children and small adults.
- For the 3- and 6-year old occupants, the TWG test procedures do not always find the worst case conditions for some current SIAB systems.

Future Action. Door- and seat-mounted side impact head and/or chest protection systems in future vehicles might need to be more aggressive compared to current systems. Comments are requested on how meeting the requirements proposed by this NPRM would affect manufacturers' ability to meet the TWG procedures. The agency is conducting additional tests of the newer side air bag systems that are able to comply with the pole test requirements to assess their risks, if any. The agency will continue to monitor compliance with the TWG test procedures and requirements by automotive manufacturers. In addition, the agency will conduct further testing of new air bag designs. The knowledge gained from the test program will allow us to take any appropriate action in this area if there are indications it is warranted.

2. FMVSS No. 201 Pole Test

Currently, FMVSS No. 201 specifies an optional 90-degree, 29 km/h (18 mph) pole test using a SID–H3 driver dummy (1000 HIC test criterion). As noted above, this test was part of a set of amendments adopted to accommodate the installation of head protection systems (HPS) in the pillar and side rail areas. If a vehicle complies with the pole test requirements, the 24.0 km/h (15 mph) head form test is reduced to 19.3 km/h (12 mph) for targets near the stowed HPS.

This NPRM proposes to amend FMVSS No. 201 such that, if the proposed oblique 32 km/h (20 mph) pole test were added to FMVSS No. 214, vehicles certified to that test would be excluded from the 90-degree, 29 km/h (18 mph) pole test in FMVSS No. 201. The agency tentatively concludes that a vehicle that meets the oblique 32 km/h (20 mph) pole test would also meet FMVSS No. 201's 90-degree 29 km/h (18 mph) test. Seat-mounted SIABs that deploy into an area far enough forward to cushion an occupant's head in an oblique impact are also likely to protect the head in a perpendicular one. Similarly, an air curtain tethered to the A- and C-pillars would also provide coverage in both an oblique and perpendicular crash. Since the FMVSS No. 214 pole test would encompass and go beyond the pole crash replicated by the FMVSS No. 201 pole test, there does not seem to be a need for the latter test. Thus, the agency proposes to eliminate the FMVSS No. 201 optional pole test for vehicles certified to the FMVSS No. 214 oblique pole test, to delete an unnecessary test burden on manufacturers. Note, however, that targets near the stowed HPS would still be subject to the head form test of FMVSS No. 201, conducted at the 19.3 km/h (12 mph) test speed specified in that standard.

[54] The agency has placed materials in Docket NHTSA–1999–5098 relating to the risks to out-of-position occupants from SIAB.

[55] For the purposes of this discussion, ''side air bags'' means side thorax air bags and combination thorax/head air bags, and not side head air bags. Our testing found no reason for concern with side head air bags (window curtains or inflatable tubular structures) and out-of-position children or adults.

[56] Injury Reference Values are those that the majority of the TWG believed have a strong scientific basis. Injury Research Values are those that TWG believes currently have less scientific support or insufficient test experience to allow full confidence in their accuracy.

d. Harmonization

Today's proposal is consistent with NHTSA's international harmonization policy goal of harmonizing with non-U.S. safety requirements except to the extent needed to address safety problems here in the U.S.

Dynamic Test For Head Protection. Worldwide, there are numerous countries that have side impact protection requirements or governmental or non-governmental side impact consumer information programs. Similar to NHTSA's NCAP program, the European NCAP (Euro NCAP) program seeks to provide consumers with reliable and accurate comparative information for use in making purchasing decisions. Euro NCAP incorporates a side impact program, which involves a 50 kph (30 mph) barrier impact into the driver's side of a car, and an optional 29 km/h (18 mph) 90 degree pole test. (EuroNCAP Side impact testing Protocol, Version 4, January 2003.) While these side impact programs are similar to those of the U.S., the safety need addressed by those programs is different from the side impact safety need in the U.S. There are more LTVs in the U.S. fleet than elsewhere. Vehicle compatibility is a relatively unique U.S. problem.

The European Community's side impact safety regulation, EU Directive 96/27/EC, is similar to existing FMVSS No. 214 in specifying a side impact of a moving deformable barrier into the stationary target vehicle. Similar to the MDB test of FMVSS No. 214, a 50th percentile male dummy is placed in the front seat of the target vehicle. (FMVSS No. 214 also specifies placement of another 50th percentile dummy in the vehicle's rear seat.[57])

The agency has tentatively concluded that adopting our proposed vehicle-to-pole test into FMVSS No. 214 would result in significantly greater benefits than those that would accrue from adopting EU 96/27/EC or the Euro NCAP side impact test into the standard.[58] The side impact tests of EU 96/27/EC and Euro NCAP moving barrier test address mainly the chest injury problem. The barrier used in those tests is not representative of the vehicles in the U.S. fleet, which has more SUVs and other LTVs as compared to the European fleet. Further, these tests do not simulate an impact with an exterior narrow rigid structure—which constitutes a serious safety problem today—nor do they address head protection in the manner addressed by our proposed pole test.

Although the Euro NCAP optional pole test is closer to today 's NPRM in addressing head protection, the Euro NCAP test is basically the same as the optional FMVSS No. 201 test. NHTSA believes that the oblique pole test proposed today would provide significantly more benefits than those from either of these 90-degree 29 km/h (18 mph) tests.

Work is continuing internationally on a side impact pole test. The International Harmonized Research Activities (IHRA)[59] Side Impact Working Group (SIWG) is actively researching the side impact problem and has proposed that several test procedures for protecting the struck side occupant in side impact crashes be subjected to validation testing. The IHRA SIWG has agreed to adopt NHTSA's oblique impact pole test, pending the results of those validation tests. It has also agreed that head form impact tests similar to that of FMVSS No. 201 is necessary for protecting the occupants on the struck side as the tests pertain to the targets that are likely to be contacted by an occupant's head in a side impact crash.[60]

Test Dummies and Injury Criteria. Incorporation of the ES–2 dummy into FMVSS No. 214 in both the vehicle-to-pole and MDB tests would be a step toward harmonizing the standard with non-U.S. regulations. The ES–2 dummy is used in the non-governmental Euro NCAP side impact program. While the ES–2 dummy has not yet replaced the EuroSID–1 dummy in the side impact directive of the European Union (EU 96/27/EC), there is work underway in WP.29 to replace EuroSID–1 in ECE Regulation 95 with the ES–2, and in the European Union to subsequently amend the EU Directive accordingly. As noted earlier in this preamble, the GRSP Working Party to WP.29 transmitted a recommended amendment to ECE Regulation 95 to WP.29 for consideration by AC.1 at its November 2003 meeting. The GRSP specifically urged consideration of NHTSA's actions to fix the back plate of the ES–2 by way of the rib extensions.

The injury criteria proposed in this notice for the ES–2re dummy are consistent with the injury criteria now in EU 96/27/EC. The proposed 42 mm (1.65 in) requirement for maximum chest deflection for the ES–2re, the 2,500 N (562 lb) abdominal load injury criterion and the 6,000 N (1,349 lb) pubic symphysis load injury criterion are the same as those applied in the European side impact regulation EU 96/27/EC.

At this time, the SID–IIs is not used by other countries for regulatory purposes, but Canada uses the dummy for side impact research. Canada does not use the FRG version of the dummy.

IX. Estimated Benefits and Costs of Proposed Pole Test

We are placing in the docket a Preliminary Economic Assessment (PEA) to accompany this NPRM.[61] The PEA analyzes the potential impacts of the proposed vehicle-to-pole side impact test and the modifications to the MDB test. A summary of the PEA follows. Comments are requested on the analyses.

Benefits. The agency first identified the baseline target population and then estimated the fatality or injury reduction rate. The target population was defined as occupants who sustained fatal and/or AIS 3+ injuries to the head, chest, abdomen or pelvis in side crashes. The target population was initially estimated to be 2,910 fatalities and 7,248 AIS 3–5 injuries in crashes with a delta-V of 19 to 40 km/h (12–25 mph). When adjusted

[57] The test differs from FMVSS No. 214 in other ways. The MDB has a mass of 950 kg (2,095 lb) compared to 1,367 kg (3,015 lb) for the U.S. barrier. The European barrier's face is smaller and much softer than the U.S. barrier on the blocks closest to the sides. The bottom edge is the most forward part of the European MDB and is 300 mm (11.8 in) from the ground. The U.S. barrier face's bottom edge is 280 mm (11.0 in) from the ground and has a 330 mm (13 in) bumper height. In EU 96/27/EC, the barrier impacts the target vehicle at 50 km/h (30 mph) and 90 degrees with no crab angle. (In FMVSS No. 214, the stuck vehicle's wheels are crabbed to simulate movement of the target vehicle.) The injury criteria associated with the EuroSID–1 differ from that of SID. EU 96/27/EC limits HIC, rib deflection (42 mm), Viscous Criterion (1.0), abdominal force (2.5 kN) and the pubic symphysis force (6 kN).

[58] The side impact protection requirements promulgated by Japan (Article 18, Attachment 23, ''Technical Standard for the Protection of the Occupants in the Event of a Lateral Collision'') and Australia (Australian Design Rule 72/00, ''Dynamic Side Impact Occupant Protection'') are those in ECE Regulation 95 EU/96/27/EC. A U.S. final rule adopting the vehicle-to-pole test proposed today would provide greater benefits than those requirements.

[59] IHRA is an inter-governmental initiative that aims to facilitate greater harmony of vehicle safety policies through multi-national collaboration in research.

[60] In addition, they are validating two different moving deformable barrier tests to accommodate the issues of fleet differences between countries. One is the IIHS test, the other is a test performed at the same mass and speed, but uses an advanced barrier face that better reflects the shape and stiffness of a passenger vehicle. The IHRA SIWG also has work underway to validate the test procedures developed by the Side Impact Airbag Out-of-Position Technical Working Group (TWG) for static side impact airbag tests.

[61] The PEA may be obtained by contacting Docket Management at the address or telephone number provided at the beginning of this document. You may also read the document via the Internet, by following the instructions in the section below entitled, ''Viewing Docket Submissions.'' The PEA will be listed in the docket summary.

using the 2003 seat belt use rate, the target population estimate was 2,874 fatalities and 7,243 MAIS 3–5 injuries. Target fatalities and MAIS 3–5 injuries were derived from 1997–2001 CDS. In identifying the target population, occupants with heights of 165 cm (65 inches) or taller were assumed to be represented by the 50th percentile male dummy (the SID–H3 or the ES–2re), and the remaining occupants were assumed to be represented by the 5th percentile female dummy (the SID–IIsFRG).

The agency estimated the lives and serious injuries prevented by wider thorax and head window curtain air bags in pole/tree impacts, vehicle-to-vehicle/other road side object crashes (including partial ejections), and non-rollover complete ejections. The analysis assumed that benefits would only accrue in crashes with delta-V in the 19 to 40 km/h (12 to 25 mph) range. Taking into account the presence of head and thorax side air bags already in the MY 2003 new vehicle fleet, the incremental benefits would be 686 fatalities saved and 880 AIS 3–5 injuries prevented if a combination air bag, 2-sensor (per vehicle) system were used. (The combination air bag, 2-sensor system would be the least expensive side air bag system that would enable a vehicle to meet the standard.) If a window curtain and thorax air bag 2-sensor system were used, the benefits would be 1,027 fatalities saved and 999 MAIS 3–5 injuries prevented. If a window curtain and thorax air bag 4-sensor system were used, the benefits are estimated to be 1,032 fatalities saved and 1,037 MAIS 3–5 injuries prevented.

The agency's estimates are based on the distribution of the different types of side air bag systems in the MY 2003 new vehicle fleet, *i.e.*, the percentage of side air bags providing head protection only, those providing thorax protection only, and those providing both head and thorax protection. The distribution of these systems within the new vehicle fleet has changed over the years, *e.g.*, head-only and head/thorax bags increased from MY 2002 to MY 2003, while thorax-only side air bags decreased during that period (see Table V–103 of the PEA for a distribution of side air bag systems in MY 1999–2003 vehicles). Yet, overall, the MY 2003 new vehicle fleet had a lower percent of side air bags than the MY 2002 fleet. Comments are requested on the agency's use of MY 2003 side air bag installation rates as a baseline, the trend in side air bag installation rates, and the ability of the different air bag systems to meet our oblique pole test.

Costs. In the PEA, the agency discusses the costs of the different technologies that could be used to comply with the tests and also estimates compliance tests costs. The agency tentatively concludes that the majority of vehicle manufacturers currently installing side head air bag systems might need to make their present air bags wider. They might not need to add side impact sensors to their vehicles or develop more advanced sensors to meet an oblique pole test. As noted above, NHTSA estimates that the combination air bag, 2-sensor system would be the least expensive side air bag system that would enable a vehicle to meet the standard. The cost for two wider combination head/thorax side air bags with two sensors is estimated to be $121 per vehicle. Accounting for the degree to which the MY 2003 fleet already has combination side air bags, the average vehicle incremental cost to meet the proposed requirements is estimated to be $91 per vehicle. If a window curtain, thorax side air bag system were installed with 4 sensors, the average incremental cost per vehicle would be $264. Given the number of vehicles in the MY 2003 fleet that now have wide window curtains and wide thorax side air bags with four sensors, the average vehicle incremental cost to meet this proposal is estimated to be $208 per vehicle (2002 dollars). This amounts to a range of $1.6 to $3.6 billion for the total incremental annual cost of this proposed rule.

Net Cost Per Fatality Prevented. NHTSA estimated the net costs per equivalent life saved, using a 3 and a 7 percent discount rate. Assuming manufacturers were to install a combination head/thorax 2-sensor side air bag system, at a 3 percent discount rate, the cost per equivalent life saved would be $1.8 million. Assuming manufacturers were to install separate window curtains and thorax air bags with four sensors, the high end of the range is estimated to be $3.7 million per equivalent life saved, using a 7 percent discount rate.

Net Benefits. Net benefit analysis differs from cost effectiveness analysis in that a net benefits analysis involves assigning a monetary value to the estimated benefits. A comparison is then made of the monetary value of benefits to the monetary value of costs, to derive a net benefit. NHTSA estimates that the high end of the net benefits is $1,447 million for the combination head/thorax air bags using a 3 percent discount rate. The low end is negative $202 million for the curtain plus thorax bags with four sensors, using a 7 percent discount rate. Both of these are based on a $3.5 million cost per life.

X. Proposed Leadtime and Phase-In

Oblique Pole Test. Motor vehicle manufacturers will need lead time to develop and install side impact air bags that enable their vehicles to meet the performance requirements proposed today for the oblique pole test. (Substantially less time would be required if the agency chose to utilize a 90-degree pole test and/or the SID–H3 in lieu of the ES–2re dummy.) NHTSA believes that vehicle manufacturers are at different stages with respect to designing side impact air bags, and also face different constraints and challenges, *e.g.*, differences in the technological advances incorporated in their current air bag systems, in engineering resources, in the number of vehicles for which air bags need to be redesigned, etc. NHTSA believes that these differing situations can best be accommodated by phasing-in the upgraded side impact protection requirements proposed today for head protection.

Taking into account all available information, including but not limited to the performance of current vehicles when tested obliquely at the proposed 32 km/h (20 mph) pole test speed and with the advanced dummies proposed today, the technologies that can possibly be used to meet the proposed testing requirements (*e.g.*, head curtains, widened head/thorax bags), and the relatively low percentage of the fleet that has the side air bags capable of meeting the proposed requirements, the agency is proposing to phase in the new vehicle-to-pole test requirements four years from the date of publication of a final rule. The phase-in would be implemented in accordance with the following schedule:

- 20 percent of each manufacturer's light vehicles manufactured during the production year beginning (four years after publication of a final rule; for illustration purposes, September 1, 2009);
- 50 percent of each manufacturer's light vehicles manufactured during the production year beginning September 1, 2010;
- All vehicles manufactured on or after September 1, 2011.

NHTSA believes that the proposed phase-in allows manufacturers to focus their resources in an efficient manner. The agency believes that it would not be possible for manufacturers that produce large numbers of models of passenger cars and LTVs to simultaneously design and install side air bags in all of their vehicles at once. Manufacturers have limited engineering resources, and the same resources are often used for

different models. Manufacturers have also been using their resources to take voluntary actions to improve the compatibility of LTVs and passenger cars in vehicle-to-vehicle crashes. NHTSA wants to give the vehicle manufacturers sufficient opportunity to adopt the best designs possible. At the same time, however, the agency wishes to see head protection air bags implemented expeditiously. The agency believes that a 3-year phase-in is sufficient. NHTSA estimates that about 22 percent of the 2002 model year vehicles sold in the U.S. already have some type of head side air bag system (by way of comparison, only 0.04 percent of the vehicles sold in 1998 had such systems). The agency believes the proposed phase-in balances the above competing concerns.

We are also proposing to include provisions under which manufacturers can earn credits towards meeting the applicable phase-in percentages if they meet the new requirements ahead of schedule.

As we have done with other standards, we are proposing a separate alternative to address the special problems faced by limited line and multistage manufacturers and alterers in complying with phase-ins. A phase-in generally permits vehicle manufacturers flexibility with respect to which vehicles they choose to initially redesign to comply with new requirements. However, if a manufacturer produces a very limited number of lines, a phase-in would not provide such flexibility. NHTSA is accordingly proposing to permit ''limited line'' manufacturers that produce three or fewer carlines the option of achieving full compliance when the phase-in is completed (in the illustration, September 1, 2011). (The definition of a limited line manufacturer was expanded to manufacturers of three or fewer carlines in a final rule published May 5, 2003 (68 FR 23614), as corrected September 25, 2003 (68 FR 55319).) The same flexibility would be allowed for vehicles manufactured in two or more stages and altered vehicles from the phase-in requirements. All these manufacturers (limited line, multistage and alterers) would, of course, be subject to FMVSS No. 214's existing requirements before and throughout the phase-in.

Also as with previous phase-ins, NHTSA is proposing reporting requirements to accompany the phase-in. The agency is proposing to include the reporting requirements in a new Part 598 in Title 49 of the CFR. (NHTSA has proposed to consolidate into Part 585 the phase-in reporting requirements for all the FMVSSs with phase-in schedules (68 FR 46546; 46551; August 6, 2003). If that consolidation is made final, a final rule adopting the FMVSS No. 214 reporting requirements would set forth the reporting requirements in Part 585.)

Upgraded MDB Test. The upgraded MDB test would be effective 4 years after publication of a final rule. The requirements would not be phased in because NHTSA believes that manufacturers can meet them without the need for a phase in. Countermeasures that include padding and simple redesign of the armrest area are available to some vehicles. Comments are requested on whether it would be appropriate to establish a phase-in for this requirement. Comments are also requested on whether a leadtime shorter than 4 years would be appropriate.

XI. Rulemaking Analyses and Notices

a. Executive Order 12866 (Regulatory Planning and Review) and DOT Regulatory Policies and Procedures

The agency has considered the impact of this rulemaking action under Executive Order 12866 and the Department of Transportation's regulatory policies and procedures. This rulemaking is economically significant and was reviewed by the Office of Management and Budget under E.O. 12866, ''Regulatory Planning and Review.'' The rulemaking action has also been determined to be significant under the Department's regulatory policies and procedures. NHTSA has placed in the docket a Preliminary Economic Assessment (PEA) describing the costs and benefits of this rulemaking action. The costs and benefits are summarized in section IX of this preamble.

b. Regulatory Flexibility Act

The Regulatory Flexibility Act of 1980, as amended, requires agencies to evaluate the potential effects of their proposed and final rules on small businesses, small organizations and small governmental jurisdictions. I hereby certify that this NPRM would not have a significant economic impact on a substantial number of small entities. Small organizations and small governmental units would not be significantly affected since the potential cost impacts associated with this proposed action should only slightly affect the price of new motor vehicles.

The proposed rule would directly affect motor vehicle manufacturers and indirectly affect air bag manufacturers, dummy manufacturers and seating manufacturers.

This action would not have a significant economic impact on a substantial number of small vehicle manufacturers because the vast majority of companies that manufacture motor vehicles in a single stage are not small businesses.

The agency does not believe that there are any small air bag manufacturers.

There are several manufacturers of dummies and/or dummy parts. All of them are considered small businesses. The proposed rule is expected to have a positive impact on these types of small businesses by increasing demand for dummies.

NHTSA knows of approximately 21 suppliers of seating systems, about half of which are small businesses. If seat-mounted head/thorax air bags are used to meet the new pole test and upgraded MDB test, the proposed requirements would have a positive impact on these suppliers since the cost of the seats would increase. NHTSA believes that air bag manufacturers would provide the seat suppliers with the engineering expertise necessary to meet the new requirements.

NHTSA notes that final-stage vehicle manufacturers and alterers buy incomplete vehicles, add seating systems to vehicles without seats, and/or make other modifications to the vehicle, such as replacing existing seats with new ones or raising the roofs of vehicles. A second-stage manufacturer or alterer modifying a vehicle with a seat-mounted thorax air bag might need to use the existing seat or rely on a seat manufacturer to provide the necessary technology. In either case, the impacts of this NPRM on such entities would not be significant. Final-stage manufacturers or alterers engaged in raising the roofs of vehicles would not be affected by this NPRM. This is because this document proposes to exclude vehicles with raised or altered roofs from the pole test.

Additional information concerning the potential impacts of the proposed requirements on small entities is presented in the PEA.

c. Executive Order 13132 (Federalism)

Executive Order 13132 requires NHTSA to develop an accountable process to ensure ''meaningful and timely input by State and local officials in the development of regulatory policies that have federalism implications.'' ''Policies that have federalism implications'' is defined in the Executive Order to include regulations that have ''substantial direct effects on the States, on the relationship between the national government and the States, or on the distribution of

power and responsibilities among the various levels of government.'' Under Executive Order 13132, the agency may not issue a regulation with Federalism implications, that imposes substantial direct compliance costs, and that is not required by statute, unless the Federal government provides the funds necessary to pay the direct compliance costs incurred by State and local governments, the agency consults with State and local governments, or the agency consults with State and local officials early in the process of developing the proposed regulation. NHTSA also may not issue a regulation with Federalism implications and that preempts State law unless the agency consults with State and local officials early in the process of developing the proposed regulation.

We have analyzed this proposed rule in accordance with the principles and criteria set forth in Executive Order 13132 and have determined that this proposal does not have sufficient Federal implications to warrant consultation with State and local officials or the preparation of a Federalism summary impact statement. The proposal would not have any substantial impact on the States, or on the current Federal-State relationship, or on the current distribution of power and responsibilities among the various local officials.

d. Unfunded Mandates Reform Act

The Unfunded Mandates Reform Act of 1995 (UMRA) requires Federal agencies to prepare a written assessment of the costs, benefits and other effects of proposed or final rules that include a Federal mandate likely to result in the expenditure by State, local or tribal governments, in the aggregate, or by the private sector, of more than $100 million in any one year ($100 million adjusted annually for inflation, with base year of 1995). These effects are discussed earlier in this preamble and in the PEA. UMRA also requires an agency issuing a final rule subject to the Act to select the ''least costly, most cost-effective or least burdensome alternative that achieves the objectives of the rule.'' The preamble and the PEA identify and consider a number of alternatives to the proposal. However, none of these alternatives would fully achieve the objectives of the alternative preferred by NHTSA (20 mph oblique pole test with the ES–2re and the SID-IIs). The agency believes that it has selected the least costly, most cost-effective and least burdensome alternative that achieves the objectives of the rulemaking. The agency requests comments that will aid the agency in ensuring that this is the case.

e. National Environmental Policy Act

NHTSA has analyzed this proposal for the purposes of the National Environmental Policy Act. The agency has determined that implementation of this action would not have any significant impact on the quality of the human environment.

f. Executive Order 12778 (Civil Justice Reform)

This proposal would not have any retroactive effect. Under 49 U.S.C. 21403, whenever a Federal motor vehicle safety standard is in effect, a State may not adopt or maintain a safety standard applicable to the same aspect of performance which is not identical to the Federal standard, except to the extent that the state requirement imposes a higher level of performance and applies only to vehicles procured for the State's use. 49 U.S.C. 21461 sets forth a procedure for judicial review of final rules establishing, amending or revoking Federal motor vehicle safety standards. That section does not require submission of a petition for reconsideration or other administrative proceedings before parties may file suit in court.

g. Plain Language

Executive Order 12866 requires each agency to write all rules in plain language. Application of the principles of plain language includes consideration of the following questions:

- Have we organized the material to suit the public's needs?
- Are the requirements in the rule clearly stated?
- Does the rule contain technical language or jargon that isn't clear?
- Would a different format (grouping and order of sections, use of headings, paragraphing) make the rule easier to understand?
- Would more (but shorter) sections be better?
- Could we improve clarity by adding tables, lists, or diagrams?
- What else could we do to make the rule easier to understand?

If you have any responses to these questions, please include them in your comments on this proposal.

h. Paperwork Reduction Act (PRA)

Under the PRA of 1995, a person is not required to respond to a collection of information by a Federal agency unless the collection displays a valid OMB control number. The proposal contains a collection of information because of the proposed phase-in reporting requirements. There is no burden to the general public.

The collection of information would require manufacturers of passenger cars and of trucks, buses and MPVs with a GVWR of 4,536 kg (10,000 lb) or less, to annually submit a report, and maintain records related to the report, concerning the number of such vehicles that meet the vehicle-to-pole test requirements of FMVSS No. 214 during the phase-in of those requirements. The phase-in of the vehicle-to-pole test requirements will be completed three years after publication of a final rule. The purpose of the reporting requirements is to aid the agency in determining whether a manufacturer of vehicles subject to the standard has complied with the vehicle-to-pole test requirements during the phase-in of those requirements.

We are submitting a request for OMB clearance of the collection of information required under today's proposal. These requirements and our estimates of the burden to vehicle manufacturers are as follows:

- NHTSA estimates that there are 21 manufacturers of passenger cars, multipurpose passenger vehicles, trucks, and buses with a GVWR of 4,536 kg (10,000 lb) or less;
- NHTSA estimates that the total annual reporting and recordkeeping burden resulting from the collection of information is 1,260 hours;
- NHTSA estimates that the total annual cost burden, in U.S. dollars, will be $0. No additional resources will be expended by vehicle manufacturers to gather annual production information because they already compile this data for their own use.

Under the PRA, the agency must publish a document in the **Federal Register** providing a 60-day comment period and otherwise consult with members of the public and affected agencies concerning each collection of information. The Office of Management and Budget (OMB) has promulgated regulations describing what must be included in such a document. Under OMB's regulations (5 CFR 320.8(d)), agencies must ask for public comment on the following:

(1) Whether the collection of information is necessary for the proper performance of the functions of the agency, including whether the information will have practical utility;

(2) The accuracy of the agency's estimate of the burden of the proposed collection of information, including the validity of the methodology and assumptions used;

(3) How to enhance the quality, utility, and clarity of the information to be collected; and,

(4) How to minimize the burden of the collection of information on those who are to respond, including the use of appropriate automated, electronic, mechanical, or other technological collection techniques or other forms of information technology, *e.g.*, permitting electronic submission of responses.

Organizations and individuals that wish to submit comments on the information collection requirements should direct them to NHTSA's docket for this NPRM.

i. National Technology Transfer and Advancement Act

Under the National Technology Transfer and Advancement Act of 1995 (NTTAA) (Pub. L. 104–113),

> all Federal agencies and departments shall use technical standards that are developed or adopted by voluntary consensus standards bodies, using such technical standards as a means to carry out policy objectives or activities determined by the agencies and departments.

Voluntary consensus standards are technical standards (*e.g.*, materials specifications, test methods, sampling procedures, and business practices) that are developed or adopted by voluntary consensus standards bodies, such as the International Organization for Standardization (ISO) and the Society of Automotive Engineers. The NTTAA directs us to provide Congress, through OMB, explanations when we decide not to use available and applicable voluntary consensus standards.

When NHTSA developed the vehicle-to-pole test that was adopted into FMVSS No. 201, the agency based the test on a proposed ISO test procedure found in ISO/SC10/WG1 (October 2001). In developing today's NPRM, we considered the draft ISO standard and ISO draft technical reports related to side air bags performance to guide our decision-making to the extent consistent with the Safety Act. The notable differences between the draft ISO standard and this proposal relate to: The diameter of the pole (ISO draft technical reports recommend the use of 350 mm pole, while NHTSA uses a 254 mm pole in FMVSS No. 201 and would use such a pole in FMVSS No. 214), and the angle of approach of the test vehicle to the pole (ISO specifies 90 degrees, while our NPRM proposes to use a 75 degree angle). The agency's reasons for proposing a 254 mm pole and an oblique, 32 km/h (20 mph), angle of approach were discussed earlier in this document.

XII. Public Participation

How Can I Influence NHTSA's Thinking on This Proposed Rule?

In developing this proposal, we tried to address the concerns of all our stakeholders. Your comments will help us improve this proposed rule. We invite you to provide different views on options we propose, new approaches we haven't considered, new data, how this proposed rule may affect you, or other relevant information. We welcome your views on all aspects of this proposed rule, but request comments on specific issues throughout this document. Your comments will be most effective if you follow the suggestions below:

—Explain your views and reasoning as clearly as possible.
—Provide solid technical and cost data to support your views.
—If you estimate potential costs, explain how you arrived at the estimate.
—Tell us which parts of the proposal you support, as well as those with which you disagree.
—Provide specific examples to illustrate your concerns.
—Offer specific alternatives.
—Refer your comments to specific sections of the proposal, such as the units or page numbers of the preamble, or the regulatory sections.
—Be sure to include the name, date, and docket number with your comments.

How Do I Prepare and Submit Comments?

Your comments must be written and in English. To ensure that your comments are correctly filed in the Docket, please include the docket number of this document in your comments.

Your comments must not be more than 15 pages long (49 CFR 553.21). We established this limit to encourage you to write your primary comments in a concise fashion. However, you may attach necessary additional documents to your comments. There is no limit on the length of the attachments.

Please submit two copies of your comments, including the attachments, to Docket Management at the address given above under **ADDRESSES**.

Comments may also be submitted to the docket electronically by logging onto the Dockets Management System Web site at Click on ''Help & Information'' or ''Help/Info'' to obtain instructions for filing the document electronically.

How Can I Be Sure That My Comments Were Received?

If you wish Docket Management to notify you upon its receipt of your comments, enclose a self-addressed, stamped postcard in the envelope containing your comments. Upon receiving your comments, Docket Management will return the postcard by mail.

How Do I Submit Confidential Business Information?

If you wish to submit any information under a claim of confidentiality, you should submit three copies of your complete submission, including the information you claim to be confidential business information, to the Chief Counsel, NHTSA, at the address given above under **FOR FURTHER INFORMATION CONTACT**. In addition, you should submit two copies, from which you have deleted the claimed confidential business information, to Docket Management at the address given above under **ADDRESSES.** When you send a comment containing information claimed to be confidential business information, you should include a cover letter setting forth the information specified in our confidential business information regulation. (49 CFR part 512.)

Will the Agency Consider Late Comments?

We will consider all comments that Docket Management receives before the close of business on the comment closing date indicated above under **DATES.** To the extent possible, we will also consider comments that Docket Management receives after that date. If Docket Management receives a comment too late for us to consider it in developing a final rule (assuming that one is issued), we will consider that comment as an informal suggestion for future rulemaking action.

How Can I Read the Comments Submitted by Other People?

You may read the comments received by Docket Management at the address given above under **ADDRESSES.** The hours of the Docket are indicated above in the same location.

You may also see the comments on the Internet. To read the comments on the Internet, take the following steps:

(1) Go to the Docket Management System (DMS) Web page of the Department of Transportation (*http://dms.dot.gov/*).

(2) On that page, click on ''search.''

(3) On the next page (*http://dms.dot.gov/search/*), type in the four-digit docket number shown at the beginning of this document. Example: If the docket number were ''NHTSA–2002–1234,'' you would type ''1234.''

After typing the docket number, click on ''search.''

(4) On the next page, which contains docket summary information for the docket you selected, click on the desired comments. You may download the comments. However, since the comments are imaged documents, instead of word processing documents, the downloaded comments are not word searchable.

Please note that even after the comment closing date, we will continue to file relevant information in the Docket as it becomes available. Further, some people may submit late comments. Accordingly, we recommend that you periodically check the Docket for new material. Upon receiving the comments, the docket supervisor will return the postcard by mail.

Anyone is able to search the electronic form of all comments received into any of our dockets by the name of the individual submitting the comment (or signing the comment, if submitted on behalf of an association, business, labor union, *etc.*). You may review DOT's complete Privacy Act Statement in the **Federal Register** published on April 11, 2000 (Volume 65, Number 70; Pages 19477–78) or you may visit *http://dms.dot.gov.*

Appendix A—Glossary

Categories of Side Air Bags

Combined (also called ''integrated'' or ''combo'') side air bag system. Incorporates both a head air bag system and a torso side air bag into one unit that is typically installed in the seat back.

Curtain. A ''curtain'' type side air bag system (referred to as ''curtain bags,'' window curtains, or air curtains, AC). A curtain is an inflatable device that is fixed at two points, one at the front end of the vehicle's A-pillar and the other along the roof rail near the C-pillar. It is installed under the roof rail headliner. This system would provide head and neck protection for front and possibly rear seat occupants in outboard seating positions in side crashes. The curtain air bags can be designed to provide extended inflation time (compared to frontal air bags), which could provide occupant protection during vehicle rollovers (when deployed).

Head air bag system (or head protection system (HPS)). The term comprises different types of head protection systems, such as curtain bags or ITS, installed either as a stand alone system or combined with a thorax side air bag.

Inflatable Tubular Structure (ITS). The ITS is an inflatable device that is fixed at two points, one at the front end of the vehicle's A-pillar and the other at the back end to the roof rail behind the B-pillar. It is installed under the roof rail headliner. When deployed, the ITS inflates to become a self supporting tube that spans the vehicle's side window diagonally and provides head and neck protection. The ITS remains inflated for a few seconds and can provide some additional protection during rollover events and secondary impacts.

Side impact air bag (SIAB). The term refers to side air bags generally.

Torso (or thorax) side air bag. A ''torso'' (or ''thorax'') side air bag that can be installed in either the seat back or the vehicle door. As the name indicates, the system would provide protection for the torso but not for the head.

List of Subjects

49 CFR Part 571

Imports, Incorporation by reference, Motor vehicle safety, Reporting and recordkeeping requirements, Tires.

49 CFR Part 598

Motor vehicle safety, Reporting and recordkeeping requirements.

In consideration of the foregoing, NHTSA proposes to amend 49 CFR chapter V as set forth below.

PART 571—FEDERAL MOTOR VEHICLE SAFETY STANDARDS

1. The authority citation for Part 571 would continue to read as follows:

Authority: 49 U.S.C. 322, 30111, 30115, 30117 and 30166; delegation of authority at 49 CFR 1.50.

2. Section 571.201 would be amended by revising S6.1(b)(3) and S6.2(b)(3), and adding S6.1(b)(4) and S6.2(b)(4) to read as follows:

§ 571.201 Standard No. 201; Occupant protection in interior impact.

* * * * *

S6.1 *Vehicles manufactured on or after September 1, 1998.* * * *

(b) * * *

(3) Except as provided in S6.1(b)(4), each vehicle shall, when equipped with a dummy test device specified in 49 CFR part 572, subpart M, and tested as specified in S8.16 through S8.28, comply with the requirements specified in S7 when crashed into a fixed, rigid pole of 254 mm in diameter, at any velocity between 24 kilometers per hour (15 mph) and 29 kilometers per hour (18 mph).

(4) Vehicles certified as complying with the vehicle-to-pole requirements of S9.2.1, S9.2.2 and S9.2.3 of 49 CFR 571.214, *Side Impact Protection,* need not comply with the requirements specified in S7 of this section.

* * * * *

S6.2 *Vehicles manufactured on or after September 1, 2002 and vehicles built in two or more stages manufactured after September 1, 2006.* * * *

(b) * * *

(3) Except as provided in S6.2(b)(4), each vehicle shall, when equipped with a dummy test device specified in 49 CFR part 572, subpart M, and tested as specified in S8.16 through S8.28, comply with the requirements specified in S7 when crashed into a fixed, rigid pole of 254 mm in diameter, at any velocity between 24 kilometers per hour (15 mph) and 29 kilometers per hour (18 mph).

(4) Vehicles certified as complying with the vehicle-to-pole requirements of S9.2.1, S9.2.2 and S9.2.3 of 49 CFR 571.214, *Side Impact Protection,* need not comply with the requirements specified in S7 of this section.

* * * * *

3. Section 571.214 would be revised to read as follows:

§ 571.214 Standard No. 214; Side impact protection.

S1 *Scope and purpose.*

(a) *Scope.* This standard specifies performance requirements for protection of occupants in side impacts.

(b) *Purpose.* The purpose of this standard is to reduce the risk of serious and fatal injury to occupants of passenger cars, multipurpose passenger vehicles, trucks and buses in side impacts by specifying strength requirements for side doors, limiting the forces, deflections and accelerations measured on anthropomorphic dummies in test crashes, and by other means.

S2 *Applicability.* This standard applies to passenger cars, and to multipurpose passenger vehicles, trucks and buses with a gross vehicle weight rating (GVWR) of 4,536 kilograms (kg) (10,000 pounds (lb)) or less, except for walk-in vans, or otherwise specified.

S3 *Definitions.*

Altered roof is used as defined in paragraph S4 of 49 CFR 571.216.

Contoured means, with respect to a door, that the lower portion of its front or rear edge is curved upward, typically to conform to a wheel well.

Double side doors means a pair of hinged doors with the lock and latch mechanisms located where the door lips overlap.

Limited line manufacturer means a manufacturer that sells three or fewer carlines, as that term is defined in 49 CFR 585.4, in the United States during a production year.

Raised roof is used as defined in paragraph S4 of 49 CFR 571.216.

Walk-in van means a special cargo/mail delivery vehicle that has only one designated seating position. That designated seating position must be forward facing and for use only by the driver. The vehicle usually has a thin and light sliding (or folding) side door for easy operation and a high roof

clearance that a person of medium stature can enter the passenger compartment area in an up-right position.

S4 *Requirements.* Subject to the exceptions of S5—

(a) *Passenger cars.* Passenger cars must meet the requirements set forth in S6 (door crush resistance), S7 (moving deformable barrier test), and S9 (vehicle-to-pole test), subject to the phased-in application of S9.

(b) *Multipurpose passenger vehicles, trucks and buses with a GVWR of 2,722 kg or less (6,000 lb or less).* Multipurpose passenger vehicles, trucks and buses with a GVWR of 2,722 kg or less). (6,000 lb or less) must meet the requirements set forth in S6 (door crush resistance), S7 (moving deformable barrier test), and S9 (vehicle-to-pole test), subject to the phased-in application of S9.

(c) *Multipurpose passenger vehicles, trucks and buses with a GVWR greater than 2,722 kg (6,000 lb).* Multipurpose passenger vehicles, trucks and buses with a GVWR greater than 2,722 kg (6,000 lb) must meet the requirements set forth in S6 (door crush resistance) and S9 (vehicle-to-pole test), subject to the phased-in application of S9.

S5 *General exclusions.*

(a) *Exclusions from S6 (door crush resistance).* A vehicle need not meet the requirements of S6 (door crush resistance) for—

(1) Any side door located so that no point on a ten-inch horizontal longitudinal line passing through and bisected by the H-point of a manikin placed in any seat, with the seat adjusted to any position and the seat back adjusted as specified in S8.4, falls within the transverse, horizontal projection of the door's opening,

(2) Any side door located so that no point on a ten-inch horizontal longitudinal line passing through and bisected by the H-point of a manikin placed in any seat recommended by the manufacturer for installation in a location for which seat anchorage hardware is provided, with the seat adjusted to any position and the seat back adjusted as specified in S8.3, falls within the transverse, horizontal projection of the door's opening,

(3) Any side door located so that a portion of a seat, with the seat adjusted to any position and the seat back adjusted as specified in S8.3, falls within the transverse, horizontal protection of the door's opening, but a longitudinal vertical plane tangent to the outboard side of the seat cushion is more than 254 mm (10 inches) from the innermost point on the inside surface of the door at a height between the H-point and shoulder reference point (as shown in Figure 1 of Federal Motor Vehicle Safety Standard No. 210 (49 CFR 571.210)) and longitudinally between the front edge of the cushion with the seat adjusted to its forwardmost position and the rear edge of the cushion with the seat adjusted to its rearmost position.

(4) Any side door that is designed to be easily attached to or removed (*e.g.*, using simple hand tools such as pliers and/or a screwdriver) from a motor vehicle manufactured for operation without doors.

(b) *Exclusions from S7 (moving deformable barrier test).* The following vehicles are excluded from S7 (moving deformable barrier test):

(1) Motor homes, tow trucks, dump trucks, ambulances and other emergency rescue/medical vehicles (including vehicles with fire-fighting equipment), vehicles equipped with wheelchair lifts, and vehicles which have no doors or exclusively have doors that are designed to be easily attached or removed so the vehicle can be operated without doors.

(2) Passenger cars with a wheelbase greater than 130 inches need not meet the requirements of S7 as applied to the rear seat.

(3) Passenger cars, multipurpose passenger vehicles, trucks and buses need not meet the requirements of S7 (moving deformable barrier test) as applied to the rear seat for side-facing rear seats and for rear seating areas that are so small that a part 572 subpart [subpart number to be determined] dummy representing a 5th percentile female cannot be accommodated according to the positioning procedure specified in S12.3.4 of this standard.

(4) Multipurpose passenger vehicles, trucks and buses with a GVWR of more than 2,722 kg (more than 6,000 lb) need not meet the requirements of S7 (moving deformable barrier test).

(c) *Exclusions from S9 (vehicle-to-pole test).* The following vehicles are excluded from S9 (vehicle-to-pole test):

(1) Motor homes;

(2) Tow trucks;

(3) Dump trucks;

(4) Ambulances and other emergency rescue/medical vehicles (including vehicles with fire-fighting equipment);

(5) Vehicles equipped with wheelchair lifts,

(6) Vehicles with a raised roof or altered roof; and

(7) Vehicles which have no doors, or exclusively have doors that are designed to be easily attached or removed so that the vehicle can be operated without doors.

S6 *Door crush resistance requirements.* Except as provided in section S5, each vehicle shall be able to meet the requirements of either, at the manufacturer's option, S6.1 or S6.2, when any of its side doors that can be used for occupant egress is tested according to procedures described in S6.3 of this standard (49 CFR 571.214).

S6.1 With any seats that may affect load upon or deflection of the side of the vehicle removed from the vehicle, each vehicle must be able to meet the requirements of S6.1.1 through S6.1.3.

S6.1.1 *Initial crush resistance.* The initial crush resistance shall not be less than 10,000 N (2,250 lb).

S6.1.2 *Intermediate crush resistance.* The intermediate crush resistance shall not be less than 1,557 N (3,500 lb).

S6.1.3 *Peak crush resistance.* The peak crush resistance shall not be less than two times the curb weight of the vehicle or 3,114 N (7,000 lb), whichever is less.

S6.2 With seats installed in the vehicle, and located in any horizontal or vertical position to which they can be adjusted and at any seat back angle to which they can be adjusted, each vehicle must be able to meet the requirements of S6.2.1 through S6.2.3.

S6.2.1 *Initial crush resistance.* The initial crush resistance shall not be less than 10,000 N (2,250 lb).

S6.2.2 *Intermediate crush resistance.* The intermediate crush resistance shall not be less than 1,946 N (4,375 lb).

S6.2.3 *Peak crush resistance.* The peak crush resistance shall not be less than three and one half times the curb weight of the vehicle or 5,338 N (12,000 lb), whichever is less.

S6.3 *Test procedures for door crush resistance.* The following procedures apply to determining compliance with S6.1 and S6.2 of S6, *Door crush resistance requirements.*

(a) Place side windows in their uppermost position and all doors in locked position. Place the sill of the side of the vehicle opposite to the side being tested against a rigid unyielding vertical surface. Fix the vehicle rigidly in position by means of tiedown attachments located at or forward of the front wheel centerline and at or rearward of the rear wheel centerline.

(b) Prepare a loading device consisting of a rigid steel cylinder or semi-cylinder 305 mm (12 inches) in diameter with an edge radius of 13 mm (½inch). The length of the loading device shall be such that—

(1) For doors with windows, the top surface of the loading device is at least 13 mm (½inch) above the bottom edge

of the door window opening but not of a length that will cause contact with any structure above the bottom edge of the door window opening during the test.

(2) For doors without windows, the top surface of the loading device is at the same height above the ground as when the loading device is positioned in accordance with paragraph (b)(1) of this section for purposes of testing a front door with windows on the same vehicle.

(c) Locate the loading device as shown in Figure 1 (side view) of this section so that—

(1) Its longitudinal axis is vertical.

(2) Except as provided in paragraphs (c)(2)(i) and (ii) of this section, its longitudinal axis is laterally opposite the midpoint of a horizontal line drawn across the outer surface of the door 127 mm (5 inches) above the lowest point of the door, exclusive of any decorative or protective molding that is not permanently affixed to the door panel.

(i) For contoured doors on trucks, buses, and multipurpose passenger vehicles with a GVWR of 4,536 kg (10,000 lb) or less, if the length of the horizontal line specified in this paragraph (c)(2) is not equal to or greater than 559 mm (22 inches), the line is moved vertically up the side of the door to the point at which the line is 559 mm (22 inches) long. The longitudinal axis of the loading device is then located laterally opposite the midpoint of that line.

(ii) For double side doors on trucks, buses, and multipurpose passenger vehicles with a GVWR of 4,536 kg (10,000 lb) or less, its longitudinal axis is laterally opposite the midpoint of a horizontal line drawn across the outer surface of the double door span, 127 mm (5 inches) above the lowest point on the doors, exclusive of any decorative or protective molding that is not permanently affixed to the door panel.

(3) Except as provided in paragraphs (c)(3)(i) and (ii) of this section, its bottom surface is in the same horizontal plane as the horizontal line drawn across the outer surface of the door 127 mm (5 inches) above the lowest point of the door, exclusive of any decorative or protective molding that is not permanently affixed to the door panel.

(i) For contoured doors on trucks, buses, and multipurpose passenger vehicles with a GVWR of 4,536 kg (10,000 lb) or less, its bottom surface is in the lowest horizontal plane such that every point on the lateral projection of the bottom surface of the device on the door is at least 127 mm (5 inches), horizontally and vertically, from any edge of the door panel, exclusive of any decorative or protective molding that is not permanently affixed to the door panel.

(ii) For double side doors, its bottom surface is in the same horizontal plane as a horizontal line drawn across the outer surface of the double door span, 127 mm (5 inches) above the lowest point of the doors, exclusive of any decorative or protective molding that is not permanently affixed to the door panel.

(d) Using the loading device, apply a load to the outer surface of the door in an inboard direction normal to a vertical plane along the vehicle's longitudinal centerline. Apply the load continuously such that the loading device travel rate does not exceed 12.7 mm (0.5 inch) per second until the loading device travels 457 mm (18 inches). Guide the loading device to prevent it from being rotated or displaced from its direction of travel. The test must be completed within 120 seconds.

(e) Record applied load versus displacement of the loading device, either continuously or in increments of not more than 25.4 mm (1 inch) or 91 kg (200 pounds) for the entire crush distance of 457 mm (18 inches).

(f) Determine the initial crush resistance, intermediate crush resistance, and peak crush resistance as follows:

(1) From the results recorded in paragraph (e) of this section, plot a curve of load versus displacement and obtain the integral of the applied load with respect to the crush distances specified in paragraphs (f) (2) and (3) of this section. These quantities, expressed in mm-kN (inch-pounds) and divided by the specified crush distances, represent the average forces in pounds required to deflect the door those distances.

(2) The initial crush resistance is the average force required to deform the door over the initial 152 mm (6 inches) of crush.

(3) The intermediate crush resistance is the average force required to deform the door over the initial 305 mm (12 inches) of crush.

(4) The peak crush resistance is the largest force recorded over the entire 457 mm (18-inch) crush distance.

BILLING CODE 4910–59–P

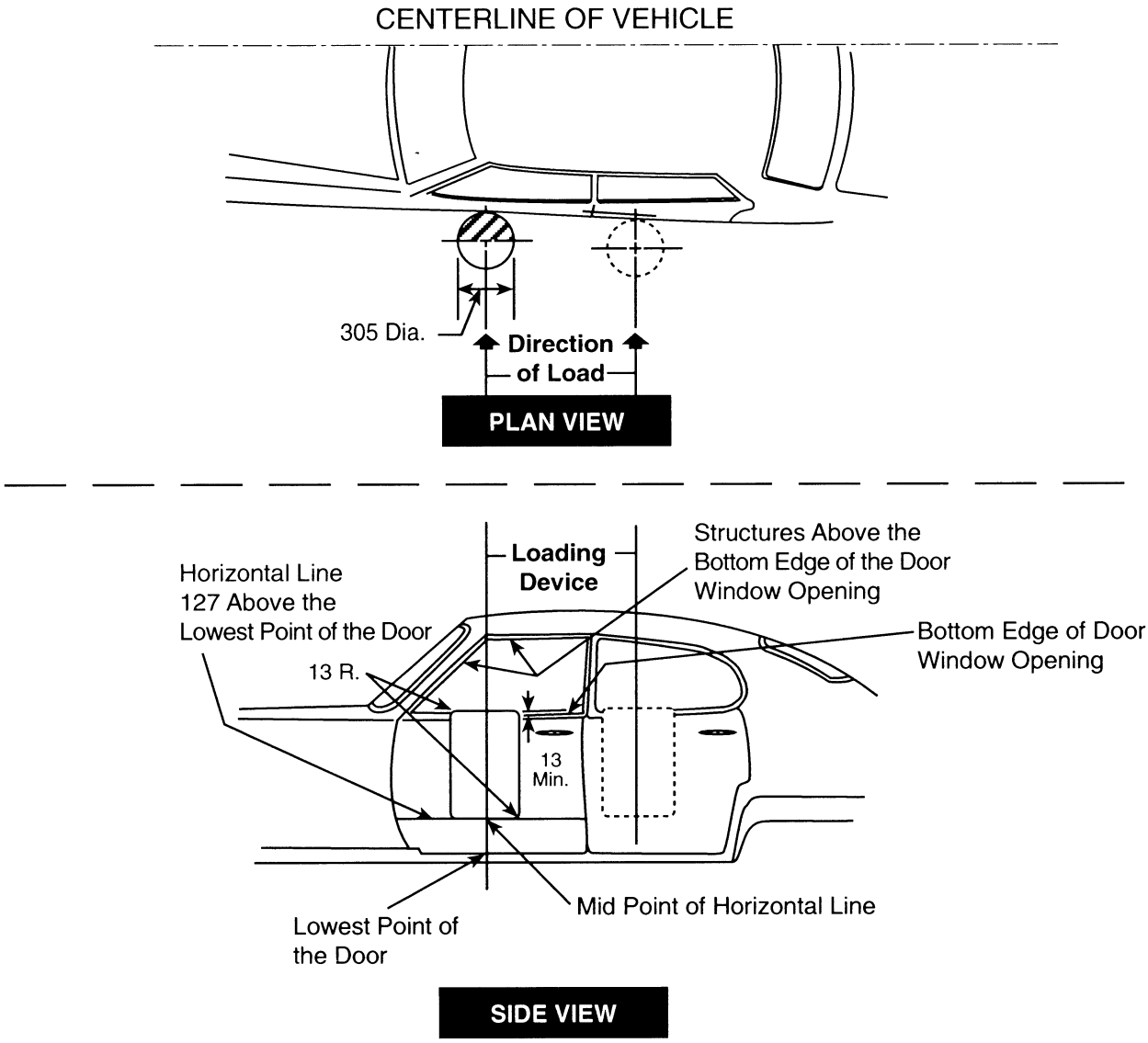

Figure 1—LOADING DEVICE LOCATION AND APPLICATION TO THE DOOR
All dimensions in millimeters (mm)

BILLING CODE 4910–59–C

S7 *Moving Deformable Barrier Requirements.* Except as provided in section S5, when tested under the conditions of S8 each vehicle shall meet the following requirements in a 53 ± 1.0 km/h (33.5 mph) impact in which the vehicle is struck on either side by a moving deformable barrier.

S7.1 *Vehicles manufactured before [four years from the publication date of the final rule. For illustration purposes, assume that the 4-year date is September 1, 2009].* For vehicles manufactured before September 1, 2009, the test dummy specified in 49 CFR part 572, subpart F (SID) is placed in the front and rear outboard seating positions on the struck side of the vehicle, as specified in S11 and S12 of this standard (49 CFR 571.214). (Vehicles manufactured before September 1, 2009 may meet S7.2, at the manufacturer's option.) When using the part 572, subpart F dummy, the following performance requirements must be met.

(a) *Thorax.* The Thoracic Trauma Index (TTI(d)) shall not exceed:

(1) 85 g for a passenger car with four side doors, and for any multipurpose passenger vehicle, truck, or bus; and,

(2) 90 g for a passenger car with two side doors, when calculated in accordance with the following formula:

$$TTI(d) = \tfrac{1}{2}(G_R + G_{LS})$$

Where the term "G_R" is the greater of the peak accelerations of either the upper or lower rib, expressed in g's and the term "G_{LS}" is the lower spine (T12) peak acceleration, expressed in g's. The peak acceleration values are obtained in accordance with the procedure specified in S11.5.

(b) *Pelvis.* The peak lateral acceleration of the pelvis, as measured in accordance with S11.5, shall not exceed 130 g's.

S7.2 *Vehicles manufactured on or after September 1, 2009.* Vehicles manufactured on or after September 1,

2009 must meet the requirements in S7.2.1 and S7.2.2 when tested with the test dummy specified in those sections. The agency has the option of using either dummy in its compliance test. The test dummy specified in S7.2.1 or S7.2.2 is placed and positioned in the front and rear outboard seating positions on the struck side of the vehicle, as specified in S11 and S12 of this standard (49 CFR 571.214).

S7.2.1 *Dynamic performance requirements using the part 572 subpart [to be determined] dummy (ES–2re 50th percentile male) dummy.* Use the part 572 subpart [to be determined] ES–2re dummy specified in S11 with measurements in accordance with S11.5.

(a) The HIC shall not exceed 1000 when calculated in accordance with the following formula:

$$HIC = \left[\frac{1}{(t_2 - t_1)} \int_{t_1}^{t_2} a dt \right]^{2.5} (t_2 - t_1)$$

Where the term *a* is the resultant head acceleration at the center of gravity of the dummy head expressed as a multiple of g (the acceleration of gravity), and t_1 and t_2 are any two points in time during the impact which are separated by not more than a 36 millisecond time interval and where t_1 is less than t_2.

(b) Thorax. The deflection of any of the upper, middle, and lower ribs, shall not exceed 42 mm (1.65 inches).

(c) The resultant lower spine acceleration must not exceed 82 g.

(d) Force measurements.

(1) The sum of the front, middle and rear abdominal forces, shall not exceed 2,500 N (562 lb).

(2) The pubic symphysis force shall not exceed 6,000 N (1,350 pounds).

S7.2.2 *Dynamic performance requirements using the Part 572 Subpart [to be determined](SID–IIsFRG 5th percentile female) dummy.* Use the Part 572 Subpart [to be determined] SID–IIsFRG 5th percentile female dummy specified in S11 with measurements in accordance with S11.5.

(a) The HIC shall not exceed 1000 when calculated in accordance with the following formula:

$$HIC = \left[\frac{1}{(t_2 - t_1)} \int_{t_1}^{t_2} a dt \right]^{2.5} (t_2 - t_1)$$

Where the term *a* is the resultant head acceleration expressed as a multiple of g (the acceleration of gravity), and t_1 and t_2 are any two points in time during the impact which are separated by not more than a 36 millisecond time interval.

(b) The resultant lower spine acceleration shall not exceed 82 g.

(c) The sum of the acetabular and iliac pelvic forces shall not exceed 5,100 N (1,147 lb).

S7.3 *Door opening.*

(a) Any side door that is struck by the moving deformable barrier shall not separate totally from the vehicle.

(b) Any door (including a rear hatchback or tailgate) that is not struck by the moving deformable barrier shall meet the following requirements:

(1) The door shall not disengage from the latched position;

(2) The latch shall not separate from the striker, and the hinge components shall not separate from each other or from their attachment to the vehicle.

(3) Neither the latch nor the hinge systems of the door shall pull out of their anchorages.

S8. *Test conditions for determining compliance with moving deformable barrier requirements.* General test conditions for determining compliance with the moving deformable barrier test are specified below. Additional specifications may also be found in S12 of this standard (49 CFR 571.214).

S8.1 *Test weight.* Each vehicle is loaded to its unloaded vehicle weight, plus 136 kg (300 pounds) or its rated cargo and luggage capacity (whichever is less), secured in the luggage or load-carrying area, plus the weight of the necessary anthropomorphic test dummies. Any added test equipment is located away from impact areas in secure places in the vehicle. The vehicle's fuel system is filled in accordance with the following procedure. With the test vehicle on a level surface, pump the fuel from the vehicle's fuel tank and then operate the engine until it stops. Then, add Stoddard solvent to the test vehicle's fuel tank in an amount that is equal to not less than 92 percent and not more than 94 percent of the fuel tank's usable capacity stated by the vehicle's manufacturer. In addition, add the amount of Stoddard solvent needed to fill the entire fuel system from the fuel tank through the engine's induction system.

S8.2 *Vehicle test attitude.* When the vehicle is in its ''as delivered,'' ''fully loaded'' and ''as tested'' condition, locate the vehicle on a flat, horizontal surface to determine the vehicle attitude. Use the same level surface or reference plane and the same standard points on the test vehicle when determining the ''as delivered,'' ''fully loaded'' and ''as tested'' conditions. Measure the angles relative to a horizontal plane, front-to-rear and from left-to-right for the ''as delivered,'' ''fully loaded,'' and ''as tested'' conditions. The front-to-rear angle (pitch) shall be measured along a fixed reference on the driver's and front passenger's door sill. Mark where the angles are taken on the door sill. The left to right angle (roll) is measured along a fixed reference point at the front and rear of the vehicle at the vehicle longitudinal center plane. Mark where the angles are measured. The ''as delivered'' condition is the vehicle as received at the test site, with 100 percent of all fluid capacities and all tires inflated to the manufacturer's specifications listed on the vehicle's tire placard. When the vehicle is in its ''fully loaded'' condition, measure the angle between the driver's door sill and the horizontal, at the same place the ''as delivered'' angle was measured. The ''fully loaded condition'' is the test vehicle loaded in accordance with S8.1 of this standard (49 CFR 571.214). The load placed in the cargo area is centered over the longitudinal centerline of the vehicle. The vehicle ''as tested'' pitch and roll angles are between the ''as delivered'' and ''fully loaded'' condition, inclusive.

S8.3 *Adjustable seats.*

S8.3.1 *50th Percentile Male Dummy In Front Seats.*

S8.3.1.1 *Lumbar support adjustment.* Position adjustable lumbar supports so that the lumbar support is in its lowest, retracted or deflated adjustment position.

S8.3.1.2 *Other seat adjustments.* Position any adjustable parts of the seat that provide additional support so that they are in the lowest or non-deployed adjustment position. Position any adjustable head restraint in the lowest and most forward position.

S8.3.1.3 *Seat position adjustment.* If the passenger seat does not adjust independently of the driver seat, the driver seat shall control the final position of the passenger seat.

S8.3.1.3.1 Using only the controls that primarily move the seat and seat cushion independent of the seat back in the fore and aft directions, move the seat cushion reference point (SCRP) to the rearmost position. Using any part of any control, other than those just used, determine the full range of angles of the seat cushion reference line and set the seat cushion reference line to the middle of the range. Using any part of any control other than those that primarily move the seat or seat cushion fore and aft, while maintaining the seat cushion reference line angle, place the SCRP to its lowest position.

S8.3.1.3.2 Using only the control that primarily moves the seat fore and aft, move the seat cushion reference

point to the mid travel position. If an adjustment position does not exist midway between the forwardmost and rearmost positions, the closest adjustment position to the rear of the midpoint is used.

S8.3.1.3.3 If the seat or seat cushion height is adjustable, other than by the controls that primarily move the seat or seat cushion fore and aft, set the height of the seat cushion reference point to the minimum height, with the seat cushion reference line angle set as closely as possible to the angle determined in S8.3.1.3.1. Mark location of the seat for future reference.

S8.3.2. *5th Percentile Female Dummy In Front Seats.*

S8.3.2.1 *Lumbar support adjustment.* Position adjustable lumbar supports so that the lumbar support is in its lowest, retracted or deflated adjustment position.

S8.3.2.2 *Other seat adjustments.* Position any adjustable parts of the seat that provide additional support so that they are in the lowest or non-deployed adjustment position. Position any adjustable head restraint in the lowest and most forward position.

S8.3.2.3 *Seat position adjustment.* If the passenger seat does not adjust independently of the driver seat, the driver seat shall control the final position of the passenger seat.

S8.3.2.3.1 Using only the controls that primarily move the seat and seat cushion independent of the seat back in the fore and aft directions, move the seat cushion reference point (SCRP) to the rearmost position. Using any part of any control, other than those just used, determine the full range of angles of the seat cushion reference line and set the seat cushion reference line to the middle of the range. Using any part of any control other than those that primarily move the seat or seat cushion fore and aft, while maintaining the seat cushion reference line angle, place the SCRP to its lowest position.

S8.3.2.3.2 Using only the control that primarily moves the seat fore and aft, move the seat reference point to the most forward position.

S8.3.2.3.3 If the seat or seat cushion height is adjustable, other than by the controls that primarily move the seat or seat cushion fore and aft, set the seat reference point to the midpoint height, with the seat cushion reference line angle set as close as possible to the angle determined in S8.3.2.3.1. Mark location of the seat for future reference.

S8.3.3 *50th Percentile Male and 5th Percentile Female Dummies in Second Row Seat.*

S8.3.3.1 *Lumbar support adjustment.* Position adjustable lumbar supports so that the lumbar support is in its lowest, retracted or deflated adjustment position.

S8.3.3.2 *Other seat adjustments.* Position any adjustable parts of the seat that provide additional support so that they are in the lowest or non-deployed adjustment position. Position any adjustable head restraint in the lowest and most forward position.

S8.3.3.3 *Seat position adjustment.* Using only the controls that primarily move the seat and seat cushion independent of the seat back in the fore and aft directions, move the seat cushion reference point (SCRP) to the rearmost position. Using any part of any control, other than those just used, determine the full range of angles of the seat cushion reference line and set the seat cushion reference line to the middle of the range. Using any part of any control other than those that primarily move the seat or seat cushion fore and aft, while maintaining the seat cushion reference line angle, place the SCRP to its lowest position. Mark location of the seat for future reference.

S8.3.4 Adjustable seat back placement. When using the 50th percentile male dummy, adjustable seat backs are placed in the manufacturer's nominal design riding position in the manner specified by the manufacturer. If the position is not specified, set the seat back at the first detent rearward of 25 degrees from the vertical. Each adjustable head restraint is placed in its highest adjustment position. Adjustable seat back placement for the 5th percentile female dummy is specified in S12.3.

S8.4 *Adjustable steering wheel.* Adjustable steering controls are adjusted so that the steering wheel hub is at the geometric center of the locus it describes when it is moved through its full range of driving positions. If there is no setting detent in the mid-position, lower the steering wheel to the detent just below the mid-position. If the steering column is telescoping, place the steering column in the mid-position. If there is no mid-position, move the steering wheel rearward one position from the mid-position.

S8.5 *Windows and sunroofs.* Movable vehicle windows and vents are placed in the fully closed position on the struck side of the vehicle. Any sunroof shall be placed in the fully closed position.

S8.6 *Convertible tops.* Convertibles and open-body type vehicles have the top, if any, in place in the closed passenger compartment configuration.

S8.7 *Doors.* Doors, including any rear hatchback or tailgate, are fully closed and latched but not locked.

S8.8 *Transmission and brake engagement.* For a vehicle equipped with a manual transmission, the transmission is placed in second gear. For a vehicle equipped with an automatic transmission, the transmission is placed in neutral. For all vehicles, the parking brake is engaged.

S8.9 *Moving deformable barrier.* The moving deformable barrier conforms to the dimensions shown in Figure 2 and specified in 49 CFR part 587.

S8.10 *Impact configuration.* The test vehicle (vehicle A in Figure 3) is stationary. The line of forward motion of the moving deformable barrier (vehicle B in Figure 3) forms an angle of 63 degrees with the centerline of the test vehicle. The longitudinal centerline of the moving deformable barrier is perpendicular to the longitudinal centerline of the test vehicle when the barrier strikes the test vehicle. In a test in which the test vehicle is to be struck on its left (right) side: All wheels of the moving deformable barrier are positioned at an angle of 27 ± 1 degrees to the right (left) of the centerline of the moving deformable barrier; and the left (right) forward edge of the moving deformable barrier is aligned so that a longitudinal plane tangent to that side passes through the impact reference line within a tolerance of ± 51 mm (2 inches) when the barrier strikes the test vehicle.

BILLING CODE 4910–59–P

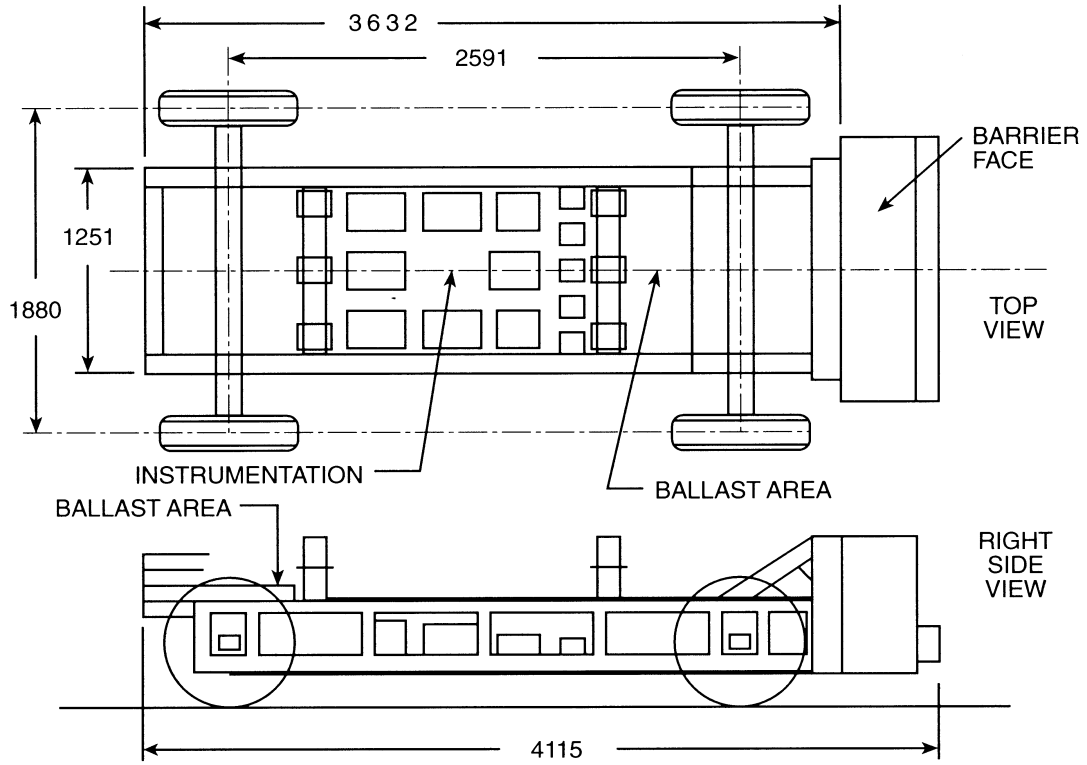

NHTSA VEHICLE SIMULATOR
All dimensions in millimeters (mm)

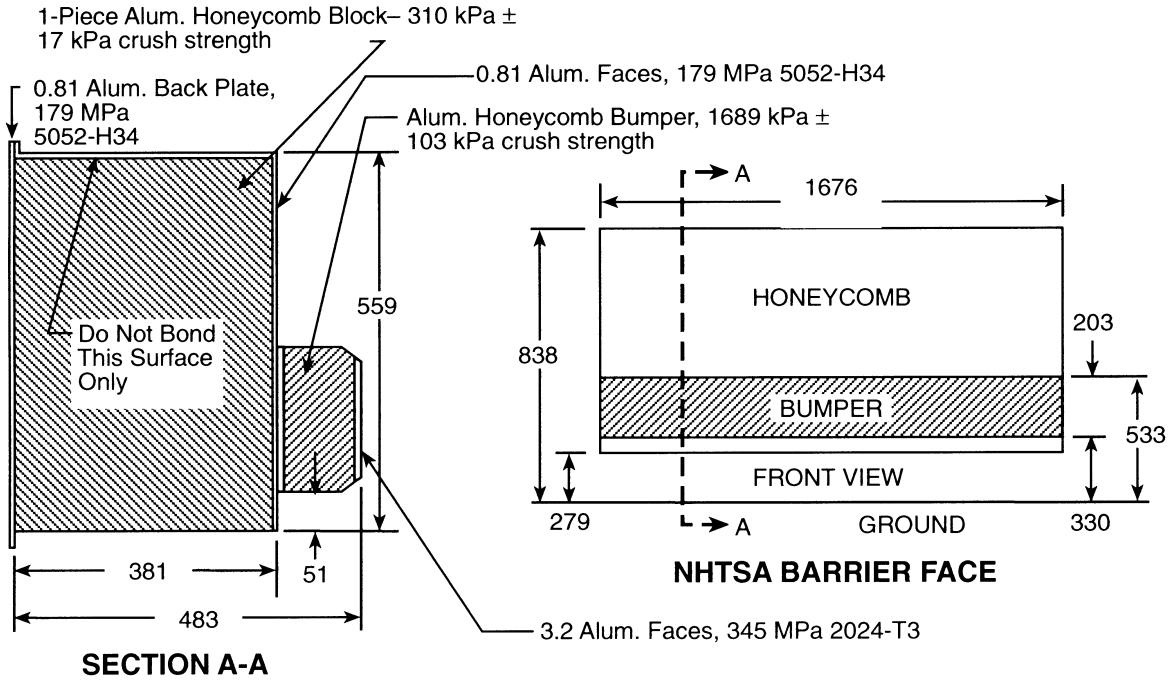

Figure 2—NHTSA SIDE IMPACTOR – MOVING DEFORMABLE BARRIER
All dimensions in millimeters (mm)

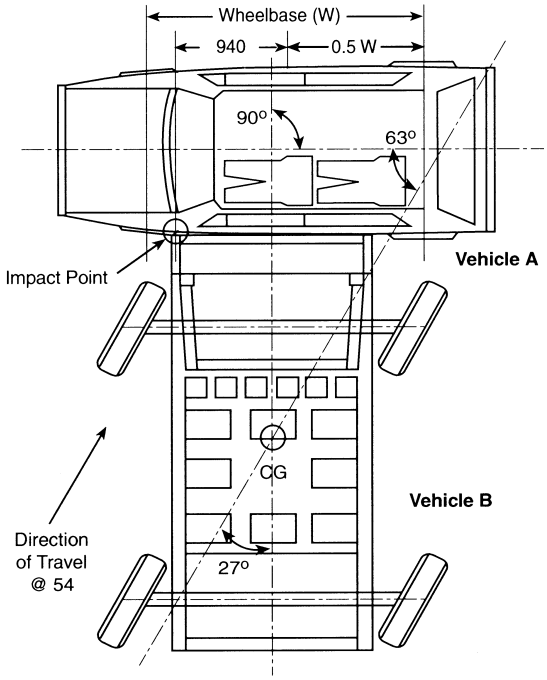

Figure 3—TEST CONFIGURATION
All dimensions in millimeters (mm)
velocity in km/h

BILLING CODE 4910–59–C

S8.11 *Impact reference line.* Place a vertical reference line at the location described below on the side of the vehicle that will be struck by the moving deformable barrier:

S8.11.1 *Passenger cars.*

(a) For vehicles with a wheelbase of 2,896 mm (114 inches) or less, 940 mm (37 inches) forward of the center of the vehicle's wheelbase.

(b) For vehicles with a wheelbase greater than 2,896 mm (114 inches), 508 mm (20 inches) rearward of the centerline of the vehicle's front axle.

S8.11.2 *Multipurpose passenger vehicles, trucks and buses.*

(a) For vehicles with a wheelbase of 2,489 mm (98 inches) or less, 305 mm (12 inches) rearward of the centerline of the vehicle's front axle, except as otherwise specified in paragraph (d) of this section.

(b) For vehicles with a wheelbase of greater than 2,489 mm (98 inches) but not greater than 2,896 mm (114 inches), 940 mm (37 inches) forward of the center of the vehicle's wheelbase, except as otherwise specified in paragraph (d) of this section.

(c) For vehicles with a wheelbase greater than 2,896 mm (114 inches), 508 mm (20 inches) rearward of the centerline of the vehicle's front axle, except as otherwise specified in paragraph (d) of this section.

(d) At the manufacturer's option, for different wheelbase versions of the same model vehicle, the impact reference line may be located by the following:

(1) Select the shortest wheelbase vehicle of the different wheelbase versions of the same model and locate on it the impact reference line at the location described in (a), (b) or (c) of this section, as appropriate;

(2) Measure the distance between the seating reference point (SgRP) and the impact reference line;

(3) Maintain the same distance between the SgRP and the impact reference line for the version being tested as that between the SgRP and the impact reference line for the shortest wheelbase version of the model.

(e) For the compliance test, the impact reference line will be located using the procedure used by the manufacturer as the basis for its certification of compliance with the requirements of this standard. If the manufacturer did not use any of the procedures in this section, or does not specify a procedure when asked by the agency, the agency may locate the impact reference line using either procedure.

S8.12 *Anthropomorphic test dummies.* The anthropomorphic test dummies used to evaluate a vehicle's performance in the moving deformable barrier test conform to the requirements of S11 and are positioned as described in S12 of this standard (49 CFR 571.214).

S9. *Vehicle-to-Pole Requirements.*

S9.1 Except as provided in S5, when tested under the conditions of S10:

S9.1.1 Each vehicle manufactured on or after [date six years after the publication date of the final rule; for illustration purposes, assume that the 6-year date is September 1, 2011] must meet the requirements of S9.2.1, S9.2.2 and S9.2.3, when tested under the conditions specified in S10 into a fixed, rigid pole of 254 mm (10 inches) in diameter, at any speed up to and including 32 km/h (20 mph).

S9.1.2 Except as provided in S9.1.3 of this section, for vehicles manufactured on or after [date four years after the publication date of the final rule; for illustration purposes, assume that the 4-year date is September 1, 2009] to [date that is the August 31 that is six years after the publication date of the final rule; for illustration purposes, August 31, 2011], a percentage of each manufacturer's production, as specified in S13.1.1 and S13.1.2, shall meet the requirements of S9.2.1, S9.2.2 and S9.2.3 when tested under the conditions of S10 into a fixed, rigid pole of 254 mm (10 inches) in diameter, at any velocity up to and including 32 km/h (20 mph). Vehicles manufactured before September 1, 2011

may be certified as meeting the requirements specified in this section.

S9.1.3 The following vehicles are not subject to S9.1.2 of this section (but are subject to S9.1.1):

(a) Vehicles that are manufactured by an original vehicle manufacturer that produces or assembles fewer than 5,000 vehicles annually for sale in the United States;

(b) Vehicles that are altered (within the meaning of 49 CFR 567.7) after having been previously certified in accordance with part 567 of this chapter;

(c) Vehicles that are manufactured in two or more stages; and

(d) Vehicles that are manufactured by a limited line manufacturer.

S9.2 *Requirements.*

S9.2.1 *Dynamic performance requirements using the Part 572 Subpart [to be determined] (ES–2re 50th percentile male) dummy.* Use the ES–2re part 572 subpart [to be determined] dummy, as specified in S11 of this standard (49 CFR 571.214). When using the dummy, the following performance requirements must be met using measurements in accordance with S11.5.

(a) The HIC shall not exceed 1000 when calculated in accordance with the following formula:

$$HIC = \left[\frac{1}{(t_2 - t_1)} \int_{t_1}^{t_2} a dt \right]^{2.5} (t_2 - t_1)$$

Where the term *a* is the resultant head acceleration at the center of gravity of the dummy head expressed as a multiple of *g* (the acceleration of gravity), and t_1 and t_2 are any two points in time during the impact which are separated by not more than a 36 millisecond time interval and where t_1 is less than t_2.

(b) Thorax. The deflection of any of the upper, middle, and lower ribs, shall not exceed 42 mm (1.65 inches).

(c) Resultant lower spine acceleration shall not exceed 82 g.

(d) Force measurements.

(1) The sum of the front, middle and rear abdominal forces, shall not exceed 2.5 kN (562 pounds).

(2) The pubic symphysis force shall not exceed 6.0 kN (1,350 pounds).

S9.2.2 *Dynamic performance requirements using the part 572 subpart [to be determined] (SID–IIsFRG 5th percentile female) dummy.* Use the SID–IIsFRG part 572 subpart [to be determined] dummy, as specified in S11 of this standard (49 CFR 571.214). When using the dummy, the following performance requirements must be met.

(a) The HIC shall not exceed 1000 when calculated in accordance with the following formula:

$$HIC = \left[\frac{1}{(t_2 - t_1)} \int_{t_1}^{t_2} a dt \right]^{2.5} (t_2 - t_1)$$

Where the term *a* is the resultant head acceleration at the center of gravity of the dummy head expressed as a multiple of *g* (the acceleration of gravity), and t_1 and t_2 are any two points in time during the impact which are separated by not more than a 36 millisecond time interval and where t_1 is less than t_2.

(b) Resultant lower spine acceleration must not exceed 82 g.

(c) The sum of the acetabular and iliac pelvic forces must not exceed 5,100 N (1,147 lb).

S9.2.3 *Door opening.*

(a) Any side door that is struck by the pole shall not separate totally from the vehicle.

(b) Any door (including a rear hatchback or tailgate) that is not struck by the pole shall meet the following requirements:

(1) The door shall not disengage from the latched position; and

(2) The latch shall not separate from the striker, and the hinge components shall not separate from each other or from their attachment to the vehicle.

(3) Neither the latch nor the hinge systems of the door shall pull out of their anchorages.

S10. General test conditions for determining compliance with vehicle-to-pole requirements. General test conditions for determining compliance with the vehicle-to-pole test are specified below and in S12 of this standard (49 CFR 571.214).

S10.1 *Test weight.* Each vehicle shall be loaded as specified in S8.1 of this standard (49 CFR 571.214).

S10.2 *Vehicle test attitude.* The vehicle test attitude is determined as specified in S8.2 of this standard (49 CFR 571.214).

S10.3 *Adjustable seats.*

S10.3.1 *Driver and front passenger seat set-up for 50th percentile male dummy.* The driver and front passenger seats are set up as specified in S8.3.1 of this standard, 49 CFR 571.214.

S10.3.2 *Driver and front passenger seat set-up for 5th percentile female dummy.* The driver and front passenger seats are set up as specified in S8.3.2 of this standard, 49 CFR 571.214.

S10.4 Positioning dummies for the vehicle-to-pole test.

(a) 50th percentile male test dummy (ES–2re dummy). The 50th percentile male test dummy shall be positioned in the front outboard seating position on the struck side of the vehicle in accordance with the provisions of S12.2 of this standard, 49 CFR 571.214.

(b) 5th percentile female test dummy (SID–IIsFRG). The 5th percentile female test dummy shall be positioned in the front outboard seating positions on the struck side of the vehicle in accordance with the provisions of S12.3 of this standard, 49 CFR 571.214.

S10.5 *Adjustable steering wheel.* Adjustable steering controls are adjusted so that the steering wheel hub is at the geometric center of the locus it describes when it is moved through its full range of driving positions. If there is no setting detent in the mid-position, lower the steering wheel to the detent just below the mid-position.

S10.6 *Windows and sunroofs.* Movable vehicle windows and vents are placed in the fully closed position on the struck side of the vehicle. Any sunroof shall be placed in the fully closed position.

S10.7 *Convertible tops.* Convertibles and open-body type vehicles have the top, if any, in place in the closed passenger compartment configuration.

S10.8 *Doors.* Doors, including any rear hatchback or tailgate, are fully closed and latched but not locked.

S10.9 *Transmission and brake engagement.* For a vehicle equipped with a manual transmission, the transmission is placed in second gear. For a vehicle equipped with an automatic transmission, the transmission is placed in neutral. For all vehicles, the parking brake is engaged.

S10.10 *Rigid pole.* The rigid pole is a vertical metal structure beginning no more than 102 millimeters (4 inches) above the lowest point of the tires on the striking side of the test vehicle when the vehicle is loaded as specified in S8.1 and extending above the highest point of the roof of the test vehicle. The pole is 254 mm (10 inches) ± 6 mm (0.25 in) in diameter and set off from any mounting surface, such as a barrier or other structure, so that the test vehicle will not contact such a mount or support at any time within 100 milliseconds of the initiation of vehicle to pole contact.

S10.11 *Impact reference line.* The impact reference line is located on the striking side of the vehicle at the intersection of the vehicle exterior and a vertical plane passing through the center of gravity of the head of the dummy seated in accordance with S12 in the front outboard designated seating position. The vertical plane forms an angle of 285 (or 75) degrees with the vehicle's longitudinal centerline for the right (or left) side impact test. The angle

is measured counterclockwise from the vehicle's positive X-axis as defined in S10.13.

S10.12 *Impact configuration.*

S10.12.1 The rigid pole is stationary.

S10.12.2 The test vehicle is propelled sideways so that its line of forward motion forms an angle of 285 (or 75) degrees (±3 degrees) for the right (or left) side impact with the vehicle's longitudinal centerline. The angle is measured counterclockwise from the vehicle's positive X-axis as defined in S10.13. The impact reference line is aligned with the center line of the rigid pole surface, as viewed in the direction of vehicle motion, so that, when the vehicle-to-pole contact occurs, the center line contacts the vehicle area bounded by two vertical planes parallel to and 38 mm (1.5 inches) forward and aft of the impact reference line.

S10.13 *Vehicle reference coordinate system.* The vehicle reference coordinate system is an orthogonal coordinate system consisting of three axes, a longitudinal axis (X), a transverse axis (Y), and a vertical axis (Z). X and Y are in the same horizontal plane and Z passes through the intersection of X and Y. The origin of the system is at the center of gravity of the vehicle. The X-axis is parallel to the longitudinal centerline of the vehicle and is positive to the vehicle front end and negative to the rear end. The Y-axis is positive to the left side of the vehicle and negative to the right side. The Z-axis is positive above the X–Y plane and negative below it.

S11. *Anthropomorphic test dummies.* The anthropomorphic test dummies used to evaluate a vehicle's performance in the moving deformable barrier and vehicle-to-pole tests are specified in 49 CFR part 572. In a test in which the test vehicle is to be struck on its left side, each dummy is to be configured and instrumented to be struck on its left side, in accordance with part 572. In a test in which the test vehicle is to be struck on its right side, each dummy is to be configured and instrumented to be struck on its right side, in accordance with part 572.

S11.1 *Clothing.*

(a) *50th percentile male.* Each test dummy representing a 50th percentile male is clothed in formfitting cotton stretch garments with short sleeves and midcalf length pants. Each foot of the test dummy is equipped with a size 11EEE shoe, which meets the configuration size, sole, and heel thickness specifications of MIL–S–13192 (1976) and weighs 0.68 ± 0.09 kilograms (1.25 ± 0.2 lb).

(b) *5th percentile female.* The test dummy representing a 5th percentile female is clothed in form fitting cotton stretch garments with short sleeves and about the knee length pants. Each foot has on a size 7.5W shoe that meets the configuration and size specifications of MIL–S–2171E or its equivalent.

S11.2 *Limb joints.*

(a) For the 50th percentile male dummy, set the limb joints at between 1 and 2 g. Adjust the leg joints with the torso in the supine position. Adjust the knee and ankle joints so that they just support the lower leg and the foot when extended horizontally (1 to 2 g adjustment).

(b) For the 5th percentile female dummy, set the limb joints at slightly above 1 g, barely restraining the weight of the limb when extended horizontally. The force needed to move a limb segment does not exceed 2 g throughout the range of limb motion. Adjust the leg joints with the torso in the supine position.

S11.3 The stabilized temperature of the test dummy at the time of the test is at any temperature between 20.6 degrees C and 22.2 degrees C.

S11.4 *Acceleration data.* Accelerometers are installed on the head, rib, spine and pelvis components of various dummies as required to meet the injury criteria of the standard. Accelerations measured from different dummy components may use different filters and processing methods.

S11.5 *Processing Data.*

(a) *Subpart F test dummy.*

(1) Process the acceleration data from the accelerometers mounted on the ribs, spine and pelvis of the subpart F dummy with the FIR100 software specified in 49 CFR 572.44(d). Process the data in the following manner:

(i) Filter the data with a 300 Hz, SAE Class 180 filter;

(ii) Subsample the data to a 1600 Hz sampling rate;

(iii) Remove the bias from the subsampled data, and

(iv) Filter the data with the FIR100 software specified in 49 CFR 572.44(d), which has the following characteristics—

(A) Passband frequency 100 Hz.

(B) Stopband frequency 189 Hz.

(C) Stopband gain −50 db.

(D) Passband ripple 0.0225 db.

(2) [Reserved]

(b) *Subpart [to be determined] (ES–2re) test dummy.*

(1) The chest and rib deflection data are filtered at channel frequency class 180 Hz. Abdominal and pubic force data are filtered at channel frequency class of 600 Hz.

(2) The acceleration data from the accelerometers installed inside the skull cavity of the ES–2re test dummy are filtered at channel frequency class of 1000 Hz.

(3) The acceleration data from the accelerometers installed on the lower spine of the ES–2re test dummy are filtered at channel frequency class of 1000 Hz.

(c) *Subpart [to be determined] (SID–2sFRG) test dummy.* (5th percentile female)

(1) The acceleration data from the accelerometers installed inside the skull cavity of the SID IIsFRG test dummy are filtered at channel frequency class of 1000 Hz.

(2) The acceleration data from the accelerometers installed on the lower spine of the SID IIsFRG test dummy are filtered at channel frequency class of 180 Hz.

(3) The iliac and acetabular forces from load cells installed in the pelvis of the SIDIIsFRG are filtered at channel frequency class of 600 Hz.

S12. *Positioning procedures for the anthropomorphic test dummies.*

S12.1 50th percentile male test dummy—49 CFR part 572, subpart F (SID). Position a correctly configured test dummy, conforming to the applicable requirements of part 572, subpart F of this chapter, in the front outboard seating position on the side of the test vehicle to be struck by the moving deformable barrier and, if the vehicle has a second seat, position another conforming test dummy in the second seat outboard position on the same side of the vehicle, as specified in S12.1.3. Each test dummy is restrained using all available belt systems in all seating positions where such belt restraints are provided. Adjustable belt anchorages are placed at the mid-adjustment position. In addition, any folding armrest is retracted. Additional positioning procedures are specified below.

S12.1.1 *Positioning a part 572, subpart F dummy in the driver position.*

(a) *Torso.* Hold the dummy's head in place and push laterally on the non-impacted side of the upper torso in a single stroke with a force of 66.7–89.0 N (15–20 lb) towards the impacted side.

(1) For a bench seat. The upper torso of the test dummy rests against the seat back. The midsagittal plane of the test dummy is vertical and parallel to the vehicle's longitudinal centerline, and passes through the center of the steering wheel.

(2) For a bucket seat. The upper torso of the test dummy rests against the seat back. The midsagittal plane of the test dummy is vertical and parallel to the vehicle's longitudinal centerline, and coincides with the longitudinal centerline of the bucket seat.

(b) *Pelvis.*

(1) H-point. The H-points of each test dummy coincide within 12.7 mm (½ inch) in the vertical dimension and 12.7 mm (½inch) in the horizontal dimension of a point that is located 6.4 mm (¼inch) below the position of the H-point determined by using the equipment for the 50th percentile and procedures specified in SAE J826 (1980) (incorporated by reference; see 49 CFR 571.5), except that Table 1 of SAE J826 is not applicable. The length of the lower leg and thigh segments of the H-point machine are adjusted to 414 and 401 mm (16.3 and 15.8 inches), respectively.

(2) Pelvic angle. As determined using the pelvic angle gauge (GM drawing 78051–532 incorporated by reference in part 572, subpart E of this chapter) which is inserted into the H-point gauging hole of the dummy, the angle of the plane of the surface on the lumbar-pelvic adaptor on which the lumbar spine attaches is 23 to 25 degrees from the horizontal, sloping upward toward the front of the vehicle.

(3) *Legs.* The upper legs of each test dummy rest against the seat cushion to the extent permitted by placement of the feet. The left knee of the dummy is positioned such that the distance from the outer surface of the knee pivot bolt to the dummy's midsagittal plane is 152.4 mm (6.0 inches). To the extent practicable, the left leg of the test dummy is in a vertical longitudinal plane.

(4) *Feet.* The right foot of the test dummy rests on the undepressed accelerator with the heel resting as far forward as possible on the floorpan. The left foot is set perpendicular to the lower leg with the heel resting on the floorpan in the same lateral line as the right heel.

S12.1.2 *Positioning a part 572, subpart F dummy in the front outboard seating position.*

(a) *Torso.* Hold the dummy's head in place and push laterally on the non-impacted side of the upper torso in a single stroke with a force of 66.7–89.0 N (15–20 lb) towards the impacted side.

(1) For a bench seat. The upper torso of the test dummy rests against the seat back. The midsagittal plane of the test dummy is vertical and parallel to the vehicle's longitudinal centerline, and the same distance from the vehicle's longitudinal centerline as would be the midsagittal plane of a test dummy positioned in the driver position under S12.1.1(a)(1).

(2) For a bucket seat. The upper torso of the test dummy rests against the seat back. The midsagittal plane of the test dummy is vertical and parallel to the vehicle's longitudinal centerline, and coincides with the longitudinal centerline of the bucket seat.

(b) *Pelvis.*

(1) H-point. The H-points of each test dummy coincide within 12.7 mm (½ inch) in the vertical dimension and 12.7 mm (½ inch) in the horizontal dimension of a point that is located 6.4 mm (¼inch) below the position of the H-point determined by using the equipment for the 50th percentile and procedures specified in SAE J826 (1980) (incorporated by reference; see 49 CFR 571.5), except that Table 1 of SAE J826 is not applicable. The length of the lower leg and thigh segments of the H-point machine are adjusted to 414 and 409 mm (16.3 and 15.8 inches), respectively.

(2) Pelvic angle. As determined using the pelvic angle gauge (GM drawing 78051–532 incorporated by reference in part 572, subpart E of this chapter) which is inserted into the H-point gauging hole of the dummy, the angle of the plane of the surface on the lumbar-pelvic adaptor on which the lumbar spine attaches is 23 to 25 degrees from the horizontal, sloping upward toward the front of the vehicle.

(c) *Legs.* The upper legs of each test dummy rest against the seat cushion to the extent permitted by placement of the feet. The initial distance between the outboard knee clevis flange surfaces is 292 mm (11.5 inches). To the extent practicable, both legs of the test dummies in outboard passenger positions are in vertical longitudinal planes. Final adjustment to accommodate placement of feet in accordance with S12.1.2(d) for various passenger compartment configurations is permitted.

(d) *Feet.* The feet of the test dummy are placed on the vehicle's toeboard with the heels resting on the floorpan as close as possible to the intersection of the toeboard and floorpan. If the feet cannot be placed flat on the toeboard, they are set perpendicular to the lower legs and placed as far forward as possible so that the heels rest on the floorpan.

S12.1.3 *Positioning a part 572, subpart F dummy in the rear outboard seating positions.*

(a) *Torso.* Hold the dummy's head in place and push laterally on the non-impacted side of the upper torso in a single stroke with a force of 66.7–89.0 N (15–20 lb) towards the impacted side.

(1) For a bench seat. The upper torso of the test dummy rests against the seat back. The midsagittal plane of the test dummy is vertical and parallel to the vehicle's longitudinal centerline, and, if possible, the same distance from the vehicle's longitudinal centerline as the midsagittal plane of a test dummy positioned in the driver position under S12.1.1(a)(1). If it is not possible to position the test dummy so that its midsagittal plane is parallel to the vehicle longitudinal centerline and is at this distance from the vehicle's longitudinal centerline, the test dummy is positioned so that some portion of the test dummy just touches, at or above the seat level, the side surface of the vehicle, such as the upper quarter panel, an armrest, or any interior trim (*i.e.,* either the broad trim panel surface or a smaller, localized trim feature).

(2) For a bucket or contoured seat. The upper torso of the test dummy rests against the seat back. The midsagittal plane of the test dummy is vertical and parallel to the vehicle's longitudinal centerline, and coincides with the longitudinal centerline of the bucket or contoured seat.

(b) *Pelvis.*

(1) H-point. The H-points of each test dummy coincide within 12.7 mm (½ inch) in the vertical dimension and 12.7 mm (½ inch) in the horizontal dimension of a point that is located 6.4 mm (¼ inch) below the position of the H-point determined by using the equipment for the 50th percentile and procedures specified in SAE J826 (1980) (incorporated by reference; see 49 CFR 571.5), except that Table 1 of SAE J826 is not applicable. The length of the lower leg and thigh segments of the H-point machine are adjusted to 414 and 401 mm (16.3 and 15.8 inches), respectively.

(2) Pelvic angle. As determined using the pelvic angle gauge (GM drawing 78051–532 incorporated by reference in part 572, subpart E of this chapter) which is inserted into the H-point gauging hole of the dummy, the angle of the plane of the surface on the lumbar-pelvic adaptor on which the lumbar spine attaches is 23 to 25 degrees from the horizontal, sloping upward toward the front of the vehicle.

(c) *Legs.* Rest the upper legs of each test dummy against the seat cushion to the extent permitted by placement of the feet. The initial distance between the outboard knee clevis flange surfaces is 292 mm (11.5 inches). To the extent practicable, both legs of the test dummies in outboard passenger positions are in vertical longitudinal planes. Final adjustment to accommodate placement of feet in accordance with S12.1.3(d) for various passenger compartment configurations is permitted.

(d) *Feet.* Place the feet of the test dummy flat on the floorpan and beneath the front seat as far as possible without

front seat interference. If necessary, the distance between the knees may be changed in order to place the feet beneath the seat.

S12.2 *50th percentile male test dummy—49 CFR part 572, subpart [to be determined] (ES 2re).*

S12.2.1 *Positioning an ES–2re dummy in all seating positions.* Position a correctly configured ES–2re test dummy, conforming to the applicable requirements of part 572 of this chapter, in the front outboard seating position on the side of the test vehicle to be struck by the moving deformable barrier or pole and, for the moving deformable barrier test, if the vehicle has a second seat, position another conforming test dummy in the second seat outboard position on the same side of the vehicle. Restrain each test dummy using all available belt systems in all seating positions where such belt restraints are provided. Place adjustable belt anchorages at the mid-adjustment position. Retract any folding armrest.

(a) *Upper torso.*

(1) The plane of symmetry of the dummy coincides with the vertical median plane of the specified seating position.

(2) Bend the upper torso forward and then lay it back against the seat back. Set the shoulders of the dummy fully rearward.

(b) *Pelvis.* Position the pelvis of the dummy according to the following:

(1) Position the pelvis of the dummy such that a lateral line passing through the dummy H-points is perpendicular to the longitudinal center plane of the seat. The line through the dummy H-points is horizontal with a maximum inclination of ±2 degrees. The dummy may be equipped with tilt sensors in the thorax and the pelvis. These instruments can help to obtain the desired position.

(2) The correct position of the dummy pelvis may be checked relative to the H-point of the H-point Manikin by using the M3 holes in the H-point back plates at each side of the ES–2re pelvis. The M3 holes are indicated with ''Hm''. The ''Hm'' position should be in a circle with a radius of 10 mm (0.39 inches) round the H-point of the H-point Manikin.

(c) *Arms.* For the driver seating position, place the dummy's upper arms such that the angle between the projection of the arm centerline on the mid-sagittal plane of the dummy and the torso reference line is 40° ± 5°. The torso reference line is defined as the thoracic spine centerline. The shoulder-arm joint allows for discrete arm positions at 0, 40, and 90 degree settings forward of the spine. For other seating positions, place the upper arms at the 0° ± 5° setting in the shoulder-arm joint.

(d) *Legs and Feet.* Position the legs and feet of the dummy according to the following:

(1) For the driver's seating position, without inducing pelvis or torso movement, place the right foot of the dummy on the un-pressed accelerator pedal with the heel resting as far forward as possible on the floor pan. Set the left foot perpendicular to the lower leg with the heel resting on the floor pan in the same lateral line as the right heel. Set the knees of the dummy such that their outside surfaces are 150 ± 10 mm (5.9 ± 0.4 inches) from the plane of symmetry of the dummy. If possible within these constraints, place the thighs of the dummy in contact with the seat cushion.

(2) For other seating positions, without inducing pelvis or torso movement, place the heels of the dummy as far forward as possible on the floor pan without compressing the seat cushion more than the compression due to the weight of the leg. Set the knees of the dummy such that their outside surfaces are 150 ± 10 mm (5.9 ± 0.4 inches) from the plane of symmetry of the dummy.

S12.3 *5th percentile female test dummy—49 CFR part 572, subpart [to be determined] (SID IIsFRG).* Position a correctly configured 5th percentile female part 572 subpart [to be determined] (SID IIsFRG) test dummy, conforming to the applicable requirements of part 572 of this chapter, in the front outboard seating position on the side of the test vehicle to be struck by the moving deformable barrier or pole and, for the moving deformable barrier, if the vehicle has a second seat, position another conforming test dummy in the second seat outboard position on the same side of the vehicle as specified in S12.3.4. Retract any folding armrest. Additional procedures are specified below.

S12.3.1 *General provisions and definitions.*

(a) Measure all angles with respect to the horizontal plane unless otherwise stated.

(b) Adjust the SID–IIsFRG dummy's neck bracket to align the zero degree index marks.

(c) Other seat adjustments. The longitudinal centerline of a bucket seat cushion passes through the SgRP and is parallel to the longitudinal centerline of the vehicle.

(d) *Driver and passenger manual belt adjustment.* Use all available belt systems. Place adjustable belt anchorages at the nominal position for a 5th percentile adult female suggested by the vehicle manufacturer.

(e) *Definitions.*

(1) The term ''midsagittal plane'' refers to the vertical plane that separates the dummy into equal left and right halves.

(2) The term ''vertical longitudinal plane'' refers to a vertical plane parallel to the vehicle's longitudinal centerline.

(3) The term ''vertical plane'' refers to a vertical plane, not necessarily parallel to the vehicle's longitudinal centerline.

(4) The term ''transverse instrumentation platform'' refers to the transverse instrumentation surface inside the dummy's skull casting to which the neck load cell mounts. This surface is perpendicular to the skull cap's machined inferior-superior mounting surface.

(5) The term ''thigh'' refers to the femur between, but not including, the knee and the pelvis.

(6) The term ''leg'' refers to the lower part of the entire leg including the knee.

(7) The term ''foot'' refers to the foot, including the ankle.

(8) For leg and thigh angles, use the following references:

(i) Thigh—a straight line on the thigh skin between the center of the ½–13 UNC–2B tapped hole in the upper leg femur clamp and the knee pivot shoulder bolt.

(ii) Leg—a straight line on the leg skin between the center of the ankle shell and the knee pivot shoulder bolt.

(9) The term ''seat cushion reference point'' (SCRP) means a point placed on the outboard side of the seat cushion at a horizontal distance between 150 mm (5.9 in) and 250 mm (9.8 in) from the front edge of the seat used as a guide in positioning the seat.

(10) The term ''seat cushion reference line'' means a line on the side of the seat cushion, passing through the seat cushion reference point, whose projection in the vehicle vertical longitudinal plane is straight and has a known angle with respect to the horizontal.

S12.3.2 *5th percentile female driver dummy positioning.*

(a) *Driver torso/head/seat back angle positioning.*

(1) With the seat in the position determined in S8.3.2, use only the control that moves the seat fore and aft to place the seat in the rearmost position. If the seat cushion reference line angle automatically changes as the seat is moved from the full forward position, maintain, as closely as possible, the seat cushion reference line angle determined in S8.3.2.3.3, for the final forward position when measuring the pelvic angle as specified in

S12.3.3(a)(11). The seat cushion reference angle position may be achieved through the use of any seat or seat cushion adjustments other than that which primarily moves the seat or seat cushion fore-aft.

(2) Fully recline the seat back, if adjustable. Install the dummy into the driver's seat, such that when the legs are positioned 120 degrees to the thighs, the calves of the legs are not touching the seat cushion.

(3) Bucket seats. Center the dummy on the seat cushion so that its midsagittal plane is vertical and passes within ± 10 mm (± 0.4 in) of the SgRP.

(4) Bench seats. Position the midsagittal plane of the dummy vertical and parallel to the vehicle's longitudinal centerline and aligned within ± 10 mm (± 0.4 in) of the center of the steering wheel rim.

(5) Hold the dummy's thighs down and push rearward on the upper torso to maximize the dummy's pelvic angle.

(6) Place the legs at 120 degrees to the thighs. Set the initial transverse distance between the longitudinal centerlines at the front of the dummy's knees at 160 to 170 mm (6.3 to 6.7 in), with the thighs and legs of the dummy in vertical planes. Push rearward on the dummy's knees to force the pelvis into the seat so there is no gap between the pelvis and the seat back or until contact occurs between the back of the dummy's calves and the front of the seat cushion.

(7) Gently rock the upper torso relative to the lower torso laterally in a side to side motion three times through a ± 5 degree arc (approximately 51 mm (2 in) side to side).

(8) If needed, extend the legs slightly so that the feet are not in contact with the floor pan. Let the thighs rest on the seat cushion to the extent permitted by the foot movement. Keeping the leg and the thigh in a vertical plane, place the foot in the vertical longitudinal plane that passes through the centerline of the accelerator pedal. Rotate the left thigh outboard about the hip until the center of the knee is the same distance from the midsagittal plane of the dummy as the right knee ± 5 mm (± 0.2 in). Using only the control that moves the seat fore and aft, attempt to return the seat to the full forward position. If either of the dummy's legs first contacts the steering wheel, then adjust the steering wheel, if adjustable, upward until contact with the steering wheel is avoided. If the steering wheel is not adjustable, separate the knees enough to avoid steering wheel contact. Proceed with moving the seat forward until either the leg contacts the vehicle interior or the seat reaches the full forward position. (The right foot may contact and depress the accelerator and/or change the angle of the foot with respect to the leg during seat movement.) If necessary to avoid contact with the vehicle's brake or clutch pedal, rotate the test dummy's left foot about the leg. If there is still interference, rotate the left thigh outboard about the hip the minimum distance necessary to avoid pedal interference. If a dummy leg contacts the vehicle interior before the full forward position is attained, position the seat at the next detent where there is no contact. If the seat is a power seat, move the seat fore and aft to avoid contact while assuring that there is a maximum of 5 mm (0.2 in) distance between the vehicle interior and the point on the dummy that would first contact the vehicle interior. If the steering wheel was moved, return it to the position described in S10.5. If the steering wheel contacts the dummy's leg(s) prior to attaining this position, adjust it to the next higher detent, or if infinitely adjustable, until there is 5 mm (0.2 in) clearance between the wheel and the dummy's leg(s).

(9) For vehicles without adjustable seat backs, adjust the lower neck bracket to level the head as much as possible. For vehicles with adjustable seat backs, while holding the thighs in place, rotate the seat back forward until the transverse instrumentation platform of the head is level to within ± 0.5 degree, making sure that the pelvis does not interfere with the seat bight. Inspect the abdomen to ensure that it is properly installed. If the torso contacts the steering wheel, adjust the steering wheel in the following order until there is no contact: telescoping adjustment, lowering adjustment, raising adjustment. If the vehicle has no adjustments or contact with the steering wheel cannot be eliminated by adjustment, position the seat at the next detent where there is no contact with the steering wheel as adjusted in S10.5. If the seat is a power seat, position the seat to avoid contact while assuring that there is a maximum of 5 mm (0.2 in) distance between the steering wheel as adjusted in S10.5 and the point of contact on the dummy.

(10) If it is not possible to achieve the head level within ±0.5 degrees, minimize the angle.

(11) Measure and set the dummy's pelvic angle using the pelvic angle gage. The angle shall be set to 20.0 degrees ±2.5 degrees. If this is not possible, adjust the pelvic angle as close to 20.0 degrees as possible while keeping the transverse instrumentation platform of the head as level as possible by adjustments specified in S12.3.2(a)(9) and (10).

(12) If the dummy is contacting the vehicle interior after these adjustments, move the seat rearward until there is a maximum of 5 mm (0.2 in) between the contact point of the dummy and the interior of the vehicle or if it has a manual seat adjustment, to the next rearward detent position. If after these adjustments, the dummy contact point is more than 5 mm (0.2 in) from the vehicle interior and the seat is still not in its forwardmost position, move the seat forward until the contact point is 5 mm (0.2 in) or less from the vehicle interior, or if it has a manual seat adjustment, move the seat to the closest detent position without making contact, or until the seat reaches its forwardmost position, whichever occurs first.

(b) *Driver foot positioning.*

(1) If the vehicle has an adjustable accelerator pedal, adjust it to the full forward position. If the heel of the right foot can contact the floor pan, follow the positioning procedure in S12.3.2(b)(1)(i). If not, follow the positioning procedure in S12.3.2(b)(1)(ii).

(i) Rest the right foot of the test dummy on the un-depressed accelerator pedal with the rearmost point of the heel on the floor pan in the plane of the pedal. If the foot cannot be placed on the accelerator pedal, set it initially perpendicular to the leg and then place it as far forward as possible in the direction of the pedal centerline with the rearmost point of the heel resting on the floor pan. If the vehicle has an adjustable accelerator pedal and the right foot is not touching the accelerator pedal when positioned as above, move the pedal rearward until it touches the right foot. If the accelerator pedal in the full rearward position still does not touch the foot, leave the pedal in that position.

(ii) Extend the foot and lower leg by decreasing the knee flexion angle until any part of the foot contacts the un-depressed accelerator pedal or the highest part of the foot is at the same height as the highest part of the pedal. If the vehicle has an adjustable accelerator pedal and the right foot is not touching the accelerator pedal when positioned as above, move the pedal rearward until it touches the right foot.

(2) If the ball of the foot does not contact the pedal, increase the ankle plantar flexion angle such that the toe of the foot contacts or is as close as possible to contact with the un-depressed accelerator pedal.

(3) If, in its final position, the heel is off of the vehicle floor, a spacer block must be used under the heel to support the final foot position. The surface of the block in contact with the heel has

an inclination of 30 degrees, measured from the horizontal, with the highest surface towards the rear of the vehicle.

(4) Place the left foot on the toe-board with the rearmost point of the heel resting on the floor pan as close as possible to the point of intersection of the planes described by the toe-board and floor pan, and not on or in contact with the vehicle's brake pedal, clutch pedal, wheel-well projection or foot rest, except as provided in S12.3.2(b)(6).

(5) If the left foot cannot be positioned on the toe board, place the foot perpendicular to the lower leg centerline as far forward as possible with the heel resting on the floor pan.

(6) If the left foot does not contact the floor pan, place the foot parallel to the floor and place the leg perpendicular to the thigh as possible. If necessary to avoid contact with the vehicle's brake pedal, clutch pedal, wheel-well, or foot rest, use the three foot position adjustments listed in S12.3.2(b)(1)(i)–(iii). The adjustment options are listed in priority order, with each subsequent option incorporating the previous. In making each adjustment, move the foot the minimum distance necessary to avoid contact. If it is not possible to avoid all prohibited foot contact, priority is given to avoiding brake or clutch pedal contact:

(i) Rotate (abduction/adduction) the test dummy's left foot about the lower leg;

(ii) Planar flex the foot;

(iii) Rotate the left leg outboard about the hip.

(c) *Driver arm/hand positioning.*

(1) Place the dummy's upper arm such that the angle between the projection of the arm centerline on the midsagittal plane of the dummy and the torso reference line is 40° ± 5°. The torso reference line is defined as the thoracic spine centerline. The shoulder-arm joint allows for discrete arm positions at 0, ±40, ± 90, ± 140, and 180 degree settings where positive is forward of the spine.

(2) [Reserved]

S12.3.3 *5th percentile female front passenger dummy positioning.*

(a) *Passenger torso/head/seat back angle positioning.*

(1) With the seat at the mid-height in the full-forward position determined in S8.3.2, use only the control that primarily moves the seat fore and aft to place the seat in the rearmost position, without adjusting independent height controls. If the seat cushion reference angle automatically changes as the seat is moved from the full forward position, maintain, as closely as possible, the seat cushion reference line angle determined in S8.3.2.3.3, for the final forward position when measuring the pelvic angle as specified in S12.3.3(a)(11). The seat cushion reference line angle position may be achieved through the use of any seat or seat cushion adjustments other than that which primarily moves the seat or seat cushion fore-aft.

(2) Fully recline the seat back, if adjustable. Place the dummy into the passenger's seat, such that when the legs are positioned 120 degrees to the thighs, the calves of the legs are not touching the seat cushion.

(3) Bucket seats. Place the dummy on the seat cushion so that its midsagittal plane is vertical and passes through the SgRP within + 10 mm (± 0.4 in).

(4) Bench seats. Position the midsagittal plane of the dummy vertical and parallel to the vehicle's longitudinal centerline and the same distance from the vehicle's longitudinal centerline, within + 10 mm (± 0.4 in), as the midsagittal plane of the driver dummy.

(5) Hold the dummy's thighs down and push rearward on the upper torso to maximize the dummy's pelvic angle.

(6) Place the legs at 120 degrees to the thighs. Set the initial transverse distance between the longitudinal centerlines at the front of the dummy's knees at 160 to 170 mm (6.3 to 6.7 in), with the thighs and legs of the dummy in vertical planes. Push rearward on the dummy's knees to force the pelvis into the seat so there is no gap between the pelvis and the seat back or until contact occurs between the back of the dummy's calves and the front of the seat cushion.

(7) Gently rock the upper torso relative to the lower torso laterally in a side to side motion three times through a ± 5 degree arc (approximately 51 mm (2 in) side to side).

(8) If needed, extend the legs slightly so that the feet are not in contact with the floor pan. Let the thighs rest on the seat cushion to the extent permitted by the foot movement. With the feet perpendicular to the legs, place the heels on the floor pan. If a heel will not contact the floor pan, place it as close to the floor pan as possible. Using only the control that primarily moves the seat fore and aft, attempt to return the seat to the full forward position. If a dummy leg contacts the vehicle interior before the full forward position is attained, position the seat at the next detent where there is no contact. If the seats are power seats, position the seat to avoid contact while assuring that there is a maximum of 5 mm (0.2 in) distance between the vehicle interior and the point on the dummy that would first contact the vehicle interior.

(9) For vehicles without adjustable seat backs, adjust the lower neck bracket to level the head as much as possible. For vehicles with adjustable seat backs, while holding the thighs in place, rotate the seat back forward until the transverse instrumentation platform of the head is level to within ± 0.5 degree, making sure that the pelvis does not interfere with the seat bight. Inspect the abdomen to ensure that it is properly installed.

(10) If it is not possible to achieve the head level within ± 0.5 degrees, minimize the angle.

(11) Measure and set the dummy's pelvic angle using the pelvic angle gage. The angle shall be set to 20.0 degrees ± 2.5 degrees. If this is not possible, adjust the pelvic angle as close to 20.0 degrees as possible while keeping the transverse instrumentation platform of the head as level as possible by adjustments specified in S12.3.3(a)(9) and (10).

(12) If the dummy is contacting the vehicle interior after these adjustments, move the seat rearward until there is a maximum of 5 mm (0.2 in) between the contact point of the dummy and the interior of the vehicle or if it has a manual seat adjustment, to the next rearward detent position. If after these adjustments, the dummy contact point is more than 5 mm (0.2 in) from the vehicle interior and the seat is still not in its forwardmost position, move the seat forward until the contact point is 5 mm (0.2 in) or less from the vehicle interior, or if it has a manual seat adjustment, move the seat to the closest detent position without making contact, or until the seat reaches its forwardmost position, whichever occurs first.

(b) *Passenger foot positioning.*

(1) Place the front passenger's feet flat on the toe board.

(2) If the feet cannot be placed flat on the toe board, set them perpendicular to the leg center lines and place them as far forward as possible with the heels resting on the floor pan.

(3) Place the rear seat passenger's feet flat on the floor pan and beneath the front seat as far as possible without front seat interference.

(c) *Passenger arm/hand positioning.* Place the dummy's upper arm such that the angle between the projection of the arm centerline on the mid-sagittal plane of the dummy and the torso reference line is 0° ± 5°. The torso reference line is defined as the thoracic spine centerline. The shoulder-arm joint allows for discrete arm positions at 0, ± 40, ± 90, ± 140, and 180 degree settings where positive is forward of the spine.

S12.3.4 *5th percentile female in rear outboard seating positions.*

(a) Set the seat at the full rearward, full down position determined in S8.3.3.

(b) Fully recline the seat back, if adjustable. Install the dummy into the passenger seat, such that when the legs are 120 degrees to the thighs, the calves of the legs are not touching the seat cushion.

(c) Place the dummy on the seat cushion so that its midsagittal plane is vertical and coincides with the vertical longitudinal plane through the center of the seating position SgRP within ±10 mm (± 0.4 mm).

(d) Hold the dummy's thighs down and push rearward on the upper torso to maximize the dummy's pelvic angle.

(e) Place the legs at 120 degrees to the thighs. Set the initial transverse distance between the longitudinal centerlines at the front of the dummy's knees at 160 to 170 mm (6.3 to 6.7 in), with the thighs and legs of the dummy in vertical planes. Push rearward on the dummy's knees to force the pelvis into the seat so there is no gap between the pelvis and the seat back or until contact occurs between the back of the dummy's calves and the front of the seat cushion.

(f) Gently rock the upper torso laterally side to side three times through a ± 5 degree arc (approximately 51 mm (2 in) side to side).

(g) If needed, extend the legs slightly so that the feet are not in contact with the floor pan. Let the thighs rest on the seat cushion to the extent permitted by the foot movement. With the feet perpendicular to the legs, place the heels on the floor pan. If a heel will not contact the floor pan, place it as close to the floor pan as possible.

(h) For vehicles without adjustable seat backs, adjust the lower neck bracket to level the head as much as possible. For vehicles with adjustable seat backs, while holding the thighs in place, rotate the seat back forward until the transverse instrumentation platform of the head is level to within ± 0.5 degrees, making sure that the pelvis does not interfere with the seat bight. Inspect the abdomen to insure that it is properly installed.

(i) If it is not possible to orient the head level within ± 0.5 degrees, minimize the angle.

(j) Measure and set the dummy's pelvic angle using the pelvic angle gauge. The angle shall be set to 20.0 degrees ± 2.5 degrees. If this is not possible, adjust the pelvic angle as close to 20.0 degrees as possible while keeping the transverse instrumentation platform of the head as level as possible, as specified in S12.3.4(h) and (i).

(k) Passenger foot positioning.

(1) Place the passenger's feet flat on the floor pan.

(2) If the either foot does not contact the floor pan, place the foot parallel to the floor and place the leg as perpendicular to the thigh as possible

(l) *Passenger arm/hand positioning.* Place the dummy's upper arm such that the angle between the projection of the arm centerline on the midsagittal plane of the dummy and the torso reference line is 0° ± 5°. The torso reference line is defined as the thoracic spine centerline. The shoulder-arm joint allows for discrete arm positions at 0, ± 40, ± 90, ± 140, and 180 degree settings where positive is forward of the spine.

S13 *Phase-in of vehicle-to-pole test and performance requirements for vehicles manufactured on or after September 1, 2009 and before September 1, 2011.*

S13.1 *Vehicles manufactured on or after September 1, 2009 and before September 1, 2011.* At anytime during the production years ending August 31 of each year, each manufacturer shall, upon request from the Office of Vehicle Safety Compliance, provide information identifying the vehicles (by make, model and vehicle identification number) that have been certified as complying with the vehicle-to-pole test requirements (S9.2) of this standard. The manufacturer's designation of a vehicle as a certified vehicle is irrevocable.

S13.1.1 *Vehicles manufactured on or after September 1, 2009 and before September 1, 2010.* Subject to S13.4, for vehicles manufactured on or after September 1, 2009 and before September 1, 2010, the number of vehicles complying with S9.2 shall be not less than 20 percent of:

(a) The manufacturer's average annual production of vehicles manufactured in the three previous production years; or

(b) The manufacturer's production in the current production year.

S13.1.2 *Vehicles manufactured on or after September 1, 2010 and before September 1, 2011.* Subject to S13.4, for vehicles manufactured on or after September 1, 2010 and before September 1, 2011, the number of vehicles complying with S9.2 shall be not less than 50 percent of:

(a) The manufacturer's average annual production of vehicles manufactured in the three previous production years; or

(b) The manufacturer's production in the current production year.

S13.2 *Vehicles produced by more than one manufacturer.*

S13.2.1 For the purpose of calculating average annual production of vehicles for each manufacturer and the number of vehicles manufactured by each manufacturer under S13.1.1 and S13.1.2, a vehicle produced by more than one manufacturer shall be attributed to a single manufacturer as follows, subject to S13.2.2.

(a) A vehicle that is imported shall be attributed to the importer.

(b) A vehicle manufactured in the United States by more than one manufacturer, one of which also markets the vehicle, shall be attributed to the manufacturer that markets the vehicle.

S13.2.2 A vehicle produced by more than one manufacturer shall be attributed to any one of the vehicle's manufacturers specified by an express written contract, reported to the National Highway Traffic Safety Administration under 49 CFR part 598, between the manufacturer so specified and the manufacturer to which the vehicle would otherwise be attributed under S13.2.1.

S13.3 For the purposes of calculating average annual production of vehicles for each manufacturer and the number of vehicles manufactured by each manufacturer under S13.1.1 and S13.1.2, each vehicle that is excluded by S5(c) from the vehicle-to-pole test requirements is not counted.

S13.4 Calculation of complying vehicles.

(a) For the purposes of complying with S13.1.1, a manufacturer may count a vehicle if it is manufactured on or after [date that is 30 days after publication of a final rule], but before September 1, 2010.

(b) For purposes of complying with S13.1.2, a manufacturer may count a vehicle if it—

(1) Is manufactured on or after [date that is 30 days after publication of a final rule], but before September 1, 2011 and,

(2) Is not counted toward compliance with S13.1.1.

3. Part 598 would be added to read as follows:

PART 598—SIDE IMPACT PHASE-IN REPORTING REQUIREMENTS

Sec.

598.1 Scope.
598.2 Purpose.
598.3 Applicability.
598.4 Definitions.
598.5 Response to inquiries.
598.6 Reporting requirements.
598.7 Records.
598.8 Petition to extend period to file report.

Authority: 49 U.S.C. 322, 30111, 30115, 30117 and 30166; delegation of authority at 49 CFR 1.50.

§ 598.1 Scope.

This part establishes requirements for manufacturers of passenger cars, and of trucks, buses and multipurpose

passenger vehicles with a gross vehicle weight rating (GVWR) of 4,536 kilograms (kg) (10,000 pounds) or less, to submit a report, and maintain records related to the report, concerning the number of such vehicles that meet the vehicle-to-pole test requirements of S9 of Standard No. 214, *Side impact protection* (49 CFR 571.214).

§ 598.2 Purpose.

The purpose of these reporting requirements is to assist the National Highway Traffic Safety Administration in determining whether a manufacturer has complied with the requirements of Standard No. 214, Side Impact Protection (49 CFR 571.214).

§ 598.3 Applicability.

This part applies to manufacturers of passenger cars, and of trucks, buses and multipurpose passenger vehicles with a GVWR of 4,536 kg (10,000 lb) or less. However, this part does not apply to vehicles excluded by S2 and S5 of Standard No. 214 (49 CFR 571.214) from the requirements of that standard.

§ 598.4 Definitions.

(a) All terms defined in 49 U.S.C. 30102 are used in their statutory meaning.

(b) Bus, gross vehicle weight rating or GVWR, multipurpose passenger vehicle, passenger car, and truck are used as defined in § 571.3 of this chapter.

(c) Production year means the 12-month period between September 1 of one year and August 31 of the following year, inclusive.

(d) Limited line manufacturer means a manufacturer that sells three or fewer carlines, as that term is defined in 49 CFR 583.4, in the United States during a production year.

§ 598.5 Response to inquiries.

At anytime during the production years ending August 31, 2010, August 31, 2011, and August 31, 2012, each manufacturer shall, upon request from the Office of Vehicle Safety Compliance, provide information identifying the vehicles (by make, model and vehicle identification number) that have been certified as complying with the vehicle-to-pole test of FMVSS No. 214 (49 CFR 571.214).

§ 598.6 Reporting requirements.

(a) *Advanced credit phase-in reporting requirements.* (1) Within 60 days after the end of the production years ending August 31, 2006, August 31, 2007, August 31, 2008, and August 31, 2009, each manufacturer choosing to certify vehicles manufactured during any of those production years as complying with the vehicle-to-pole requirements of S9 of Standard No. 214 (49 CFR 571.214) shall submit a report to the National Highway Traffic Safety Administration as specified in paragraph (a)(2) of this section.

(2) Each report shall—

(i) Identify the manufacturer;

(ii) State the full name, title, and address of the official responsible for preparing the report;

(iii) Identify the production year being reported on;

(iv) Provide the information specified in paragraph (c) of this section;

(v) Be written in the English language; and

(vi) Be submitted to: Administrator, National Highway Traffic Safety Administration, 400 Seventh Street, SW., Washington, DC 20590.

(b) *Phase-in reporting requirements.* Within 60 days after the end of each of the production years ending August 31, 2010 and August 31, 2011, each manufacturer shall submit a report to the National Highway Traffic Safety Administration concerning its compliance with the vehicle-to-pole requirements of S9 of Standard No. 214 for its vehicles produced in that year. Each report shall—

(1) Identify the manufacturer;

(2) State the full name, title, and address of the official responsible for preparing the report;

(3) Identify the production year being reported on;

(4) Contain a statement regarding whether or not the manufacturer complied with the vehicle-to-pole requirements of S9 of Standard No. 214 for the period covered by the report and the basis for that statement;

(5) Provide the information specified in paragraph (d) of this section, except that this information need not be submitted with the report due 60 days after August 31, 2010 if the manufacturer chooses the compliance option specified in S9.1.3 of 49 CFR 571.214;

(6) Specify the number of advance credit vehicles, if any, that are being applied to the production year being reported on;

(7) Be written in the English language; and

(8) Be submitted to: Administrator, National Highway Traffic Safety Administration, 400 Seventh Street, SW., Washington, DC 20590.

(c) *Advanced credit phase-in report content*—(1) *Production of complying vehicles.* With respect to the reports identified in § 598.6(a), each manufacturer shall report for the production year for which the report is filed the number of vehicles, by make and model year, that are certified as meeting the vehicle-to-pole requirements of S9 of Standard No. 214.

(2) *Vehicles produced by more than one manufacturer.* Each manufacturer whose reporting of information is affected by one or more of the express written contracts permitted by S13.2.2 of Standard No. 214 shall:

(i) Report the existence of each contract, including the names of all parties to the contract and explain how the contract affects the report being submitted.

(ii) Report the number of vehicles covered by each contract in each production year.

(d) *Phase-in report content*—(1) *Basis for phase-in production goals.* Each manufacturer shall provide the number of passenger cars manufactured for sale in the United States for each of the three previous production years, or, at the manufacturer's option, for the current production year. A new manufacturer that is, for the first time, manufacturing passenger cars for sale in the United States must report the number of passenger cars manufactured during the current production year.

(2) *Production of complying vehicles.* Each manufacturer shall report for the production year being reported on, and each preceding production year, to the extent that vehicles produced during the preceding years are treated under Standard No. 214 as having been produced during the production year being reported on, information on the number of passenger vehicles that meet the vehicle-to-pole performance requirements of Standard No. 214.

(3) *Vehicles produced by more than one manufacturer.* Each manufacturer whose reporting of information is affected by one or more of the express written contracts permitted by S13.2.2 of Standard No. 214 shall:

(i) Report the existence of each contract, including the names of all parties to the contract, and explain how the contract affects the report being submitted.

(ii) Report the actual number of vehicles covered by each contract.

§ 598.7 Records.

Each manufacturer shall maintain records of the Vehicle Identification Number for each vehicle for which information is reported under § 598.6(c)(1) and § 598.6(d)(2) until December 31, 2011.

§ 598.8 Petition to extend period to file report.

A petition for extension of the time to submit a report must be received not later than 15 days before expiration of the time stated in § 598.6. The petition

must be submitted to: Administrator, National Highway Traffic Safety Administration, 400 Seventh Street, SW., Washington, DC 20590. The filing of a petition does not automatically extend the time for filing a report. A petition will be granted only if the petitioner shows good cause for the extension and if the extension is consistent with the public interest.

Issued on May 10, 2004.

Stephen R. Kratzke,

Associate Administrator for Rulemaking.

[FR Doc. 04–10931 Filed 5–12–04; 1:30 pm]

BILLING CODE 4910–59–P

Federal Register

Monday,
May 17, 2004

Part V

The President

Executive Order 13339—Increasing Economic Opportunity and Business Participation of Asian Americans and Pacific Islanders

Federal Register
Vol. 69, No. 95
Monday, May 17, 2004

Presidential Documents

Title 3—

The President

Executive Order 13339 of May 13, 2004

Increasing Economic Opportunity and Business Participation of Asian Americans and Pacific Islanders

By the authority vested in me as President by the Constitution and the laws of the United States of America, and for the purpose of providing equal economic opportunities for full participation of Asian American and Pacific Islander businesses in our free market economy where they may be underserved and thus improving the quality of life for Asian Americans and Pacific Islanders, it is hereby ordered as follows:

Section 1. (a) There is established in the Department of Commerce the President's Advisory Commission on Asian Americans and Pacific Islanders (Commission). The Commission shall consist of not more than 15 members appointed by the President, one of whom shall be designated by the President as Chair. The Commission shall include members who: (i) have a history of involvement with the Asian American and Pacific Islander communities; (ii) are from the business enterprise sector; (iii) are from civic associations representing one or more of the diverse Asian American and Pacific Islander communities; (iv) are from the fields of economic, social, and community development; or (v) have such other experience as the President deems appropriate.

(b) The Secretary of Commerce (Secretary) shall designate an Executive Director for the Commission.

Sec. 2. The Commission shall provide advice to the President, through the Secretary, on:

(a) the development, monitoring, and coordination of executive branch efforts to improve the economic and community development of Asian American and Pacific Islander businesses through ensuring equal opportunity to participate in Federal programs, and public-sector, private-sector partnerships, and through the collection of data related to Asian American and Pacific Islander businesses; and

(b) ways to increase the business diversification of Asian Americans and Pacific Islanders, including ways to foster research and data on Asian American and Pacific Islander businesses including their level of participation in the national economy and their economic and community development.

Sec. 3. (a) The Secretary shall establish within the Department of Commerce an office known as the White House Initiative on Asian Americans and Pacific Islanders (Office). The Office shall provide support for the Commission and the interagency working group created in section 3(b) of this order.

(b) The Secretary shall also create an interagency working group (Working Group) whose activities shall be coordinated by the Department of Commerce. The Secretary shall designate the executive departments and agencies that shall serve on the Working Group (executive departments and agencies) and the heads of those departments and agencies shall select the officials that shall serve as their respective representatives on the Working Group. The Executive Director of the Commission shall also serve as the Director of the Office and the Working Group, and shall report to the Secretary or the Secretary's designee. The Director of the Working Group shall advise the Secretary or the Secretary's designee on efforts by the Federal Government to improve access to economic opportunities, through equal access to such opportunities, for Asian American and Pacific Islander businesses where

they may be underserved and thus to improve the quality of life of Asian Americans and Pacific Islanders.

Sec. 4. The head of each executive department and agency on the Working Group shall designate a senior Federal official responsible for management or program administration to report directly to the agency head on activities implementing this order and to serve as a liaison to, and representative on, the Working Group. The Secretary may designate additional Federal officials, with the concurrence of the head of the designated executive department or agency, to carry out functions of the Working Group. To the extent permitted by law and to the extent practicable, each designated executive department and agency shall provide appropriate information requested by the Working Group, including data relating to the eligibility for and participation of Asian American and Pacific Islander businesses in Federal programs. Where adequate data are not available, the Working Group shall suggest the means of collecting such data.

Sec. 5. Each designated executive department and agency shall prepare a plan for, and shall document, its efforts to support economic opportunities for Asian American and Pacific Islander businesses. This plan shall address, among other things, executive branch efforts to:

(a) increase participation in Federal programs for Asian American and Pacific Islander businesses through equal access to such programs;

(b) ensure nondiscrimination in Federal contracts and procurement opportunities;

(c) provide equal opportunity for public-sector, private-sector partnerships for the community and economic development of Asian American and Pacific Islander businesses; and

(d) foster research and data collection on Asian American and Pacific Islander businesses. Each plan shall be submitted through the working group and the Commission to the Secretary at a date to be established by the Secretary.

Sec. 6. The Secretary shall review the plans of the designated executive departments and agencies and develop for submission to the President for his approval an integrated Federal plan (Federal Plan) to increase the participation of Asian American and Pacific Islander businesses in executive branch programs through equal access to such programs where such organizations may be underserved. Actions described in the Federal Plan shall address improving access by Asian American and Pacific Islander businesses to Federal programs and fostering advances in relevant research and data as it pertains to community economic development. The Secretary shall disseminate the Federal Plan, to the extent the Plan is approved by the President, to appropriate members of the executive branch. The findings and recommendations in the Federal Plan shall be followed by the designated executive departments and agencies in their policies and activities, to the extent permitted by law and as practicable.

Sec. 7. Insofar as the Federal Advisory Committee Act, as amended (5 U.S.C. App.) (the ''Act''), may apply to the administration of any portion of this order, any functions of the President under the Act, except that of reporting to the Congress, shall be performed by the Secretary in accordance with the guidelines issued by the Administrator of General Services.

Sec. 8. Members of the Commission shall serve without compensation, but shall be allowed travel expenses, including *per diem* in lieu of subsistence, as authorized by law for persons serving intermittently in the Government service (5 U.S.C. 5701–5707). To the extent permitted by law and appropriations, and where practicable, executive departments and agencies shall, upon request by the Secretary, provide assistance to the Commission and to the Working Group, and the Department of Commerce shall provide administrative support and funding for the Commission.

Sec. 9. The Commission shall terminate 2 years from the date of this order, unless renewed by the President.

Sec. 10. For the purposes of this order, the term: (a) ''Asian'' includes persons having origins in any of the original peoples of the Far East, Southeast Asia, or the Indian subcontinent; and the term (b) ''Pacific Islander'' includes persons having origins in any of the original peoples of Hawaii, Guam, Samoa, or other Pacific Islands.

Sec. 11. The Secretary of Commerce shall consult the Attorney General as appropriate on the implementation of this order to ensure that such implementation affords the equal protection of the laws required by the due process clause of the Fifth Amendment to the Constitution.

Sec. 12. This order is not intended to, and does not, create any right or benefit, substantive or procedural, enforceable at law or in equity, by a party against the United States, its departments, agencies, entities, officers, employees or agents, or any other person.

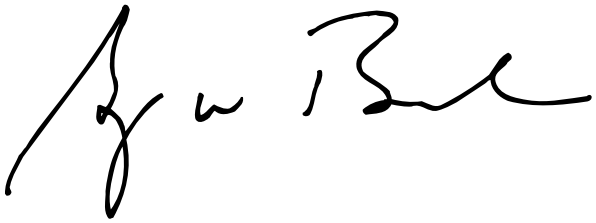

THE WHITE HOUSE,
May 13, 2004.

[FR Doc. 04–11271
Filed 5–14–04; 10:17 am]
Billing code 3195–01–P

Reader Aids

Federal Register

Vol. 69, No. 95

Monday, May 17, 2004

CUSTOMER SERVICE AND INFORMATION

Federal Register/Code of Federal Regulations	
General Information, indexes and other finding aids	**202–741–6000**
Laws	**741–6000**
Presidential Documents	
Executive orders and proclamations	**741–6000**
The United States Government Manual	**741–6000**
Other Services	
Electronic and on-line services (voice)	**741–6020**
Privacy Act Compilation	**741–6064**
Public Laws Update Service (numbers, dates, etc.)	**741–6043**
TTY for the deaf-and-hard-of-hearing	**741–6086**

ELECTRONIC RESEARCH

World Wide Web

Full text of the daily Federal Register, CFR and other publications is located at: **http://www.gpoaccess.gov/nara/index.html**

Federal Register information and research tools, including Public Inspection List, indexes, and links to GPO Access are located at: **http://www.archives.gov/federal_register/**

E-mail

FEDREGTOC-L (Federal Register Table of Contents LISTSERV) is an open e-mail service that provides subscribers with a digital form of the Federal Register Table of Contents. The digital form of the Federal Register Table of Contents includes HTML and PDF links to the full text of each document.

To join or leave, go to **http://listserv.access.gpo.gov** and select *Online mailing list archives, FEDREGTOC-L, Join or leave the list (orchange settings);* then follow the instructions.

PENS (Public Law Electronic Notification Service) is an e-mail service that notifies subscribers of recently enacted laws.

To subscribe, go to **http://listserv.gsa.gov/archives/publaws-l.html** and select *Join or leave the list* (or change settings); then follow the instructions.

FEDREGTOC-L and **PENS** are mailing lists only. We cannot respond to specific inquiries.

Reference questions. Send questions and comments about the Federal Register system to: **fedreg.info@nara.gov**

The Federal Register staff cannot interpret specific documents or regulations.

FEDERAL REGISTER PAGES AND DATE, MAY

24063–24504 3
24505–24904 4
24905–25302 5
25303–25478 6
25479–25816 7
25817–25996 10
25997–26298 11
26299–26472 12
26473–26754 13
26755–27816 14
27817–28040 17

CFR PARTS AFFECTED DURING MAY

At the end of each month, the Office of the Federal Register publishes separately a List of CFR Sections Affected (LSA), which lists parts and sections affected by documents published since the revision date of each title.

2 CFR

Subtitle A 26276
Subtitle B 26276
215.....26281

3 CFR

Proclamations:
7776.....25283
7777.....25285
7778.....25287
7779.....25289
7780.....25291
7781.....26467
7782.....26469
7783.....26471
7784.....26473

Executive Orders:
10485 (See EO 13337) 25299
10530 (See EO 13337) 25299
11423 (Amended By EO 13337).....25299
13096 (Revoked By EO 13336).....25299
13175 (See EO 13336) 25299
13212 (See EO 13337) 25299
13224 (See EO 13338) 26751
13336.....25299
13337.....25299
13338.....26751
13339.....28037

Administrative Orders:
Presidential Determinations:
No. 2004-29 of April 21, 2004 24905
No. 2004-30 of April 21, 2004 24907

5 CFR

532.....26475
550.....26475
595.....27817

7 CFR

6.....27818
301 .....24909, 25303, 27821
319.....24916
800.....26476
1410.....26755

Proposed Rules:
457.....27864
762.....24537
1739.....26777
1770.....25848

9 CFR

53.....27823
71.....27823
92.....25817
93.....25820
94.....25820
95.....25820
130.....25305

Proposed Rules:
78.....25338
317.....24539
381.....24539

10 CFR

2.....25997

12 CFR

208.....25672
229.....25826
352.....26490
614.....26763
617.....26763
620.....26763
630.....26763
701.....27827
703.....27827
709.....27827
715.....27827
723.....27827
725.....27827
1805.....26260

13 CFR

121.....25262
125.....25262
134.....25262

Proposed Rules:
121.....27865
126.....26511

14 CFR

23.....25998
25 .....24492, 24936, 26764
39 .....24063, 24938, 24940, 24941, 24944, 24945, 24947, 24950, 24952, 24953, 24954, 25479, 25481, 25483, 25485, 25488, 26000, 26001, 26003, 26005, 26006, 26008, 26010, 26012, 26013, 26015, 26017, 26018, 26020, 26022, 26024, 26025, 26027, 26299, 26434, 26494, 27829, 27831
71 .....24063, 24064, 24065, 24067, 24068, 25467, 26029, 26030, 26031, 26033, 26034, 26035
95.....24956
97.....24505
139.....24069

Proposed Rules:
39 .....24095, 24097, 24099, 24101, 24103, 24105, 25037, 25041, 25501, 25503, 25505, 25507, 25511, 25514, 25517,

25519, 25521, 25523, 25525, 26052, 26054, 26325, 26326, 26329, 26331, 27865, 27866, 27868
43 26054
71 ....26056, 26058
121 27980

15 CFR

736 26766
744 25312
774 ....24507, 24508, 25314
Proposed Rules:
754 25856

17 CFR

Proposed Rules:
15 26333
16 26333
17 26333
18 26333
19 26333
21 26333
210 26650
228 26650
229 26650
230 ....25182, 26650
232 26650
239 ....25182, 26650
240 ....25182, 25778, 26650
242 26650
245 26650
249 ....25182, 26650
275 25778
279 25778

18 CFR

381 27833

20 CFR

404 25949
408 25949

21 CFR

1 24070
73 24511
172 24511
175 24511
176 24511
177 24511
178 24511
184 24511
186 24511
335 26301
520 24958
522 25827
558 ....25315, 26498
600 26768
807 25489
866 26036
872 26302
Proposed Rules:
3 25527
101 24541

23 CFR

655 25828
Proposed Rules:
630 26513

24 CFR

Proposed Rules:
81 24228
990 24547
1000 25340

26 CFR

1 ....24071, 24078, 25315, 25489, 26038, 26040, 26304
Proposed Rules:
1 ....24107, 25534, 25535, 25856, 26782

27 CFR

9 25831

29 CFR

Proposed Rules:
1926 27870
4011 25797
4022 26769
4044 26769
4071 25797

30 CFR

50 26499
203 25499
206 24959
917 26500
Proposed Rules:
948 26340

31 CFR

Proposed Rules:
50 25341

33 CFR

62 24979
66 24979
67 24979
72 24979
100 24513
117 ....24080, 25316, 25317, 26042, 27834
165 ....24513, 24515, 25317, 25319, 26043, 27836
Proposed Rules:
110 26526
117 ....24548, 27870, 27872
165 ....24112, 24549, 24552, 26526, 26531, 26783

36 CFR

1200 26045
Proposed Rules:
7 25043

37 CFR

Proposed Rules:
1 25861

39 CFR

111 ....25321, 26305
Proposed Rules:
501 25864

40 CFR

9 24517
52 ....24986, 25835, 25839, 26503, 27837
63 25321
85 26222
86 26222
180 ....24984, 24992, 26305, 26770
300 26506
439 25324
716 24517
Proposed Rules:
51 25184
52 ....25051, 25348, 25865, 25866, 25869, 26533, 26786
60 25052
63 25052
81 25869
82 26059
180 26348
194 26351
281 25053

42 CFR

412 ....25674, 25752

44 CFR

206 24082
Proposed Rules:
17 24114
21 24114

47 CFR

0 ....24996, 27843
1 27843
54 25325
61 25325
69 25325
73 ....25844, 25845, 25846, 26312
97 24996
101 25337
Proposed Rules:
2 27874
15 26790
73 ....25873, 25874, 26061, 26353, 27874
74 27874

48 CFR

Ch. 1 25280
2 25274
5 25274
6 25274
13 25274
14 25274
15 25274
19 25274
33 25274
36 25274
52 25274
217 26507
225 26508
252 ....26508, 26509
1812 26775
1813 26776
Proposed Rules:
219 26533

49 CFR

192 27861
Proposed Rules:
171 25470
172 25470
173 25470
175 25470
178 ....25470, 26538
571 27990
598 27990

50 CFR

13 24084
17 24084
223 24997
300 24997
622 24532
648 26509
660 ....25013, 25026
679 ....26313, 26320
Proposed Rules:
17 ....24876, 25055, 27886
229 26539
635 ....25357, 26540
679 25056

REMINDERS

The items in this list were editorially compiled as an aid to Federal Register users. Inclusion or exclusion from this list has no legal significance.

RULES GOING INTO EFFECT MAY 17, 2004

AGRICULTURE DEPARTMENT

Import quotas and fees:
- Dairy tariff-rate quota licensing; published 5-17-04

DEFENSE DEPARTMENT

Engineers Corps

Danger zones and restricted areas:
- Point Mugu, CA; Naval Base Ventura County; published 4-16-04
- Port Hueneme, CA; Naval Base Ventura County; published 4-16-04
- San Francisco Bay, Yerba Buena Island, CA; published 4-16-04

ENVIRONMENTAL PROTECTION AGENCY

Air quality planning purposes; designation of areas:
- California; published 4-16-04

FEDERAL COMMUNICATIONS COMMISSION

Radio services, special:
- Maritime services—
  - Automated Maritime Telecommunications System; stations licensing process; published 4-15-04

HOMELAND SECURITY DEPARTMENT

Coast Guard

Drawbridge operations:
- New York; published 5-6-04

Outer Continental Shelf activities;
- Gulf of Mexico; safety zones; published 4-15-04

NATIONAL CREDIT UNION ADMINISTRATION

Credit unions:
- Organization and operations; technical corrections; published 5-17-04

TRANSPORTATION DEPARTMENT

Federal Aviation Administration

Airworthiness directives:
- Cessna; published 4-26-04

TRANSPORTATION DEPARTMENT

National Highway Traffic Safety Administration

Motor vehicle safety standards:
- Defect and noncompliance—
  - Potential defects; information and documents reporting; published 4-16-04

COMMENTS DUE NEXT WEEK

AGRICULTURE DEPARTMENT

Agricultural Marketing Service

Cranberries grown in—
- Massachusetts et al.; comments due by 5-28-04; published 4-28-04 [FR 04-09424]

Marketing order programs:
- Organic producers and marketers; exemption from assessments for market promotion activities; comments due by 5-26-04; published 4-26-04 [FR 04-09259]

Milk marketing orders:
- Northeast; comments due by 5-24-04; published 3-25-04 [FR 04-06459]

Nectarines and peaches grown in—
- California; comments due by 5-24-04; published 3-25-04 [FR 04-06702]

AGRICULTURE DEPARTMENT

Commodity Credit Corporation

Loan and purchase programs:
- Environmental Quality Incentives Program—
  - Conservation Innovation Grants; comments due by 5-28-04; published 3-29-04 [FR 04-06934]

COMMERCE DEPARTMENT

National Oceanic and Atmospheric Administration

Fishery conservation and management:
- Atlantic highly migratory species—
  - Large coastal sharks; semi-annual quotas adjustment; comments due by 5-28-04; published 5-13-04 [FR 04-10897]

COURT SERVICES AND OFFENDER SUPERVISION AGENCY FOR THE DISTRICT OF COLUMBIA

Semi-annual agenda; Open for comments until further notice; published 12-22-03 [FR 03-25121]

DEFENSE DEPARTMENT

Acquisition regulations:
- Contractors accompanying a force deployed; comments due by 5-24-04; published 3-23-04 [FR 04-06236]
- Task and delivery order contracts; contract period; comments due by 5-24-04; published 3-23-04 [FR 04-06289]

Federal Acquisition Regulation (FAR):
- Construction and architect-engineer contracts; application of the Brooks Act to mapping services; comments due by 5-24-04; published 3-23-04 [FR 04-06418]
- Federal prison industries purchases; market research requirement; comments due by 5-25-04; published 3-26-04 [FR 04-06800]

ENERGY DEPARTMENT

Federal Energy Regulatory Commission

Electric rate and corporate regulation filings:
- Virginia Electric & Power Co. et al.; Open for comments until further notice; published 10-1-03 [FR 03-24818]

ENVIRONMENTAL PROTECTION AGENCY

Air pollutants, hazardous; national emission standards:
- Stationary combustion turbines; comments due by 5-24-04; published 4-7-04 [FR 04-07776]

Air quality implementation plans; approval and promulgation; various States; air quality planning purposes; designation of areas:
- Arizona; comments due by 5-26-04; published 4-26-04 [FR 04-09277]
- California; comments due by 5-24-04; published 4-22-04 [FR 04-09036]

Air quality implementation plans; approval and promulgation; various States:
- Arizona; comments due by 5-24-04; published 4-22-04 [FR 04-09040]
- California; comments due by 5-24-04; published 4-22-04 [FR 04-09039]
- Kentucky; comments due by 5-24-04; published 4-23-04 [FR 04-09285]
- West Virginia; comments due by 5-28-04; published 4-28-04 [FR 04-09580]

Environmental statements; availability, etc.:
- Coastal nonpoint pollution control program—
  - Minnesota and Texas; Open for comments until further notice; published 10-16-03 [FR 03-26087]

Pesticides; tolerances in food, animal feeds, and raw agricultural commodities:
- Ammonium bicarbonate; comments due by 5-24-04; published 3-24-04 [FR 04-06431]

FEDERAL COMMUNICATIONS COMMISSION

Common carrier services:
- Communications disruptions; reporting requirements; comments due by 5-25-04; published 3-26-04 [FR 04-06618]
- Internet Protocol (IP)-enabled services; regulatory review; comments due by 5-28-04; published 3-29-04 [FR 04-06944]

Digital television stations; table of assignments:
- Puerto Rico; comments due by 5-24-04; published 4-13-04 [FR 04-08331]

Radio stations; table of assignments:
- Various States; comments due by 5-27-04; published 4-28-04 [FR 04-09641]

FEDERAL DEPOSIT INSURANCE CORPORATION

Credit unions:
- Fair and Accurate Credit Transactions Act (2003) implementation; fair credit reporting medical information regulations; comments due by 5-28-04; published 4-28-04 [FR 04-09526]

FEDERAL RESERVE SYSTEM

Credit unions:
- Fair and Accurate Credit Transactions Act (2003) imnplementation; fair credit reporting medical information regulations; comments due by 5-28-04; published 4-28-04 [FR 04-09526]

GENERAL SERVICES ADMINISTRATION

Federal Acquisition Regulation (FAR):
- Construction and architect-engineer contracts; application of the Brooks Act to mapping services; comments due by 5-24-04; published 3-23-04 [FR 04-06418]

Federal prison industries purchases; market research requirement; comments due by 5-25-04; published 3-26-04 [FR 04-06800]

HEALTH AND HUMAN SERVICES DEPARTMENT

Centers for Medicare & Medicaid Services

Medicare:

Durable medical equipment regional carriers; boundaries designation and contract administration; comments due by 5-25-04; published 3-26-04 [FR 04-06833]

HEALTH AND HUMAN SERVICES DEPARTMENT

Food and Drug Administration

Medical devices:

Cardiovascular and neurological—

Reclassification from Class III to Class II; comments due by 5-25-04; published 2-25-04 [FR 04-03858]

Reports and guidance documents; availability, etc.:

Evaluating safety of antimicrobial new animal drugs with regard to their microbiological effects on bacteria of human health concern; Open for comments until further notice; published 10-27-03 [FR 03-27113]

HOMELAND SECURITY DEPARTMENT

Coast Guard

Anchorage regulations:

Maryland; Open for comments until further notice; published 1-14-04 [FR 04-00749]

Ports and waterways safety:

Cape Fear River, Military Ocean Terminal Sunny Point, NC; security zone; comments due by 5-27-04; published 4-27-04 [FR 04-09481]

Lake Michigan, Sheboygan, Wisconsin; security zone; comments due by 5-28-04; published 3-29-04 [FR 04-06741]

New York fireworks displays; safety zones; comments due by 5-27-04; published 4-27-04 [FR 04-09554]

HOUSING AND URBAN DEVELOPMENT DEPARTMENT

Housing programs:

Data Universal Numbering System; indentifier use requirement; comments due by 5-25-04; published 3-26-04 [FR 04-06759]

Mortgage and loan insurance programs:

Home Equity Conversion Mortgage Program; insurance for mortgages to refinance existing loans; comments due by 5-24-04; published 3-25-04 [FR 04-06558]

INTERIOR DEPARTMENT

Fish and Wildlife Service

Endangered and threatened species:

Critical habitat designations—

Arroyo toad; comments due by 5-28-04; published 4-28-04 [FR 04-09204]

California tiger salamander; comments due by 5-28-04; published 4-13-04 [FR 04-08328]

Coastal California gnatcatcher; comments due by 5-24-04; published 4-8-04 [FR 04-07993]

Riverside fairy shrimp; comments due by 5-27-04; published 4-27-04 [FR 04-09203]

Importation, exportation, and transportation of wildlife:

Houston, TX; Louisville, KY; and Memphis, TN; designated port status; comments due by 5-24-04; published 4-22-04 [FR 04-09181]

INTERIOR DEPARTMENT

National Park Service

Concession contracts:

Authentic native handicrafts; sales; comments due by 5-24-04; published 3-25-04 [FR 04-06641]

Special regulations:

Chickasaw National Recreational Area, OK; personal watercraft use; comments due by 5-24-04; published 3-25-04 [FR 04-06640]

LABOR DEPARTMENT

Federal Contract Compliance Programs Office

Contractors and subcontractors; obligations:

Race and gender data solicitation for agency enforcement purposes; comments due by 5-28-04; published 3-29-04 [FR 04-06972]

NATIONAL AERONAUTICS AND SPACE ADMINISTRATION

Federal Acquisition Regulation (FAR):

Construction and architect-engineer contracts; application of the Brooks Act to mapping services; comments due by 5-24-04; published 3-23-04 [FR 04-06418]

Federal prison industries purchases; market research requirement; comments due by 5-25-04; published 3-26-04 [FR 04-06800]

NATIONAL CREDIT UNION ADMINISTRATION

Credit unions:

Fair and Accurate Credit Transactions Act (2003) implementation; fair credit reporting medical information regulations; comments due by 5-28-04; published 4-28-04 [FR 04-09526]

NUCLEAR REGULATORY COMMISSION

Environmental statements; availability, etc.:

Fort Wayne State Developmental Center; Open for comments until further notice; published 5-10-04 [FR 04-10516]

PERSONNEL MANAGEMENT OFFICE

Health benefits; Federal employees:

Contract cost principles and procedures; comments due by 5-25-04; published 3-26-04 [FR 04-06790]

POSTAL SERVICE

Domestic Mail Manual:

Merged five-digit and five digit scheme pallets for periodicals, standard mail, and package services mail; comments due by 5-26-04; published 4-26-04 [FR 04-09415]

SECURITIES AND EXCHANGE COMMISSION

Electronic Data Gathering, Analysis, and Retrieval (EDGAR) system:

Modernization; filing requirements; changes; comments due by 5-24-04; published 3-23-04 [FR 04-06404]

Securities:

National market system; joint industry plans; amendments; comments due by 5-24-04; published 3-9-04 [FR 04-04712]

SMALL BUSINESS ADMINISTRATION

Disaster loan areas:

Maine; Open for comments until further notice; published 2-17-04 [FR 04-03374]

TRANSPORTATION DEPARTMENT

Federal Aviation Administration

Airworthiness directives:

Airbus; comments due by 5-24-04; published 4-22-04 [FR 04-09111]

BAE Systems (Operations) Ltd.; comments due by 5-26-04; published 4-26-04 [FR 04-09381]

Bombardier; comments due by 5-26-04; published 4-26-04 [FR 04-09382]

Dassault; comments due by 5-27-04; published 4-27-04 [FR 04-09500]

Empresa Brasileria de Aeronautica S.A. (EMBRAER); comments due by 5-27-04; published 4-27-04 [FR 04-09499]

Eurocopter France; comments due by 5-25-04; published 3-26-04 [FR 04-06778]

Glaser-Dirks Flugzeugbau GmbH; comments due by 5-24-04; published 4-12-04 [FR 04-08220]

PZL-Bielsko; comments due by 5-24-04; published 4-21-04 [FR 04-09018]

Robinson Helicopter Co.; comments due by 5-25-04; published 3-26-04 [FR 04-06779]

Short Brothers; comments due by 5-24-04; published 4-22-04 [FR 04-09110]

Stemme GmbH & Co.; comments due by 5-26-04; published 4-16-04 [FR 04-08586]

Valentin GmbH & Co.; comments due by 5-27-04; published 4-22-04 [FR 04-09113]

Airworthiness standards:

Special conditions—

Cessna Model 525B-CJ3 airplane; comments due by 5-27-04; published 4-27-04 [FR 04-09514]

Class E airspace; comments due by 5-24-04; published 4-7-04 [FR 04-07880]

Definitions:

Review of existing regulations; comment request; comments due by 5-25-04; published 2-25-04 [FR 04-04171]

TREASURY DEPARTMENT

Comptroller of the Currency

Credit unions:

Fair and Accurate Credit Transactions Act (2003)

implementation; fair credit reporting medical information regulations; comments due by 5-28-04; published 4-28-04 [FR 04-09526]

Lending limits:

Residential real estate and small business loans; pilot program; comments due by 5-24-04; published 4-23-04 [FR 04-09360]

TREASURY DEPARTMENT

Internal Revenue Service

Employment taxes and collection of income taxes at source:

Student FICA exception; public hearing; comments due by 5-25-04; published 2-25-04 [FR 04-03994]

TREASURY DEPARTMENT

Thrift Supervision Office

Credit unions:

Fair and Accurate Credit Transactions Act (2003) implementation; fair credit reporting medical information regulations; comments due by 5-28-04; published 4-28-04 [FR 04-09526]

LIST OF PUBLIC LAWS

This is a continuing list of public bills from the current session of Congress which have become Federal laws. It may be used in conjunction with "P L U S" (Public Laws Update Service) on 202–741–6043. This list is also available online at *http://www.archives.gov/federal_register/public_laws/public_laws.html*.

The text of laws is not published in the **Federal Register** but may be ordered in "slip law" (individual pamphlet) form from the Superintendent of Documents, U.S. Government Printing Office, Washington, DC 20402 (phone, 202–512–1808). The text will also be made available on the Internet from GPO Access at *http://www.gpoaccess.gov/plaws/index.html*. Some laws may not yet be available.

S. 1904/P.L. 108–225
To designate the United States courthouse located at 400 North Miami Avenue in Miami, Florida, as the "Wilkie D. Ferguson, Jr. United States Courthouse". (May 7, 2004; 118 Stat. 641)

S. 2022/P.L. 108–226
To designate the Federal building located at 250 West Cherry Street in Carbondale, Illinois the "Senator Paul Simon Federal Building". (May 7, 2004; 118 Stat. 642)

S. 2043/P.L. 108–227
To designate a Federal building in Harrisburg, Pennsylvania, as the "Ronald Reagan Federal Building". (May 7, 2004; 118 Stat. 643)

Last List May 6, 2004

Public Laws Electronic Notification Service (PENS)

PENS is a free electronic mail notification service of newly enacted public laws. To subscribe, go to *http://listserv.gsa.gov/archives/publaws-l.html*

Note: This service is strictly for E-mail notification of new laws. The text of laws is not available through this service. **PENS** cannot respond to specific inquiries sent to this address.

CFR CHECKLIST

This checklist, prepared by the Office of the Federal Register, is published weekly. It is arranged in the order of CFR titles, stock numbers, prices, and revision dates.

An asterisk (*) precedes each entry that has been issued since last week and which is now available for sale at the Government Printing Office.

A checklist of current CFR volumes comprising a complete CFR set, also appears in the latest issue of the LSA (List of CFR Sections Affected), which is revised monthly.

The CFR is available free on-line through the Government Printing Office's GPO Access Service at http://www.access.gpo.gov/nara/cfr/index.html. For information about GPO Access call the GPO User Support Team at 1-888-293-6498 (toll free) or 202-512-1530.

The annual rate for subscription to all revised paper volumes is $1195.00 domestic, $298.75 additional for foreign mailing.

Mail orders to the Superintendent of Documents, Attn: New Orders, P.O. Box 371954, Pittsburgh, PA 15250–7954. All orders must be accompanied by remittance (check, money order, GPO Deposit Account, VISA, Master Card, or Discover). Charge orders may be telephoned to the GPO Order Desk, Monday through Friday, at **(202) 512–1800** from 8:00 a.m. to 4:00 p.m. eastern time, or FAX your charge orders to **(202) 512-2250**.

Title	Stock Number	Price	Revision Date
1, 2 (2 Reserved)	(869–052–00001–9)	9.00	[4] Jan. 1, 2004
3 (2003 Compilation and Parts 100 and 101)	(869–052–00002–7)	35.00	[1] Jan. 1, 2004
4	(869–052–00003–5)	10.00	Jan. 1, 2004
5 Parts:			
1–699	(869–052–00004–3)	60.00	Jan. 1, 2004
700–1199	(869–052–00005–1)	50.00	Jan. 1, 2004
1200–End	(869–052–00006–0)	61.00	Jan. 1, 2004
6	(869–052–00007–8)	10.50	Jan. 1, 2004
7 Parts:			
1–26	(869–052–00008–6)	44.00	Jan. 1, 2004
27–52	(869–052–00009–4)	49.00	Jan. 1, 2004
53–209	(869–052–00010–8)	37.00	Jan. 1, 2004
210–299	(869–052–00011–6)	62.00	Jan. 1, 2004
300–399	(869–052–00012–4)	46.00	Jan. 1, 2004
400–699	(869–052–00013–2)	42.00	Jan. 1, 2004
700–899	(869–052–00014–1)	43.00	Jan. 1, 2004
900–999	(869–052–00015–9)	60.00	Jan. 1, 2004
1000–1199	(869–052–00016–7)	22.00	Jan. 1, 2004
1200–1599	(869–052–00017–5)	61.00	Jan. 1, 2004
1600–1899	(869–052–00018–3)	64.00	Jan. 1, 2004
1900–1939	(869–052–00019–1)	31.00	Jan. 1, 2004
1940–1949	(869–052–00020–5)	50.00	Jan. 1, 2004
1950–1999	(869–052–00021–3)	46.00	Jan. 1, 2004
2000–End	(869–052–00022–1)	50.00	Jan. 1, 2004
8	(869–052–00023–0)	63.00	Jan. 1, 2004
9 Parts:			
1–199	(869–052–00024–8)	61.00	Jan. 1, 2004
200–End	(869–052–00025–6)	58.00	Jan. 1, 2004
10 Parts:			
1–50	(869–052–00026–4)	61.00	Jan. 1, 2004
51–199	(869–052–00027–2)	58.00	Jan. 1, 2004
200–499	(869–052–00028–1)	46.00	Jan. 1, 2004
500–End	(869–052–00029–9)	62.00	Jan. 1, 2004
11	(869–052–00030–2)	41.00	Feb. 3, 2004
12 Parts:			
1–199	(869–052–00031–1)	34.00	Jan. 1, 2004
200–219	(869–052–00032–9)	37.00	Jan. 1, 2004
220–299	(869–052–00033–7)	61.00	Jan. 1, 2004
300–499	(869–052–00034–5)	47.00	Jan. 1, 2004
500–599	(869–052–00035–3)	39.00	Jan. 1, 2004
600–899	(869–052–00036–1)	56.00	Jan. 1, 2004
900–End	(869–052–00037–0)	50.00	Jan. 1, 2004
13	(869–052–00038–8)	55.00	Jan. 1, 2004
14 Parts:			
1–59	(869–052–00039–6)	63.00	Jan. 1, 2004
60–139	(869–052–00040–0)	61.00	Jan. 1, 2004
140–199	(869–052–00041–8)	30.00	Jan. 1, 2004
200–1199	(869–052–00042–6)	50.00	Jan. 1, 2004
1200–End	(869–052–00043–4)	45.00	Jan. 1, 2004
15 Parts:			
0–299	(869–052–00044–2)	40.00	Jan. 1, 2004
300–799	(869–052–00045–1)	60.00	Jan. 1, 2004
800–End	(869–052–00046–9)	42.00	Jan. 1, 2004
16 Parts:			
0–999	(869–052–00047–7)	50.00	Jan. 1, 2004
1000–End	(869–052–00048–5)	60.00	Jan. 1, 2004
17 Parts:			
1–199	(869–050–00049–1)	50.00	Apr. 1, 2003
200–239	(869–050–00050–4)	58.00	Apr. 1, 2003
240–End	(869–050–00051–2)	62.00	Apr. 1, 2003
18 Parts:			
1–399	(869–050–00052–1)	62.00	Apr. 1, 2003
400–End	(869–050–00053–9)	25.00	Apr. 1, 2003
19 Parts:			
1–140	(869–050–00054–7)	60.00	Apr. 1, 2003
141–199	(869–050–00055–5)	58.00	Apr. 1, 2003
200–End	(869–050–00056–3)	30.00	Apr. 1, 2003
20 Parts:			
1–399	(869–050–00057–1)	50.00	Apr. 1, 2003
400–499	(869–050–00058–0)	63.00	Apr. 1, 2003
500–End	(869–050–00059–8)	63.00	Apr. 1, 2003
21 Parts:			
1–99	(869–050–00060–1)	40.00	Apr. 1, 2003
100–169	(869–050–00061–0)	47.00	Apr. 1, 2003
170–199	(869–050–00062–8)	50.00	Apr. 1, 2003
200–299	(869–050–00063–6)	17.00	Apr. 1, 2003
300–499	(869–050–00064–4)	29.00	Apr. 1, 2003
500–599	(869–050–00065–2)	47.00	Apr. 1, 2003
600–799	(869–050–00066–1)	15.00	Apr. 1, 2003
800–1299	(869–050–00067–9)	58.00	Apr. 1, 2003
1300–End	(869–050–00068–7)	22.00	Apr. 1, 2003
22 Parts:			
1–299	(869–050–00069–5)	62.00	Apr. 1, 2003
300–End	(869–050–00070–9)	44.00	Apr. 1, 2003
23	(869–050–00071–7)	44.00	Apr. 1, 2003
24 Parts:			
0–199	(869–050–00072–5)	58.00	Apr. 1, 2003
200–499	(869–050–00073–3)	50.00	Apr. 1, 2003
500–699	(869–050–00074–1)	30.00	Apr. 1, 2003
700–1699	(869–050–00075–0)	61.00	Apr. 1, 2003
1700–End	(869–050–00076–8)	30.00	Apr. 1, 2003
25	(869–050–00077–6)	63.00	Apr. 1, 2003
26 Parts:			
§§ 1.0–1–1.60	(869–050–00078–4)	49.00	Apr. 1, 2003
§§ 1.61–1.169	(869–050–00079–2)	63.00	Apr. 1, 2003
§§ 1.170–1.300	(869–050–00080–6)	57.00	Apr. 1, 2003
§§ 1.301–1.400	(869–050–00081–4)	46.00	Apr. 1, 2003
§§ 1.401–1.440	(869–050–00082–2)	61.00	Apr. 1, 2003
§§ 1.441–1.500	(869–050–00083–1)	50.00	Apr. 1, 2003
§§ 1.501–1.640	(869–050–00084–9)	49.00	Apr. 1, 2003
§§ 1.641–1.850	(869–050–00085–7)	60.00	Apr. 1, 2003
§§ 1.851–1.907	(869–050–00086–5)	60.00	Apr. 1, 2003
§§ 1.908–1.1000	(869–050–00087–3)	60.00	Apr. 1, 2003
§§ 1.1001–1.1400	(869–050–00088–1)	61.00	Apr. 1, 2003
§§ 1.1401–1.1503–2A	(869–050–00089–0)	50.00	Apr. 1, 2003
§§ 1.1551–End	(869–050–00090–3)	50.00	Apr. 1, 2003
2–29	(869–050–00091–1)	60.00	Apr. 1, 2003
30–39	(869–050–00092–0)	41.00	Apr. 1, 2003
40–49	(869–050–00093–8)	26.00	Apr. 1, 2003
50–299	(869–050–00094–6)	41.00	Apr. 1, 2003
300–499	(869–050–00095–4)	61.00	Apr. 1, 2003

Title	Stock Number	Price	Revision Date
500–599	(869–050–00096–2)	12.00	[5]Apr. 1, 2003
600–End	(869–050–00097–1)	17.00	Apr. 1, 2003
27 Parts:			
1–199	(869–050–00098–9)	63.00	Apr. 1, 2003
200–End	(869–050–00099–7)	25.00	Apr. 1, 2003
28 Parts:			
0–42	(869–050–00100–4)	61.00	July 1, 2003
43–End	(869–050–00101–2)	58.00	July 1, 2003
29 Parts:			
0–99	(869–050–00102–1)	50.00	July 1, 2003
100–499	(869–050–00103–9)	22.00	July 1, 2003
500–899	(869–050–00104–7)	61.00	July 1, 2003
900–1899	(869–050–00105–5)	35.00	July 1, 2003
1900–1910 (§§ 1900 to 1910.999)	(869–050–00106–3)	61.00	July 1, 2003
1910 (§§ 1910.1000 to end)	(869–050–00107–1)	46.00	July 1, 2003
1911–1925	(869–050–00108–0)	30.00	July 1, 2003
1926	(869–050–00109–8)	50.00	July 1, 2003
1927–End	(869–050–00110–1)	62.00	July 1, 2003
30 Parts:			
1–199	(869–050–00111–0)	57.00	July 1, 2003
200–699	(869–050–00112–8)	50.00	July 1, 2003
700–End	(869–050–00113–6)	57.00	July 1, 2003
31 Parts:			
0–199	(869–050–00114–4)	40.00	July 1, 2003
200–End	(869–050–00115–2)	64.00	July 1, 2003
32 Parts:			
1–39, Vol. I		15.00	[2]July 1, 1984
1–39, Vol. II		19.00	[2]July 1, 1984
1–39, Vol. III		18.00	[2]July 1, 1984
1–190	(869–050–00116–1)	60.00	July 1, 2003
191–399	(869–050–00117–9)	63.00	July 1, 2003
400–629	(869–050–00118–7)	50.00	July 1, 2003
630–699	(869–050–00119–5)	37.00	[7]July 1, 2003
700–799	(869–050–00120–9)	46.00	July 1, 2003
800–End	(869–050–00121–7)	47.00	July 1, 2003
33 Parts:			
1–124	(869–050–00122–5)	55.00	July 1, 2003
125–199	(869–050–00123–3)	61.00	July 1, 2003
200–End	(869–050–00124–1)	50.00	July 1, 2003
34 Parts:			
1–299	(869–050–00125–0)	49.00	July 1, 2003
300–399	(869–050–00126–8)	43.00	[7]July 1, 2003
400–End	(869–050–00127–6)	61.00	July 1, 2003
35	(869–050–00128–4)	10.00	[6]July 1, 2003
36 Parts			
1–199	(869–050–00129–2)	37.00	July 1, 2003
200–299	(869–050–00130–6)	37.00	July 1, 2003
300–End	(869–050–00131–4)	61.00	July 1, 2003
37	(869–050–00132–2)	50.00	July 1, 2003
38 Parts:			
0–17	(869–050–00133–1)	58.00	July 1, 2003
18–End	(869–050–00134–9)	62.00	July 1, 2003
39	(869–050–00135–7)	41.00	July 1, 2003
40 Parts:			
1–49	(869–050–00136–5)	60.00	July 1, 2003
50–51	(869–050–00137–3)	44.00	July 1, 2003
52 (52.01–52.1018)	(869–050–00138–1)	58.00	July 1, 2003
52 (52.1019–End)	(869–050–00139–0)	61.00	July 1, 2003
53–59	(869–050–00140–3)	31.00	July 1, 2003
60 (60.1–End)	(869–050–00141–1)	58.00	July 1, 2003
60 (Apps)	(869–050–00142–0)	51.00	[8]July 1, 2003
61–62	(869–050–00143–8)	43.00	July 1, 2003
63 (63.1–63.599)	(869–050–00144–6)	58.00	July 1, 2003
63 (63.600–63.1199)	(869–050–00145–4)	50.00	July 1, 2003
63 (63.1200–63.1439)	(869–050–00146–2)	50.00	July 1, 2003
63 (63.1440–End)	(869–050–00147–1)	64.00	July 1, 2003
64–71	(869–050–00148–9)	29.00	July 1, 2003
72–80	(869–050–00149–7)	61.00	July 1, 2003
81–85	(869–050–00150–1)	50.00	July 1, 2003
86 (86.1–86.599–99)	(869–050–00151–9)	57.00	July 1, 2003
86 (86.600–1–End)	(869–050–00152–7)	50.00	July 1, 2003
87–99	(869–050–00153–5)	60.00	July 1, 2003
100–135	(869–050–00154–3)	43.00	July 1, 2003
136–149	(869–150–00155–1)	61.00	July 1, 2003
150–189	(869–050–00156–0)	49.00	July 1, 2003
190–259	(869–050–00157–8)	39.00	July 1, 2003
260–265	(869–050–00158–6)	50.00	July 1, 2003
266–299	(869–050–00159–4)	50.00	July 1, 2003
300–399	(869–050–00160–8)	42.00	July 1, 2003
400–424	(869–050–00161–6)	56.00	July 1, 2003
425–699	(869–050–00162–4)	61.00	July 1, 2003
700–789	(869–050–00163–2)	61.00	July 1, 2003
790–End	(869–050–00164–1)	58.00	July 1, 2003
41 Chapters:			
1, 1–1 to 1–10		13.00	[3]July 1, 1984
1, 1–11 to Appendix, 2 (2 Reserved)		13.00	[3]July 1, 1984
3–6		14.00	[3]July 1, 1984
7		6.00	[3]July 1, 1984
8		4.50	[3]July 1, 1984
9		13.00	[3]July 1, 1984
10–17		9.50	[3]July 1, 1984
18, Vol. I, Parts 1–5		13.00	[3]July 1, 1984
18, Vol. II, Parts 6–19		13.00	[3]July 1, 1984
18, Vol. III, Parts 20–52		13.00	[3]July 1, 1984
19–100		13.00	[3]July 1, 1984
1–100	(869–050–00165–9)	23.00	[7]July 1, 2003
101	(869–050–00166–7)	24.00	July 1, 2003
102–200	(869–050–00167–5)	50.00	July 1, 2003
201–End	(869–050–00168–3)	22.00	July 1, 2003
42 Parts:			
1–399	(869–050–00169–1)	60.00	Oct. 1, 2003
400–429	(869–050–00170–5)	62.00	Oct. 1, 2003
430–End	(869–050–00171–3)	64.00	Oct. 1, 2003
43 Parts:			
1–999	(869–050–00172–1)	55.00	Oct. 1, 2003
1000–end	(869–050–00173–0)	62.00	Oct. 1, 2003
44	(869–050–00174–8)	50.00	Oct. 1, 2003
45 Parts:			
1–199	(869–050–00175–6)	60.00	Oct. 1, 2003
200–499	(869–050–00176–4)	33.00	Oct. 1, 2003
500–1199	(869–050–00177–2)	50.00	Oct. 1, 2003
1200–End	(869–050–00178–1)	60.00	Oct. 1, 2003
46 Parts:			
1–40	(869–050–00179–9)	46.00	Oct. 1, 2003
41–69	(869–050–00180–2)	39.00	Oct. 1, 2003
70–89	(869–050–00181–1)	14.00	Oct. 1, 2003
90–139	(869–050–00182–9)	44.00	Oct. 1, 2003
140–155	(869–050–00183–7)	25.00	Oct. 1, 2003
156–165	(869–050–00184–5)	34.00	Oct. 1, 2003
166–199	(869–050–00185–3)	46.00	Oct. 1, 2003
200–499	(869–050–00186–1)	39.00	Oct. 1, 2003
500–End	(869–050–00187–0)	25.00	Oct. 1, 2003
47 Parts:			
0–19	(869–050–00188–8)	61.00	Oct. 1, 2003
20–39	(869–050–00189–6)	45.00	Oct. 1, 2003
40–69	(869–050–00190–0)	39.00	Oct. 1, 2003
70–79	(869–050–00191–8)	61.00	Oct. 1, 2003
80–End	(869–050–00192–6)	61.00	Oct. 1, 2003
48 Chapters:			
1 (Parts 1–51)	(869–050–00193–4)	63.00	Oct. 1, 2003
1 (Parts 52–99)	(869–050–00194–2)	50.00	Oct. 1, 2003
2 (Parts 201–299)	(869–050–00195–1)	55.00	Oct. 1, 2003
3–6	(869–050–00196–9)	33.00	Oct. 1, 2003
7–14	(869–050–00197–7)	61.00	Oct. 1, 2003
15–28	(869–050–00198–5)	57.00	Oct. 1, 2003
29–End	(869–050–00199–3)	38.00	[9]Oct. 1, 2003
49 Parts:			
1–99	(869–050–00200–1)	60.00	Oct. 1, 2003

Title	Stock Number	Price	Revision Date
100–185	(869–050–00201–9)	63.00	Oct. 1, 2003
186–199	(869–050–00202–7)	20.00	Oct. 1, 2003
200–399	(869–050–00203–5)	64.00	Oct. 1, 2003
400–599	(869–050–00204–3)	63.00	Oct. 1, 2003
600–999	(869–050–00205–1)	22.00	Oct. 1, 2003
1000–1199	(869–050–00206–0)	26.00	Oct. 1, 2003
1200–End	(869–048–00207–8)	33.00	Oct. 1, 2003
50 Parts:			
1–16	(869–050–00208–6)	11.00	Oct. 1, 2003
17.1–17.95	(869–050–00209–4)	62.00	Oct. 1, 2003
17.96–17.99(h)	(869–050–00210–8)	61.00	Oct. 1, 2003
17.99(i)–end	(869–050–00211–6)	50.00	Oct. 1, 2003
18–199	(869–050–00212–4)	42.00	Oct. 1, 2003
200–599	(869–050–00213–2)	44.00	Oct. 1, 2003
600–End	(869–050–00214–1)	61.00	Oct. 1, 2003
CFR Index and Findings Aids	(869–052–00049–3)	62.00	Jan. 1, 2004
Complete 2004 CFR set		1,342.00	2004
Microfiche CFR Edition:			
Subscription (mailed as issued)		325.00	2004
Individual copies		2.00	2004
Complete set (one-time mailing)		298.00	2003
Complete set (one-time mailing)		298.00	2002

[1] Because Title 3 is an annual compilation, this volume and all previous volumes should be retained as a permanent reference source.

[2] The July 1, 1985 edition of 32 CFR Parts 1–189 contains a note only for Parts 1–39 inclusive. For the full text of the Defense Acquisition Regulations in Parts 1–39, consult the three CFR volumes issued as of July 1, 1984, containing those parts.

[3] The July 1, 1985 edition of 41 CFR Chapters 1–100 contains a note only for Chapters 1 to 49 inclusive. For the full text of procurement regulations in Chapters 1 to 49, consult the eleven CFR volumes issued as of July 1, 1984 containing those chapters.

[4] No amendments to this volume were promulgated during the period January 1, 2003, through January 1, 2004. The CFR volume issued as of January 1, 2002 should be retained.

[5] No amendments to this volume were promulgated during the period April 1, 2000, through April 1, 2003. The CFR volume issued as of April 1, 2000 should be retained.

[6] No amendments to this volume were promulgated during the period July 1, 2000, through July 1, 2003. The CFR volume issued as of July 1, 2000 should be retained.

[7] No amendments to this volume were promulgated during the period July 1, 2002, through July 1, 2003. The CFR volume issued as of July 1, 2002 should be retained.

[8] No amendments to this volume were promulgated during the period July 1, 2001, through July 1, 2003. The CFR volume issued as of July 1, 2001 should be retained.

[9] No amendments to this volume were promulgated during the period October 1, 2001, through October 1, 2003. The CFR volume issued as of October 1, 2001 should be retained.