Federal Register

12–1–04 Wednesday
Vol. 69 No. 230 Dec. 1, 2004

Pages 69805–70050

The **FEDERAL REGISTER** (ISSN 0097–6326) is published daily, Monday through Friday, except official holidays, by the Office of the Federal Register, National Archives and Records Administration, Washington, DC 20408, under the Federal Register Act (44 U.S.C. Ch. 15) and the regulations of the Administrative Committee of the Federal Register (1 CFR Ch. I). The Superintendent of Documents, U.S. Government Printing Office, Washington, DC 20402 is the exclusive distributor of the official edition. Periodicals postage is paid at Washington, DC.

The **FEDERAL REGISTER** provides a uniform system for making available to the public regulations and legal notices issued by Federal agencies. These include Presidential proclamations and Executive Orders, Federal agency documents having general applicability and legal effect, documents required to be published by act of Congress, and other Federal agency documents of public interest.

Documents are on file for public inspection in the Office of the Federal Register the day before they are published, unless the issuing agency requests earlier filing. For a list of documents currently on file for public inspection, see *www.archives.gov.*

The seal of the National Archives and Records Administration authenticates the Federal Register as the official serial publication established under the Federal Register Act. Under 44 U.S.C. 1507, the contents of the **Federal Register** shall be judicially noticed.

The **Federal Register** is published in paper and on 24x microfiche. It is also available online at no charge as one of the databases on GPO Access, a service of the U.S. Government Printing Office.

The online edition of the **Federal Register** *www.gpoaccess.gov/nara,* available through GPO Access, is issued under the authority of the Administrative Committee of the Federal Register as the official legal equivalent of the paper and microfiche editions (44 U.S.C. 4101 and 1 CFR 5.10). It is updated by 6 a.m. each day the **Federal Register** is published and includes both text and graphics from Volume 59, Number 1 (January 2, 1994) forward.

For more information about GPO Access, contact the GPO Access User Support Team, call toll free 1-888-293-6498; DC area 202-512-1530; fax at 202-512-1262; or via e-mail at *gpoaccess@gpo.gov.* The Support Team is available between 7:00 a.m. and 9:00 p.m. Eastern Time, Monday–Friday, except official holidays.

The annual subscription price for the **Federal Register** paper edition is $749 plus postage, or $808, plus postage, for a combined **Federal Register, Federal Register** Index and List of CFR Sections Affected (LSA) subscription; the microfiche edition of the **Federal Register** including the **Federal Register** Index and LSA is $165, plus postage. Six month subscriptions are available for one-half the annual rate. The prevailing postal rates will be applied to orders according to the delivery method requested. The price of a single copy of the daily **Federal Register,** including postage, is based on the number of pages: $11 for an issue containing less than 200 pages; $22 for an issue containing 200 to 400 pages; and $33 for an issue containing more than 400 pages. Single issues of the microfiche edition may be purchased for $3 per copy, including postage. Remit check or money order, made payable to the Superintendent of Documents, or charge to your GPO Deposit Account, VISA, MasterCard, American Express, or Discover. Mail to: New Orders, Superintendent of Documents, P.O. Box 371954, Pittsburgh, PA 15250-7954; or call toll free 1-866-512-1800, DC area 202-512-1800; or go to the U.S. Government Online Bookstore site, see *bookstore.gpo.gov.*

There are no restrictions on the republication of material appearing in the **Federal Register.**

How To Cite This Publication: Use the volume number and the page number. Example: 69 FR 12345.

Postmaster: Send address changes to the Superintendent of Documents, Federal Register, U.S. Government Printing Office, Washington DC 20402, along with the entire mailing label from the last issue received.

SUBSCRIPTIONS AND COPIES

PUBLIC

Subscriptions:

Paper or fiche	**202–512–1800**
Assistance with public subscriptions	**202–512–1806**

General online information **202–512–1530; 1–888–293–6498**

Single copies/back copies:

Paper or fiche	**202–512–1800**
Assistance with public single copies	**1–866–512–1800 (Toll-Free)**

FEDERAL AGENCIES

Subscriptions:

Paper or fiche	**202–741–6005**
Assistance with Federal agency subscriptions	**202–741–6005**

What's NEW!

Federal Register Table of Contents via e-mail

Subscribe to FEDREGTOC, to receive the **Federal Register** Table of Contents in your e-mail every day.

If you get the HTML version, you can click directly to any document in the issue.

To subscribe, go to **http://listserv.access.gpo.gov** and select:

Online mailing list archives
FEDREGTOC-L
Join or leave the list

Then follow the instructions.

What's NEW!

Regulations.gov, the award-winning Federal eRulemaking Portal

Regulations.gov is the one-stop U.S. Government web site that makes it easy to participate in the regulatory process.

Try this fast and reliable resource to find all rules published in the *Federal Register* that are currently open for public comment. Submit comments to agencies by filling out a simple web form, or use available e-mail addresses and web sites.

The Regulations.gov e-democracy initiative is brought to you by NARA, GPO, EPA and their eRulemaking partners.

Visit the web site at: **http://www.regulations.gov**

Printed on recycled paper.

Contents

Federal Register

Vol. 69, No. 230

Wednesday, December 1, 2004

Administration on Aging
See Aging Administration

Aging Administration
NOTICES
Meetings:
2005 White House Conference on Aging Policy Committee, 69941

Agricultural Marketing Service
PROPOSED RULES
Cranberries grown in—
Massachusetts et al., 69995–70014

Agriculture Department
See Agricultural Marketing Service
See Forest Service
See Grain Inspection, Packers and Stockyards Administration
See Natural Resources Conservation Service

Centers for Disease Control and Prevention
NOTICES
Agency information collection activities; proposals, submissions, and approvals, 69941–69944
Meetings:
National Institute for Occupational Safety and Health—
Radiation and Worker Health Advisory Board, 69944–69945

Commerce Department
See Industry and Security Bureau
See International Trade Administration
See National Oceanic and Atmospheric Administration
See Patent and Trademark Office
NOTICES
Agency information collection activities; proposals, submissions, and approvals, 69886–69887

Copyright Office, Library of Congress
RULES
Copyright Arbitration Royalty Panel rules and procedures:
Musical compositions performance by colleges and universities; cost of living adjustment, 69822–69823

Defense Department
NOTICES
Agency information collection activities; proposals, submissions, and approvals, 69894–69897
Federal Acquisition Regulation (FAR):
Agency information collection activities; proposals, submissions, and approvals, 69897–69898

Education Department
NOTICES
Grants and cooperative agreements; availability, etc.:
Elementary and secondary education—
Comprehensive School Reform Quality Initiatives Program, 69898–69900
Special education and rehabilitative services:
Blind vending facilities under Randolph-Sheppard Act—
Arbitration panel decisions, 69900–69901

Energy Department
See Federal Energy Regulatory Commission
NOTICES
Environmental statements; record of decision:
Foreign research reactor spent nuclear fuel; nuclear weapons nonproliferation policy, 69901–69903
Meetings:
Environmental Management Site-Specific Advisory Board—
Paducah Gaseous Diffusion Plant, KY, 69903

Environmental Protection Agency
RULES
Air quality implementation plans; approval and promulgation; various States:
Oregon, 69823–69826
PROPOSED RULES
Air pollutants, hazardous; national emission standards:
Electric utility steam generating units, 69864–69878
Air quality implementation plans; approval and promulgation; various States:
Oregon, 69863–69864
NOTICES
Agency information collection activities; proposals, submissions, and approvals, 69909–69913
Grants and cooperative agreements; availability, etc.:
Childhood lead poisoning reduction, 69913–69919
National Agricultural Workers Pesticide Safety Training and Education Program, 69919–69923
Superfund; response and remedial actions, proposed settlements, etc.:
Jehl Cooperage Co. Inc. Site, TN, 69923
Middlesboro, Tannery Site, KY, 69923–69924
Water pollution control:
Total maximum daily loads—
Barataria river basin, LA, 69924

Farm Credit System Insurance Corporation
NOTICES
Meetings; Sunshine Act, 69924–69925

Federal Aviation Administration
RULES
Airworthiness directives:
Bell Helicopter Textron Canada, 69810–69814
Rolls-Royce Corp., 69807–69809
PROPOSED RULES
Airworthiness directives:
BAE Systems (Operations) Ltd., 69834–69836
Boeing, 69844–69847 69838–69842
Bombardier, 69842–69844
British Aerospace, 69829–69831
Saab, 69836–69838

Federal Energy Regulatory Commission
NOTICES
Hydroelectric applications, 69907–69908
Meetings:
Malad Hydroelectric Project, ID, 69908
Off-the-record communications, 69908–69909
Applications, hearings, determinations, etc.:
Equitrans, L.P., 69903–69904

Gulf South Pipeline Co., LP, 69904
NorthPoint Energy Solutions, Inc., 69904–69905
Oasis Power Partners, LLC, 69905
Seafarer US Pipeline System, Inc., 69905–69906
Styrka Energy Master Fund LLC, 69906–69907
Transwestern Pipeline Co., LLC; correction, 69907

Federal Highway Administration
RULES
Engineering and traffic operations:
Uniform Traffic Control Devices Manual for streets and highways; 24-hour pharmacies; specific and general service signing, 69815–69819
NOTICES
Environmental statements; availability, etc.:
Fairfax County, VA, 69989–69990

Federal Maritime Commission
NOTICES
Agreements filed, etc., 69925

Federal Reserve System
NOTICES
Banks and bank holding companies:
Change in bank control, 69925
Permissible nonbanking activities, 69925
Reports and guidance documents; availability, etc.:
Payments system risk; policy statements, 69926–69940

Fish and Wildlife Service
PROPOSED RULES
Endangered and threatened species:
Critical habitat designations—
Munz's onion, 69878–69882

Food and Drug Administration
NOTICES
Agency information collection activities; proposals, submissions, and approvals, 69945

Forest Service
NOTICES
Environmental statements; notice of intent:
Caribou-Targhee National Forest, ID, 69883

General Services Administration
NOTICES
Agency information collection activities; proposals, submissions, and approvals, 69897, 69940–69941
Federal Acquisition Regulation (FAR):
Agency information collection activities; proposals, submissions, and approvals, 69897–69898

Grain Inspection, Packers and Stockyards Administration
NOTICES
Agency designation actions:
Indiana, 69883–69884
Minnesota, 69884
Various States, 69884–69885

Health and Human Services Department
See Aging Administration
See Centers for Disease Control and Prevention
See Food and Drug Administration
See Health Resources and Services Administration
See Substance Abuse and Mental Health Services Administration

Health Resources and Services Administration
NOTICES
National Vaccine Injury Compensation Program:
Vaccine Injury Table; inclusion of Hepatitis A vaccines, 69945–69946

Housing and Urban Development Department
PROPOSED RULES
Manufactured home construction and safety standards:
Manufacturing Housing Consensus Committee recommendations, 70015–70050

Industry and Security Bureau
RULES
Export administration regulations:
License conditions; licensee's responsibility to communicate
Correction, 69814–69815
NOTICES
Export privileges, actions affecting:
Technology Options (India) Pvt. Ltd. et al., 69887–69889

Interior Department
See Fish and Wildlife Service
See Land Management Bureau
See National Indian Gaming Commission
See Surface Mining Reclamation and Enforcement Office

Internal Revenue Service
RULES
Employment taxes and collection of income taxes at source:
Federal unemployment tax deposits; de minimis threshold, 69819–69820

International Trade Administration
NOTICES
Antidumping:
Heavy forged hand tools, finished or unfinished, with or without handles from—
China, 69892–69893
Antidumping and countervailing duties:
Administrative review requests, 69889–69891
Five-year (sunset) reviews—
Initiation of reviews, 69891–69892

International Trade Commission
NOTICES
Import investigations:
Absorbent garments, 69951
Carbon steel butt-weld pipe fittings from—
Various countries, 69952–69954
Granular polytetrafluoroethylene resin from—
Italy and Japan, 69954–69957
Hand trucks and certain parts from—
China, 69957

Justice Department
NOTICES
Pollution control; consent judgments:
Iowa Turkey Products, Inc., 69957
Wainwright Industries, Inc., 69958

Labor Department
See Mine Safety and Health Administration
NOTICES
Agency information collection activities; proposals, submissions, and approvals, 69958–69959

Land Management Bureau
NOTICES
Meetings:
Resource Advisory Councils—
Sierra Front-Northwestern Great Basin, 69948

Library of Congress
See Copyright Office, Library of Congress

Mine Safety and Health Administration
NOTICES
Agency information collection activities; proposals, submissions, and approvals, 69959–69960

National Aeronautics and Space Administration
NOTICES
Agency information collection activities; proposals, submissions, and approvals, 69896
Federal Acquisition Regulation (FAR):
Agency information collection activities; proposals, submissions, and approvals, 69897–69898

National Indian Gaming Commission
PROPOSED RULES
Management contract provisions:
Minimum internal control standards, 69847–69863

National Oceanic and Atmospheric Administration
RULES
Endangered and threatened species:
Sea turtle conservation requirements—
Shrimp trawling requirements; State waters of Alabama and Louisiana; limited tow times use as alternative to turtle excluder devices, 69826–69828
Fishery conservation and management:
Alaska; fisheries of Exclusive Economic Zone—
Pacific cod, 69828
NOTICES
Reports and guidance documents; availability, etc.:
Environmental information partnerships; public information products and services; policy statement, 69893

Natural Resources Conservation Service
NOTICES
Reports and guidance documents; availability, etc.:
National Handbook of Conservation Practices; conservation practice standards, new or revised, 69885–69886

Patent and Trademark Office
NOTICES
Agency information collection activities; proposals, submissions, and approvals, 69893–69894

Pension Benefit Guaranty Corporation
RULES
Single-employer plans:
Allocation of assets—
Valuation of benefits and assets; expected retirement age, 69821–69822
Benefits payable in terminated plans; disclosure to participants, 69820–69821

Personnel Management Office
RULES
Retirement:
Federal Employees Retirement System—
Death benefits and employee refunds, 69805–69807

Securities and Exchange Commission
NOTICES
Self-regulatory organizations; proposed rule changes:
American Stock Exchange LLC, 69960–69962
Boston Stock Exchange, Inc., 69962–69963
Chicago Board Options Exchange, Inc., 69964–69971
National Association of Securities Dealers, Inc., 69971–69973
New York Stock Exchange, Inc., 69974
Philadelphia Stock Exchange, Inc., 69974–69984

State Department
NOTICES
Grants and cooperative agreements; availability, etc.:
Eastern Europe and Independent States of Former Soviet Union Research and Training Program, 69984–69988
Meetings:
Public Diplomacy, U.S. Advisory Commission, 69988
Shipping Coordinating Committee, 69988–69989
Nonproliferation measures imposition:
Chinese and North Korean entities, 69989
Reports and guidance documents; availability, etc.:
Alternative fueled vehicle report (2004 FY), 69989

Substance Abuse and Mental Health Services Administration
NOTICES
Federal agency urine drug testing; certified laboratories meeting minimum standards, list, 69946–69948

Surface Mining Reclamation and Enforcement Office
NOTICES
Environmental statements; notice of intent:
Black Mesa and Kayenta coal mines, coal slurry pipeline, and c-aquifer water supply system; AZ and NV, 69949–69951

Surface Transportation Board
NOTICES
Rail carriers:
Waybill data; release for use, 69990

Transportation Department
See Federal Aviation Administration
See Federal Highway Administration
See Surface Transportation Board

Treasury Department
See Internal Revenue Service

Veterans Affairs Department
NOTICES
Agency information collection activities; proposals, submissions, and approvals, 69990–69994

Separate Parts In This Issue

Part II
Agriculture Department, Agricultural Marketing Service, 69995–70014

Part III
Housing and Urban Development Department, 70015–70050

Reader Aids
Consult the Reader Aids section at the end of this issue for phone numbers, online resources, finding aids, reminders, and notice of recently enacted public laws.

To subscribe to the Federal Register Table of Contents LISTSERV electronic mailing list, go to http://listserv.access.gpo.gov and select Online mailing list archives, FEDREGTOC-L, Join or leave the list (or change settings); then follow the instructions.

CFR PARTS AFFECTED IN THIS ISSUE

A cumulative list of the parts affected this month can be found in the Reader Aids section at the end of this issue.

5 CFR
841.....69805
842.....69805
843.....69805

7 CFR
Proposed Rules:
929.....69996

14 CFR
39 (2 documents) 69807, 69810
Proposed Rules:
39 (7 documents) 69829, 69832, 69834, 69836, 69838, 69842, 69844

15 CFR
750.....69814

23 CFR
655.....69815

24 CFR
Proposed Rules:
3280.....70016

25 CFR
Proposed Rules:
542.....69847

26 CFR
31.....69819

29 CFR
4011.....69820
4022.....69820
4044.....69821

37 CFR
253.....69822

40 CFR
52.....69823
Proposed Rules:
52.....69863
60.....69864
63.....69864

50 CFR
222.....69826
223.....69826
679.....69828
Proposed Rules:
17.....69878

Rules and Regulations

Federal Register

Vol. 69, No. 230

Wednesday, December 1, 2004

This section of the FEDERAL REGISTER contains regulatory documents having general applicability and legal effect, most of which are keyed to and codified in the Code of Federal Regulations, which is published under 50 titles pursuant to 44 U.S.C. 1510.

The Code of Federal Regulations is sold by the Superintendent of Documents. Prices of new books are listed in the first FEDERAL REGISTER issue of each week.

OFFICE OF PERSONNEL MANAGEMENT

5 CFR Parts 841, 842, and 843

RIN 3206–AK57

Federal Employees' Retirement System; Death Benefits and Employee Refunds

AGENCY: Office of Personnel Management.

ACTION: Interim rule.

SUMMARY: The Office of Personnel Management (OPM) is issuing an interim rule to revise the table of reduction factors for early commencing dates of survivor annuities for spouses of separated employees who die before the date on which they would be eligible for unreduced deferred annuities, and to revise the annuity factor for spouses of deceased employees who die in service when those spouses elect to receive the basic employee death benefit in 36 installments under the Federal Employees' Retirement System (FERS) Act of 1986. These rules are necessary to conform the tables to the previously published economic assumptions adopted by the Board of Actuaries.

DATES: This interim rule is effective October 1, 2004. We must receive your comments by January 3, 2005.

ADDRESSES: You may submit comments, identified by RIN number 3206–AK57, by any of the following methods:

- Federal eRulemaking Portal: *http://www.regulations.gov*. Follow the instructions for submitting comments.
- E-mail: *combox@opm.gov*. Include RIN number 3206–AK57 in the subject line of the message.
- Mail: Mary Ellen Wilson, Chief, Retirement Group, Office of Personnel Management, 1900 E Street NW., Washington, DC 20415–3200.

FOR FURTHER INFORMATION CONTACT: Patrick Jennings, (202) 606–0299.

SUPPLEMENTARY INFORMATION: On September 24, 2003, OPM published a notice in the **Federal Register** at 68 FR 55296 to revise the normal cost percentage under the Federal Employees' Retirement System (FERS) Act of 1986, Public Law 99–335, 100 Stat. 514, based on changed economic assumptions and demographic factors adopted by the Board of Actuaries of the Civil Service Retirement System. Those changed economic assumptions (principally the change in expected investment return from 6.75 percent to 6.25 percent) require corresponding changes in factors used to produce actuarially equivalent benefits when required by the FERS Act.

Section 843.309 of title 5, Code of Federal Regulations, regulates the payment of the basic employee death benefit. Under 5 U.S.C. 8442(b), the basic employee death benefit may be paid as a lump sum or as an equivalent benefit in 36 installments. These rules amend 5 CFR 843.309(b)(2) to conform the factor used to convert the lump sum to 36-installment payments with the revised economic assumptions.

Section 843.311 of title 5, Code of Federal Regulations, regulates the benefits for the survivors of separated employees under 5 U.S.C. 8442(c). This section provides a choice of benefits for eligible current and former spouses. If the current or former spouse is the person entitled to the unexpended balance under the order of precedence under 5 U.S.C. 8424, he or she may elect to receive the unexpended balance instead of an annuity. Alternatively, an eligible current or former spouse may elect to receive an annuity commencing on the day after the employee's death or on the deceased separated employee's 62nd birthday. If the annuity commences on the deceased separated employee's 62nd birthday, it equals 50 percent of the annuity that the separated employee would have received when he or she attained age 62. If the current or former spouse elects the earlier commencing date, the annuity is reduced using the factors in Appendix A to subpart C of part 843 to make the annuity actuarially equivalent to the annuity that he or she would have received if it commenced on the retiree's 62nd birthday. These rules amend that appendix to conform with the revised economic assumptions.

We are removing the table of normal cost percentages in Appendix A to subpart D of part 841 because it has no regulatory effect. Updated normal cost rates are published by OPM through a notice in the **Federal Register**. The table in Appendix A merely provides information about the historic rates that have already been published through **Federal Register** notices and is no longer required in the regulation.

We are removing the table of the National Average Wage Index in Appendix B to subpart C of part 843, and we are amending 5 CFR 842.504 and 843.308 to delete references to Appendix B. Since the Social Security Administration publishes a notice of the National Average Wage Index annually in the **Federal Register**, we are removing this information from the regulations. The National Average Wage Index is used in 5 CFR 842.504, to determine supplementary benefits payable to a retiree, and in 5 CFR 843.308, to determine supplementary benefits payable on the death of a retiree. Since Appendix B is removed, we are amending sections 842.504 and 843.308 to refer to the National Average Wage Index.

Waiver of General Notice of Proposed Rulemaking

Under section 553(b)(3)(B) and (d)(3) of title 5, United States Code, I find that good reason exists for waiving the general notice of proposed rulemaking and for making these amendments effective in less than 30 days. The amendments made by this rule are required by changes in economic assumptions that have already been published. Providing a comment period on the result of mathematical computations resulting from the changed economic assumptions is unnecessary, and to the extent that it would delay benefit payments is contrary to the public interest.

Executive Order 12866, Regulatory Review

This rule has been reviewed by the Office of Management and Budget in accordance with Executive Order 12866.

Regulatory Flexibility Act

I certify that this regulation will not have a significant economic impact on a substantial number of small entities because the regulation will only affect retirement payments to retired

employees, spouses, and former spouses.

List of Subjects in 5 CFR Parts 841, 842 and 843

Administrative practice and procedure, Air traffic controllers, Alimony, Claims, Disability benefits, Firefighters, Government employees, Income taxes, Intergovernmental relations, Law enforcement officers, Pensions, Retirement.

Kay Coles James,

Director.

■ For the reasons stated in the preamble, the Office of Personnel Management amends 5 CFR parts 841, 842 and 843 as follows:

PART 841—FEDERAL EMPLOYEES RETIREMENT SYSTEM—GENERAL ADMINISTRATION

■ 1. The authority citation for part 841 continues to read as follows:

Authority: 5 U.S.C. 8461; Sec. 841.108 also issued under 5 U.S.C. 552a; subpart D also issued under 5 U.S.C. 8423; Sec. 841.504 also issued under 5 U.S.C. 8422; Sec. 841.507 also issued under section 505 of Pub. L. 99–335; subpart J also issued under 5 U.S.C. 8469; Sec. 841.506 also issued under 5 U.S.C. 7701(b)(2); Sec. 841.508 also issued under section 505 of Pub. L. 99–335; Sec. 841.604 also issued under Title II, Pub. L. 106–265, 114 Stat. 780.

Subpart D—Government Costs

■ 2. Remove Appendix A to subpart D of part 841.

PART 842—FEDERAL EMPLOYEES RETIREMENT SYSTEM—BASIC ANNUITY

■ 3. The authority citation for part 842 is revised to read as follows:

Authority: 5 U.S.C. 8461(g); Secs. 842.104 and 842.106 also issued under 5 U.S.C. 8461(n); Sec. 842.104 also issued under sections 3 and 7(c) of Pub. L. 105–274, 112 Stat. 2419; Sec. 842.105 also issued under 5 U.S.C. 8402(c)(1) and 7701(b)(2); Sec. 842.106 also issued under section 102(e) of Pub. L. 104–8, 109 Stat. 102, as amended by section 153 of Pub. L. 104–134, 110 Stat. 1321–102; Sec. 842.107 also issued under sections 11202(f), 11232(e), and 11246(b) of Pub. L. 105–33, 111 Stat. 251, and section 7(b) of Pub. L. 105–274, 112 Stat. 2419; Sec. 842.108 also issued under section 7(e) of Pub. L. 105–274, 112 Stat. 2419; Sec. 842.213 also issued under 5 U.S.C. 8414(b)(1)(B) and section 1313(b)(5) of Pub. L. 107–296, 116 Stat. 2135; Secs. 842.604 and 842.611 also issued under 5 U.S.C. 8417; Sec. 842.607 also issued under 5 U.S.C. 8416 and 8417; Sec. 842.614 also issued under 5 U.S.C. 8419; Sec. 842.615 also issued under 5 U.S.C. 8418; Sec. 842.703 also issued under section 7001(a)(4) of Pub. L. 101–508, 104 Stat. 1388; Sec. 842.707 also issued under section 6001 of Pub. L. 100–203, 101 Stat. 1300; Sec. 842.708 also issued under section 4005 of Pub. L. 101–239, 103 Stat. 2106 and section 7001 of Pub. L. 101–508, 104 Stat. 1388; subpart H also issued under 5 U.S.C. 1104; Sec. 842.810 also issued under section 636 of Appendix C to Pub. L. 106–554 at 114 Stat. 2763A–164.

Subpart E—Annuity Supplement

■ 4. In § 842.504, revise paragraph (b)(2)(iv)(A) and paragraph (b)(2)(iv)(B)(2) to read as follows:

§ 842.504 Amount of annuity supplement.

* * * * *

(b) * * *

(2) * * *

(iv) * * *

(A) The National Average Wage Index (as determined by the Commissioner of the Social Security Administration) corresponding to that year, multiplied by

(B) * * *

(2) The denominator of which is the National Average Wage Index (as determined by the Commissioner of the Social Security Administration) corresponding to the retiree's first full year of service creditable under FERS.

PART 843—FEDERAL EMPLOYEES RETIREMENT SYSTEM—DEATH BENEFITS AND EMPLOYEE REFUNDS

■ 5. The authority citation for part 843 continues to read as follows:

Authority: 5 U.S.C. 8461; §§ 843.205, 843.208, and 843.209 also issued under 5 U.S.C. 8424; § 843.309 also issued under 5 U.S.C. 8442; § 843.406 also issued under 5 U.S.C. 8441.

Subpart C—Current and Former Spouse Benefits

■ 6. In §843.308, revise paragraph (b)(2)(iii)(B) to read as follows:§843.308 Supplementary benefits on death of a retiree.

* * * * *

(b) * * *

(2) * * *

(iii) * * *

(B) For each year after age 21 for which the retiree did not work under FERS, the retiree's wages are deemed to equal the National Average Wage Index (as determined by the Commissioner of the Social Security Administration) corresponding to that year, multiplied by the retiree's basic pay for his or her first full year of employment under FERS, divided by the National Average Wage Index corresponding to the retiree's first full year of employment under FERS.

* * * * *

■ 7. In §843.309, revise paragraph (b)(2) to read as follows:

§ 843.309 Basic employee death benefit.

* * * * *

(b) * * *

(2) For deaths occurring on or after October 1, 2004, 36 equal monthly installments of 3.03771 percent of the amount of the basic employee death benefit.

* * * * *

■ 8. Revise Appendix A to subpart C of part 843 to read as follows:

Appendix A to Subpart C of Part 843—Present Value Conversion Factors for Earlier Commencing Date of Annuities of Current and Former Spouses of Deceased Separated Employees

With at least 10, but less than 20 years of creditable service—

Age of separated employee at birthday before death	Multiplier
26	0.0600
27	.0640
28	.0696
29	.0738
30	.0810
31	.0865
32	.0925
33	.0995
34	.1067
35	.1155
36	.1238
37	.1334
38	.1426
39	.1551
40	.1667
41	.1800
42	.1940
43	.2097
44	.2260
45	.2437
46	.2634
47	.2855
48	.3082
49	.3343
50	.3615
51	.3922
52	.4251
53	.4616
54	.5018
55	.5455
56	.5936
57	.6452
58	.7033
59	.7669
60	.8369
61	.9144

With at least 20, but less than 30 years of creditable service—

Age of separated employee at birthday before death	Multiplier
36	0.1489
37	.1601
38	.1714
39	.1858
40	.2001

Age of separated employee at birthday before death	Multiplier	Age of separated employee at birthday before death	Multiplier	Age of separated employee at birthday before death	Multiplier
41	.2161	49	.4005	57	.7717
42	.2328	50	.4332	58	.8407
43	.2516	51	.4698	59	.9165
44	.2709	52	.5090		
45	.2922	53	.5527		
46	.3159	54	.6005		
47	.3423	55	.6526		
48	.3695	56	.7098		

With at least 30 years of creditable service—

Age of separated employee at birthday before death	Multiplier by separated employee's year of birth		
	After 1966	From 1950 through 1966	Before 1950
46	0.4110	0.4477	0.4872
47	.4449	.4844	.5270
48	.4805	.5231	.5691
49	.5204	.5666	.6162
50	.5630	.6130	.6667
51	.6101	.6641	.7221
52	.6609	.7194	.7822
53	.7172	.7805	.8486
54	.7787	.8472	.9209
55	.8458	.9202	1.0000
56	.9194	1.0000	1.0000

■ 9. Remove Appendix B to subpart C of part 843.

[FR Doc. 04–26440 Filed 11–30–04; 8:45 am]

BILLING CODE 6325–38–P

DEPARTMENT OF TRANSPORTATION

Federal Aviation Administration

14 CFR Part 39

[Docket No. 2004–NE–10–AD; Amendment 39–13885; AD 2004–24–09]

RIN 2120–AA64

Airworthiness Directives; Rolls-Royce Corporation (Formerly Allison Engine Company, Allison Gas Turbine Division, and Detroit Diesel Allison) (RRC) 250–B and 250–C Series Turboshaft and Turboprop Engines

AGENCY: Federal Aviation Administration (FAA), DOT.

ACTION: Final rule.

SUMMARY: The FAA is adopting a new airworthiness directive (AD) for certain RRC 250–B and 250–C series turboshaft and turboprop engines. This AD requires a onetime inspection of the fuel nozzle screen for contamination, and if contamination is found, inspection and cleaning of the entire aircraft fuel system before further flight. This AD also requires replacing the fuel nozzle with a new design fuel nozzle, at the next fuel nozzle overhaul or by June 30, 2006, whichever occurs first. This AD results from 10 reports of engine power loss with accompanying collapse of the fuel nozzle screen, due to fuel contamination. We are issuing this AD to minimize the risk of sudden loss of engine power and uncommanded shutdown of the engine due to fuel contamination and collapse of the screen in the fuel nozzle.

DATES: This AD becomes effective January 5, 2005.

ADDRESSES: You can get the service information identified in this proposed AD from Rolls-Royce Corporation, P.O. Box 420, Indianapolis, IN 46206–0420; telephone (317) 230–6400; fax (317) 230–4243.

You may examine the AD docket, by appointment, at the FAA, New England Region, Office of the Regional Counsel, 12 New England Executive Park, Burlington, MA.

FOR FURTHER INFORMATION CONTACT: John Tallarovic, Aerospace Engineer, Chicago Aircraft Certification Office, FAA, 2300 East Devon Avenue, Des Plaines, IL 60018–4696; telephone (847) 294–8180; fax (847) 294–7834.

SUPPLEMENTARY INFORMATION: The FAA proposed to amend 14 CFR part 39 with a proposed airworthiness directive (AD). The proposed AD applies to certain RRC 250–B and 250–C series turboshaft and turboprop engines. We published the proposed AD in the **Federal Register** on May 7, 2004 (69 FR 25501). That action proposed to require:

- A onetime inspection of the fuel nozzle screen for contamination, within 150 operating hours after the effective date of the proposed AD; and
- Inspection and cleaning of the entire aircraft fuel system before further flight, if contamination is found; and
- Replacement of the fuel nozzle with a serviceable (new design) fuel nozzle, at the next fuel nozzle overhaul or by June 30, 2006, whichever occurs first.

Examining the AD Docket

You may examine the AD Docket (including any comments and service information), by appointment, between 8 a.m. and 4:30 p.m., Monday through Friday, except Federal holidays. See **ADDRESSES** for the location.

Comments

We provided the public the opportunity to participate in the development of this AD. We have considered the comments received.

Request To Add Sikorsky Model S–76A Helicopter to the Applicability

One commenter asks us to add the Sikorsky Model S–76A helicopter to the Applicability. The commenter states that the S–76A helicopter uses RRC model 250–C30 and 250–C30S engines. We agree. Although this AD is applicable to the RRC model 250–C30 and 250–C30S engines, we list airframes that might use the engines as an aid to the operators. We added the Sikorsky model S–76A helicopters to the ''used on but not limited to'' sentence in paragraph (c) of the final rule.

Request To Expand the Discussion Section of the Preamble

One commenter asks us to expand the background information in the

Discussion section regarding the recent history of fuel nozzle contamination on the RCC Model 250 engines. The commenter feels the change will include more details to the public regarding the actual issues leading to the collapsed screen events and the potential risk to their specific operations. While we agree more details in the notice of proposed rulemaking (NPRM) could have been helpful to the public, that section is not included in a final rule. We did not change the final rule to add more details about the events.

Request To Change the Unsafe Condition Statement

The same commenter asks us to change the unsafe condition statement in the Summary section of the preamble and in paragraph (d) of the regulatory text from ''to prevent * * * engine'' to ''to minimize the risk of * * * engine.'' The commenter wants to clarify that installing this new fuel nozzle with the modified screen will provide additional resistance to collapse of the screen when the screen is subjected to contaminated conditions. However, the modification cannot prevent or eliminate the risk of power loss when operating on aircraft with contaminated fuel. We agree. We changed the last sentence in the Summary section of the preamble and the last sentence in paragraph (d) of the regulatory text in the final rule to ''to minimize the risk of * * * engine.''

Suggestions That the AD Is Not Needed

Two commenters feel that we do not need to issue an AD to address the unsafe condition. One commenter suggests that RRC revise the applicable maintenance manuals to reduce the inspection interval for the fuel nozzle screens from the current 1,500 hour interval to a 500 hour interval. The commenter feels that the aircraft involved in the incidents might not have had maintenance performed using the appropriate maintenance publication, were not fueled from a known good source, or did not maintain their fuel system filters that are upstream of the fuel nozzle. We do not agree. As we stated in the NPRM, there are 10 instances where the affected engines experienced a power loss from contaminated fuel and collapse of the fuel nozzle screen. We feel that the onetime inspection is necessary to find any engines in service that have a contaminated fuel nozzle screen and impending collapse. The RRC Operation and Maintenance manual requires scheduled inspections at 300-hour intervals when the fuel system does not have an aircraft fuel filter. The manual requires scheduled inspections at 1,500-hour intervals when the fuel system has an aircraft fuel filter. If we find the inspection intervals in the RRC manual are too long, we might propose changing those intervals in the future. We did not change the final rule.

Another commenter feels that we don't need to issue an AD if operators maintain a clean fuel system, have a clean fuel supply system, and have methods in place to make sure they only use clean fuel. We do not agree. If there were always a clean supply of fuel, filters, screens, and nozzles, contaminants would never block them. Unfortunately, even with long-standing warnings by engine manufacturers about using contaminated fuel, our recent Special Airworthiness Information Bulletin on the matter, and all of the effort that goes into ensuring a clean fuel supply, it is not possible to prevent contamination entirely. Tests show the new design fuel nozzle screens are more resistant to sudden collapse when contaminated. Fuel flow through the new fuel nozzle screen will decrease gradually as the screen becomes contaminated. The decreased fuel flow will give the pilot more time to notice the problem and take action. When contaminated, the old design of fuel nozzle screen could collapse without warning and cause an abrupt reduction in fuel flow. We did not change the final rule.

Request To Require Changing the Rotorcraft Flight Manuals

One commenter asks us to require changing the flight manuals, for the rotorcraft that use the affected engines, to direct the pilot to land the rotorcraft immediately when the fuel system goes into bypass mode. The commenter states the flight manuals for some rotorcraft direct operators to land immediately after entering bypass mode. Other flight manuals allow continued flight and only require addressing the issue before the next flight. We do not agree. This AD only addresses engine design issues. This is not the appropriate vehicle to change the rotorcraft flight manuals. We forwarded the suggested changes to the responsible FAA rotorcraft certification offices.

Request To Lower the Total Costs of Compliance

One commenter asks us to lower the total Cost of Compliance from about $12,650,000 to about $2,760,000. The commenter states that an operator can buy the new fuel nozzle screens for about $81 each, and install them for about an additional $276 each. We do not agree. The new fuel nozzle screen has additional mesh material to make it more resistant to collapse than the original screen. This design difference may cause a difference in how fuel flows through the screen and nozzle spray tip. The OEM has developed and uses a procedure to check the fuel nozzle for proper operation after installing, which is why the AD is structured as it is. At this time, the only approved method to comply with the AD is to replace the existing nozzle assembly with an assembly that does not have a part number listed in the AD. We based the costs we used in our analysis on the cost of a new fuel nozzle assembly and the cost of a fuel nozzle assembly reworked to the new configuration during overhaul of the nozzle assembly. If an operator develops a method of complying with the AD that is less expensive and maintains an equivalent level of safety using FAA-approved screens, the operator may send that method to us as a request for an alternative method of compliance under the procedures found in 14 CFR 39.19. We did not change the final rule.

Conclusion

We have carefully reviewed the available data, including the comments received, and determined that air safety and the public interest require adopting the AD with the changes described previously. We have determined that these changes will neither increase the economic burden on any operator nor increase the scope of the AD.

Costs of Compliance

There are about 15,000 RRC 250–B and 250–C series turboshaft and turboprop engines of the affected design in the worldwide fleet. We estimate that 10,000 engines installed on aircraft of U.S. registry will be affected by this AD. We also estimate that it will take about 1 work hour per engine to perform the actions, and that the average labor rate is $65 per work hour. In addition, operators can either replace the fuel nozzle with a new one at a cost of about $2,595 or have the existing nozzle overhauled at a cost of about $850. We estimate that about 80% of the fuel nozzles will be overhauled and 20% will be replaced with a new nozzle. Therefore, we estimate that the required parts would cost, on average, about $1,200 per engine. Based on these figures, we estimate the total cost of the AD to U.S. operators to be $12,650,000.

Authority for This Rulemaking

Title 49 of the United States Code specifies the FAA's authority to issue rules on aviation safety. Subtitle I, section 106, describes the authority of

the FAA Administrator. Subtitle VII, Aviation Programs, describes in more detail the scope of the Agency's authority.

We are issuing this rulemaking under the authority described in Subtitle VII, part A, subpart III, section 44701, ''General requirements.'' Under that section, Congress charges the FAA with promoting safe flight of civil aircraft in air commerce by prescribing regulations for practices, methods, and procedures the Administrator finds necessary for safety in air commerce. This regulation is within the scope of that authority because it addresses an unsafe condition that is likely to exist or develop on products identified in this rulemaking action.

Regulatory Findings

We have determined that this AD will not have federalism implications under Executive Order 13132. This AD will not have a substantial direct effect on the States, on the relationship between the National Government and the States, or on the distribution of power and responsibilities among the various levels of government.

For the reasons discussed above, I certify that this AD:

(1) Is not a ''significant regulatory action'' under Executive Order 12866;

(2) Is not a ''significant rule'' under DOT Regulatory Policies and Procedures (44 FR 11034, February 26, 1979); and

(3) Will not have a significant economic impact, positive or negative, on a substantial number of small entities under the criteria of the Regulatory Flexibility Act.

We prepared a summary of the costs to comply with this AD and placed it in the AD Docket. You may get a copy of this summary by sending a request to us at the address listed under **ADDRESSES.** Include ''AD Docket No. 2004–NE–10–AD'' in your request.

List of Subjects in 14 CFR Part 39

Air transportation, Aircraft, Aviation safety, Safety.

Adoption of the Amendment

■ Accordingly, under the authority delegated to me by the Administrator, the Federal Aviation Administration amends 14 CFR part 39 as follows:

PART 39—AIRWORTHINESS DIRECTIVES

■ 1. The authority citation for part 39 continues to read as follows:

Authority: 49 U.S.C. 106(g), 40113, 44701.

§ 39.13 [Amended]

■ 2. The FAA amends § 39.13 by adding the following new airworthiness directive (AD):

2004–24–09 Rolls-Royce Corporation: Amendment 39–13885. Docket No. 2004–NE–10–AD.

Effective Date

(a) This airworthiness directive (AD) becomes effective January 5, 2005.

Affected ADs

(b) None.

Applicability

(c) This AD applies to Rolls-Royce Corporation (formerly Allison Engine Company, Allison Gas Turbine Division, and Detroit Diesel Allison) (RRC) 250–B and 250–C series turboshaft and turboprop engines in the following Table 1:

TABLE 1.—250–B AND 250–C SERIES TURBOSHAFT AND TURBOPROP ENGINES AFFECTED

–B15A	–B15E	–B15G	–B17	–B17B	–B17C
–B17D	–B17E	–B17F	–B17F/1	–B17F/2	–C18
–C18A	–C18B	–C18C	–C20	–C20B	–C20C
–C20F	–C20J	–C20R	–C20R/1	–C20R/2	–C20R/4
–C20S	–C20W	–C28	–C28B	–C28C	–C30
–C30G	–C30G/2	–C30M	–C30P	–C30R	–C30R/1
–C30R/3	–C30R/3M	–C30S	–C30U	–C40B	–C47B
–C47M					

These engines are installed on, but not limited to, Agusta Models A109, A109A, A109AII, and A109C; Bell Helicopter Textron Models 47, 206A, 206B, 206L, 206L–1, 206L–3, 206L–4, 407, and 430; B–N Group Models BN–2T and BN–2T–4R; Enstrom Models TH28, 480; and 480B; Eurocopter Canada Limited Model BO 105 LS A–3; Eurocopter France Models AS355E, AS355F, AS355I, and AS355F2; Eurocopter Deutschland Models BO–105A, BO–105C, BO–105S, and BO–105LS A–1; Hiller Aviation Model FH–1100; McDonnell Douglas 369D, 369E, 369F, 369H, 369HE, 369HM, 369HS, 369FF, and 500N; Schweizer TH269D; SIAI Marchetti s.r.l. Models SF600 and SF600A; and Sikorsky S–76A helicopters and airplanes.

Unsafe Condition

(d) This AD results from 10 reports of engine power loss with accompanying collapse of the screen in the fuel nozzle, due to fuel contamination. We are issuing this AD to minimize the risk of sudden loss of engine power and uncommanded shutdown of the engine due to fuel contamination and collapse of the screen in the fuel nozzle.

Compliance

(e) You are responsible for having the actions required by this AD performed within the compliance times specified unless the actions have already been done.

(f) Perform a onetime inspection of the fuel nozzle screen for contamination, within 150 operating hours after the effective date of this AD.

(g) Inspect and clean the entire aircraft fuel system before further flight if there is any contamination on the screen.

(h) Remove from service fuel nozzles, part numbers (P/Ns) 6890917, 6899001, and 6852020, and replace with a serviceable fuel nozzle, at the next fuel nozzle overhaul after the effective date of this AD, or by June 30, 2006, whichever occurs first.

Definition

(i) For the purposes of this AD, a serviceable fuel nozzle is defined as a nozzle that has a P/N not specified in, or addressed by, this AD.

Alternative Methods of Compliance

(j) The Manager, Chicago Aircraft Certification Office, has the authority to approve alternative methods of compliance for this AD if requested using the procedures found in 14 CFR 39.19.

Related Information

(k) Information related to the subject of this AD can be found in Rolls-Royce Corporation Alert Commercial Engine Bulletin, with the identification numbers of CEB–A–313, CEB–A–1394, CEB–A–73–2075, CEB—–A–73–3118, CEB–A–73–4056, CEB–A–73–5029, CEB–A–73–6041, TP CEB–A–183, TP CEB–A–1336, and TP CEB–A–73–2032, dated September 4, 2003.

Material Incorporated by Reference

(l) None.

Issued in Burlington, Massachusetts, on November 22, 2004.

Francis A. Favara,

Acting Manager, Engine and Propeller Directorate, Aircraft Certification Service.

[FR Doc. 04–26424 Filed 11–30–04; 8:45 am]

BILLING CODE 4910–13–P

DEPARTMENT OF TRANSPORTATION

Federal Aviation Administration

14 CFR Part 39

[Docket No. 2004–SW–12–AD; Amendment 39–13884; AD 2004–24–08]

RIN 2120–AA64

Airworthiness Directives; Bell Helicopter Textron Canada Model 206A, B, L, L–1, L–3, and L–4 Helicopters

AGENCY: Federal Aviation Administration, DOT.

ACTION: Final rule; request for comments.

SUMMARY: This amendment adopts a new airworthiness directive (AD) for the specified Bell Helicopter Textron Canada (BHTC) model helicopters. This action requires an initial inspection and, at specified intervals, certain repetitive checks and inspections of the tail rotor blade (blade) for a deformation, a crack, and a bent or deformed tail rotor weight (weight). Also, this action requires, before further flight, replacing each blade with an airworthy blade if a deformation, a crack, or a bent or deformed weight is found. This amendment is prompted by three reports of skin cracks originating near the blade trailing edge balance weight. This condition, if not detected, could result in blade failure and subsequent loss of control of the helicopter.

DATES: Effective December 16, 2004.

Comments for inclusion in the Rules Docket must be received on or before January 31, 2005.

ADDRESSES: Submit comments in triplicate to the Federal Aviation Administration (FAA), Office of the Regional Counsel, Southwest Region, Attention: Rules Docket No. 2004–SW–12–AD, 2601 Meacham Blvd., Room 663, Fort Worth, Texas 76137. You may also send comments electronically to the Rules Docket at the following address: *9-asw-adcomments@faa.gov.*

FOR FURTHER INFORMATION CONTACT: Sharon Miles, Aviation Safety Engineer, FAA, Rotorcraft Directorate, Regulations and Guidance Group, Fort Worth, Texas 76193–0111, telephone (817) 222–5122, fax (817) 222–5961.

SUPPLEMENTARY INFORMATION: This amendment adopts a new AD for the specified BHTC model helicopters. This action requires an initial inspection and certain repetitive checks and inspections of the blade, at specified intervals, for a deformation, a crack, and a bent or deformed weight. Also, this action requires, before further flight, replacing each blade with an airworthy blade if a deformation, a crack, or a bent or deformed weight is found. This amendment is prompted by three reports of skin cracks originating near the blade trailing edge balance weight. In two reports, a loss of the weight and a strip of material along the trailing edge led to an imbalance and fracture of three of the four tail rotor gearbox attachment bolts. In one of these incidents the gearbox shifted resulting in failure of the drive shaft and loss of yaw control. This condition, if not detected, could result in blade failure and subsequent loss of control of the helicopter.

BHTC has issued Alert Service Bulletin No. 206–04–100 for Model 206A and B and No. 206L–04–127 for Model 206L series helicopters, both Revision B, both dated May 28, 2004. These service bulletins specify checking and inspecting the blades for a deformation, a crack, and a bent or deformed weight and a one-time inspection by Rotor Blades Inc. in Louisiana, USA, and if the blades pass the one-time inspection, adding a ''V'' at the end of the serial number. The service bulletins also specify replacing any blade with a deformation, a crack, or bent or deformed weight.

Transport Canada, the airworthiness authority for Canada, notified the FAA that an unsafe condition may exist on these helicopter models. Transport Canada advises of three reports of skin cracks originating near the blade trailing edge balance weight. Two of the occurrences caused a loss of the weight and a strip of material along the trailing edge leading to an imbalance, which caused the fracture of three of the four tail rotor gearbox attachments. One of these occurrences resulted in the gearbox shifting that caused failure of the drive shaft and resulting loss of yaw control. Transport Canada classified the alert service bulletins as mandatory and issued AD No. CF–2004–05R1, dated June 28, 2004, to ensure the continued airworthiness of these helicopters in Canada.

These helicopter models are manufactured in Canada and are type certificated for operation in the United States under the provisions of 14 CFR 21.29 and the applicable bilateral agreement. Pursuant to the applicable bilateral agreement, Transport Canada has kept the FAA informed of the situation described above. The FAA has examined the findings of Transport Canada, reviewed all available information, and determined that AD action is necessary for products of these type designs that are certificated for operation in the United States.

This unsafe condition is likely to exist or develop on other helicopters of the same type designs registered in the United States. Therefore, the FAA is issuing this AD to detect a blade with a deformation, a crack, or a bent or deformed weight and to prevent blade failure and subsequent loss of control of the helicopter. This AD requires the following for the specified BHTC helicopters with certain blade part numbers and serial numbers:

- Before further flight, unless accomplished previously, and before installing any blade with an affected part number and serial number, cleaning the blade. Then, using a 10X or higher magnifying glass, inspecting both sides of each blade for a deformation, a crack, and a bent or deformed weight.
- Thereafter, cleaning both sides of each blade and using a 10X or higher magnifying glass, inspecting for a deformation, a crack, and a bent or deformed weight as follows:
  - At intervals not to exceed 12 hours time-in-service (TIS), or
  - At intervals not to exceed 24 hours TIS and checking both sides of each blade for a deformation, a crack, and a bent or deformed weight at intervals not to exceed 3 hours TIS between inspections. An owner/operator (pilot) may perform the 3-hour TIS check for deformed or cracked blades and for bent or deformed weights. Pilots may perform these checks because they require no tools, can be done by observation, and can be done equally well by a pilot or a mechanic. However, the pilot must enter compliance with these requirements into the helicopter maintenance records by following 14 CFR 43.11 and 91.417(a)(2)(v).
- Before further flight, replacing each blade with an airworthy blade if you find a deformation, a crack, or a bent or deformed weight.

The short compliance time involved is required because the previously described critical unsafe condition can adversely affect the controllability and structural integrity of the helicopter. Therefore, inspecting the blade, for a deformation, a crack, and a bent or deformed weight is required before further flight and at short specified time intervals, and this AD must be issued immediately.

Since a situation exists that requires the immediate adoption of this regulation, it is found that notice and opportunity for prior public comment hereon are impracticable, and that good cause exists for making this amendment effective in less than 30 days.

The FAA estimates that this AD will:

- Affect 2194 helicopters.

• Take about ¼ work hour for a blade check or inspection and 3 work hours to replace one blade at an average labor rate of $65 per work hour.

• Required parts will cost about $5,848 per helicopter. (The service bulletin states that warranty credit will be given based on hour usage on the blade with remaining life hours and other restrictions.) Based on these figures, the total estimated cost impact of the AD on U.S. operators is $21,315,807, assuming 226 checks or inspections and replacing one blade on each helicopter in the fleet.

Comments Invited

Although this action is in the form of a final rule that involves requirements affecting flight safety and, thus, was not preceded by notice and an opportunity for public comment, comments are invited on this rule. Interested persons are invited to comment on this rule by submitting such written data, views, or arguments as they may desire. Communications should identify the Rules Docket number and be submitted in triplicate to the address specified under the caption **ADDRESSES**. All communications received on or before the closing date for comments will be considered, and this rule may be amended in light of the comments received. Factual information that supports the commenter's ideas and suggestions is extremely helpful in evaluating the effectiveness of the AD action and determining whether additional rulemaking action would be needed.

Comments are specifically invited on the overall regulatory, economic, environmental, and energy aspects of the rule that might suggest a need to modify the rule. All comments submitted will be available in the Rules Docket for examination by interested persons. A report that summarizes each FAA-public contact concerned with the substance of this AD will be filed in the Rules Docket.

Commenters wishing the FAA to acknowledge receipt of their mailed comments submitted in response to this rule must submit a self-addressed, stamped postcard on which the following statement is made: ''Comments to Docket No. 2004–SW–12–AD.'' The postcard will be date stamped and returned to the commenter.

The regulations adopted herein will not have a substantial direct effect on the States, on the relationship between the national Government and the States, or on the distribution of power and responsibilities among the various levels of government. Therefore, it is determined that this final rule does not have federalism implications under Executive Order 13132.

The FAA has determined that this regulation is an emergency regulation that must be issued immediately to correct an unsafe condition in aircraft, and that it is not a ''significant regulatory action'' under Executive Order 12866. It has been determined further that this action involves an emergency regulation under DOT Regulatory Policies and Procedures (44 FR 11034, February 26, 1979). If it is determined that this emergency regulation otherwise would be significant under DOT Regulatory Policies and Procedures, a final economic evaluation will be prepared and placed in the Rules Docket. A copy of it, if filed, may be obtained from the Rules Docket at the location provided under the caption **ADDRESSES**.

List of Subjects in 14 CFR Part 39

Air transportation, Aircraft, Aviation safety, Safety.

Adoption of the Amendment

Accordingly, pursuant to the authority delegated to me by the Administrator, the Federal Aviation Administration amends part 39 of the Federal Aviation Regulations (14 CFR part 39) as follows:

PART 39—AIRWORTHINESS DIRECTIVES

■ 1. The authority citation for part 39 continues to read as follows:

Authority: 49 U.S.C. 106(g), 40113, 44701.

§ 39.13 [Amended]

■ 2. Section 39.13 is amended by adding a new airworthiness directive to read as follows:

2004–24–08 Bell Helicopter Textron Canada: Amendment 39–13884. Docket No. 2004–SW–12–AD.

Applicability: Model 206A, B, L, L–1, L–3, and L–4 helicopters, with a tail rotor blade (blade) with the following part number (P/N) and serial number (S/N) installed, certificated in any category.

Model 206A & B; Blade, P/N 206–016–201–133, S/N with prefix ''CS'' and no ''V'' suffix	Model 206A, B, L, L–1, L–3, & L–4, Blade, P/N 206–016–201–131, S/N with prefix ''CS'' and no ''V'' suffix	
1381 through 1442	7000 through 7018	10174 through 10218.
1492 through 1517	7020 through 7043	10220.
1520 through 1542	7045 through 7050	10232.
1550	7052 through 7132	10235.
1556	7134 through 7246	10237 through 10241.
1560	7248 through 7270	10244.
1562	7272 through 7277	10245.
1564 through 1567	7279 through 7339	10248.
1569 through 1606	7342 through 7368	10250 through 10264.
1609	7784	10266 through 10268.
1611	7786	10270 through 10274.
1612	7788	10276 through 10278.
1614 through 1631	7790 through 7796	10280 through 10282.
1633 through 1675	7798 through 7819	10284 through 10292.
1677	7821 through 7833	10296.
1678	7835 through 7839	10300 through 10330.
1680 through 1682	7841 through 8001	10332.
1684 through 1787	8003 through 8026	10333.
1789 through 1803	8029 through 8061	10335 through 10347.
1810 through 1812	8064 through 8117	10349.
1814	8119	10351 through 10359.
1816	8121 through 8139	10363 through 10365.

Model 206A & B; Blade, P/N 206–016–201–133, S/N with prefix ''CS'' and no ''V'' suffix	Model 206A, B, L, L–1, L–3, & L–4, Blade, P/N 206–016–201–131, S/N with prefix ''CS'' and no ''V'' suffix	
1820	8142 through 8176	10367.
1823 through 1831	8178 through 8262	10373.
1834 through 1836	8264 through 8294	10374.
1838	8298 through 8368	10377 through 10385.
1840 through 1844	8370 through 8375	10387 through 10408.
1846	8378 through 8416	10410.
1848 through 1882	8419	10414 through 10417.
1884 through 1887	8421	10419 through 10427.
1889 through 1893	8425 through 8428	10430.
1896 through 1898	8430 through 8438	10432.
1900	8440	10437.
1904	8441	10438.
1909 through 1912	8443	10442 through 10445.
1915	8445 through 8447	10458 through 10466.
1916	8449 through 8606	10469.
1919 through 1921	8608 through 8622	10470.
1924	8624 through 8626	10474.
1928 through 1931	8628 through 8632	10476 through 10478.
1933	8635 through 8653	10480 through 10487.
1934 through 1939	8655 through 8686	10489 through 10491.
1943	8690	10493 through 10495.
1945	8692 through 8700	10497 through 10503.
1947	8703 through 8715	10505 through 10588.
1948	8717 through 8722	10591 through 10606.
1952 through 1957	8724 through 8742	10608 through 10610.
1960	8745 through 8828	10612 through 10620.
1962 through 1965	8830 through 8835	10623.
	8838 through 8840	10624.
	8842 through 8881	10631 through 10655.
	8883 through 9032	10657 through 10669.
	9034 through 9139	10672.
	9141 through 9198	10673.
	9200	10676 through 10678.
	9202 through 9302	10680 through 10683.
	9304 through 9339	10685.
	9341 through 9371	10687.
	9373 through 9411	10689 through 10702.
	9413	10707.
	9415 through 9417	10712.
	9419 through 9496	10715.
	9498 through 9585	10730.
	9587 through 9594	10732 through 10734.
	9596 through 9618	10736.
	9621 through 9629	10738.
	9632 through 9642	10739.
	9645 through 9651	10746.
	9653 through 9673	10750.
	9675 through 9707	10756.
	9709 through 9724	10760.
	9727 through 9731	10761.
	9733 through 9735	10765.
	9737 through 9739	10770.
	9741 through 9748	10774 through 10776.
	9751 through 9785	10778.
	9787	10781.
	9788	10783 through 10785.
	9790 through 9792	10792.
	9795 through 9847	10794.
	9849 through 9928	10798.
	9930 through 9937	10799.
	9940 through 9942	10806 through 10808.
	9944 through 9952	10811.
	9955 through 9972	10814 through 10822.
	9974 through 9989	10824.
	9991 through 9995	10825.
	9997 through 10004	10829.
	10006 through 10009	10831.
	10011	10917.

Model 206A & B; Blade, P/N 206–016–201–133, S/N with prefix ''CS'' and no ''V'' suffix	Model 206A, B, L, L–1, L–3, & L–4, Blade, P/N 206–016–201–131, S/N with prefix ''CS'' and no ''V'' suffix	
	10013 through 10018	10923.
	10021 through 10030	10931.
	10034	10936.
	10036 through 10057	10937.
	10061 through 10082	10940.
	10090 through 10092	10943.
	10094 through 10100	10945.
	10116	10947.
	10119	10948.
	10121	10964.
	10123 through 10134	10965.
	10136 through 10140	10973.
	10142 through 10144	10982.
	10146 through 10172	10985.
		10986.

Compliance: Required as indicated.

To prevent blade failure and subsequent loss of control of the helicopter, do the following:

(a) Before further flight, unless accomplished previously, and before installing any blade with a P/N and S/N listed in the applicability section of this AD, clean the blade. Using a 10X or higher magnifying glass, inspect both sides of each blade for a deformation, a crack, and a bent or deformed weight in the area shown in Figure 1 of this AD.

Note 1: Paint irregularities on the blade may indicate a crack.

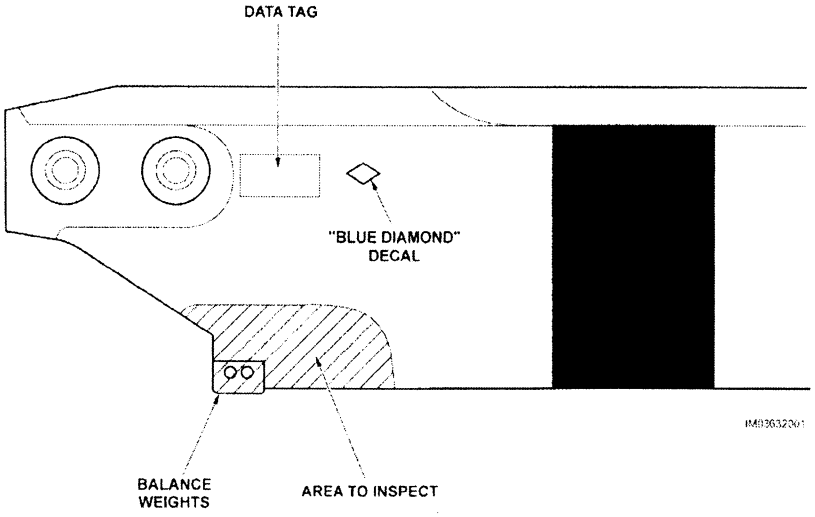

Figure 1. Tail rotor blade inspection.

(b) After doing paragraph (a) of this AD, at the following intervals, clean both sides of each blade and do either paragraph (1) or (2) as follows:

(1) At intervals not to exceed 12 hours time-in-service (TIS), using a 10X or higher magnifying glass, inspect both sides of each blade for a deformation, a crack, and a bent or deformed weight in the area shown in Figure 1 of this AD, or

(2) Inspect and check both sides of each blade for a deformation, a crack, and a bent or deformed weight in the area shown in Figure 1 of this AD as follows:

(i) Using a 10X or higher magnifying glass, inspect at intervals not to exceed 24 hours TIS, and

(ii) Check at intervals not to exceed 3 hours TIS between the inspections required by paragraph (b)(2)(i) of this AD. An owner/operator (pilot), holding at least a private pilot certificate, may perform this visual check and must enter compliance with this paragraph into the helicopter maintenance records by following 14 CFR sections 43.11 and 91.417(a)(2)(v).

(c) Before further flight, replace any blade that has a deformation, a crack, or a bent or deformed weight with an airworthy blade.

Note 2: Bell Helicopter Textron Alert Service Bulletin No. 206–04–100 for Model 206A and B and No. 206L–04–127 for Model 206L series, both Revision B, both dated May 28, 2004, pertain to the subject of this AD.

(d) To request a different method of compliance or a different compliance time for this AD, follow the procedures in 14 CFR 39.19. Contact the Safety Management Group, Rotorcraft Directorate, FAA, for information about previously approved alternative methods of compliance.

(e) This amendment becomes effective on December 16, 2004.

Note 3: The subject of this AD is addressed in Transport Canada (Canada) AD No. CF–2004–05R1, dated June 28, 2004.

Issued in Fort Worth, Texas, on November 22, 2004.

Kim Smith,

Acting Manager, Rotorcraft Directorate, Aircraft Certification Service.

[FR Doc. 04–26425 Filed 11–30–04; 8:45 am]

BILLING CODE 4910–13–P

DEPARTMENT OF COMMERCE

Bureau of Industry and Security

15 CFR Part 750

[Docket No. 041001275–4331–02]

RIN 0694–AD05

Correction to Revision of Licensee's Responsibility To Communicate License Conditions

AGENCY: Bureau of Industry and Security, Commerce.

ACTION: Interim rule; Correction.

SUMMARY: The Bureau of Industry and Security is correcting an interim rule that appeared in the **Federal Register** of November 23, 2004 (67 FR 68076). The rule amended the regulations to require licensees to communicate in writing specific licensing conditions. This rule amends the Export Administration Regulations (EAR) by correcting an error by inserting regulatory text inadvertently omitted.

DATES: This correction is effective: November 23, 2004.

FOR FURTHER INFORMATION CONTACT: Jeffery Lynch, Regulatory Policy Division, Office of Exporter Services, Bureau of Industry and Security; e-mail: *jlynch@bis.doc.gov.*

SUPPLEMENTARY INFORMATION: This rule amends the document appearing on page 68077 of the **Federal Register** of Thursday, November 23, 2004. BIS amends the rule to correct an error in the interim rule requiring licensees to communicate in writing specific license conditions to the parties to whom the license conditions apply.

§ 750.7 [Corrected]

1. On page 68077 of the **Federal Register,** in the second column, amendment number 3 to section 750.7 is corrected to read as follows: ''It is the licensee's responsibility to communicate in writing the specific license conditions to the parties to whom those conditions apply.''

Rulemaking Requirements

1. This rule has been determined to be not significant for purposes of E.O. 12866.

2. Notwithstanding any other provision of law, no person is required to respond to, nor shall any person be subject to a penalty for failure to comply with a collection of information, subject to the requirements of the Paperwork Reduction Act of 1995 (44 U.S.C. 3501*et seq.*) (PRA), unless that collection of information displays a currently valid Office of Management and Budget (OMB) Control Number. This rule involves a collection of information subject to the PRA. This collection has been approved by OMB under control number 0694–0122, ''Multi-Purpose Application,'' which carries a burden hour estimate of 10 minutes for a manual or electronic submission. Send comments regarding these burden estimates or any other aspect of this collection of information, including suggestions for reducing the burden, to David Rostker, Office of Management and Budget (OMB), by e-mail to *David_Rostker@omb.eop.gov,* or by fax to (202) 395–7285; and to the Office of Administration, Bureau of Industry and Security, Department of Commerce, 14th and Pennsylvania Avenue, NW., Room 6883, Washington, DC 20230.

3. This rule does not contain policies with federalism implications as that term is defined under E.O. 13132.

4. The Department finds under 5 U.S.C. 553(b)(B) that good cause exists to waive prior notice and opportunity for public comment. This rule revises the EAR to require licensees to communicate in writing specific license conditions to the parties to whom they apply. This rule merely clarifies the identify of the person to whom the notice must be provided. The previously existing EAR requirement to provide such notice is unchanged by this rule. Because the rule containing the error has not become effective, this correction is not a substantive change to the EAR. Accordingly, it is unnecessary to provide prior notice and opportunity for public comment. Therefore, this rule is being issued in final form.

Although there is no formal comment period, public comments on this regulation are welcome on a continuing basis. Comments should be submitted to Jeffrey Lynch, Regulatory Policy Division, Office of Exporter Services, Bureau of Industry and Security, P.O. Box 273, Washington, DC 20044, e-mailed to: jlynch@bis.doc.gov, or faxed to (202) 482–3355. The public record concerning this regulation will be maintained in the Bureau of Industry and Security Freedom of Information Records Inspection Facility, Room 6881, Department of Commerce, 14th Street and Pennsylvania Avenue, NW., Washington, DC 20230. Records in this facility may be inspected and copied in accordance with regulations published in part 4 of Title 15 of the Code of Federal Regulations. Information about the inspection and copying of records at the facility may be obtained from the Bureau of Industry and Security Freedom of Information Officer, at the above address or by calling (202) 482–0500. List of Subjects for 15 CFR Part

750 Administrative practice and procedure, Exports, Reporting and recordkeeping requirements.

Eileen Albanese,

Director, Office of Exporter Services.

[FR Doc. 04–26518 Filed 11–30–04; 8:45 am]

BILLING CODE 3510–33–P

DEPARTMENT OF TRANSPORTATION

Federal Highway Administration

23 CFR Part 655

[FHWA Docket No. FHWA–2004–17321]

RIN 2125–AF02

National Standards for Traffic Control Devices; the Manual on Uniform Traffic Control Devices for Streets and Highways; Specific Service and General Service Signing for 24-Hour Pharmacies

AGENCY: Federal Highway Administration (FHWA), DOT.

ACTION: Final rule.

SUMMARY: The FHWA published an interim final rule on May 10, 2004, that amended the 2003 Edition of the Manual on Uniform Traffic Control Devices (MUTCD) to permit the use of Specific Service and General Service signing to assist motorists in locating licensed 24-hour pharmacy services open to the public. Those changes were designated as Revision No. 1 to the 2003 Edition of the MUTCD, and they became effective on July 21, 2004. In the interim final rule, the FHWA provided a 50-day comment period for the public to review and make comment on the technical details. The FHWA adopts as final the interim rule for Revision No. 1, with certain changes to the technical details to address pertinent comments to the docket. The MUTCD is incorporated by reference in 23 CFR part 655, subpart F, and recognized as the national standard for traffic control devices used on all public roads.

DATES: This regulation is effective January 3, 2005. The incorporation by reference of the publication listed in this rule is approved by the Director of the Federal Register as of January 3, 2005.

FOR FURTHER INFORMATION CONTACT: Mr. Ernest Huckaby, Office of Transportation Operations (HOTO–1), (202) 366–9064, or Mr. Raymond Cuprill, Office of the Chief Counsel, (202) 366–0791, Federal Highway Administration, 400 Seventh Street, SW., Washington, DC 20590–0001. Office hours are from 7:45 a.m. to 4:15 p.m., *e.t.*, Monday through Friday, except Federal holidays.

SUPPLEMENTARY INFORMATION:

Electronic Access

This document and all comments received by the U.S. DOT Docket Facility, Room PL–401, may be viewed through the Docket Management System (DMS) at *http://dms.dot.gov*. The DMS is available 24 hours each day, 365 days each year. Electronic retrieval help and guidelines are available under the help section of this Web site.

An electronic copy of this document may be downloaded by using a computer, modem and suitable communications software from the Government Printing Office's Electronic Bulletin Board Service at (202) 512–1661. Internet users may reach the Office of the Federal Register's home page at *http://www.archives.gov* and the Government Printing Office's Web page at *http://www.gpoaccess.gov/nara*.

Background

On January 23, 2004, the President signed, thereby enacting into law, the Consolidated Appropriations Act, Fiscal Year 2004 (the Act), Public Law 108–199, 118 Stat. 3. Division F of the Act (the Transportation, Treasury, and Independent Agencies Appropriations Act, 2004, at 118 Stat. 279), Title I, section 124, directs the Secretary of Transportation to amend the MUTCD to include a provision permitting information to be provided to motorists to assist motorists in locating licensed 24-hour pharmacy services open to the public. The Act also allows placement of logo panels that display information disclosing the names or logos of pharmacies that are located within three miles of an interchange on the Federal-aid system.[1]

The FHWA published an interim final rule on May 10, 2004, at 69 FR 25828, that amended the 2003 Edition of the Manual on Uniform Traffic Control Devices (MUTCD) to implement the requirements of the Act and provide for the uniformity of signing for pharmacy services when jurisdictions choose to install such signs. Those changes were designated as Revision No. 1 to the 2003 Edition of the MUTCD, and they became effective on July 21, 2004. In the interim final rule, the FHWA provided a 50-day comment period for the public to review and make comment on the technical details. Based on the comments received and its own experience, the FHWA is adopting as final the interim rule for Revision No. 1, with certain changes to the technical details to address pertinent comments to the docket.

The text of this Revision No. 1 and the text of the 2003 Edition of the MUTCD with Revision No. 1 final text incorporated are available for inspection and copying as prescribed in 49 CFR part 7 at the FHWA Office of Transportation Operations. Furthermore, final Revision No. 1 changes are available on the MUTCD Internet site (*http://mutcd.fhwa.dot.gov*). The entire MUTCD text with final Revision No. 1 text incorporated is also available on this Internet site.

Summary of Comments

The FHWA received 36 letters submitted to the docket, of which four were duplicates of letters previously submitted to the docket. Comments were received from the National Committee on Uniform Traffic Control Devices (NCUTCD), four State Departments of Transportation, four members of Congress and a Senator all representing the State of Illinois, two national organizations representing pharmacy businesses, six other national organizations representing a variety of interests, nine organizations representing retail merchants or drug stores in individual States, one major national chain drug store company, and four individual private citizens. The FHWA has reviewed and analyzed all the comments received. General comments are discussed first, followed by discussion of significant comments and adopted changes in each of the individual sections of the MUTCD affected by this final rule.

Discussion of General Comments—Part 2 Signs

Nearly all the letters to the docket expressed either support for or opposition to the general concept of adding signing for 24-hour pharmacies to the MUTCD. The comments from the four members of Congress and the Senator representing the State of Illinois were in support of the changes. The FHWA was required by the law described above to add pharmacy signing to the MUTCD and, as a result, the interim final rule solicited comments only on the technical details of the signing and not the general concept. The comments we received in opposition to the general concept provided insufficient information to suggest that the FHWA should seek legislative relief at this time.

[1] Federal-aid systems are defined in 23 U.S.C. 101 and 103.

Discussion of Section 2D.45 General Service Signs (D9 Series)

A private citizen commented that the MUTCD changes included in the interim final rule went beyond the legislative mandate by including General Service signs as well as Specific Service (logo) signs, and that this was inappropriate. Although General Service signs for 24-hour pharmacies were not specifically mentioned in the law, these were addressed in the interim final rule because some States have no program for Specific Service signs and only use General Service signs. Also, in urban areas it is often impractical to provide Specific Service signing due to close spacing of interchanges and, in these conditions, many States use General Service signs instead as a stand-alone supplemental sign (such as the D9–18 or D9–18a) or as sets of individual D9 series signs attached to (supplementing) interchange guide signs. Therefore, the FHWA retains the General Service signs for 24-hour pharmacies in this final rule.

A national association representing pharmacists commented that eligibility for signing should be extended to pharmacies that are open less than 24 hours per day. Many other commenters, however, supported limiting the signing eligibility to 24-hour pharmacies, stating that there is a need for access to pharmacy services 24 hours a day and that signing leading travelers to a closed pharmacy would not be in the public interest. Because of these reasons and the fact that the legislation was specific in directing that eligibility be limited to 24-hour pharmacies, the FHWA declines to make any change to the 24 hours per day criterion for eligibility for General Service signing as contained in the interim final rule. This discussion and decision also apply to the similar criterion for pharmacy signing eligibility as stated in other applicable sections of Part 2 of the MUTCD, and the FHWA makes minor editorial changes to the text of various sections in Part 2 to add the words ''24-hour'' preceding ''pharmacy'' where needed for clarity.

A national association representing chain drug stores commented that the signing eligibility requirement for a licensed pharmacist to be on duty ''at all times'' and ''7 days per week'' are too inflexible, since pharmacists could be ''on a break'' and since some 24-hour pharmacies are closed on some holidays. The FHWA declines to make a change in these requirements as stated in the interim final rule. The FHWA believes that the intent of the legislation is to assure that road users can locate pharmacy services that are available at all times. A pharmacist can be on a ''break'' and still be on duty in the pharmacy, and in all probability will also be present on the pharmacy premises during the break. The service availability criterion for other 24 hours per day services, such as hospitals, emergency services, etc., is stated as ''24 hour service, 7 days per week'' in Section 2D.45 and these facilities are in fact open for service on holidays. States could make provisions in their service signing eligibility policies to account for pharmacist breaks and holidays, particularly if their individual State laws make reference to these situations and how they are to be handled.

The NCUTCD and a private citizen commented that the eligibility criteria for pharmacy signing should be modified to add that a State-licensed pharmacist must be ''present'' as well as ''on duty'' 24 hours per day, 7 days per week. The FHWA agrees with this comment and changes the text of Sections 2D.45, 2E.51, and 2F.01 accordingly. For a pharmacy to truly offer its prescription-dispensing services on a 24 hours per day basis, it is necessary that a licensed pharmacist be physically present at all times. It is possible for a pharmacist to be ''on duty'' in the employ of the individual pharmacy or of the pharmacy chain company that owns or operates the pharmacy, but not physically present (such as one ''late night'' pharmacist ''shared'' between two or more stores in a given city or region). If a pharmacist must travel to the pharmacy from some other location during late night hours if a road user needs his or her services, delays would result in filling the needed prescription. This would be inconsistent with the intent of the legislation. Adding the requirement for a licensed pharmacist to be ''present'' as well as on duty clarifies the intent.

The American Pharmacists Association (APhA), a national organization representing pharmacists, suggested that the D9–20 pharmacy symbol sign shown in Figure 2D–11 General Service Signs in the interim final rule should use a different design. Specifically, the APhA suggested that the ''One Symbol for Pharmacy'' design be used instead of the bold ''Rx'' symbol. The design of that symbol (hereafter referred to as ''the APhA symbol''), features an ''Rx'' with the ''x'' visually less distinct from the ''R'' than in the symbol used by the FHWA in the interim final rule (hereafter referred to as ''the FHWA symbol''). Also, inside the loop of the ''R'' of the APhA symbol are graphical stylized representations of three human figures (a man, a woman, and a child.) The APhA symbol is more visually cluttered than the FHWA symbol and would therefore provide a legibility distance considerably less than that of the FHWA symbol. There is no research indicating that the APhA symbol is more recognizable by the traveling public than the FHWA symbol. The FHWA believes that the simplicity and boldness of the FHWA symbol will aid in recognition, conspicuity, and legibility for road users, as compared to the APhA symbol. Also, the APhA comments state that that organization trademarked the APhA symbol in 1993. Because patented or trademarked symbols cannot be included in the MUTCD, the FHWA would require that the symbol be released to the public domain. Although the comments indicate that APhA would be willing to allow the FHWA to use the symbol, that is different from placing it into the public domain. It is likely that the APhA would want to retain its trademark so that the symbol could be used for other purposes regarding pharmacies and pharmacists, such as letterhead, business signs, etc. For these reasons, the FHWA believes that the pharmacy symbol shown for the D9–20 sign in the interim final rule is a better alternative to the APhA symbol and therefore makes no change in the symbol design.

The NCUTCD, 3 State highway authorities, and one private citizen suggested that the D9–20a ''24 HR'' plaque shown with the D9–20 pharmacy symbol in Figure 2D–11 in the interim final rule should be eliminated. These commenters stated that ''24 HR'' plaques are not required in the MUTCD for other services that must be available 24 hours per day in order to be eligible for signing (such as hospitals and emergency services).

A comment from a national chain drug store company supported the ''24 HR'' plaque because of the information and benefit it provides to travelers.

The FHWA believes that, although other services that must operate 24 hours per day to be eligible for signing do not require the use of a ''24 HR'' plaque, there is good reason to require the D9–20a ''24 HR'' plaque with the D9–20 Pharmacy symbol. Most road users expect and understand that a hospital must be open 24 hours per day; however, this is not the case with pharmacies. Most pharmacies are not open 24 hours per day, but the legislation specifically limits eligibility to 24-hour pharmacies. Therefore, it is necessary that road users being guided to a 24-hour pharmacy by these signs be advised that it is in fact a 24-hour pharmacy that can be accessed via the signed exit. Otherwise, there would be

doubt in the road user's mind as to whether or not to exit if he or she were seeking the pharmacy services during the middle of the night. Also, if the plaque were made an option rather than a requirement, then some States might use it and others would not, and this lack of uniform application would lead to road user confusion. The FHWA retains the required use of the D9–20a plaque with the D9–20 pharmacy symbol sign as stated in the interim final rule.

Discussion of Section 2E.51 General Services Signs

As stated earlier in the discussion of comments on Section 2D.45 General Service Signs, the FHWA retains the required use of the D9–20a ''24 HR'' plaque with the D9–20 pharmacy symbol General Service sign. For consistency with the principles stated in that discussion, the FHWA modifies Figure 2E–42 Examples of General Service Signs (with Exit Numbering) accordingly. In the D9–18 sign (with six service symbols) shown as the lower right sign of the 4 signs shown in the figure, the ''Rx'' symbol is shifted slightly upward on the sign so that it is closer to the lodging symbol above it, and the legend ''24 HR'' is added underneath the ''Rx'' symbol. Also, in the D9–18a sign shown as the lower left sign of the 4 signs shown in the figure, the legend ''24 HR'' is added to precede the word ''PHARMACY''.

The NCUTCD commented that the order of the services shown on the D9–18a word message sign in the lower left of the figure should be modified so that ''24 HR PHARMACY'' would be above ''HOSPITAL.'' The NCUTCD stated that this would avoid potential confusion with a hospital that has a pharmacy. The FHWA agrees with this comment and makes the change in Figure 2E–42. Some hospitals have pharmacies that serve hospital inpatients but not travelers, and a road user could misinterpret the two last lines of the D9–18a word message sign as being a single phrase ''hospital pharmacy,'' rather than two separate services, and infer that the pharmacy services might not be available to the traveler. Changing the order of the services such that hospital is on the bottom line will help prevent such a misinterpretation. For consistency with this change in the figure, the FHWA also modifies the last sentence of the fourth Option statement of Section 2E.51 to delete the phrase ''in the last position.''

Discussion of Section 2F.01 Eligibility

A few commenters suggested that the maximum distance of 3 miles from an interchange on the Federal-aid highway system to be eligible for pharmacy signing should be extended to up to 15 miles in cases where eligible pharmacies do not exist within 3 miles. These commenters cited the existing Option statement in Section 2F.01 that provides for extending the distance limit up to a maximum of 15 miles from an interchange for signing eligibility for other services, such as gas, food, and lodging, if those facilities within 3 miles are not available or choose not to participate in the program.

Other commenters stated their specific support of limiting eligibility to pharmacies within 3 miles and not extending that limit. These commenters stated that requiring the pharmacy to be within 3 miles is self-limiting and serve the best interests of travelers in need of pharmacy services. Further, the legislation was specific in directing that eligibility be limited to pharmacies within 3 miles of an interchange on the Federal-aid highway system. Accordingly, the FHWA declines to make any change to the maximum distance of 3 miles as a criterion for eligibility for Specific Service signing as contained in the interim final rule. This discussion and decision also apply to the similar criterion for pharmacy signing eligibility as stated in other applicable sections of Part 2 of the MUTCD.

A State highway authority commented that the phrase ''in either direction'' in both the last paragraph of the second Standard statement and the first paragraph of the second Guidance statement should be revised to ''in any direction'' to clarify that pharmacies are not limited to only one direction from an interchange. The FHWA agrees with this comment and makes this editorial change in both places in this final rule. ''Any direction'' is more accurate and inclusive than ''either direction,'' since there could be more than two directions that can be traveled away from a given interchange.

Discussion of Section 2F.02 Application

In the interim final rule, the first paragraph of the Option statement was modified to remove the list of various services that may be signed on any class of highway. The resulting text of this paragraph in the interim final rule stated, ''Specific Service signs may be used on any class of highway.'' The NCUTCD recommended that this wording is unnecessary because it repeats a similar statement that is in the first Option statement in Section 2F.01. The FHWA agrees that this is an unnecessary duplication and removes the first paragraph of the Option statement in Section 2F.02 in this final rule.

Discussion of Chapter 2H Recreational and Cultural Interest Area Signs

Comments from the NCUTCD, one State highway authority, and one private citizen opposed the addition of the RM–230 24-Hour Pharmacy symbol sign in the series of brown and white recreational and cultural interest area symbol signs. These commenters stated that pharmacy signing is not needed as a recreational area sign.

A national chain drug store company stated its support for adding the RM–230 sign in Chapter 2H, citing consistency with similar brown and white symbol signs for gas, food, and lodging that are included in Chapter 2H. The FHWA agrees and declines to remove the RM–230 sign that was included in Chapter 2H in the interim final rule. Brown and white symbol signs for gas, food, and lodging are included in Chapter 2H because these services are often available within recreational areas such as National Parks, and thus there can be a need to provide guide signing to those facilities from the park entrance road or from other areas within the park. Also, there are certain park roadways in some urbanized areas, such as National Historical Parkways, and some linear park roads such as adjacent to Grand Tetons National Park, that also provide access to nearby towns and cities where 24-hour pharmacies may exist and may meet the criteria for signing. Chapter 2H provides for the use of brown and white General Service signing on park roadways. Therefore, it is appropriate and consistent to include in Chapter 2H a brown and white version of the pharmacy symbol sign for use if General Service signing for a 24-hour pharmacy is needed on a roadway of this type.

Rulemaking Analyses and Notices

Executive Order 12866 (Regulatory Planning and Review) and U.S. DOT Regulatory Policies and Procedures

The FHWA has determined that this action is not a significant regulatory action within the meaning of Executive Order 12866 or significant within the meaning of the U.S. Department of Transportation regulatory policies and procedures. Including 24-hour pharmacies in General and Specific Service signs is required by law (see section 124 Division F, Title I, of Public Law 108–199, January 23, 2004). States and other jurisdictions are not required to install signs for pharmacy services,

but if they elect to do so, these amendments to the MUTCD will create uniformity in how the Pharmacy signs are used on public roads. These changes will not adversely affect, in a material way, any sector of the economy. In addition, these changes will not create a serious inconsistency with any other agency's action or materially alter the budgetary impact of any entitlements, grants, user fees, or loan programs; nor will the changes raise any novel legal or policy issues. Therefore, a full regulatory evaluation is not required.

Regulatory Flexibility Act

In compliance with the Regulatory Flexibility Act (RFA) (Pub. L. 96–354, 5 U.S.C. 601–612) the FHWA has evaluated the effects of this action on small entities and has determined that this action will not have a significant economic impact on a substantial number of small entities. This action adds General Service and Specific Service signing for optional use by States to provide motorist information concerning pharmacies in order to aid the traveling public. States are not included in the definition of small entity set forth in 5 U.S.C. 601. For these reasons, the RFA does not apply and the FHWA certifies that this action will not have a significant economic impact on a substantial number of small entities.

Unfunded Mandates Reform Act of 1995

This final rule will not impose unfunded mandates as defined by the Unfunded Mandates Reform Act of 1995 (Pub. L. 104–4, March 22, 1995, 109 Stat. 48). This final rule will not result in the expenditure by State, local, and tribal governments, in the aggregate, or by the private sector, of $120.7 million or more in any one year (2 U.S.C. 1532). States and other jurisdictions are not required to install signs for pharmacy services, but if they elect to do so, these amendments to the MUTCD will create uniformity in how the signs are used on public roads.

Executive Order 13132 (Federalism)

This action has been analyzed in accordance with the principles and criteria contained in Executive Order 13132, dated August 4, 1999, and it has been determined that this action does not have a substantial direct effect or sufficient federalism implications on States that would limit the policymaking discretion of the States. The FHWA has also determined that this action does not preempt any State law or State regulation or affect the States' ability to discharge traditional State governmental functions.

The MUTCD is incorporated by reference in 23 CFR part 655, subpart F. These amendments are in keeping with the Secretary of Transportation's authority under 23 U.S.C. 109(d), 315, and 402(a) to promulgate uniform guidelines to promote the safe and efficient use of the highway. The overriding safety benefits of the uniformity prescribed by the MUTCD are shared by all of the State and local governments, and changes made to this rule are directed at enhancing safety. To the extent that these amendments override any existing State requirements regarding traffic control devices, they do so in the interest of national uniformity.

Executive Order 12372 (Intergovernmental Review)

Catalog of Federal Domestic Assistance Program Number 20.205, Highway Planning and Construction. The regulations implementing Executive Order 12372 regarding intergovernmental consultation on Federal programs and activities apply to this program.

Paperwork Reduction Act of 1995

This action does not contain a collection of information requirement under the Paperwork Reduction Act of 1995, 44 U.S.C. 3501–3520.

Executive Order 13175 (Tribal Consultation)

The FHWA has analyzed this action under Executive Order 13175, dated November 6, 2000, and believes that it will not have substantial direct effects on one or more Indian tribes; will not impose substantial direct compliance costs on Indian tribal governments; and will not preempt tribal law. The requirements set forth in this final rule do not directly affect one or more Indian tribes. Therefore, a tribal summary impact statement is not required.

Executive Order 13211 (Energy Effects)

The FHWA has analyzed this action under Executive Order 13211, Actions Concerning Regulations That Significantly Affect Energy Supply, Distribution, or Use. We have determined that this is not a significant energy action under that order because it is not a significant regulatory action under Executive Order 12866 and is not likely to have a significant adverse effect on the supply, distribution, or use of energy.

National Environmental Policy Act

The agency has analyzed this action for the purposes of the National Environmental Policy Act of 1969 (42 U.S.C. 4321–4347 *et seq.*) and has determined that it will not have any effect on the quality of the environment.

Executive Order 12630 (Taking of Private Property)

The FHWA has analyzed this final rule under Executive Order 12630, Government Actions and Interference with Constitutionally Protected Property Rights. The FHWA does not anticipate that this action will effect a taking of private property or otherwise have taking implications under Executive Order 12630.

Executive Order 12988 (Civil Justice Reform)

This action meets applicable standards in Sections 3(a) and 3(b)(2) of Executive Order 12988, Civil Justice Reform, to minimize litigation, eliminate ambiguity, and reduce burden.

Executive Order 13045 (Protection of Children)

The FHWA has analyzed this action under Executive Order 13045, Protection of Children from Environmental Health Risks and Safety Risks. The FHWA certifies that this action will not cause an environmental risk to health or safety that may disproportionately affect children.

Regulation Identification Number

A regulation identification number (RIN) is assigned to each regulatory action listed in the Unified Agenda of Federal Regulations. The Regulatory Information Service Center publishes the Unified Agenda in April and October of each year. The RIN contained in the heading of this document can be used to cross reference this action with the Unified Agenda.

List of Subjects in 23 CFR Part 655

Design standards, Grant programs—Transportation, Highways and roads, Incorporation by reference, Signs and symbols, Traffic regulations.

Issued on: November 22, 2004.

Mary E. Peters,

Federal Highway Administrator.

■ In consideration of the foregoing, FHWA adopts as final the interim final rule published May 10, 2004 (69 FR 25828), with the following change:

PART 655—TRAFFIC OPERATIONS

■ 1. The authority citation for part 655 continues to read as follows:

Authority: 23 U.S.C. 101(a), 104, 109(d), 114(a), 217, 315, and 402(a); 23 CFR 1.32; and 49 CFR 1.48(b).

Subpart F—Traffic Control Devices on Federal-Aid and Other Streets and Highways—[Amended]

■ 2. Amend §655.601(a), to read as follows:

§ 655.601 Purpose.

* * * * *

(a) Manual on Uniform Traffic Control Devices for Streets and Highways (MUTCD), 2003 Edition, including Revision No.1, FHWA, dated November 2004. This publication is incorporated by reference in accordance with 5 U.S.C. 552 (a) and 1 CFR part 51 and is on file at the National Archives and Record Administration (NARA). For information on the availability of this material at NARA call (202) 741–6030, or go to *http://www.archives.gov/federal_register/code_of_federal_regulations/ibr_locations.html.* It is available for inspection and copying at the Federal Highway Administration, 400 Seventh Street, SW., Room 3408, Washington, DC 20590, as provided in 49 CFR part 7. The text is also available from the FHWA Office of Transportation Operations' Web site at: *http://mutcd.fhwa.dot.gov.*

* * * * *

[FR Doc. 04–26417 Filed 11–30–04; 8:45 am]

BILLING CODE 4910–22–P

DEPARTMENT OF THE TREASURY

Internal Revenue Service

26 CFR Part 31

[TD 9162]

RIN 1545–BB66

Federal Unemployment Tax Deposits—De Minimis Threshold

AGENCY: Internal Revenue Service (IRS), Treasury.

ACTION: Final regulations.

SUMMARY: This document contains final regulations relating to the deposit of Federal Unemployment Tax Act (FUTA) taxes. The regulations change the accumulated amount of tax liability above which taxpayers must begin depositing Federal unemployment taxes. The regulations affect employers that have an accumulated FUTA tax liability of $500 or less.

DATES: *Effective Date:* These regulations are effective December 1, 2004.

Applicability Date: For dates of applicability, see § 31.6302(c)–3(a)(2) and (3).

FOR FURTHER INFORMATION CONTACT: Heather L. Dostaler, (202) 622–4940 (not a toll-free number).

SUPPLEMENTARY INFORMATION:

Background

This document contains amendments to the Regulations on Employment Taxes and Collection of Income Tax at Source (26 CFR part 31) under section 6302 relating to mode or time of collection. The current rules relating to the deposit of FUTA taxes generally require employers to deposit taxes on a quarterly basis. An exception provides that an employer is not required to make a deposit until accumulated FUTA tax liability exceeds $100.

A notice of proposed rulemaking (REG–144908–02) providing an additional exception to the FUTA tax deposit requirements was published in the **Federal Register** (68 FR 42329) on July 17, 2003. Under the proposed exception, an employer would not be required to deposit FUTA taxes if the employer's liability for other employment taxes (FICA taxes and withheld income taxes) was below the threshold at which deposits were required for those other taxes.

Three written comments were received in response to the notice of proposed rulemaking, but there was no request for a public hearing and a public hearing was not held. All comments were considered and are available for public inspection upon request. After consideration of the written comments, the proposed regulations under section 6302 are adopted as revised by this Treasury decision. The public comments and the revisions are discussed below.

Summary of Comments

Two commentators expressed concern that the creation of an additional exception linked to the deposit rules for other employment taxes will create complexity and that a single exception based on FUTA tax liability is sufficient. One commentator expressed concern regarding the low threshold amounts under both exceptions, and also expressed concern that the proposed exception could be misinterpreted by those accustomed to referring only to the amount of accumulated FUTA taxes.

One commentator suggested that the regulations should exempt household employers who file Schedule H, ''Household Employment Taxes,'' with Form 1040. This comment is outside the scope of these regulations, which are limited to the deposit rules issued under section 6302. Household employment taxes reported on Schedule H are paid with the employer's income taxes.

Explanation of Provisions

After considering the public comments, the IRS and Treasury Department agree that a single exception based on a higher FUTA tax liability threshold is preferable to the exception in the proposed regulations. Accordingly, the final regulations do not include an exception linked to the deposit rules for other employment taxes. Instead, they increase the FUTA tax liability threshold from $100 to $500. Thus, an employer will not be required to make a deposit of FUTA taxes until FUTA tax liability exceeds $500. This change is a simple and straightforward step to reduce the burden on small businesses.

Special Analyses

It has been determined that this Treasury decision is not a significant regulatory action as defined in Executive Order 12866. Therefore, a regulatory assessment is not required. It also has been determined that section 553(b) of the Administrative Procedure Act (5 U.S.C. chapter 5) does not apply to these regulations, and, because these regulations do not impose a collection of information on small entities, the Regulatory Flexibility Act (5 U.S.C. chapter 6) does not apply. Pursuant to section 7805(f) of the Internal Revenue Code, the notice of proposed rulemaking preceding these regulations was submitted to the Chief Counsel for Advocacy of the Small Business Administration for comment on its impact on small business.

Drafting Information

The principal author of these regulations is Heather L. Dostaler of the Office of Associate Chief Counsel, Procedure and Administration (Administrative Provisions and Judicial Practice Division).

List of Subjects in 26 CFR Part 31

Employment taxes, Income taxes, Penalties, Pensions, Railroad retirement, Reporting and recordkeeping requirements, Social Security, Unemployment compensation.

Adoption of Amendments to the Regulations

■ Accordingly, 26 CFR part 31 is amended as follows:

PART 31—EMPLOYMENT TAXES AND COLLECTION OF INCOME TAX AT SOURCE

■ **Paragraph 1.** The authority citation for part 31 continues to read, in part, as follows:

Authority: 26 U.S.C. 7805 * * *

■ **Par. 2.** In § 31.6302(c)–3, paragraphs (a)(2) and (a)(3) are revised to read as follows:

§ 31.6302(c)–3 Use of Government depositaries in connection with tax under the Federal Unemployment Tax Act.

(a) * * *

(2) *Special rule where accumulated amount does not exceed $500.* The provisions of paragraph (a)(1) of this section shall not apply with respect to any period described therein if the amount of the tax imposed by section 3301 for such period (as computed under section 6157) plus amounts not deposited for prior periods does not exceed $500 ($100 in the case of periods ending on or before December 31, 2004). Thus, an employer shall not be required to make a deposit for a period unless his tax for such period plus tax not deposited for prior periods exceeds $500.

(3) *Requirement for deposit in lieu of payment with return.* If the amount of tax reportable on a return on Form 940 exceeds by more than $500 ($100 in the case of calendar years before 2005) the sum of the amounts deposited by the employer pursuant to paragraph (a)(1) of this section for such calendar year, the employer shall, on or before the last day of the first calendar month following the calendar year for which the return is required to be filed, deposit the balance of the tax due with an authorized financial institution.

* * * * *

Mark E. Matthews,

Deputy Commissioner for Services and Enforcement.

Approved: November 23, 2004.

Gregory Jenner,

Acting Assistant Secretary of the Treasury.

[FR Doc. 04–26511 Filed 11–30–04; 8:45 am]

BILLING CODE 4830–01–P

PENSION BENEFIT GUARANTY CORPORATION

29 CFR Parts 4011 and 4022

Disclosure to Participants; Benefits Payable in Terminated Single-Employer Plans

AGENCY: Pension Benefit Guaranty Corporation.

ACTION: Final rule.

SUMMARY: This rule amends Appendix D to the Pension Benefit Guaranty Corporation's regulation on Benefits Payable in Terminated Single-Employer Plans by adding the maximum guaranteeable pension benefit that may be paid by the PBGC with respect to a plan participant in a single-employer pension plan that terminates in 2005. This rule also amends the PBGC's regulation on Disclosure to Participants by adding information on 2005 maximum guaranteed benefit amounts to Appendix B. The amendment is necessary because the maximum guarantee amount changes each year, based on changes in the contribution and benefit base under section 230 of the Social Security Act. The effect of the amendment is to advise plan participants and beneficiaries of the increased maximum guarantee amount for 2005.

EFFECTIVE DATE: January 1, 2005.

FOR FURTHER INFORMATION CONTACT: Harold J. Ashner, Assistant General Counsel, Office of the General Counsel, Pension Benefit Guaranty Corporation, 1200 K Street, NW., Washington, DC 20005–4026; 202–326–4024. (TTY/TDD users may call the Federal relay service toll-free at 1–800–877–8339 and ask to be connected to 202–326–4024.)

SUPPLEMENTARY INFORMATION: Section 4022(b) of the Employee Retirement Income Security Act of 1974 provides for certain limitations on benefits guaranteed by the PBGC in terminating single-employer pension plans covered under title IV of ERISA. One of the limitations, set forth in section 4022(b)(3)(B), is a dollar ceiling on the amount of the monthly benefit that may be paid to a plan participant (in the form of a life annuity beginning at age 65) by the PBGC. The ceiling is equal to ''$750 multiplied by a fraction, the numerator of which is the contribution and benefit base (determined under section 230 of the Social Security Act) in effect at the time the plan terminates and the denominator of which is such contribution and benefit base in effect in calendar year 1974 [$13,200].'' This formula is also set forth in § 4022.22(b) of the PBGC's regulation on Benefits Payable in Terminated Single-Employer Plans (29 CFR part 4022). Appendix D to part 4022 lists, for each year beginning with 1974, the maximum guaranteeable benefit payable by the PBGC to participants in single-employer plans that have terminated in that year.

Section 230(d) of the Social Security Act (42 U.S.C. 430(d)) provides special rules for determining the contribution and benefit base for purposes of ERISA section 4022(b)(3)(B). Each year the Social Security Administration determines, and notifies the PBGC of, the contribution and benefit base to be used by the PBGC under these provisions, and the PBGC publishes an amendment to Appendix D to Part 4022 to add the guarantee limit for the coming year.

The PBGC has been notified by the Social Security Administration that, under section 230 of the Social Security Act, $66,900 is the contribution and benefit base that is to be used to calculate the PBGC maximum guaranteeable benefit for 2005. Accordingly, the formula under section 4022(b)(3)(B) of ERISA and 29 CFR § 4022.22(b) is: $750 multiplied by $66,900/$13,200. Thus, the maximum monthly benefit guaranteeable by the PBGC in 2005 is $3,801.14 per month in the form of a life annuity beginning at age 65. This amendment updates Appendix D to Part 4022 to add this maximum guaranteeable amount for plans that terminate in 2005. (If a benefit is payable in a different form or begins at a different age, the maximum guaranteeable amount is the actuarial equivalent of $3,801.14 per month.)

Section 4011 of ERISA requires plan administrators of certain underfunded plans to provide notice to plan participants and beneficiaries of the plan's funding status and the limits of the PBGC's guarantee. The PBGC's regulation on Disclosure to Participants (29 CFR Part 4011) implements the statutory notice requirement. This rule amends Appendix B to the regulation on Disclosure to Participants by adding information on 2005 maximum guaranteed benefit amounts. Plan administrators may, subject to the requirements of that regulation, include this information in participant notices.

General notice of proposed rulemaking is unnecessary. The maximum guaranteeable benefit is determined according to the formula in section 4022(b)(3)(B) of ERISA, and these amendments make no change in its method of calculation but simply list 2005 maximum guaranteeable benefit amounts for the information of the public.

The PBGC has determined that this action is not a ''significant regulatory action'' under the criteria set forth in Executive Order 12866.

Because no general notice of proposed rulemaking is required for this regulation, the Regulatory Flexibility Act of 1980 does not apply (5 U.S.C. 601(2)).

List of Subjects

29 CFR Part 4011

Employee benefit plans, Pension insurance, Reporting and recordkeeping requirements.

29 CFR Part 4022

Pension insurance, Pensions, Reporting and recordkeeping requirements.

■ In consideration of the foregoing, 29 CFR parts 4011 and 4022 are amended as follows:

PART 4011—DISCLOSURE TO PARTICIPANTS

■ 1. The authority citation for part 4011 continues to read as follows:

Authority: 29 U.S.C. 1302(b)(3), 1311.

■ 2. Appendix B to part 4011 is amended by adding a new entry in numerical order to the table to read as follows.

APPENDIX B TO PART 4011—TABLE OF MAXIMUM GUARANTEED BENEFITS

If a plan terminates in—	The maximum guaranteed benefit for an individual starting to receive benefits at the age listed below is the amount (monthly or annual) listed below:							
	Age 65		Age 62		Age 60		Age 55	
	Monthly	Annual	Monthly	Annual	Monthly	Annual	Monthly	Annual
*	*		*	*	*	*	*	
2005	$3,801.14	$45,613.68	$3,002.90	$36,034.80	$2,470.74	$29,648.88	$1,710.51	$20,526.12

* * * * *

PART 4022—BENEFITS PAYABLE IN TERMINATED SINGLE-EMPLOYER PLANS

■ 3. The authority citation for Part 4022 continues to read as follows:

Authority: 29 U.S.C. 1302, 1322, 1322b, 1341(c)(3)(D), and 1344.

■ 4. Appendix D to part 4022 is amended by adding a new entry to the table to read as follows. The introductory text is reproduced for the convenience of the reader and remains unchanged.

Appendix D to Part 4022—Maximum Guaranteeable Monthly Benefit

The following table lists by year the maximum guaranteeable monthly benefit payable in the form of a life annuity commencing at age 65 as described by § 4022.22(b) to a participant in a plan that terminated in that year:

Year	Maximum guaranteeable monthly benefit
* * * * *	
2005	$3,801.14

Issued in Washington, DC, this 23rd day of November, 2004.

Joseph H. Grant,

Deputy Executive Director and Chief Operating Officer, Pension Benefit Guaranty Corporation.

[FR Doc. 04–26428 Filed 11–30–04; 8:45 am]

BILLING CODE 7708–01–P

PENSION BENEFIT GUARANTY CORPORATION

29 CFR Part 4044

Allocation of Assets in Single-Employer Plans; Valuation of Benefits and Assets; Expected Retirement Age

AGENCY: Pension Benefit Guaranty Corporation.

ACTION: Final rule.

SUMMARY: This rule amends the Pension Benefit Guaranty Corporation's regulation on Allocation of Assets in Single-Employer Plans by substituting a new table that applies to any plan being terminated either in a distress termination or involuntarily by the PBGC with a valuation date falling in 2005, and is used to determine expected retirement ages for plan participants. This table is needed in order to compute the value of early retirement benefits and, thus, the total value of benefits under the plan.

EFFECTIVE DATE: January 1, 2005.

FOR FURTHER INFORMATION CONTACT: Harold J. Ashner, Assistant General Counsel, Office of the General Counsel, Pension Benefit Guaranty Corporation, 1200 K Street, NW., Washington, DC 20005–4026; 202–326–4024. (TTY/TDD users may call the Federal relay service toll-free at 1–800–877–8339 and ask to be connected to 202–326–4024.)

SUPPLEMENTARY INFORMATION: The PBGC's regulation on Allocation of Assets in Single-Employer Plans (29 CFR part 4044) sets forth (in subpart B) the methods for valuing plan benefits of terminating single-employer plans covered under Title IV of the Employee Retirement Income Security Act of 1974. Under ERISA section 4041(c), guaranteed benefits and benefit liabilities under a plan that is undergoing a distress termination must be valued in accordance with part 4044, subpart B. In addition, when the PBGC terminates an underfunded plan involuntarily pursuant to ERISA Section 4042(a), it uses the subpart B valuation rules to determine the amount of the plan's underfunding.

Under § 4044.51(b), early retirement benefits are valued based on the annuity starting date, if a retirement date has been selected, or the expected retirement age, if the annuity starting date is not known on the valuation date. Sections 4044.55 through 4044.57 set forth rules for determining the expected retirement ages for plan participants entitled to early retirement benefits. Appendix D of part 4044 contains tables to be used in determining the expected early retirement ages.

Table I in appendix D (Selection of Retirement Rate Category) is used to determine whether a participant has a low, medium, or high probability of retiring early. The determination is based on the year a participant would reach ''unreduced retirement age'' (*i.e.*, the earlier of the normal retirement age or the age at which an unreduced benefit is first payable) and the participant's monthly benefit at unreduced retirement age. The table applies only to plans with valuation dates in the current year and is updated annually by the PBGC to reflect changes in the cost of living, etc.

Tables II–A, II–B, and II–C (Expected Retirement Ages for Individuals in the Low, Medium, and High Categories respectively) are used to determine the expected retirement age after the probability of early retirement has been determined using Table I. These tables establish, by probability category, the

expected retirement age based on both the earliest age a participant could retire under the plan and the unreduced retirement age. This expected retirement age is used to compute the value of the early retirement benefit and, thus, the total value of benefits under the plan.

This document amends appendix D to replace Table I–04 with Table I–05 in order to provide an updated correlation, appropriate for calendar year 2005, between the amount of a participant's benefit and the probability that the participant will elect early retirement. Table I–05 will be used to value benefits in plans with valuation dates during calendar year 2005.

The PBGC has determined that notice of and public comment on this rule are impracticable and contrary to the public interest. Plan administrators need to be able to estimate accurately the value of plan benefits as early as possible before initiating the termination process. For that purpose, if a plan has a valuation date in 2005, the plan administrator needs the updated table being promulgated in this rule. Accordingly, the public interest is best served by issuing this table expeditiously, without an opportunity for notice and comment, to allow as much time as possible to estimate the value of plan benefits with the proper table for plans with valuation dates in early 2005.

The PBGC has determined that this action is not a ''significant regulatory action'' under the criteria set forth in Executive Order 12866.

Because no general notice of proposed rulemaking is required for this regulation, the Regulatory Flexibility Act of 1980 does not apply (5 U.S.C. 601(2)).

List of Subjects in 29 CFR Part 4044

Pension insurance, Pensions.

■ In consideration of the foregoing, 29 CFR part 4044 is amended as follows:

PART 4044—[AMENDED]

■ 1. The authority citation for part 4044 continues to read as follows:

Authority: 29 U.S.C. 1301(a), 1302(b)(3), 1341, 1344, 1362.

■ 2. Appendix D to part 4044 is amended by removing Table I–04 and adding in its place Table I–05 to read as follows:

Appendix D to Part 4044—Tables Used To Determine Expected Retirement Age

TABLE I–05.—SELECTION OF RETIREMENT RATE CATEGORY

[For Plans with valuation dates after December 31, 2004, and before January 1, 2006]

Participant reaches URA in year—	Participant's retirement rate category is—			
	Low [1] if monthly benefit at URA is less than—	Medium [2] if monthly benefit at URA is		High [3] if monthly benefit at URA is greater than—
		From	To	
2006	477	477	2,018	2,018
2007	486	486	2,056	2,056
2008	497	497	2,102	2,102
2009	509	509	2,154	2,154
2010	522	522	2,208	2,208
2011	535	535	2,263	2,263
2012	549	549	2,320	2,320
2013	562	562	2,378	2,378
2014	576	576	2,437	2,437
2015 or later	591	591	2,498	2,498

[1] Table II–A.
[2] Table II–B.
[3] Table II–C.

* * * * *

Issued in Washington, DC, this 23rd day of November, 2004.

Joseph H. Grant,

Deputy Executive Director and Chief Operating Officer, Pension Benefit Guaranty Corporation.

[FR Doc. 04–26429 Filed 11–30–04; 8:45 am]

BILLING CODE 7708–01–P

LIBRARY OF CONGRESS

Copyright Office

37 CFR Part 253

[Docket No. 2004–8 CARP NCBRA]

Cost of Living Adjustment for Performance of Musical Compositions by Colleges and Universities

AGENCY: Copyright Office, Library of Congress.

ACTION: Final rule.

SUMMARY: The Copyright Office of the Library of Congress announces a cost of living adjustment of 3.2% in the royalty rates paid by colleges, universities, or other nonprofit educational institutions that are not affiliated with National Public Radio for the use of copyrighted published nondramatic musical compositions in the BMI, ASCAP and SESAC repertoires. The cost of living adjustment is based on the change in the Consumer Price Index from October, 2003 to October, 2004.

DATES: January 1, 2005.

FOR FURTHER INFORMATION CONTACT: Tanya M. Sandros, Associate General Counsel, Copyright Arbitration Royalty Panel, P.O. Box 70977, Southwest Station, Washington, D.C. 20024. Telephone: (202) 707–8380. Telefax: (202) 252–3423.

SUPPLEMENTARY INFORMATION: Section 118 of the Copyright Act, 17 U.S.C., creates a compulsory license for the use of published nondramatic musical works and published pictorial, graphic, and sculptural works in connection with noncommercial broadcasting. Terms and rates for this compulsory license, applicable to parties who are

not subject to privately negotiated licenses, are published in 37 CFR part 253 and are subject to adjustment at five–year intervals. 17 U.S.C. 118(c).

The most recent proceeding to consider the terms and rates for the section 118 license occurred in 2002. 67 FR 15414 (April 1, 2002). Final regulations governing the terms and rates of copyright royalty payments with respect to certain uses by public broadcasting entities of published nondramatic musical works, and published pictorial, graphic, and sculptural works for the license period beginning January 1, 2003, and ending December 31, 2007, were published in the Federal Register on December 17, 2002. 67 FR 77170 (December 17, 2002).

Pursuant to these regulations, on December 1 of each year the Librarian shall publish a notice of the change in the cost of living as determined by the Consumer Price Index (all consumers, all items) during the period from the most recent Index published prior to the previous notice, to the most recent Index published prior to December 1, of that year. 37 CFR 253.10(a). The regulations also require that the Librarian publish a revised schedule of rates for the public performance of musical compositions in the ASCAP, BMI, and SESAC repertoires by public broadcasting entities licensed to colleges and universities, reflecting the change in the Consumer Price Index. 37 CFR 253.10(b). Accordingly, the Copyright Office of the Library of Congress is hereby announcing the change in the Consumer Price Index and performing the annual cost of living adjustment to the rates set out in §253.5(c).

The change in the cost of living as determined by the Consumer Price Index (all consumers, all items) during the period from the most recent Index published before December 1, 2003, to the most recent Index published before December 1, 2004, is 3.2% (2003's figure was 185.0; the figure for 2004 is 190.9, based on 1982–1984=100 as a reference base). Rounding off to the nearest dollar, the royalty rates for the use of musical compositions in the repertories of ASCAP, BMI, and SESAC are $262, $262, and $85, respectively.

List of Subjects in 37 CFR Part 253

Copyright, Radio, Television.

Final Regulation

■ For the reasons set forth in the preamble, part 253 of title 37 of the Code of Federal Regulations is amended as follows:

PART 253—USE OF CERTAIN COPYRIGHTED WORKS IN CONNECTION WITH NONCOMMERCIAL EDUCATIONAL BROADCASTING

■ 1. The authority citation for part 253 continues to read as follows:

Authority: 17 U.S.C. 118, 801(b)(1) and 803.

■ 2. Section 253.5 is amended by revising paragraphs (c)(1) through (c)(3) as follows:

§253.5 Performance of musical compositions by public broadcasting entities licensed to colleges and universities.

* * * * *

(c) * * *

(1) For all such compositions in the repertory of ASCAP, $262 annually.

(2) For all such compositions in the repertory of BMI, $262 annually.

(3) For all such compositions in the repertory of SESAC, $85 annually.

* * * * *

Date: November 22, 2004

Marybeth Peters,

Register of Copyrights.

[FR Doc. 04–26265 Filed 11–30–04; 8:45 am]

BILLING CODE 1410–33–S

ENVIRONMENTAL PROTECTION AGENCY

40 CFR Part 52

[R10–OAR–2004–OR–0001; FRL–7839–5]

Approval and Promulgation of Air Quality Implementation Plans; Oregon; Removal of Perchloroethylene Dry Cleaning Systems Rules

AGENCY: Environmental Protection Agency (EPA).

ACTION: Direct final rule.

SUMMARY: EPA is taking direct final action to approve a revision to the Oregon State Implementation Plan and repeal rules which are no longer required by the Clean Air Act. The revision consists of the repeal of Oregon's control technology guidelines for perchloroethylene (perc) dry cleaning systems and related definitions and provisions. Perc is a solvent commonly used in dry cleaning, maskant operations, and degreasing operations. In 1996, EPA excluded perc from the Federal definition of volatile organic compounds for the purpose of preparing state implementation plans to attain the national ambient air quality standards for ozone under title I of the Clean Air Act. Emissions from perc dry cleaners continue to be regulated as hazardous air pollutants under the National Emissions Standards for Hazardous Air Pollutants.

DATES: This direct final rule will be effective January 31, 2005, without further notice, unless EPA receives adverse comments by January 3, 2005. If adverse comments are received, EPA will publish a timely withdrawal of the direct final rule in the **Federal Register** informing the public that the rule will not take effect.

ADDRESSES: Submit your comments, identified by Docket ID No. R10–OAR–2004–OR–0001, by one of the following methods:

- Federal eRulemaking Portal: *http://www.regulations.gov.* Follow the on-line instructions for submitting comments.
- Agency Web site: *http://www.epa.gov/edocket.* EDOCKET, EPA's electronic public docket and comment system, is EPA's preferred method for receiving comments. Follow the on-line instructions for submitting comments.
- Mail: Colleen Huck, Office of Air, Waste and Toxics, AWT–107 EPA, Region 10, 1200 Sixth Ave., Seattle, Washington 98101.
- Hand Delivery: Colleen Huck, Office of Air, Waste and Toxics, AWT–107, 9th Floor, EPA, Region 10, 1200 Sixth Ave., Seattle, Washington 98101. Such deliveries are only accepted during normal hours of operation, and special arrangements should be made for deliveries of boxed information.

Instructions: Direct your comments to Docket ID No. R10–OAR–2004–OR–0001. EPA's policy is that all comments received will be included in the public docket without change and may be made available online at *http://www.epa.gov/edocket,* including any personal information provided, unless the comment includes information claimed to be Confidential Business Information (CBI) or other information whose disclosure is restricted by statute. Do not submit information that you consider to be CBI or otherwise protected through EDOCKET, regulations.gov or e-mail. The EPA EDOCKET and the Federal regulations.gov Web site are ''anonymous access'' systems, which means EPA will not know your identity or contact information unless you provide it in the body of your comment. If you send an e-mail comment directly to EPA without going through EDOCKET or regulations.gov, your e-mail address will be automatically captured and included as part of the comment that is placed in the public docket and made available on the Internet. If you submit an electronic comment, EPA recommends that you

include your name and other contact information in the body of your comment and with any disk or CD–ROM you submit. If EPA cannot read your comment due to technical difficulties and cannot contact you for clarification, EPA may not be able to consider your comment. Electronic files should avoid the use of special characters, any form of encryption, and be free of any defects or viruses.

Docket: All documents in the docket are listed in the EDOCKET index at *http://www.epa.gov/edocket.* Although listed in the index, some information is not publicly available, such as CBI or other information whose disclosure is restricted by statute. Certain other material, such as copyrighted material, is not placed on the Internet and will be publicly available only in hard copy form. Publicly available docket materials are available either electronically in EDOCKET or in hard copy at EPA, Region 10, Office of Air, Waste and Toxics, 1200 Sixth Avenue, Seattle, Washington, from 8 a.m. to 4:30 p.m. Monday through Friday, excluding legal holidays.

FOR FURTHER INFORMATION CONTACT: Colleen Huck at telephone number: (206) 553–1770, e-mail address: *Huck.Colleen@epa.gov;* or Donna Deneen at telephone number: (206) 553–6706, e-mail address: *Deneen.Donna@epa.gov,* fax number: (206) 553–0110, or the above EPA, Region 10 address.

SUPPLEMENTARY INFORMATION:

I. Background

In 1996, EPA excluded perc from the Federal definition of volatile organic compounds (VOC) for the purpose of preparing state implementation plans (SIPs) to attain the national ambient air quality standards (NAAQS) for ozone under title I of the Clean Air Act. *See* 61 FR 4588 (February 7, 1996). The basis for EPA's decision was that perc has negligible photochemical reactivity and that removing perc from the definition of VOC would result in a more accurate assessment of ozone formation potential and assist States in avoiding exceedances of the ozone health standard. 61 FR at 4588. EPA noted that perc would continue to be regulated as a hazardous air pollutant under section 112 of the Clean Air Act and the National Emission Standard for Hazardous Air Pollutants (NESHAPs), such as the NESHAP for Perchloroethylene Air Emission Standards for Dry Cleaning Facilities, 40 CFR part 63, subpart M. 61 FR at 4588.

EPA specifically stated that, as a result of the change in definition of VOC, EPA's perc dry cleaning control technology guideline no longer has the legal status of a control technology guideline for ozone control and States are no longer required to have rules based on EPA's perc dry cleaning control technology guideline. 61 FR at 4590. EPA also stated that it would no longer enforce measures controlling perc as part of a federally-approved ozone SIP. 61 FR at 4590. EPA emphasized, however, that if a state had taken reduction credit for measures controlling perc as part of an ozone control plan, the state would need to submit new reduction measures as necessary to account for the loss of those reduction credits. 61 FR at 4590.

In response to the exclusion of perc from the definition of VOC in the Federal Clean Air Act, the State of Oregon, Division of Environmental Quality (ODEQ) revised its rules to make Oregon's definition of VOC consistent with the Federal definition. EPA previously approved this change to the definition of VOC as revision to the Oregon SIP. *See* 63 FR 24935 (May 6, 1998). On December 7, 2001, in response to the change in the Federal and state definition of VOC, ODEQ repealed its control technology guideline for perc dry cleaning systems contained in Oregon Administrative Rules (OAR) 340–232–0240, Perchloroethylene Dry Cleaning. ODEQ also repealed the related definitions and provisions in OAR chapter 340, Division 232. ODEQ submitted this repeal of its control technology guideline for perc dry cleaning systems to EPA as a formal SIP submission on December 2, 2002. As part of its submittal, ODEQ showed that it had not taken any credit for emission reductions associated with perc in any of its attainment or maintenance plans. ODEQ also noted that it had adopted by reference the Federal NESHAP for Perchloroethylene Air Emission Standards for Dry Cleaning Facilities, 40 CFR part 63, subpart M (perc dry cleaning NESHAP), and had in fact expanded the universe of sources subject to the perc dry cleaning NESHAP as a matter of State law. See OAR 340–244–0220(3) (Federal Regulations Adopted by Reference). This makes the regulation of perc dry cleaners in Oregon more stringent than Federal law requires.

II. This Action

EPA is approving revisions to OAR chapter 340, Division 232, which removes requirements for perc dry cleaning systems, as well as related definitions and provisions, from the Oregon SIP. As discussed above, as a result of EPA's change to the definition of VOC, there is no Federal requirement to regulate perc as part of a State's ozone control strategy. ODEQ's rule for perc in OAR 340–232–0240 was based on EPA's control technology guideline for perc dry cleaners and is therefore no longer required. ODEQ has demonstrated that it has not taken any reduction credits for measures controlling perc as part of any of its ozone attainment or maintenance plans. ODEQ therefore does not need to submit any replacement reduction measures in connection with the removal of the perc dry cleaning rules from its SIP.

As discussed above, although emissions from perc dry cleaners will no longer be regulated in Oregon for ozone control, such emissions will continue to be regulated in Oregon as hazardous air pollutants under the Federal perc dry cleaning NESHAP, which ODEQ has adopted as a matter of State law for an expanded universe of sources. *See* OAR 340–244–0220(3). Maintaining the SIP rules for perc is not needed for ozone control and would be largely duplicative of these NESHAP requirements. For these reasons, EPA is approving the repeal of the perc dry cleaning rule and the related definitions and provisions in OAR chapter 340, Division 232 from the Oregon SIP.

III. Oregon Notice Provision

ORS 468.126, which remains unchanged since EPA last approved Oregon's SIP, prohibits ODEQ from imposing a penalty for violation of an air, water or solid waste permit unless the source has been provided five days' advanced written notice of the violation and has not come into compliance or submitted a compliance schedule within that five-day period. By its terms, the statute does not apply to Oregon's Title V program or to any program if application of the notice provision would disqualify the program from Federal delegation. Oregon has previously confirmed that, because application of the notice provision would preclude EPA approval of the Oregon SIP, no advance notice is required for violation of SIP requirements.

IV. Scope of EPA Approval

Oregon has not demonstrated authority to implement and enforce the Oregon Administrative Rules within ''Indian Country'' as defined in 18 U.S.C. 1151. ''Indian country'' is defined under 18 U.S.C. 1151 as: (1) All land within the limits of any Indian reservation under the jurisdiction of the United States Government, notwithstanding the issuance of any patent, and including rights-of-way

running through the reservation, (2) all dependent Indian communities within the borders of the United States, whether within the original or subsequently acquired territory thereof, and whether within or without the limits of a State, and (3) all Indian allotments, the Indian titles to which have not been extinguished, including rights-of-way running through the same. Under this definition, EPA treats as reservations trust lands validly set aside for the use of a Tribe even if the trust lands have not been formally designated as a reservation. Therefore, this SIP approval does not extend to ''Indian Country'' in Oregon. *See* CAA sections 110(a)(2)(A) (SIP shall include enforceable emission limits), 110(a)(2)(E)(i) (State must have adequate authority under State law to carry out SIP), and 172(c)(6) (nonattainment SIPs shall include enforceable emission limits).

V. Direct Final Action

EPA is publishing this action without a prior proposal because EPA views this as a noncontroversial amendment and anticipates no adverse comments. In the proposed rules section of this **Federal Register** publication, however, EPA is publishing a separate document that will serve as the proposal to approve the SIP revision should relevant adverse comments be filed. This direct final rule is effective on January 31, 2005 without further notice, unless EPA receives adverse comment by January 3, 2005. If adverse comment is received, EPA will publish a timely withdrawal of the direct final rule in the **Federal Register** and inform the public that the rule did not take effect. All public comments received will then be addressed in a subsequent final rule based on the proposed rule. EPA will not institute a second comment period on this action. Any parties interested in commenting must do so at this time. Please note that if EPA receives adverse comment on an amendment, paragraph, or section of this rule, EPA may adopt as final those provisions of the rule that are not the subject of an adverse comment.

VI. Statutory and Executive Order Reviews

Under Executive Order 12866 (58 FR 51735, October 4, 1993), this action is not a ''significant regulatory action'' and therefore is not subject to review by the Office of Management and Budget. For this reason, this action is also not subject to Executive Order 13211, ''Actions Concerning Regulations That Significantly Affect Energy Supply, Distribution, or Use'' (66 FR 28355, May 22, 2001). This action merely approves State law as meeting Federal requirements and imposes no additional requirements beyond those imposed by State law. Accordingly, the Administrator certifies that this rule will not have a significant economic impact on a substantial number of small entities under the Regulatory Flexibility Act (5 U.S.C. 601 *et seq.*). Because this rule approves pre-existing requirements under State law and does not impose any additional enforceable duty beyond that required by state law, it does not contain any unfunded mandate or significantly or uniquely affect small governments, as described in the Unfunded Mandates Reform Act of 1995 (Pub. L. 104–4).

This rule also does not have tribal implications because it will not have a substantial direct effect on one or more Indian tribes, on the relationship between the Federal Government and Indian tribes, or on the distribution of power and responsibilities between the Federal Government and Indian tribes, as specified by Executive Order 13175 (65 FR 67249, November 6, 2000). This action also does not have Federalism implications because it does not have substantial direct effects on the States, on the relationship between the national government and the States, or on the distribution of power and responsibilities among the various levels of government, as specified in Executive Order 13132 (64 FR 43255, August 10, 1999). This action merely approves a state rule implementing a Federal standard, and does not alter the relationship or the distribution of power and responsibilities established in the Clean Air Act. This rule also is not subject to Executive Order 13045 ''Protection of Children from Environmental Health Risks and Safety Risks'' (62 FR 19885, April 23, 1997), because it is not economically significant.

In reviewing SIP submissions, EPA's role is to approve state choices, provided that they meet the criteria of the Clean Air Act. In this context, in the absence of a prior existing requirement for the State to use voluntary consensus standards (VCS), EPA has no authority to disapprove a SIP submission for failure to use VCS. It would thus be inconsistent with applicable law for EPA, when it reviews a SIP submission, to use VCS in place of a SIP submission that otherwise satisfies the provisions of the Clean Air Act. Thus, the requirements of section 12(d) of the National Technology Transfer and Advancement Act of 1995 (15 U.S.C. 272 note) do not apply. This rule does not impose an information collection burden under the provisions of the Paperwork Reduction Act of 1995 (44 U.S.C. 3501 *et seq.*).

The Congressional Review Act, 5 U.S.C. 801 *et seq.*, as added by the Small Business Regulatory Enforcement Fairness Act of 1996, generally provides that before a rule may take effect, the agency promulgating the rule must submit a rule report, which includes a copy of the rule, to each House of the Congress and to the Comptroller General of the United States. EPA will submit a report containing this rule and other required information to the U.S. Senate, the U.S. House of Representatives, and the Comptroller General of the United States prior to publication of the rule in the **Federal Register**. A major rule cannot take effect until 60 days after it is published in the **Federal Register**. This action is not a ''major rule'' as defined by 5 U.S.C. 804(2).

Under section 307(b)(1) of the Clean Air Act, petitions for judicial review of this action must be filed in the United States Court of Appeals for the appropriate circuit by January 31, 2005. Filing a petition for reconsideration by the Administrator of this final rule does not affect the finality of this rule for the purposes of judicial review nor does it extend the time within which a petition for judicial review may be filed, and shall not postpone the effectiveness of such rule or action. This action may not be challenged later in proceedings to enforce its requirements. (*See* section 307(b)(2).)

List of Subjects in 40 CFR Part 52

Environmental protection, Air pollution control, Incorporation by reference, Intergovernmental relations, Ozone, Reporting and recordkeeping requirements, Volatile organic compounds.

Dated: October 29, 2004.

Richard Albright,

Acting Regional Administrator, Region 10.

■ Chapter I, title 40 of the Code of Federal Regulations is amended as follows:

PART 52—[AMENDED]

■ 1. The authority citation for part 52 continues to read as follows:

Authority: 42 U.S.C. 7401 *et seq.*

Subpart MM—Oregon

■ 2. Section 52.1970 is amended in paragraph (c)(139) by removing the number ''232–0240'' and by adding paragraph (c)(143) to read as follows:

§ 52.1970 Identification of plan.

* * * * *

(c) * * *

(143) On December 2, 2002, the Oregon Department of Environmental Quality submitted a SIP revision to repeal the Perchloroethylene Dry Cleaning rule and revise related parts of the Introduction and Definitions sections of Division 232.

(i) Incorporation by reference.

(A) The following sections of the Oregon Administrative Rules 340: 232–0010 and 232–0030, as effective October 14, 1999.

[FR Doc. 04–26476 Filed 11–30–04; 8:45 am]

BILLING CODE 6560–50–P

DEPARTMENT OF COMMERCE

National Oceanic and Atmospheric Administration

50 CFR Parts 222 and 223

[Docket No. 041124330–4330–01; I.D. 111904C]

RIN 0648–AS91

Sea Turtle Conservation; Shrimp Trawling Requirements

AGENCY: National Marine Fisheries Service (NMFS), National Oceanic and Atmospheric Administration (NOAA), Commerce.

ACTION: Temporary rule.

SUMMARY: NMFS issues this temporary authorization for a period of 30 days, to allow the use of limited tow times by shrimp trawlers as an alternative to the use of Turtle Excluder Devices (TEDs) in the state waters of Alabama and the state waters of Louisiana from the Mississippi/Louisiana border to a line at 90°03′00″ West longitude (approximately the west end of Grand Isle). This action is necessary because environmental conditions as a result of Hurricane Ivan are hampering the fishermen's ability to use TEDs effectively.

DATES: Effective from November 26, 2004 through December 27, 2004.

ADDRESSES: Requests for copies of the Environmental Assessment on this action should be addressed to the Chief, Marine Mammal Division, Office of Protected Resources, NMFS, 1315 East-West Highway, Silver Spring, MD 20910.

FOR FURTHER INFORMATION CONTACT: Michael Barnette, 727–570–5794, or Barbara A. Schroeder, 301–713–1401.

SUPPLEMENTARY INFORMATION:

Background

All sea turtles that occur in U.S. waters are listed as either endangered or threatened under the Endangered Species Act of 1973 (ESA). The Kemp's ridley (*Lepidochelys kempii*), leatherback (*Dermochelys coriacea*), and hawksbill (*Eretmochelys imbricata*) turtles are listed as endangered. The loggerhead (*Caretta caretta*) and green (*Chelonia mydas*) turtles are listed as threatened, except for breeding populations of green turtles in Florida and on the Pacific coast of Mexico, which are listed as endangered.

Sea turtles are incidentally taken and killed as a result of numerous activities, including fishery trawling activities in the Gulf of Mexico and along the Atlantic seaboard. Under the ESA and its implementing regulations, the taking of sea turtles is prohibited, with exceptions identified in 50 CFR 223.206(d), or according to the terms and conditions of a biological opinion issued under section 7 of the ESA, or according to an incidental take permit issued under section 10 of the ESA. The incidental taking of turtles during shrimp or summer flounder trawling is exempted from the taking prohibition of section 9 of the ESA if the conservation measures specified in the sea turtle conservation regulations (50 CFR 223) are followed. The regulations require most shrimp trawlers and summer flounder trawlers operating in the southeastern United States (Atlantic area, Gulf area, and summer flounder sea turtle protection area, see 50 CFR 223.206) to have a NMFS-approved TED installed in each net that is rigged for fishing to provide for the escape of sea turtles. TEDs currently approved by NMFS include single-grid hard TEDs and hooped hard TEDs conforming to a generic description, the flounder TED, and one type of soft TED the Parker soft TED (see 50 CFR 223.207).

TEDs incorporate an escape opening, usually covered by a webbing flap, that allows sea turtles to escape from trawl nets. To be approved by NMFS, a TED design must be shown to be 97 percent effective in excluding sea turtles during testing based upon specific testing protocols (50 CFR 223.207(e)(1)). Most approved hard TEDs are described in the regulations (50 CFR 223.207(a)) according to generic criteria based upon certain parameters of TED design, configuration, and installation, including height and width dimensions of the TED opening through which the turtles escape.

The regulations governing sea turtle take prohibitions and exemptions provide for the use of limited tow times as an alternative to the use of TEDs for vessels with certain specified characteristics or under certain special circumstances. The provisions of 50 CFR 223.206(d)(3)(ii) specify that the NOAA Assistant Administrator for Fisheries (AA) may authorize compliance with tow time restrictions as an alternative to the TED requirement if the AA determines that the presence of algae, seaweed, debris, or other special environmental conditions in a particular area makes trawling with TED-equipped nets impracticable. The provisions of 50 CFR 223.206(d)(3)(i) specify the maximum tow times that may be used when tow-time limits are authorized as an alternative to the use of TEDs. The tow times may be no more than 55 minutes from April 1 through October 31 and no more than 75 minutes from November 1 through March 31, as measured from the time that the trawl doors enter the water until they are removed from the water. These tow time limits are designed to minimize the level of mortality of sea turtles that are captured by trawl nets not equipped with TEDs.

Recent Events

On September 27, 28, and 29, 2004, the NOAA Fisheries' Southeast Regional Administrator received requests from the Marine Fisheries Division of the Alabama Department of Conservation and Natural Resources (ADCNR), the Mississippi Department of Marine Resources (MDMR), and the Louisiana Department of Wildlife and Fisheries (LDWF), respectively, to allow the use of tow times as an alternative to TEDs in state waters due to the presence of excessive storm-related debris on the fishing grounds as a result of Hurricane Ivan. Subsequent to these requests, NOAA Fisheries issued a 30-day variance of the TED requirements from October 12 through November 11, 2004.

On November 15, 2004, the NOAA Fisheries' Southeast Regional Administrator received requests from the Marine Fisheries Division of the ADCNR and LDWF for an additional 30-day period allowing the use of tow times as an alternative to TEDs in state waters due to the presence of excessive storm-related debris that is still present on the fishing grounds as a result of Hurricane Ivan. After an investigation, the ADCNR and LDWF have determined that this debris continues to affect the fishermen's ability to use TEDs effectively. When a TED is clogged with debris, it can no longer catch shrimp effectively nor can it effectively exclude turtles. Alabama and Louisiana have stated that their marine enforcement agencies will increase patrols to enforce the tow time restrictions.

NOAA Fisheries gear technicians interviewed fishermen and surveyed parts of the affected areas in Alabama,

Mississippi, and Louisiana. The interviews and surveys conducted by the gear technicians indicate that problems with debris exist in Alabama and Louisiana state waters, which are likely to affect the effectiveness of TEDs. Debris did not appear to be a significant problem throughout the majority of Mississippi state waters.

Special Environmental Conditions

The AA finds that debris washed into the state waters of Alabama and the state waters of Louisiana from the Mississippi/Louisiana border to a line at 90°03′00″ West longitude (approximately the west end of Grand Isle) by Hurricane Ivan has created special environmental conditions that make trawling with TED-equipped nets impracticable. Therefore, the AA issues this notification to authorize the use of restricted tow times as an alternative to the use of TEDs in the state waters of Alabama and the state waters of Louisiana from the Mississippi/Louisiana border to a line at 90°03′00″ West longitude (approximately the west end of Grand Isle) for a period of 30 days. Tow times must be limited to no more than 75 minutes measured from the time trawl doors enter the water until they are retrieved from the water. The marine patrols of the affected states are continuing to monitor the situation and will cooperate with NMFS in determining the extent of the ongoing debris problem in this area. Moreover, the affected states have stated that their marine patrols will enforce the restricted tow times. Ensuring compliance with tow time restrictions is critical to effective sea turtle protection, and the commitment from the affected states' marine patrols to enforce tow time restrictions is an important factor enabling NMFS to issue this authorization.

Continued Use of TEDs

NMFS encourages shrimp trawlers in the affected areas to continue to use TEDs if possible, even though they are authorized under this action to use restricted tow times.

NMFS' gear experts have provided several general operational recommendations to fishermen to maximize the debris exclusion ability of TEDs that may allow some fishermen to continue using TEDs without resorting to restricted tow times. To exclude debris, NMFS recommends the use of hard TEDs made of either solid rod or of hollow pipe that incorporate a bent angle at the escape opening, in a bottom-opening configuration. In addition, the installation angle of a hard TED in the trawl extension is an important performance element in excluding debris from the trawl. High installation angles can result in debris clogging the bars of the TED; NMFS recommends an installation angle of 45°, relative to the normal horizontal flow of water through the trawl, to optimize the TED's ability to exclude turtles and debris. Furthermore, the use of accelerator funnels, which are allowable modifications to hard TEDs, is not recommended in areas with heavy amounts of debris or vegetation. Lastly, the webbing flap that is usually installed to cover the turtle escape opening may be modified to help exclude debris quickly: the webbing flap can either be cut horizontally to shorten it so that it does not overlap the frame of the TED or be slit in a fore-and-aft direction to facilitate the exclusion of debris. The use of the double cover flap TED will also aid in debris exclusion.

All of these recommendations represent legal configurations of TEDs for shrimpers fishing in the affected areas. This action does not authorize any other departure from the TED requirements, including any illegal modifications to TEDs. In particular, if TEDs are installed in trawl nets, they may not be sewn shut.

Alternative to Required Use of TEDs

The authorization provided by this rule applies to all shrimp trawlers that would otherwise be required to use TEDs in accordance with the requirements of 50 CFR 223.206(d)(2) who are operating in the state waters of Alabama and the state waters of Louisiana from the Mississippi/Louisiana border to a line at 90°03′00″ West longitude (approximately the west end of Grand Isle) for a period of 30 days. Instead of the required use of TEDs, shrimp trawlers may opt to comply with the sea turtle conservation regulations by using restricted tow times, as prescribed above.

Alternative to Required Use of TEDs; Termination

The AA, at any time, may withdraw or modify this temporary authorization to use tow time restrictions in lieu of TEDs, through publication of a rule in the **Federal Register**, if necessary, to ensure adequate protection of endangered and threatened sea turtles. Under this procedure, the AA may modify the affected area or impose any necessary additional or more stringent measures, including more restrictive tow times, synchronized tow times, or withdrawal of the authorization if the AA determines that the alternative authorized by this rule is not sufficiently protecting turtles or no longer needed. The AA may also terminate this authorization if compliance cannot be monitored effectively. This authorization will expire automatically on December 27, 2004, unless it is explicitly extended through another notification published in the **Federal Register**.

Classification

This action has been determined to be not significant for purposes of E.O. 12866.

The AA has determined that this action is necessary to respond to an environmental situation to allow more efficient fishing for shrimp, while providing adequate protection for endangered and threatened sea turtles pursuant to the ESA and applicable regulations.

Pursuant to 5 U.S.C. 553(b)(3)(B), the AA finds that there is good cause to waive prior notice and opportunity to comment on this rule. The AA finds that unusually high amounts of debris are creating special environmental conditions that make trawling with TED-equipped nets impracticable. Prior notice and opportunity to comment are impracticable and contrary to the public interest in this instance because providing notice and comment would prevent NMFS from executing its functions to protect threatened and endangered sea turtles. Additionally, debris would likely move out of the area before NMFS could implement this rule to protect sea turtles, thereby rendering the action obsolete.

For the same reasons, the AA finds that there is good cause to waive the 30-day delay in effective date pursuant to 5 U.S.C. 553(d)(3). Further, because this short-term exemption to the requirement to use TEDs relieves a restriction, the AA finds that this temporary rule should not be subject to a 30-day delay in effective date, pursuant to 5 U.S.C. 553(d)(1). Therefore, NMFS is making the rule effective November 26, 2004 through December 27, 2004.

Since prior notice and an opportunity for public comment are not required to be provided for this action by 5 U.S.C. 553, or by any other law, the analytical requirements of 5 U.S.C. 601 *et seq.* are inapplicable.

The AA prepared an Environmental Assessment (EA) for this rule. Copies of the EA are available (see **ADDRESSES**).

Dated: November 26, 2004.

John Oliver,

Deputy Assistant Administrator for Operations, National Marine Fisheries Service.

[FR Doc. 04–26500 Filed 11–26–04; 3:12 pm]

BILLING CODE 3510–22–S

DEPARTMENT OF COMMERCE

National Oceanic and Atmospheric Administration

50 CFR Part 679

[Docket No. 031124287–4060–02; I.D. 112304C]

Fisheries of the Exclusive Economic Zone Off Alaska; Reallocation of Pacific Cod in the Bering Sea and Aleutian Islands Management Area

AGENCY: National Marine Fisheries Service (NMFS), National Oceanic and Atmospheric Administration (NOAA), Commerce.

ACTION: Reallocation.

SUMMARY: NMFS is reallocating the projected unused amount of Pacific cod from catcher vessels using pot gear to vessels using trawl gear and catcher processor vessels using hook-and-line gear in the BSAI. These actions are necessary to allow the 2004 total allowable catch (TAC) of Pacific cod to be harvested.

DATES: Effective November 26, 2004, until 2400 hours, A.l.t., December 31, 2004.

FOR FURTHER INFORMATION CONTACT: Josh Keaton, 907–586–7228.

SUPPLEMENTARY INFORMATION: NMFS manages the groundfish fishery in the BSAI according to the Fishery Management Plan for Groundfish Fishery of the Bering Sea and Aleutian Islands Area (FMP) prepared by the North Pacific Fishery Management Council under authority of the Magnuson-Stevens Fishery Conservation and Management Act. Regulations governing fishing by U.S. vessels in accordance with the FMP appear at subpart H of 50 CFR part 600 and 50 CFR part 679.

The 2004 final harvest specifications for groundfish of the BSAI (69 FR 9242, February 27, 2004), established the Pacific cod TAC as 199,338 metric tons (mt). Pursuant to § 679.20(a)(7)(i)(A), 3,987 mt was allocated to vessels using jig gear, 101,662 mt to vessels using hook-and-line or pot gear, and 93,689 mt to vessels using trawl gear. The share of the Pacific cod TAC allocated to trawl gear was further allocated 50 percent to catcher vessels and 50 percent to catcher/processor vessels (§ 679.20(a)(7)(i)(B)). The share of the Pacific cod TAC allocated to hook-and-line or pot gear was further allocated 80 percent to catcher/processor vessels using hook-and-line gear; 0.3 percent to catcher vessels using hook-and-line gear; 3.3 percent to catcher/processor vessels using pot gear; 15 percent to catcher vessels using pot gear; and 1.4 percent to catcher vessels less than 60 ft (18.3 meters) length overall that use either hook-and-line or pot gear (§ 679.20(a)(7)(i)(C)).

On October 15, 2004, 12,700 mt of Pacific cod from the trawl gear allocation and 2,000 mt from the jig gear allocation was reallocated to vessels using hook-and-line gear and vessels using pot gear (69 FR 61607, October 20, 2004).

As of November 16, 2004, the Administrator, Alaska Region, NMFS (Regional Administrator), has determined that catcher vessels using pot gear will not be able to harvest 3,960 mt of Pacific cod allocated to those vessels under § 679.20(a)(7)(i)(C) and the subsequent reallocation on October 15, 2004 (69 FR 61607, October 20, 2004). Therefore, in accordance with § 679.20(a)(7)(ii)(C)(*2*), NMFS apportions 3,960 mt of Pacific cod from catcher vessels using pot gear to vessels using trawl gear and catcher/processor vessels using hook-and-line gear.

The harvest specifications for Pacific cod included in the harvest specifications for groundfish in the BSAI (69 FR 9242, February 27, 2004) are revised as follows: 97,795 mt to catcher/processor vessels using hook-and-line gear, 11,735 mt to catcher vessels using pot gear, 41,431 mt to catcher/processor vessels using trawl gear, and 40,717 mt to catcher vessels using trawl gear.

Classification

This action responds to the best available information recently obtained from the fishery. The Assistant Administrator for Fisheries, NOAA, (AA), finds good cause to waive the requirement to provide prior notice and opportunity for public comment pursuant to the authority set forth at 5 U.S.C. 553(b)(B) as such a requirement is impracticable and contrary to the public interest. This requirement is impracticable and contrary to the public interest as it would prevent NMFS from responding to the most recent fisheries data in a timely fashion and would delay the reallocation of Pacific cod specified for catcher vessels using pot gear to vessels using trawl gear and catcher processor vessels using hook-and-line in the BSAI and therefore would cause disruption to the industry by requiring unnecessary closures, disruption within the fishing industry, and the potential for regulatory discards when the current allocations are reached. This reallocation will relieve a restriction on the industry and allow for the orderly conduct and efficient operation of this fishery.

The AA also finds good cause to waive the 30-day delay in the effective date of this action under 5 U.S.C. 553(d)(3). This finding is based upon the reasons provided above for waiver of prior notice and opportunity for public comment.

This action is required by § 679.20 and is exempt from review under Executive Order 12866.

Authority: 16 U.S.C. 1801 *et seq.*

Dated: November 24, 2004.

Alan D. Risenhoover,

Acting Director, Office of Sustainable Fisheries, National Marine Fisheries Service.

[FR Doc. 04–26499 Filed 11–26–04; 3:12 pm]

BILLING CODE 3510–22–S

Proposed Rules

Federal Register
Vol. 69, No. 230
Wednesday, December 1, 2004

This section of the FEDERAL REGISTER contains notices to the public of the proposed issuance of rules and regulations. The purpose of these notices is to give interested persons an opportunity to participate in the rule making prior to the adoption of the final rules.

DEPARTMENT OF TRANSPORTATION (DOT)

Federal Aviation Administration

14 CFR Part 39

[Docket No. FAA–2004–19757; Directorate Identifier 2001–NM–273–AD]

RIN 2120–AA64

Airworthiness Directives; British Aerospace Model BAe 146 and Model Avro 146–RJ Series Airplanes

AGENCY: Federal Aviation Administration (FAA), DOT.

ACTION: Notice of proposed rulemaking (NPRM).

SUMMARY: The FAA proposes to supersede an existing airworthiness directive (AD) that applies to certain British Aerospace Model BAe 146 and Model Avro 146–RJ series airplanes. The existing AD currently requires a one-time measurement of the thickness of the outer links on the side stays of the main landing gear (MLG), and related investigative and corrective actions as necessary; and provides for replacement of a thin outer link with a new or serviceable part in lieu of certain related investigative inspections. This new proposed AD would instead require repetitive inspections for cracking of the outer links on the MLG side stays, and corrective actions if necessary. This new action would also expand the applicability, provide for optional terminating action for the repetitive inspections, and reduce the repetitive inspection interval. This proposed AD is prompted by new crack findings on airplanes not subject to the existing AD, and the determination that the profile gauge's slipping over the outer link profile is not a factor in the identified unsafe condition. We are proposing this AD to prevent cracking of the outer links of the MLG side stays, which could result in failure of a side stay and consequent collapse of the landing gear.

DATES: We must receive comments on this proposed AD by January 3, 2005.

ADDRESSES: Use one of the following addresses to submit comments on this proposed AD.

- *DOT Docket Web site:* Go to *http://dms.dot.gov* and follow the instructions for sending your comments electronically.
- *Government-wide rulemaking Web site:* Go to *http://www.regulations.gov* and follow the instructions for sending your comments electronically.
- *Mail:* Docket Management Facility; U.S. Department of Transportation, 400 Seventh Street SW., Nassif Building, room PL–401, Washington, DC 20590.
- *Fax:* (202) 493–2251.
- *Hand Delivery:* Room PL–401 on the plaza level of the Nassif Building, 400 Seventh Street SW., Washington, DC, between 9 a.m. and 5 p.m., Monday through Friday, except Federal holidays.

For service information identified in this proposed AD, contact British Aerospace Regional Aircraft American Support, 13850 Mclearen Road, Herndon, Virginia 20171.

You can examine the contents of this AD docket on the Internet at *http://dms.dot.gov*, or in person at the Docket Management Facility, U.S. Department of Transportation, 400 Seventh Street SW., room PL–401, on the plaza level of the Nassif Building, Washington, DC.

FOR FURTHER INFORMATION CONTACT: *Technical information:* Todd Thompson, Aerospace Engineer, International Branch, ANM–116, FAA, Transport Airplane Directorate, 1601 Lind Avenue, SW., Renton, Washington 98055–4056; telephone (425) 227–1175; fax (425) 227–1149.

Plain language information: Marcia Walters, *marcia.walters@faa.gov.*

SUPPLEMENTARY INFORMATION:

Docket Management System (DMS)

The FAA has implemented new procedures for maintaining AD dockets electronically. As of May 17, 2004, new AD actions are posted on DMS and assigned a docket number. We track each action and assign a corresponding directorate identifier. The DMS AD docket number is in the form ''Docket No. FAA–2004–99999.'' The Transport Airplane Directorate identifier is in the form ''Directorate Identifier 2004–NM–999–AD.'' Each DMS AD docket also lists the directorate identifier (''Old Docket Number'') as a cross-reference for searching purposes.

Comments Invited

We invite you to submit any relevant written data, views, or arguments regarding this proposed AD. Send your comments to an address listed under **ADDRESSES**. Include ''Docket No. FAA–2004–19757; Directorate Identifier 2001–NM–273–AD'' at the beginning of your comments. We specifically invite comments on the overall regulatory, economic, environmental, and energy aspects of the proposed AD. We will consider all comments received by the closing date and may amend the proposed AD in light of those comments.

We will post all comments we receive, without change, to *http://dms.dot.gov*, including any personal information you provide. We will also post a report summarizing each substantive verbal contact with FAA personnel concerning this proposed AD. Using the search function of our docket web site, anyone can find and read the comments in any of our dockets, including the name of the individual who sent the comment (or signed the comment on behalf of an association, business, labor union, etc.). You can review the DOT's complete Privacy Act Statement in the **Federal Register** published on April 11, 2000 (65 FR 19477–78), or you can visit *http://dms.dot.gov*.

We are reviewing the writing style we currently use in regulatory documents. We are interested in your comments on whether the style of this document is clear, and your suggestions to improve the clarity of our communications that affect you. You can get more information about plain language at *http://www.faa.gov/language* and *http://www.plainlanguage.gov*.

Examining the Docket

You can examine the AD docket on the Internet at *http://dms.dot.gov*, or in person at the Docket Management Facility office between 9 a.m. and 5 p.m., Monday through Friday, except Federal holidays. The Docket Management Facility office (telephone (800) 647–5227) is located on the plaza level of the Nassif Building at the DOT street address stated in the **ADDRESSES** section. Comments will be available in the AD docket shortly after the DMS receives them.

Discussion

On August 10, 1999, we issued AD 99–17–12, amendment 39–11260 (64 FR 45870, August 23, 1999), for certain British Aerospace Model BAe 146 and Model Avro 146–RJ series airplanes. That AD requires a one-time measurement to determine the thickness of the outer links of the side stays of the main landing gear (MLG), and corrective actions, if necessary. That AD also provides for replacement of a thin outer link with a new or serviceable part in lieu of certain related investigative inspections. That action was prompted by mandatory continuing airworthiness information that was issued by the Civil Aviation Authority (CAA), which is the airworthiness authority for the United Kingdom. At that time, the CAA had advised that the MLG side stays were susceptible to cracking due to the insufficient thickness of the outer links. We issued that AD to prevent this cracking, which could result in failure of a side stay and consequent collapse of the landing gear.

Actions Since Existing AD was Issued

Since we issued AD 99–17–12, cracks have been found on the outer link shoulders of several MLG side stays. The cracks have been attributed to inadequate greasing, which generated high bearing torque. One of those affected side stays, which had a thicker web, was not subject to AD 99–17–12.

In addition, the existing AD requires certain corrective actions if the profile gauge slips over the top edge of the outer link profile when the link's thickness is measured. We have since determined that the profile gauge's slipping over the outer link profile is not a factor in the identified unsafe condition.

Relevant Service Information

The manufacturer has issued BAE Systems (Operations) Limited Inspection Service Bulletin ISB.32–156, Revision 1, dated July 3, 2001, which describes procedures for repetitive visual inspections for signs of cracks through the paint on the outer link of the MLG side stays. Depending on crack length, corrective actions may include repetitive inspections for cracks of the spherical bearings/greaseways and replacement of the outer link of the MLG side stays with a new or serviceable part. The service bulletin recommends contacting the manufacturer for additional instructions for crack repair. The CAA classified this service bulletin as mandatory and issued British airworthiness directive 004–05–2001 to ensure the continued airworthiness of these airplanes in the United Kingdom.

The optional accomplishment of the actions specified in either Messier-Dowty Limited Service Bulletin 146–32–152, or the combination of Messier-Dowty Limited Repair Scheme 450187952 and Messier-Dowty Limited Service Bulletin 146–32–144, eliminates the need for the repetitive inspections.

Secondary service information references are listed in the following table:

SECONDARY SERVICE INFORMATION

BAE Systems (Operations) Limited Inspection Service Bulletin ISB.32–1536 refers to—	As an additional source of service information for—
Messier-Dowty Service Bulletin 146–32–144	Adding a new label.
Messier-Dowty Service Bulletin 146–32–147, dated May 29, 2001	Inspecting the MLG side stays.
Messier-Dowty Service Bulletin 146–32–152 and BAE Systems Service Bulletin 32–162–70657CD.	Repositioning the lubrication fitting and label on the outer link.
Messier-Dowty Repair Scheme 450187952	Installing a second lubrication fitting.

FAA's Determination and Requirements of the Proposed AD

These airplane models are manufactured in France and are type certificated for operation in the United States under the provisions of § 21.29 of the Federal Aviation Regulations (14 CFR 21.29) and the applicable bilateral airworthiness agreement. Pursuant to this bilateral airworthiness agreement, the DGAC has kept the FAA informed of the situation described above. We have examined the DGAC's findings, evaluated all pertinent information, and determined that AD action is necessary for airplanes of this type design that are certificated for operation in the United States.

This proposed AD would supersede AD 99–17–12 to require repetitive inspections for cracks of the outer links on the MLG side stays. The proposed AD would also expand the applicability and provide for optional terminating action for the repetitive inspections. The actions would be required to be accomplished in accordance with BAE Systems (Operations) Limited Inspection Service Bulletin ISB.32–156, described previously, except as discussed under ''Differences Between Proposed AD and Service Bulletin.''

Differences Between Proposed AD and Service Bulletin

The applicability of the British airworthiness directive specifies ''side stays as listed in Messier-Dowty Service Bulletin 146–32–145.'' We have determined, in conjunction with the CAA and the manufacturer, that Messier-Dowty Service Bulletin 146–32–147 properly lists all the affected side stays by serial number and/or part number. Therefore, this proposed AD refers to Service Bulletin 146–32–147 for the additional information regarding the applicability.

Unlike the procedures described in Service Bulletin ISB.32–156, this proposed AD would not permit further flight if cracks are detected in a flange. We have determined that, because of the safety implications and consequences associated with such cracking, any cracked flange must be repaired or modified before further flight.

Service Bulletin ISB.32–156 recommends contacting the manufacturer for instructions on how to repair certain conditions, but this proposed AD would require repairing those conditions using a method approved by the FAA or the CAA (or its delegated agent). In light of the type of repair that would be required to address the unsafe condition, and consistent with existing bilateral airworthiness agreements, we have determined that, for this proposed AD, a repair approved by the FAA or the CAA would be acceptable for compliance with this proposed AD.

The Accomplishment Instructions of Messier-Dowty Service Bulletin 146–32–147 describe procedures for reporting the inspection findings to the manufacturer; however, this proposed AD would not require a report.

Costs of Compliance

The following table provides the estimated costs for U.S. operators to comply with this proposed AD.

ESTIMATED COSTS

Action	Work hours	Average hourly labor rate	Parts	Cost per airplane	Number of U.S.-registered airplanes	Fleet cost
Inspection	1	$65	None	$65, per inspection cycle	60	$3,900, per inspection cycle.

Regulatory Findings

We have determined that this proposed AD would not have federalism implications under Executive Order 13132. This proposed AD would not have a substantial direct effect on the States, on the relationship between the national Government and the States, or on the distribution of power and responsibilities among the various levels of government.

For the reasons discussed above, I certify that the proposed regulation:

1. Is not a ''significant regulatory action'' under Executive Order 12866;

2. Is not a ''significant rule'' under the DOT Regulatory Policies and Procedures (44 FR 11034, February 26, 1979); and

3. Will not have a significant economic impact, positive or negative, on a substantial number of small entities under the criteria of the Regulatory Flexibility Act.

We prepared a regulatory evaluation of the estimated costs to comply with this proposed AD. See the **ADDRESSES** section for a location to examine the regulatory evaluation.

List of Subjects in 14 CFR Part 39

Air transportation, Aircraft, Aviation safety, Safety.

The Proposed Amendment

Accordingly, under the authority delegated to me by the Administrator, the FAA proposes to amend 14 CFR part 39 as follows:

PART 39—AIRWORTHINESS DIRECTIVES

1. The authority citation for part 39 continues to read as follows:

Authority: 49 U.S.C. 106(g), 40113, 44701.

§ 39.13 [Amended]

2. The FAA amends § 39.13 by removing amendment 39–11260 (64 FR 45870, August 23, 1999) and adding the following new airworthiness directive (AD):

BAE Systems (Operations) Limited (Formerly British Aerospace Regional Aircraft): Docket No. FAA–2004–19757; Directorate Identifier 2001–NM–273–AD.

Comments Due Date

(a) The Federal Aviation Administration must receive comments on this AD action by January 3, 2005.

Affected ADs

(b) This AD supersedes AD 99–17–12, amendment 39–11260 (64 FR 45870, August 23, 1999).

Applicability

(c) This AD applies to Model BAe 146 and Avro 146–RJ series airplanes, certificated in any category, having any side stay listed in Messier-Dowty Service Bulletin 146–32–147, dated May 29, 2001.

Unsafe Condition

(d) This AD was prompted by new crack findings on airplanes not subject to the existing AD, and the determination that the profile gauge's slipping over the outer link profile is not a factor in the identified unsafe condition. We are issuing this AD to prevent cracking of the outer links of the MLG side stays, which could result in failure of a side stay and consequent collapse of the landing gear.

Compliance

(e) You are responsible for having the actions required by this AD performed within the compliance times specified, unless the actions have already been done.

Inspection

(f) At the applicable time specified in paragraph (f)(1) or (f)(2) of this AD: Perform a detailed inspection for cracks of the outer links on the MLG side stays, in accordance with BAE Systems (Operations) Limited Inspection Service Bulletin ISB.32–156, Revision 1, dated July 3, 2001. Repair cracks before further flight in accordance with the service bulletin. Thereafter, repeat the inspection at intervals not to exceed 2,000 flight cycles, until the actions specified in paragraph (g) of this AD have been done. Although the service bulletin specifies to report certain information to the manufacturer, this AD does not require a report.

(1) If the number of flight cycles accumulated on the side stay can be positively determined: Inspect before the accumulation of 2,000 total flight cycles on the side stay, or within 500 flight cycles after the effective date of this AD, whichever occurs later.

(2) If the number of flight cycles accumulated on the side stay cannot be positively determined: Inspect within 500 flight cycles after the effective date of this AD.

Note 1: For the purposes of this AD, a detailed inspection is: ''An intensive examination of a specific item, installation, or assembly to detect damage, failure, or irregularity. Available lighting is normally supplemented with a direct source of good lighting at an intensity deemed appropriate. Inspection aids such as mirror, magnifying lenses, etc., may be necessary. Surface cleaning and elaborate procedures may be required.''

Note 2: BAE Inspection Service Bulletin ISB.32–156 refers to Messier-Dowty Service Bulletin 146–32–147, dated May 29, 2001, as an additional source of service information for the inspection.

Optional Terminating Action

(g) Relocation of each affected grease nipple to the upper surface of the outer link of the MLG side stays terminates the repetitive inspection requirements of this AD, if the relocation action is done in accordance with paragraph 2.C. of the Accomplishment Instructions of BAE Systems (Operations) Limited Inspection Service Bulletin ISB.32–156, Revision 1, dated July 3, 2001.

Note 3: BAE Service Bulletin ISB.32–156 refers to BAE Systems Service Bulletin 32–162–70657CD, Messier-Dowty repair scheme 450187952, and Messier-Dowty Service Bulletin 146–32–144 as additional sources of service information for accomplishment of the actions associated with the relocation specified in paragraph (g) of this AD.

Parts Installation

(h) As of the effective date of this AD, no person may install on any airplane an MLG side stay having a part number listed in paragraph 1.A. of Messier-Dowty Service Bulletin 146–32–147, dated May 29, 2001, unless that part has been inspected and all applicable related investigative and corrective actions have been performed in accordance with the requirements of this AD.

Alternative Methods of Compliance (AMOCs)

(i) The Manager, International Branch, ANM–116, Transport Airplane Directorate, FAA, has the authority to approve AMOCs for this AD, if requested in accordance with the procedures found in 14 CFR 39.19.

Related Information

(j) British airworthiness directive 004–05–2001 also addresses the subject of this AD.

Issued in Renton, Washington, on November 17, 2004.

Ali Bahrami,

Manager, Transport Airplane Directorate, Aircraft Certification Service.

[FR Doc. 04–26498 Filed 11–30–04; 8:45 am]

BILLING CODE 4910–13–P

DEPARTMENT OF TRANSPORTATION (DOT)

Federal Aviation Administration

14 CFR Part 39

[Docket No. FAA–2004–19750; Directorate Identifier 2003–NM–192–AD]

RIN 2120–AA64

Airworthiness Directives; Boeing Model 737–600, –700, –700C, –800, and –900 Series Airplanes

AGENCY: Federal Aviation Administration (FAA), DOT.

ACTION: Notice of proposed rulemaking (NPRM).

SUMMARY: The FAA proposes to supersede an existing airworthiness directive (AD) that applies to all Boeing Model 737–600, –700, –700C, –800, and –900 series airplanes. That AD currently requires either determining exposure to runway deicing fluids containing potassium formate, or performing repetitive inspections of certain electrical connectors in the wheel well of the main landing gear (MLG) for corrosion, and follow-on actions. This proposed AD would add a new inspection requirement and related corrective actions. This proposed AD is prompted by additional reports indicating that significant corrosion of the electrical connectors in the wheel well of the MLG has also been found on airplanes that land on runways treated with deicing fluids containing potassium acetate. We are proposing this AD to prevent corrosion and subsequent moisture ingress into the electrical connectors, which could result in an electrical short and consequent incorrect functioning of critical airplane systems essential to safe flight and landing of the airplane, including fire warning systems.

DATES: We must receive comments on this proposed AD by January 18, 2005.

ADDRESSES: Use one of the following addresses to submit comments on this proposed AD.

- DOT Docket Web site: Go to *http://dms.dot.gov* and follow the instructions for sending your comments electronically.
- Government-wide rulemaking Web site: Go to *http://www.regulations.gov* and follow the instructions for sending your comments electronically.
- Mail: Docket Management Facility; U.S. Department of Transportation, 400 Seventh Street SW., Nassif Building, room PL–401, Washington, DC 20590.
- Fax: (202) 493–2251.
- Hand Delivery: Room PL–401 on the plaza level of the Nassif Building, 400 Seventh Street SW., Washington, DC, between 9 a.m. and 5 p.m., Monday through Friday, except Federal holidays.

For the service information identified in this proposed AD contact Boeing Commercial Airplane Group, P.O. Box 3707, Seattle, Washington 98124–2207.

You can examine the contents of this AD docket on the Internet at *http://dms.dot.gov*, or at the Docket Management Facility, U.S. Department of Transportation, 400 Seventh Street SW., room PL–401, on the plaza level of the Nassif Building, Washington, DC.

FOR FURTHER INFORMATION CONTACT: *Technical Information:* Binh Tran, Aerospace Engineer, Systems and Equipment Branch, ANM–130S, FAA, Seattle Aircraft Certification Office, 1601 Lind Avenue, SW., Renton, Washington 98055–4056; telephone (425) 917–6485; fax (425) 917–6590.

Plain language information: Marcia Walters, *marcia.walters@faa.gov*.

SUPPLEMENTARY INFORMATION:

Docket Management System (DMS)

The FAA has implemented new procedures for maintaining AD dockets electronically. As of May 17, 2004, new AD actions are posted on DMS and assigned a docket number. We track each action and assign a corresponding directorate identifier. The DMS AD docket number is in the form ''Docket No. FAA–2004–99999.'' The Transport Airplane Directorate identifier is in the form ''Directorate Identifier 2004–NM–999–AD.'' Each DMS AD docket also lists the directorate identifier (''Old Docket Number'') as a cross-reference for searching purposes.

Comments Invited

We invite you to submit any written relevant data, views, or arguments regarding this proposed AD. Send your comments to an address listed under **ADDRESSES.** Include ''Docket No. FAA–2004–19750; Directorate Identifier 2003–NM–192–AD'' at the beginning of your comments. We specifically invite comments on the overall regulatory, economic, environmental, and energy aspects of the proposed AD. We will consider all comments received by the closing date and may amend the proposed AD in light of those comments.

We will post all comments we receive, without change, to *http://dms.dot.gov*, including any personal information you provide. We will also post a report summarizing each substantive verbal contact with FAA personnel concerning this proposed AD. Using the search function of our docket Web site, anyone can find and read the comments in any of our dockets, including the name of the individual who sent the comment (or signed the comment on behalf of an association, business, labor union, etc.). You can review the DOT's complete Privacy Act Statement in the **Federal Register** published on April 11, 2000 (65 FR 19477–78), or you may visit *http://dms.dot.gov*.

We are reviewing the writing style we currently use in regulatory documents. We are interested in your comments on whether the style of this document is clear, and your suggestions to improve the clarity of our communications that affect you. You can get more information about plain language at *http://www.faa.gov/language* and *http://www.plainlanguage.gov*.

Examining the Docket

You can examine the AD docket in person at the Docket Management Facility office between 9 a.m. and 5 p.m., Monday through Friday, except Federal holidays. The Docket Management Facility office (telephone (800) 647–5227) is on the plaza level of the Nassif Building at the DOT street address stated in the **ADDRESSES** section. Comments will be available in the AD docket shortly after the DMS receives them.

Discussion

On July 29, 2002, we issued AD 2002–16–03, amendment 39–12842 (67 FR 52396, August 12, 2002), for all Boeing Model 737–600, –700, –700C, –800, and –900 series airplanes. That AD requires either determining exposure to runway deicing fluids containing potassium formate or performing repetitive inspections of certain electrical connectors in the wheel well of the main landing gear (MLG) for corrosion, and follow-on actions. That AD was prompted by reports of significant corrosion of the electrical connectors in the main wheel well. We issued that AD to prevent such corrosion, which could result in incorrect functioning of critical airplane systems essential to safe flight and landing of the airplane, including fire warning systems.

Actions Since Existing AD was Issued

Since we issued AD 2002–16–03, we have received reports of significant corrosion of the electrical connectors located in the wheel well of the MLG on Model 737 series airplanes that land on runways treated with deicing fluids containing potassium acetate. Investigation revealed that the corrosive effects of potassium acetate on the electrical connectors are similar to those of potassium formate, and the

requirements in the existing AD do not account for exposure to deicing fluids containing potassium acetate. Significant corrosion can lead to loss of the cadmium plating of the electrical connectors and subsequent moisture ingress into the connectors, which could result in an electrical short and consequent incorrect functioning of critical airplane systems essential to safe flight and landing of the airplane, including fire warning systems.

Revised Service Information

We have reviewed Boeing Alert Service Bulletin 737–24A1148, Revision 1, dated July 10, 2003 (the original issue was referenced in the existing AD as the appropriate source of service information for accomplishment of the actions). The service bulletin describes procedures for inspecting electrical connectors (including the contacts and backshells) of the line replaceable unit (LRU) in the wheel well of the MLG for corrosion, and related corrective actions if necessary. Signs of corrosion are the presence of moisture, corrosion pits, or white-colored material buildup on the connectors; black or reddish discoloration on the contacts; or loss of the olive-drab conversion coating on the backshells. The related corrective actions include cleaning the LRU connectors and applying corrosion inhibiting compound (CIC) if no corrosion is found, and replacing the LRU with a new LRU and applying CIC if corrosion is found. The service bulletin also recommends an operational test of the affected systems after doing the applicable actions. Accomplishing the actions specified in the revised service information is intended to adequately address the unsafe condition.

FAA's Determination and Requirements of the Proposed AD

We have evaluated all pertinent information and identified an unsafe condition that is likely to exist or develop on other products of this same type design. Therefore, we are proposing this AD, which would supersede AD 2002–16–03. This proposed AD would require either determining exposure to runway deicing fluids containing potassium formate and/or potassium acetate, or performing repetitive inspections of certain electrical connectors in the wheel well of the main landing gear for corrosion, and significant/corrective actions if necessary. This proposed AD would require you to use the service information described previously to perform these actions, except as discussed under ''Difference Between the Proposed AD and Service Information.''

Difference Between the Proposed AD and Service Information

The service bulletin specifies an ''examination'' for corrosion of the electrical connectors in the MLG wheel well. For the purposes of this AD, we have determined that the procedures in the service bulletin constitute a ''detailed inspection.'' Note 1 of this proposed AD defines that inspection.

Work Hour Rate Increase

We have reviewed the figures we have used over the past several years to calculate AD costs to operators. To account for various inflationary costs in the airline industry, we find it necessary to increase the labor rate used in these calculations from $60 per work hour to $65 per work hour. The cost impact information, below, reflects this increase in the specified hourly labor rate.

Costs of Compliance

This proposed AD would affect about 587 airplanes of U.S. registry. The new determination of airplane exposure would take about 1 work hour per airplane, at an average labor rate of $65 per work hour. Based on these figures, the estimated cost of the actions specified in this proposed AD for U.S. operators is $38,155, or $65 per airplane, per cycle.

Regulatory Findings

We have determined that this proposed AD would not have federalism implications under Executive Order 13132. This proposed AD would not have a substantial direct effect on the States, on the relationship between the national Government and the States, or on the distribution of power and responsibilities among the various levels of government.

For the reasons discussed above, I certify that the proposed regulation:

1. Is not a ''significant regulatory action'' under Executive Order 12866;

2. Is not a ''significant rule'' under the DOT Regulatory Policies and Procedures (44 FR 11034, February 26, 1979); and

3. Will not have a significant economic impact, positive or negative, on a substantial number of small entities under the criteria of the Regulatory Flexibility Act.

We prepared a regulatory evaluation of the estimated costs to comply with this proposed AD. See the **ADDRESSES** section for a location to examine the regulatory evaluation.

List of Subjects in 14 CFR Part 39

Air transportation, Aircraft, Aviation safety, Safety.

The Proposed Amendment

Accordingly, under the authority delegated to me by the Administrator, the FAA proposes to amend 14 CFR part 39 as follows:

PART 39—AIRWORTHINESS DIRECTIVES

1. The authority citation for part 39 continues to read as follows:

Authority: 49 U.S.C. 106(g), 40113, 44701.

§ 39.13 [Amended]

2. The FAA amends § 39.13 by removing amendment 39–12842 (67 FR 52396, August 12, 2002) and adding the following new airworthiness directive (AD):

Boeing: Docket No. FAA–2004–19750; Directorate Identifier 2003–NM–192–AD.

Comments Due Date

(a) The Federal Aviation Administration must receive comments on this airworthiness directive (AD) action by January 18, 2005.

Affected ADs

(b) This AD supersedes AD 2002–16–03, amendment 39–12842.

Applicability

(c) This AD applies to all Model 737–600, –700, –700C, –800, and –900 series airplanes; certificated in any category.

Unsafe Condition

(d) This AD was prompted by additional reports indicating that significant corrosion of the electrical connectors in the wheel well of the MLG has also been found on airplanes that land on runways treated with deicing fluids containing potassium acetate. We are issuing this AD to prevent corrosion and subsequent moisture ingress into the electrical connectors, which could result in an electrical short and consequent incorrect functioning of critical airplane systems essential to safe flight and landing of the airplane, including fire warning systems.

Compliance

(e) You are responsible for having the actions required by this AD performed within the compliance times specified, unless the actions have already been done.

Determine Airplane Exposure/Significant & Corrective Actions

(f) Except as required by paragraph (f)(1)(ii) of this AD: Within 12 months after the effective date of this AD, do the actions required by either paragraph (f)(1) or (f)(2) of this AD.

(1) Determine airplane exposure to runway deicing fluids containing potassium formate or potassium acetate by reviewing airport data on the type of components in the deicing fluid used at airports that support airplane operations.

(i) For airplanes that have not been exposed to potassium formate or potassium acetate: Repeat the requirements in paragraph (f) of this AD thereafter at intervals not to exceed 12 months.

(ii) For airplanes that have been exposed to potassium formate or potassium acetate: Before further flight, do the inspection required by paragraph (f)(2) of this AD.

(2) Do a detailed inspection of the electrical connectors, including the contacts and backshells, of the line replaceable unit (LRU) in the wheel well of the MLG for corrosion by doing all the actions in accordance with the Accomplishment Instructions of Boeing Alert Service Bulletin 737–24A1148, Revision 1, dated July 10, 2003. Do any significant/corrective actions before further flight in accordance with the service bulletin. Repeat the actions required by paragraph (f)(1) of this AD thereafter at intervals not to exceed 12 months.

Note 1: For the purposes of this AD, a detailed inspection is defined as: ''An intensive visual examination of a specific structural area, system, installation, or assembly to detect damage, failure, or irregularity. Available lighting is normally supplemented with a direct source of good lighting at intensity deemed appropriate by the inspector. Inspection aids such as mirror, magnifying lenses, etc., may be used. Surface cleaning and elaborate access procedures may be required.''

Alternative Methods of Compliance (AMOCs)

(g)(1) The Manager, Seattle Aircraft Certification Office (ACO), FAA, has the authority to approve AMOCs for this AD, if requested in accordance with the procedures found in 14 CFR 39.19.

(2) AMOCs approved previously in accordance with AD 2002–16–03, amendment 39–12842, are not approved as AMOCs with this AD.

Issued in Renton, Washington, on November 17, 2004.

Ali Bahrami,

Manager, Transport Airplane Directorate, Aircraft Certification Service.

[FR Doc. 04–26497 Filed 11–30–04; 8:45 am]

BILLING CODE 4910–13–P

DEPARTMENT OF TRANSPORTATION

Federal Aviation Administration

14 CFR Part 39

[Docket No. FAA–2004–19751; Directorate Identifier 2002–NM–59–AD]

RIN 2120–AA64

Airworthiness Directives; BAE Systems (Operations) Limited (Jetstream) Model 4101 Airplanes

AGENCY: Federal Aviation Administration (FAA), DOT.

ACTION: Notice of proposed rulemaking (NPRM).

SUMMARY: The FAA proposes to adopt a new airworthiness directive (AD) for all BAE Systems (Operations) Limited (Jetstream) Model 4101 airplanes. This proposed AD would require repetitive detailed inspections of the aft fuselage frames for any discrepancies, and any applicable corrective actions. This proposed AD is prompted by reports of corrosion found on the aft fuselage frames due to the ingress of water or liquid. We are proposing this AD to detect and correct corrosion of the aft fuselage frames, which could result in reduced structural integrity of the fuselage.

DATES: We must receive comments on this proposed AD by January 3, 2005.

ADDRESSES: Use one of the following addresses to submit comments on this proposed AD.

- DOT Docket Web site: Go to *http://dms.dot.gov* and follow the instructions for sending your comments electronically.
- Government-wide rulemaking Web site: Go to *http://www.regulations.gov* and follow the instructions for sending your comments electronically.
- Mail: Docket Management Facility, U.S. Department of Transportation, 400 Seventh Street SW., Nassif Building, Room PL–401, Washington, DC 20590.
- By fax: (202) 493–2251.
- Hand Delivery: Room PL–401 on the plaza level of the Nassif Building, 400 Seventh Street SW., Washington, DC, between 9 a.m. and 5 p.m., Monday through Friday, except Federal holidays.

For service information identified in this proposed AD, contact British Aerospace Regional Aircraft American Support, 13850 Mclearen Road, Herndon, Virginia 20171.

You can examine the contents of this AD docket on the Internet at *http://dms.dot.gov,* or in person at the Docket Management Facility, U.S. Department of Transportation, 400 Seventh Street SW., Room PL–401, on the plaza level of the Nassif Building, Washington, DC.

FOR FURTHER INFORMATION CONTACT: *Technical information:* Todd Thompson, Aerospace Engineer, International Branch, ANM–116, FAA, Transport Airplane Directorate, 1601 Lind Avenue, SW., Renton, Washington 98055–4056; telephone (425) 227–1175; fax (425) 227–1149.

Plain language information: Marcia Walters, *marcia.walters@faa.gov.*

SUPPLEMENTARY INFORMATION:

Docket Management System (DMS)

The FAA has implemented new procedures for maintaining AD dockets electronically. As of May 17, 2004, new AD actions are posted on DMS and assigned a docket number. We track each action and assign a corresponding directorate identifier. The DMS AD docket number is in the form ''Docket No. FAA–2004–99999.'' The Transport Airplane Directorate identifier is in the form ''Directorate Identifier 2004–NM–999–AD.'' Each DMS AD docket also lists the directorate identifier (''Old Docket Number'') as a cross-reference for searching purposes.

Comments Invited

We invite you to submit any relevant written data, views, or arguments regarding this proposed AD. Send your comments to an address listed under **ADDRESSES.** Include ''Docket No. FAA–2004–19751; Directorate Identifier 2002–NM–59–AD'' at the beginning of your comments. We specifically invite comments on the overall regulatory, economic, environmental, and energy aspects of the proposed AD. We will consider all comments submitted by the closing date and may amend the proposed AD in light of those comments.

We will post all comments we receive, without change, to *http://dms.dot.gov,* including any personal information you provide. We will also post a report summarizing each substantive verbal contact with FAA personnel concerning this proposed AD. Using the search function of our docket Web site, anyone can find and read the comments in any of our dockets, including the name of the individual who sent the comment (or signed the comment on behalf of an association, business, labor union, etc.). You can review the DOT's complete Privacy Act Statement in the **Federal Register** published on April 11, 2000 (65 FR 19477–78), or you can visit *http://dms.dot.gov.*

We are reviewing the writing style we currently use in regulatory documents. We are interested in your comments on whether the style of this document is clear, and your suggestions to improve the clarity of our communications that affect you. You can get more information about plain language at *http://www.faa.gov/language* and *http://www.plainlanguage.gov.*

Examining the Docket

You can examine the AD docket on the Internet at *http://dms.dot.gov,* or in person at the Docket Management Facility office between 9 a.m. and 5 p.m., Monday through Friday, except Federal holidays. The Docket Management Facility office (telephone (800) 647–5227) is located on the plaza level of the Nassif Building at the DOT street address stated in the **ADDRESSES**

section. Comments will be available in the AD docket shortly after the DMS receives them.

Discussion

The Civil Aviation Authority (CAA), which is the airworthiness authority for the United Kingdom, notified us that an unsafe condition may exist on all BAE Systems (Operations) Limited (Jetstream) Model 4101 airplanes. The CAA advises that corrosion has been found along aft fuselage frames. This corrosion occurs on frame areas below floor panel level in the vicinity of the toilet, galley, and rear baggage door due to the ingress of water or liquid. Corrosion of the aft fuselage frames, if not detected and corrected in a timely manner, could result in reduced structural integrity of the fuselage.

Relevant Service Information

BAE Systems (Operations) Limited has issued Service Bulletin J41–53–051, dated January 25, 2002; and Revision 1, dated May 2, 2003. The service bulletins describe procedures for doing repetitive detailed visual inspections of the aft fuselage frames for discrepancies (*i.e.*, corrosion, soft spots, and suspected corrosion), doing any applicable corrective action, and submitting inspection reports to the manufacturer. The corrective actions include repairing any corrosion found during the inspections; replacing any soft floor panels; reapplying any sealant, membrane, or tape removed during the inspection; and contacting the manufacturer for disposition of damage outside of limits.

Accomplishing the actions specified in the service information is intended to adequately address the unsafe condition. The CAA mandated the service information and issued British airworthiness directive 003–01–2002 to ensure the continued airworthiness of these airplanes in the United Kingdom.

FAA's Determination and Requirements of the Proposed AD

This airplane model is manufactured in the United Kingdom and is type certificated for operation in the United States under the provisions of section 21.29 of the Federal Aviation Regulations (14 CFR 21.29) and the applicable bilateral airworthiness agreement. Pursuant to this bilateral airworthiness agreement, the CAA has kept the FAA informed of the situation described above. We have examined the CAA's findings, evaluated all pertinent information, and determined that we need to issue an AD for products of this type design that are certificated for operation in the United States.

Therefore, we are proposing this AD, which would require accomplishing the actions specified in the service information described previously, except as discussed under ''Differences Between the AD and the Service Bulletins.''

Differences Between the Proposed AD and the Service Bulletins

The service bulletins specify that you may contact the manufacturer for instructions on how to repair corrosion outside limits defined in the service bulletins, but this proposed AD would require you to repair those conditions using a method that we or the CAA (or its delegated agent) approve. In light of the type of repair that would be required to address the unsafe condition, and consistent with existing bilateral airworthiness agreements, we have determined that, for this proposed AD, a repair we or the CAA approve would be acceptable for compliance with this proposed AD.

Operators should also note that, although the Accomplishment Instructions of the service bulletins describe procedures for submitting inspection reports, this proposed AD would not require those actions. We do not need this information from operators.

Costs of Compliance

This proposed AD would affect about 57 airplanes of U.S. registry. The proposed inspections would take about 30 work hours per airplane, at an average labor rate of $65 per work hour. Based on these figures, the estimated cost of the proposed AD for U.S. operators is $111,150, or $1,950 per airplane, per inspection cycle.

Regulatory Findings

We have determined that this proposed AD would not have federalism implications under Executive Order 13132. This proposed AD would not have a substantial direct effect on the States, on the relationship between the National Government and the States, or on the distribution of power and responsibilities among the various levels of government.

For the reasons discussed above, I certify that the proposed regulation:

1. Is not a ''significant regulatory action'' under Executive Order 12866;

2. Is not a ''significant rule'' under the DOT Regulatory Policies and Procedures (44 FR 11034, February 26, 1979); and

3. Will not have a significant economic impact, positive or negative, on a substantial number of small entities under the criteria of the Regulatory Flexibility Act.

We prepared a regulatory evaluation of the estimated costs to comply with this proposed AD. *See* the **ADDRESSES** section for a location to examine the regulatory evaluation.

List of Subjects in 14 CFR Part 39

Air transportation, Aircraft, Aviation safety, Safety.

The Proposed Amendment

Accordingly, under the authority delegated to me by the Administrator, the FAA proposes to amend 14 CFR part 39 as follows:

PART 39—AIRWORTHINESS DIRECTIVES

1. The authority citation for part 39 continues to read as follows:

Authority: 49 U.S.C. 106(g), 40113, 44701.

§ 39.13 [Amended]

2. The FAA amends § 39.13 by adding the following new airworthiness directive (AD):

BAE Systems (Operations) Limited (Formerly British Aerospace Regional Aircraft): Docket No. FAA–2004–19751; Directorate Identifier 2002–NM–59–AD.

Comments Due Date

(a) The Federal Aviation Administration must receive comments on this AD action by January 3, 2005.

Affected ADs

(b) None.

Applicability

(c) This AD applies to all BAE Systems (Operations) Limited (Jetstream) Model 4101 airplanes, certificated in any category.

Unsafe Condition

(d) This AD was prompted by reports of corrosion found on the aft fuselage frames due to the ingress of water or liquid. We are issuing this AD to detect and correct corrosion of the aft fuselage frames, which could result in reduced structural integrity of the fuselage.

Compliance

(e) You are responsible for having the actions required by this AD performed within the compliance times specified, unless the actions have already been done.

Inspection and Corrective Actions

(f) Within 12 months after the effective date of this AD, do a detailed inspection of the aft fuselage frames for any discrepancies (*i.e.*, corrosion, soft spots, and suspected corrosion), and any applicable corrective actions, in accordance with the Accomplishment Instructions of BAE Systems (Operations) Limited Service Bulletin J41–53–051, dated January 25, 2002; or Revision 1, dated May 2, 2003; except as provided by paragraphs (g) and (i) of this AD. Do any applicable corrective action before further flight.

Note 1: For the purposes of this AD, a detailed inspection is ''an intensive examination of a specific item, installation, or assembly to detect damage, failure, or irregularity. Available lighting is normally supplemented with a direct source of good lighting at an intensity deemed appropriate. Inspection aids such as mirrors magnifying lenses, etc. may be necessary. Surface cleaning and elaborate procedures may be required.''

(g) If any corrosion outside the limits defined in the service bulletin is detected: Before further flight, repair the corrosion according to a method approved by either the Manager, International Branch, ANM–116, FAA, Transport Airplane Directorate; or the Civil Aviation Authority (or its delegated agent).

Repetitive Inspection

(h) Repeat the inspection and do applicable corrective actions required by paragraph (f) of this AD at intervals not to exceed 24 months.

No Reporting

(i) Although the service bulletins referenced in this AD specify to submit inspection reports to the manufacturer, this AD does not include that requirement.

Alternative Methods of Compliance (AMOCs)

(j) The Manager, International Branch, ANM–116, FAA, Transport Airplane Directorate, FAA, has the authority to approve AMOCs for this AD, if requested in accordance with the procedures found in 14 CFR 39.19.

Related Information

(k) British airworthiness directive 003–01–2002 also addresses the subject of this AD.

Issued in Renton, Washington, on November 17, 2004.

Ali Bahrami,

Manager, Transport Airplane Directorate, Aircraft Certification Service.

[FR Doc. 04–26496 Filed 11–30–04; 8:45 am]

BILLING CODE 4910–13–P

DEPARTMENT OF TRANSPORTATION (DOT)

Federal Aviation Administration

14 CFR Part 39

[Docket No. FAA–2004–19752; Directorate Identifier 2004–NM–170–AD]

RIN 2120–AA64

Airworthiness Directives; Saab Model SAAB SF340A and SAAB 340B Series Airplanes

AGENCY: Federal Aviation Administration (FAA), DOT.

ACTION: Notice of proposed rulemaking (NPRM).

SUMMARY: The FAA proposes to adopt a new airworthiness directive (AD) for certain Saab Model SAAB SF340A and SAAB 340B series airplanes. This proposed AD would require repetitive inspections for wear of the brushes and leads and for loose rivets of the direct current (DC) starter generator, and related investigative/corrective actions if necessary. This proposed AD is prompted by reports of premature failures of the DC starter generator prior to scheduled overhaul. We are proposing this AD to prevent failure of the starter generator, which could cause a low voltage situation in flight and result in increased pilot workload and reduced redundancy of the electrical powered systems.

DATES: We must receive comments on this proposed AD by January 3, 2005.

ADDRESSES: Use one of the following addresses to submit comments on this proposed AD.

- DOT Docket Web site: Go to *http://dms.dot.gov* and follow the instructions for sending your comments electronically.
- Government-wide rulemaking Web site: Go to *http://www.regulations.gov* and follow the instructions for sending your comments electronically.
- Mail: Docket Management Facility, U.S. Department of Transportation, 400 Seventh Street SW., Nassif Building, room PL–401, Washington, DC 20590.
- By fax: (202) 493–2251.
- Hand Delivery: Room PL–401 on the plaza level of the Nassif Building, 400 Seventh Street SW., Washington, DC, between 9 a.m. and 5 p.m., Monday through Friday, except Federal holidays.

For service information identified in this proposed AD, contact Saab Aircraft AB, SAAB Aircraft Product Support, S–581.88, Linköping, Sweden.

You can examine the contents of this AD docket on the Internet at *http://dms.dot.gov,* or in person at the Docket Management Facility, U.S. Department of Transportation, 400 Seventh SW., room PL–401, on the plaza level of the Nassif Building, Washington, DC. This docket number is FAA–2004–19752; the directorate identifier for this docket is 2004–NM–170–AD.

FOR FURTHER INFORMATION CONTACT: *Technical information:* Dan Rodina, Aerospace Engineer, International Branch, ANM–116, FAA, Transport Airplane Directorate, 1601 Lind Avenue, SW., Renton, Washington 98055–4056; telephone (425) 227–2125; fax (425) 227–1149.

Plain language information: Marcia Walters, *marcia.walters@faa.gov.*

SUPPLEMENTARY INFORMATION:

Docket Management System (DMS)

The FAA has implemented new procedures for maintaining AD dockets electronically. As of May 17, 2004, new AD actions are posted on DMS and assigned a docket number. We track each action and assign a corresponding directorate identifier. The DMS AD docket number is in the form ''Docket No. FAA–2004–99999.'' The Transport Airplane Directorate identifier is in the form ''Directorate Identifier 2004–NM–999–AD.'' Each DMS AD docket also lists the directorate identifier (''Old Docket Number'') as a cross-reference for searching purposes.

Comments Invited

We invite you to submit any relevant written data, views, or arguments regarding this proposed AD. Send your comments to an address listed under **ADDRESSES.** Include ''Docket No. FAA–2004–19752; Directorate Identifier 2004–NM–170–AD'' at the beginning of your comments. We specifically invite comments on the overall regulatory, economic, environmental, and energy aspects of the proposed AD. We will consider all comments submitted by the closing date and may amend the proposed AD in light of those comments.

We will post all comments we receive, without change, to *http://dms.dot.gov,* including any personal information you provide. We will also post a report summarizing each substantive verbal contact with FAA personnel concerning this proposed AD. Using the search function of our docket Web site, anyone can find and read the comments in any of our dockets, including the name of the individual who sent the comment (or signed the comment on behalf of an association, business, labor union, etc.). You can review the DOT's complete Privacy Act Statement in the **Federal Register** published on April 11, 2000 (65 FR 19477–78), or you can visit *http://dms.dot.gov.*

We are reviewing the writing style we currently use in regulatory documents. We are interested in your comments on whether the style of this document is clear, and your suggestions to improve the clarity of our communications that affect you. You can get more information about plain language at *http://www.faa.gov/language* and *http://www.plainlanguage.gov.*

Examining the Docket

You can examine the AD docket on the Internet at *http://dms.dot.gov,* or in person at the Docket Management Facility office between 9 a.m. and 5 p.m., Monday through Friday, except Federal holidays. The Docket Management Facility office (telephone (800) 647–5227) is located on the plaza

level of the Nassif Building at the DOT street address stated in the **ADDRESS** section. Comments will be available in the AD docket shortly after the DMS receives them.

Discussion

The Luftfartsverket (LFV), which is the airworthiness authority for Sweden, notified us that an unsafe condition may exist on certain Saab Model SAAB SF340A and SAAB 340B series airplanes. The LFV advises that it has received reports of premature failures of the direct current (DC) starter generator. Failure of the starter generator could cause a low voltage situation in flight and result in increased pilot workload and reduced redundancy of the electrical powered systems.

Relevant Service Information

Saab has issued Service Bulletin 340–24–035, dated July 5, 2004. The service bulletin describes procedures for repetitive visual inspections for wear of the brushes and leads and for loose rivets of the DC starter generator. The service bulletin also specifies replacing the starter generator with a new or serviceable starter generator for brush wear that is outside certain specified limits or if any loose rivet is found. The LFV mandated the service information and issued Swedish airworthiness directive 1–196 R1, effective July 15, 2004, to ensure the continued airworthiness of these airplanes in Sweden.

The Saab service bulletin references Goodrich Service Information Letter 23080–03X–24–01, dated July 1, 2004, as an additional source of service information.

FAA's Determination and Requirements of the Proposed AD

These airplane models are manufactured in Sweden and are type certificated for operation in the United States under the provisions of § 21.29 of the Federal Aviation Regulations (14 CFR 21.29) and the applicable bilateral airworthiness agreement. Pursuant to this bilateral airworthiness agreement, the LFV has kept the FAA informed of the situation described above. We have examined the LFV's findings, evaluated all pertinent information, and determined that we need to issue an AD for products of this type design that are certificated for operation in the United States.

Therefore, we are proposing this AD, which would require accomplishing the actions specified in the Saab service information described previously.

Interim Action

This is considered to be interim action until final action is identified, at which time we may consider further rulemaking.

Costs of Compliance

This proposed AD would affect about 170 airplanes of U.S. registry. The proposed actions would take about 1 work hour per airplane, at an average labor rate of $65 per work hour. Based on these figures, the estimated cost of the proposed AD for U.S. operators is $11,050, per inspection cycle, or $65 per airplane, per inspection cycle.

Regulatory Findings

We have determined that this proposed AD would not have federalism implications under Executive Order 13132. This proposed AD would not have a substantial direct effect on the States, on the relationship between the national Government and the States, or on the distribution of power and responsibilities among the various levels of government.

For the reasons discussed above, I certify that the proposed regulation:

1. Is not a ''significant regulatory action'' under executive Order 12866;

2. Is not a ''significant rule'' under the DOT Regulatory Policies and Procedures (44 FR 11034, February 26, 1979); and

3. Will not have a significant economic impact, positive or negative, on a substantial number of small entities under the criteria of the Regulatory Flexibility Act.

We prepared a regulatory evaluation of the estimated costs to comply with this proposed AD. See the **ADDRESSES** section for a location to examine the regulatory evaluation.

List of Subjects in 14 CFR Part 39

Air transportation, Aircraft, Aviation safety, Safety.

The Proposed Amendment

Accordingly, under the authority delegated to me by the Administrator, the FAA proposes to amend 14 CFR part 39 as follows:

PART 39—AIRWORTHINESS DIRECTIVES

1. The authority citation for part 39 continues to read as follows:

Authority: 49 U.S.C. 106(g), 40113, 44701.

§ 39.13 [Amended]

2. The FAA amends § 39.13 by adding the following new airworthiness directive (AD):

SAAB Aircraft AB: Docket No. FAA–2004–19752; Directorate Identifier 2004–NM–170–AD.

Comments Due Date

(a) The Federal Aviation Administration must receive comments on this AD action by January 3, 2005.

Applicability

(b) This AD applies to Saab Model SAAB SF340A series airplanes having serial numbers 004 through 159 inclusive, and model SAAB 340B series airplanes having serial numbers 160 through 367 inclusive; certificated in any category; on which Saab Service Bulletin SB 340–24–026 (Modification 2533) has not been implemented.

Unsafe Condition

(c) This AD was prompted by reports of premature failures of the direct current (DC) starter generator prior to scheduled overhaul. We are issuing this AD to prevent failure of the starter generator, which could cause a low voltage situation in flight and result in increased pilot workload and reduced redundancy of the electrical powered systems.

Compliance

(d) You are responsible for having the actions required by this AD performed within the compliance times specified, unless the actions have already been done.

Inspections for Wear of the DC Starter Generator Brushes and Leads

(e) For generators overhauled in accordance with Maintenance Review Board (MRB) Task 243104: Before 800 flight hours since the last overhaul or within 100 flight hours after the effective date of this AD, whichever occurs later, perform a general visual inspection for wear of the DC starter generator brushes and leads, in accordance with Saab Service Bulletin 340–24–0035, dated July 5, 2004.

Note 1: For the purposes of this AD, a general visual inspection is ''a visual examination of an interior or exterior area, installation or assembly to detect obvious damage, failure or irregularity. This level of inspection is made from within touching distance unless otherwise specified. A mirror may be necessary to ensure visual access to all surfaces in the inspection area. This level of inspection is made under normal available lighting conditions such as daylight, hangar lighting, flashlight or drop-light and may require removal or opening of access panels or doors. Stands, ladders or platforms may be required to gain proximity to the area being checked.''

Note 2: Saab Service Bulletin 340–24–035, dated July 5, 2004, references Goodrich Service Information Letter 23080–30X–24–01, dated July 1, 2004, as an additional source of service information.

(1) If the tops of the brush sets are above the top of the brush box, repeat the inspection at intervals not to exceed 800 flight hours.

(2) If the tops of the brush sets are below the top of the brush box, before further flight, measure the brushes and determine the remaining amount of brush life remaining, in accordance with the service bulletin.

(i) If the brush wear is within the limits specified in the service bulletin, repeat the inspection at intervals not to exceed 800 flight hours.

(ii) If the brush wear is outside the limits specified in the service bulletin, before further flight, replace the starter generator with a new or serviceable starter generator, in accordance with the service bulletin.

Inspections for Loose Rivets

(f) For generators overhauled in accordance with MRB task 243104: Before 800 flight hours since last overhaul or within 100 flight hours after the effective date of this AD, whichever occurs later, perform a general visual inspection of each leading wafer brush for loose rivets, in accordance with Saab Service Bulletin 304–24–035, dated July 5, 2004. Repeat the inspections at intervals not to exceed 800 flight hours. If any rivet is loose, before further flight, replace the DC starter generator with a new or serviceable starter generator, in accordance with the service bulletin.

MRB Task 243103 or 243101

(g) For generators overhauled or with brush replacement accomplished in accordance with MRB Task 243103 or 243101, no action is required by this AD.

Alternative Methods of Compliance (AMOCs)

(h) The Manager, International Branch, ANM–116, FAA, Transport Airplane Directorate, FAA, has the authority to approve AMOCs for this AD, if requested in accordance with the procedures found in 14 CFR 39.19.

Related Information

(i) Swedish airworthiness directive 1–196 R1, effective July 15, 2004, also addresses the subject of this AD.

Issued in Renton, Washington, on November 17, 2004.

Ali Bahrami,

Manager, Transport Airplane Directorate, Aircraft Certification Service.

[FR Doc. 04–26495 Filed 11–30–04; 8:45 am]

BILLING CODE 4910–13–M

DEPARTMENT OF TRANSPORTATION

Federal Aviation Administration

14 CFR Part 39

[Docket No. FAA–2004–19753; Directorate Identifier 2002–NM–264–AD]

RIN 2120–AA64

Airworthiness Directives; Boeing Model 767–200, –300, and –300F Series Airplanes

AGENCY: Federal Aviation Administration (FAA), DOT.

ACTION: Notice of proposed rulemaking (NPRM).

SUMMARY: The FAA proposes to supersede an existing airworthiness directive (AD) for certain Boeing Model 767–200, –300, and –300F series airplanes. That AD currently requires inspections for fatigue cracking of the horizontal stabilizer pivot bulkhead, and repetitive inspections or other follow-on actions. That action also provides a permanent repair, which is optional for airplanes with no cracks, and, if accomplished, ends the repetitive inspections. This proposed AD would require, for airplanes on which the permanent repair is not installed, repetitive inspections of the same and additional inspection locations at new inspection intervals; a one-time torque test; and related investigative and corrective actions. For airplanes on which the permanent repair is installed, this proposed AD would require repetitive inspections of the repaired area and, if necessary, corrective action. This proposed AD is prompted by reports of loose tension bolts and crack indications in the fuselage skin. We are proposing this AD to find and fix fatigue cracking of the horizontal stabilizer pivot bulkhead and adjacent structure, which could result in loss of the horizontal stabilizer.

DATES: We must receive comments on this proposed AD by January 18, 2005.

ADDRESSES: Use one of the following addresses to submit comments on this proposed AD.

- DOT Docket Web site: Go to *http://dms.dot.gov* and follow the instructions for sending your comments electronically.
- Government-wide rulemaking Web site: Go to *http://www.regulations.gov* and follow the instructions for sending your comments electronically.
- Mail: Docket Management Facility; U.S. Department of Transportation, 400 Seventh Street SW., Nassif Building, room PL–401, Washington, DC 20590.
- Fax: (202) 493–2251.
- Hand Delivery: Room PL–401 on the plaza level of the Nassif Building, 400 Seventh Street SW., Washington, DC, between 9 a.m. and 5 p.m., Monday through Friday, except Federal holidays.

You can get the service information identified in this proposed AD from Boeing Commercial Airplanes, P.O. Box 3707, Seattle, Washington 98124–2207.

You may examine the contents of this AD docket on the Internet at *http://dms.dot.gov*, or at the Docket Management Facility, U.S. Department of Transportation, 400 Seventh Street SW., room PL–401, on the plaza level of the Nassif Building, Washington, DC.

FOR FURTHER INFORMATION CONTACT:

Technical information: Suzanne Masterson, Aerospace Engineer, Airframe Branch, ANM–120S, FAA, Seattle Aircraft Certification Office, 1601 Lind Avenue, SW., Renton, Washington 98055–4056; telephone (425) 917–6441; fax (425) 917–6590.

Plain language information: Marcia Walters, *marcia.walters@faa.gov*.

SUPPLEMENTARY INFORMATION:

Docket Management System (DMS)

The FAA has implemented new procedures for maintaining AD dockets electronically. As of May 17, 2004, new AD actions are posted on DMS and assigned a docket number. We track each action and assign a corresponding directorate identifier. The DMS AD docket number is in the form ''Docket No. FAA–2004–99999.'' The Transport Airplane Directorate identifier is in the form ''Directorate Identifier 2004–NM–999–AD.'' Each DMS AD docket also lists the directorate identifier (''Old Docket Number'') as a cross-reference for searching purposes.

Comments Invited

We invite you to submit any written relevant data, views, or arguments regarding this proposed AD. Send your comments to an address listed under **ADDRESSES.** Include ''Docket No. FAA–2004–19753; Directorate Identifier 2002–NM–264–AD'' at the beginning of your comments. We specifically invite comments on the overall regulatory, economic, environmental, and energy aspects of the proposed AD. We will consider all comments received by the closing date and may amend the proposed AD in light of those comments.

We will post all comments we receive, without change, to *http://dms.dot.gov*, including any personal information you provide. We will also post a report summarizing each substantive verbal contact with FAA personnel concerning this proposed AD. Using the search function of our docket Web site, anyone can find and read the comments in any of our dockets, including the name of the individual who sent the comment (or signed the comment on behalf of an association, business, labor union, *etc.*). You may review the DOT's complete Privacy Act Statement in the **Federal Register** published on April 11, 2000 (65 FR 19477–78), or you may visit *http://dms.dot.gov*.

We are reviewing the writing style we currently use in regulatory documents. We are interested in your comments on whether the style of this document is clear, and your suggestions to improve the clarity of our communications that affect you. You can get more information about plain language at

http://www.faa.gov/language and *http://www.plainlanguage.gov*.

Examining the Docket

You may examine the AD docket in person at the Docket Management Facility office between 9 a.m. and 5 p.m., Monday through Friday, except Federal holidays. The Docket Management Facility office (telephone (800) 647–5227) is located on the plaza level of the Nassif Building at the DOT street address stated in the **ADDRESSES** section. Comments will be available in the AD docket shortly after the DMS receives them.

Discussion

On April 27, 2001, we issued AD 2001–09–13, amendment 39–12220 (66 FR 23538, May 9, 2001), for certain Boeing Model 767–200, –300, and –300F series airplanes. That AD requires inspections for fatigue cracking of the horizontal stabilizer pivot bulkhead, and repetitive inspections or other follow-on actions. That AD also provides a permanent repair, which is optional for airplanes with no cracks, and, if accomplished, ends the repetitive inspections. That AD was prompted by reports of fatigue cracking of the horizontal stabilizer pivot bulkhead on several affected airplanes. We issued that AD to find and fix fatigue cracking of the horizontal stabilizer pivot bulkhead and adjacent structure, which could result in loss of the horizontal stabilizer.

Actions Since Existing AD Was Issued

Since we issued AD 2001–09–13, an airplane operator reported three incidents of loose tension bolts at stringer 12A. Another operator reported that there were indications of cracks in the fuselage skin at ''Area 1'' as shown on Sheet 2 of Figure 2 of Boeing Alert Service Bulletin 767–53A0078, Revision 4, dated September 26, 2002.

In addition, the preamble to AD 2001–09–13 said that we were considering further action to require the permanent repair that was an option in that AD. However, further information shows that operators have found cracks at the repaired area. Therefore, we are not requiring the permanent repair from AD 2001–09–13 as a preventive modification in this proposed AD.

Relevant Service Information

We have reviewed Boeing Alert Service Bulletin 767–53A0078, Revision 4, dated September 26, 2002.

The alert service bulletin describes the following procedures for airplanes on which the permanent repair, described in previous revisions of the service bulletin, was not installed:

- Inspections for cracks of the forward and aft outer chord, the splice fitting, the tension fitting, the aft mid chord, and the upper and lower intercostals. The inspection methods include the following, as applicable: Repetitive detailed inspections, surface high frequency eddy current (HFEC) inspections, open-hole HFEC inspections, and low frequency eddy current (LFEC) inspections.
- Corrective action and related investigative action if cracks are found in the forward outer chord. The corrective action is installing a permanent repair. The related investigative action is repetitive inspections of the repaired area.
- Installing a time-limited repair as an alternative to the permanent repair, which includes the related investigative and corrective actions of an additional visual inspection for cracks, and installation of the permanent repair either before further flight after this inspection if cracks are found, or within 3,000 flight cycles or 18 months after the inspection (whichever occurs first), if no cracks are found.
- A torque check of the bolt in the tension fitting, and related investigative and corrective actions. The related investigative action is doing a visual inspection of the bolt and bolt-hole for damage, and an HFEC inspection of the bolt-hole for damage. The corrective action is to contact Boeing for repair data.
- If any crack is found in the aft outer chord, the aft mid chord, the splice fitting, the tension fitting, or the intercostal, the service bulletin recommends that operators contact Boeing for repair data.

For airplanes on which the permanent repair was installed using previous revisions of the service bulletin, Revision 4 of the service bulletin describes procedures for repetitive inspections of the repaired area. The service bulletin recommends that operators contact Boeing for any necessary corrective action.

We have determined that accomplishment of the actions specified in the service information will adequately address the unsafe condition.

FAA's Determination and Requirements of the Proposed AD

We have evaluated all pertinent information and identified an unsafe condition that is likely to exist or develop on other products of this same type design. Therefore, we are proposing this AD, which would supersede AD 2001–09–13. This proposed AD would continue to require inspections for fatigue cracking of the horizontal stabilizer pivot bulkhead, and repetitive inspections or other follow-on actions. For airplanes with cracks, this proposed AD also would continue to require a permanent repair, which is optional for airplanes with no cracks. This proposed AD would require, for airplanes on which the permanent repair is not installed, repetitive inspections of the same and additional inspection locations at new inspection intervals; a one-time torque test; and other related corrective and investigative actions. For airplanes on which the permanent repair is installed, this proposed AD would require repetitive inspections of the repaired area, and corrective action if necessary. This proposed AD would require you to use the service information described previously to perform these actions, except as discussed under ''Difference Between the Proposed AD and the Service Bulletin.''

Difference Between the Proposed AD and the Service Bulletin

The service bulletin specifies that you may contact the manufacturer for instructions on how to repair certain conditions, but this proposed AD would require you to repair those conditions in one of the following ways:

- Using a method that we approve; or
- Using data that meet the type certification basis of the airplane, and that have been approved by a Boeing Company Designated Engineering Representative who has been authorized by the FAA to make such findings.

Changes to Existing AD

This proposed AD would retain all requirements of AD 2001–09–13 with revised repetitive inspection intervals. Since AD 2001–09–13 was issued, the AD format has been revised, and certain paragraphs have been rearranged. As a result, the corresponding paragraph identifiers have changed in this proposed AD, as listed in the following table:

REVISED PARAGRAPH IDENTIFIERS

Requirement in AD 2001–09–13	Corresponding requirement in this proposed AD
Paragraph (a)	paragraph (f).
Paragraph (b)	paragraph (g).
Paragraph (c)	paragraph (h).
Paragraph (d)	paragraph (i).
Paragraph (e)	paragraph (j).
Paragraph (f)	paragraph (p).

In addition, we have changed all references to a ''detailed visual inspection'' in the AD 2001–09–13 to ''detailed inspection'' in this proposed AD, which is defined in Note 1.

We have also changed the applicability of the proposed AD to refer to Revision 4 of the service bulletin rather than to Revision 2, which we referenced in the applicability of AD 2001–09–13. Both revisions of the service bulletin refer to the same airplane line numbers, so airplanes have not been added to the applicability.

Costs of Compliance

This proposed AD would affect about 699 Boeing Model 767–200, –300, and –300F series airplanes worldwide. The following table provides the estimated costs for U.S. operators to comply with this proposed AD.

ESTIMATED COSTS

Action	Work hours	Average labor rate per hour	Parts	Cost per airplane	Number of U.S.-registered airplanes
Inspection (required by AD 2001–09–13).	1	$65	None	$65 (per inspection cycle)	287.
Inspection and torque check (new proposed action).	4	65	None	260 (per inspection cycle)	287.
Post-modification inspection (new proposed action).	6	65	None	390	Those with the permanent repair installed using this proposed AD or AD 2001–09–13.

Regulatory Findings

We have determined that this proposed AD would not have federalism implications under Executive Order 13132. This proposed AD would not have a substantial direct effect on the States, on the relationship between the national Government and the States, or on the distribution of power and responsibilities among the various levels of government.

For the reasons discussed above, I certify that the proposed regulation:

1. Is not a ''significant regulatory action'' under Executive Order 12866;

2. Is not a ''significant rule'' under the DOT Regulatory Policies and Procedures (44 FR 11034, February 26, 1979); and

3. Will not have a significant economic impact, positive or negative, on a substantial number of small entities under the criteria of the Regulatory Flexibility Act.

We prepared a regulatory evaluation of the estimated costs to comply with this proposed AD. See the **ADDRESSES** section for a location to examine the regulatory evaluation.

List of Subjects in 14 CFR Part 39

Air transportation, Aircraft, Aviation safety, Safety.

The Proposed Amendment

Accordingly, under the authority delegated to me by the Administrator, the FAA proposes to amend 14 CFR part 39 as follows:

PART 39—AIRWORTHINESS DIRECTIVES

1. The authority citation for part 39 continues to read as follows:

Authority: 49 U.S.C. 106(g), 40113, 44701.

§ 39.13 [Amended]

2. The FAA amends § 39.13 by removing amendment 39–12220 (66 FR 23538, May 9, 2001) and adding the following new airworthiness directive (AD):

Boeing: Docket No. FAA–2004–19753; Directorate Identifier 2002–NM–264–AD.

Comments Due Date

(a) The Federal Aviation Administration must receive comments on this airworthiness directive (AD) action by January 18, 2005.

Affected ADs

(b) This AD supersedes AD 2001–09–13, amendment 39–12220.

Applicability

(c) This AD applies to Boeing Model 767–200, –300, and –300F series airplanes, as listed in Boeing Alert Service Bulletin 767–53A0078, Revision 4, dated September 26, 2002; certificated in any category.

Unsafe Condition

(d) This AD was prompted by reports of loose tension bolts, and crack indications in the fuselage skin. We are issuing this AD to find and fix fatigue cracking of the horizontal stabilizer pivot bulkhead and adjacent structure, which could result in loss of the horizontal stabilizer.

Compliance

(e) You are responsible for having the actions required by this AD performed within the compliance times specified, unless the actions have already been done.

Requirements of AD 2001–09–13, Restated

Initial Inspections

(f) Prior to the accumulation of 8,000 total flight cycles, or within 90 days after May 24, 2001 (the effective date of AD 2001–09–13), whichever occurs later, perform detailed, surface high frequency eddy current (HFEC), and low frequency eddy current (LFEC) inspections, as applicable, for cracking of the forward and aft outer chord, aft mid chord, and upper and lower intercostals of the Station 1809.5 bulkhead. Do the inspections per Boeing Service Bulletin 767–53–0078, Revision 2, dated April 19, 2001; or Boeing Alert Service Bulletin 767–53–0078, Revision 3, dated November 15, 2001.

Note 1: For the purposes of this AD, a detailed inspection is: ''An intensive visual examination of a specific structural area, system, installation, or assembly to detect damage, failure, or irregularity. Available lighting is normally supplemented with a direct source of good lighting at intensity deemed appropriate by the inspector. Inspection aids such as mirror, magnifying lenses, *etc.*, may be used. Surface cleaning and elaborate access procedures may be required.''

Repetitive Inspections

(g) For areas where no cracking is found during the inspection per paragraph (f) of this AD: Repeat the inspections in paragraph (f) thereafter at the intervals specified in paragraphs (g)(1) and (g)(2) of this AD, per Boeing Service Bulletin 767–53–0078, Revision 2, dated April 19, 2001; or Boeing Alert Service Bulletin 767–53–0078, Revision 3, dated November 15, 2001; until paragraph (i), (l)(1), or (m) of this AD has been done.

(1) Repeat the detailed inspection every 3,000 flight cycles, or 18 months, whichever comes first.

(2) Repeat the surface HFEC and LFEC inspections every 6,000 flight cycles or 36 months, whichever comes first.

Repair and Follow-On Actions

(h) If any cracking is found during any inspection required by paragraph (f) or (g) of this AD, before further flight, repair per paragraph (h)(1) or (h)(2) of this AD, as applicable.

(1) For cracking of the aft outer chord, aft mid chord, or any intercostal: Repair per a method approved by the Manager, Seattle Aircraft Certification Office (ACO), FAA. For a repair method to be approved by the Manager, Seattle ACO, as required by this paragraph, the Manager's approval letter must specifically reference this AD.

(2) For cracking of the forward outer chord: Repair per Boeing Service Bulletin 767–53–0078, Revision 2, dated April 19, 2001; Revision 3, dated November 15, 2001; or Revision 4, dated September 26, 2002; except as provided by paragraph (j) of this AD. Procedures for repair include open-hole HFEC inspections for cracking of certain fastener holes of the chord and longeron fitting, detailed inspections for cracking of adjacent structure, and installation of new chords, splices, fairings, and brackets. If the time-limited repair is done per the service bulletin, do a detailed inspection of the repaired area within 1,500 flight cycles or 9 months after installation of the temporary repair, whichever comes first, and do paragraph (h)(2)(i) or (h)(2)(ii) of this AD, per the service bulletin. As of the effective date of this AD, inspect only in accordance with Boeing Alert Service Bulletin 767–53–0078, Revision 4, dated September 26, 2002.

(i) If no cracking is found during the inspection of the repaired area: Within 3,000 flight cycles or 18 months after installation of the time-limited repair, whichever comes first, do paragraph (i), ''Permanent Repair,'' of this AD.

(ii) If any cracking is found during the inspection of the repaired area: Before further flight, do paragraph (i), ''Permanent Repair,'' of this AD.

Permanent Repair

(i) Except as provided by paragraph (j) of this AD, installation of the permanent repair of the forward outer chord, including accomplishment of all actions specified in Part 4 of the Accomplishment Instructions of Boeing Service Bulletin 767–53–0078, Revision 2, dated April 19, 2001; Boeing Service Bulletin 767–53–0078, Revision 3, dated November 15, 2001; or Boeing Alert Service Bulletin 767–53–0078, Revision 4, dated September 26, 2002; terminates the repetitive inspections required by paragraph (g) of this AD. As of the effective date of this AD, install the permanent repair only in accordance with Boeing Alert Service Bulletin 767–53–0078, Revision 4, dated September 26, 2002.

Note 2: Installation of the permanent repair before the effective date of this AD in accordance with Boeing Service Bulletin 767–53–0078, dated October 15, 1998; Revision 1, dated September 9, 1999; is acceptable for compliance with paragraph (i) of this AD.

Exception to Repair Instructions

(j) For repairs of the forward outer chord: Where the service bulletin specifies to ask Boeing for repair data, repair per a method approved by the Manager, Seattle ACO, or per data meeting the type certification basis of the airplane approved by a Boeing Company Designated Engineering Representative who has been authorized by the Manager, Seattle ACO, to make such findings. For a repair method to be approved by the Manager, Seattle ACO, as required by this paragraph, the Manager's approval letter must specifically reference this AD.

New Requirements of This AD

Initial and Repetitive Inspections, and Torque Test for Airplanes Without the Permanent Repair

(k) For airplanes that have not had the permanent repair installed in accordance with paragraph (i) of this AD, at the later of the times in paragraphs (k)(1) and (k)(2) of this AD, do all the actions in paragraph (l) of this AD.

(1) Within 3,000 flight cycles or 18 months after the effective date of this AD, whichever occurs first.

(2) Prior to the accumulation of 8,000 total flight cycles.

(l) Do all the actions in paragraphs (l)(1) and (l)(2) of this AD in accordance with ''Part 1—Inspection'' of the Accomplishment Instructions of Boeing Alert Service Bulletin 767–53A0078, Revision 4, dated September 26, 2002.

(1) Do detailed, LFEC, and applicable HFEC inspections for cracking of the forward and aft outer chord, splice fitting, aft mid chord, aft intercostal, tension fitting, and fuselage skin, and repeat the applicable inspections at the applicable time in paragraph (l)(1)(i) and (l)(1)(ii) of this AD. This inspection terminates the repetitive inspections required by paragraphs (f) and (g) of this AD.

(i) Except as provided by paragraph (l)(1)(ii) of this AD: Repeat the inspections, at intervals not to exceed 3,000 flight cycles until the permanent repair in paragraph (m)(2) of this AD has been done.

(ii) For airplanes that meet the criteria in flag note 1 of Figure 1 of Boeing Alert Service Bulletin 767–53A0078, Revision 4, dated September 26, 2002 (close ream fasteners, external doubler, rub strip or wear plate installed): Repeat the open-hole HFEC inspections for cracking of the forward outer chord, splice fitting, tension fitting, and fuselage skin in Step 7, Figure 2 of the service bulletin at intervals not to exceed 9,000 flight cycles until the permanent repair in paragraph (m)(2) of this AD has been done.

(2) Do a one-time torque test and related investigative and corrective actions of the tension bolt at lower stringer 12A. If any corrosion or damage is found in the bolt hole, and the service bulletin specifies to contact Boeing for appropriate action: Before further flight, repair per a method approved by the Manager, Seattle Aircraft Certification Office (ACO), FAA; or per data meeting the type certification basis of the airplane approved by a Boeing Company Designated Engineering Representative who has been authorized by the Manager, Seattle ACO, to make such findings. For a repair method to be approved, the approval must specifically reference this AD.

Corrective Actions

(m) If any cracking is found during any inspection required by paragraph (l), (n) and (o) of this AD, before further flight, repair in accordance with paragraph (m)(1) or (m)(2) of this AD, as applicable.

(1) For cracks found during the inspection required by paragraph (n) or (o) of this AD, or for cracks found in the aft outer chord, tension fitting, splice fitting, aft mid chord, or any intercostal: Before further flight, repair per a method approved by the Manager, Seattle Aircraft Certification Office (ACO), FAA; or per data meeting the type certification basis of the airplane approved by a Boeing Company Designated Engineering Representative who has been authorized by the Manager, Seattle ACO, to make such findings. For a repair method to be approved, the approval must specifically reference this AD.

(2) For cracks in the forward outer chord: Prior to further flight, do the time limited repair in paragraph (h)(2) of this AD, or do the permanent repair in paragraph (i) of this AD. If the time limited repair is done, do the other applicable actions in paragraph (h)(2) of this AD at the times specified in that paragraph. As of the effective date of this AD, only repairs done per Boeing Alert Service Bulletin 767–53A0078, Revision 4, dated September 26, 2002, are acceptable for compliance with the requirements of this paragraph.

Repetitive Inspection of Repaired Area

(n) For any airplane on which the permanent repair in paragraph (i) or (m)(2) of this AD is installed, at the later of the times in paragraph (n)(1) and (n)(2) of this AD: Do detailed, LFEC, and applicable HFEC inspections of the forward and aft outer chords, tension fitting, splice fitting, and splice angle for cracks; and a detailed inspection of the aft mid chord and aft upper and lower intercostals for cracks. Do the inspections in accordance with ''Part 6—After Modification or After-Repair Inspection Program'' of the Accomplishment Instructions of Boeing Alert Service Bulletin 767–53A0078, Revision 4, dated September 26, 2002. Repeat each inspection, except as provided by paragraph (o) of this AD, thereafter at intervals not to exceed 6,000 flight cycles, or 36 months, whichever occurs first.

(1) Within 12,000 flight cycles or 72 months after the repair accomplished in accordance with paragraph (i) or (m)(2) of this AD.

(2) Prior to the accumulation of 25,000 total flight cycles.

(o) For any airplane on which the permanent repair in paragraph (i) or (m)(2) of this AD is installed, and that meets the criteria (close ream fasteners, external doubler, rub strip or wear plate installed) in flag note 1 of Figure 9 of Boeing Alert Service Bulletin 767–53A0078, Revision 4, dated September 26, 2002: After the initial inspection in paragraph (n) of this AD, repeat the open-hole HFEC inspection in Step 7 of Figure 10 of the service bulletin, at intervals not to exceed 12,000 flight cycles, or 72 months, whichever occurs first.

Alternative Methods of Compliance

(p)(1) In accordance with 14 CFR 39.19, the Manager, Seattle Aircraft Certification Office (ACO), FAA, is authorized to approve alternative methods of compliance (AMOCs) for the corresponding provisions of this AD.

(2) AMOCs, approved previously per AD 2001–09–13, amendment 39–12220, are approved as AMOCs with the corresponding provisions of this AD.

(3) An AMOC that provides an acceptable level of safety may be used for any repair required by this AD, if it is approved by a Boeing Company Designated Engineering Representative who has been authorized by the Manager, Seattle ACO, to make such findings.

Issued in Renton, Washington, on November 17, 2004.

Ali Bahrami,

Manager, Transport Airplane Directorate, Aircraft Certification Service.

[FR Doc. 04–26494 Filed 11–30–04; 8:45 am]

BILLING CODE 4910–13–P

DEPARTMENT OF TRANSPORTATION

Federal Aviation Administration

14 CFR Part 39

[Docket No. FAA–2004–19754; Directorate Identifier 2004–NM–181–AD]

RIN 2120–AA64

Airworthiness Directives; Bombardier Model CL–600–2C10 (Regional Jet Series 700 & 701) Series Airplanes, and Model CL–600–2D24 (Regional Jet Series 900) Series Airplanes

AGENCY: Federal Aviation Administration (FAA), DOT.

ACTION: Notice of proposed rulemaking (NPRM).

SUMMARY: The FAA proposes to adopt a new airworthiness directive (AD) for certain Bombardier Model CL–600–2C10 (Regional Jet Series 700 & 701) series airplanes, and Model CL–600–2D24 (Regional Jet Series 900) series airplanes. This proposed AD would require revising the Airworthiness Limitations section of the Instructions of Continued Airworthiness by incorporating new repetitive inspections and an optional terminating action for the repetitive inspections, and would require repairing any crack. This proposed AD is prompted by reports of hydraulic pressure loss in either the number 1 or number 2 hydraulic systems due to breakage or leakage of hydraulic lines in the aft equipment bay and reports of cracks on the aft pressure bulkhead web around these feed-through holes. We are proposing this AD to prevent loss of hydraulic pressure, which could result in reduced controllability of the airplane and to detect and correct cracks on the aft pressure bulkhead web, which could result in reduced structural integrity of the aft pressure bulkhead.

DATES: We must receive comments on this proposed AD by January 3, 2005.

ADDRESSES: Use one of the following addresses to submit comments on this proposed AD.

- DOT Docket Web site: Go to *http://dms.dot.gov* and follow the instructions for sending your comments electronically.
- Government-wide rulemaking Web site: Go to *http://www.regulations.gov* and follow the instructions for sending your comments electronically.
- Mail: Docket Management Facility, U.S. Department of Transportation, 400 Seventh Street, SW., Nassif Building, room PL–401, Washington, DC 20590.
- *By fax:* (202) 493–2251.
- Hand Delivery: Room PL–401 on the plaza level of the Nassif Building, 400 Seventh Street, SW., Washington, DC, between 9 a.m. and 5 p.m., Monday through Friday, except Federal holidays.

For service information identified in this proposed AD, contact Bombardier, Inc., Canadair, Aerospace Group, P.O. Box 6087, Station Centre-ville, Montreal, Quebec H3C 3G9, Canada.

You can examine the contents of this AD docket on the Internet at *http://dms.dot.gov*, or in person at the Docket Management Facility, U.S. Department of Transportation, 400 Seventh Street, SW., room PL–401, on the plaza level of the Nassif Building, Washington, DC. This docket number is FAA–2004–19754; the directorate identifier for this docket is 2004–NM–181–AD.

FOR FURTHER INFORMATION CONTACT:

Technical information: Serge Napoleon, Aerospace Engineer, Airframe and Propulsion Branch, ANE–171, FAA, New York Aircraft Certification Office, 1600 Stewart Avenue, suite 410, Westbury, New York 11590; telephone (516) 228–7312; fax (516) 794–5531.

Plain language information: Marcia Walters, *marcia.walters@faa.gov*.

SUPPLEMENTARY INFORMATION:

Docket Management System (DMS)

The FAA has implemented new procedures for maintaining AD dockets electronically. As of May 17, 2004, new AD actions are posted on DMS and assigned a docket number. We track each action and assign a corresponding directorate identifier. The DMS AD docket number is in the form ''Docket No. FAA–2004–99999.'' The Transport Airplane Directorate identifier is in the form ''Directorate Identifier 2004–NM–999–AD.'' Each DMS AD docket also lists the directorate identifier (''Old Docket Number'') as a cross-reference for searching purposes.

Comments Invited

We invite you to submit any relevant written data, views, or arguments regarding this proposed AD. Send your comments to an address listed under **ADDRESSES**. Include ''Docket No. FAA–2004–19754; Directorate Identifier 2004–NM–181–AD'' at the beginning of your comments. We specifically invite comments on the overall regulatory, economic, environmental, and energy aspects of the proposed AD. We will consider all comments submitted by the closing date and may amend the proposed AD in light of those comments.

We will post all comments we receive, without change, to *http://dms.dot.gov*, including any personal information you provide. We will also post a report summarizing each substantive verbal contact with FAA personnel concerning this proposed AD. Using the search function of our docket Web site, anyone can find and read the comments in any of our dockets, including the name of the individual who sent the comment (or signed the comment on behalf of an association, business, labor union, etc.). You can review the DOT's complete Privacy Act Statement in the **Federal Register** published on April 11, 2000 (65 FR 19477–78), or you can visit *http://dms.dot.gov*.

We are reviewing the writing style we currently use in regulatory documents. We are interested in your comments on whether the style of this document is clear, and your suggestions to improve the clarity of our communications that affect you. You can get more information about plain language at *http://www.faa.gov/language* and *http://www.plainlanguage.gov*.

Examining the Docket

You can examine the AD docket on the Internet at http://dms.dot.gov, or in person at the Docket Management Facility office between 9 a.m. and 5 p.m., Monday through Friday, except Federal holidays. The Docket Management Facility office (telephone (800) 647–5227) is located on the plaza level of the Nassif Building at the DOT street address stated in the **ADDRESSES** section. Comments will be available in the AD docket shortly after the DMS receives them.

Discussion

Transport Canada Civil Aviation (TCCA), which is the airworthiness authority for Canada, notified us that an unsafe condition may exist on certain Bombardier Model CL–600–2C10 (Regional Jet Series 700 & 701) series airplanes, and Model CL–600–2D24 (Regional Jet Series 900) series airplanes. TCCA advises that there have been a number of reported cases of

hydraulic pressure loss in either the number 1 or number 2 hydraulic systems due to breakage or leakage of hydraulic lines in the aft equipment bay. In some cases, hydraulic lines and connector jam nuts were found loose at the aft pressure bulkhead web. Loosening of the jam nuts also resulted in elongation of the affected feed-through holes on the aft pressure bulkhead web at fuselage station 1098.2, stringers 8 and 9, left- and right-hand sides. In addition, cracks were found on the aft pressure bulkhead web around these feed-through holes. Loss of hydraulic pressure, if not corrected, could result in reduced controllability of the airplane. Cracks on the aft pressure bulkhead web, if not detected and corrected, could result in reduced structural integrity of the aft pressure bulkhead.

Relevant Service Information

Bombardier has issued CRJ 700/900 Series Temporary Revision (TR) MRM2–129, dated June 1, 2004. The TR describes procedures for new repetitive inspections of the aft pressure bulkhead and pylon pressure pan in the vicinity of the hydraulic fittings, and the hydraulic tube adapters. The TR also describes an optional terminating action for the repetitive inspections. Accomplishing the actions specified in the service information is intended to adequately address the unsafe condition. TCCA mandated the service information and issued Canadian airworthiness directive CF–2004–14, dated July 20, 2004, to ensure the continued airworthiness of these airplanes in Canada.

FAA's Determination and Requirements of the Proposed AD

These airplane models are manufactured in Canada and are type certificated for operation in the United States under the provisions of § 21.29 of the Federal Aviation Regulations (14 CFR 21.29) and the applicable bilateral airworthiness agreement. Pursuant to this bilateral airworthiness agreement, TCCA has kept the FAA informed of the situation described above. We have examined TCCA's findings, evaluated all pertinent information, and determined that we need to issue an AD for products of this type design that are certificated for operation in the United States.

Therefore, we are proposing this AD, which would require revising the Airworthiness Limitations section of the Instructions of Continued Airworthiness by incorporating new repetitive inspections and an optional terminating action for the repetitive inspections, and would require repairing any crack.

Differences Between the Proposed AD and Canadian Airworthiness Directive

Canadian airworthiness directive CF–2004–14 specifies that you may contact the manufacturer for instructions on how to repair certain conditions, but this proposed AD would require you to repair those conditions using a method that we or TCAA (or its delegated agent) approve. In light of the type of repair that would be required to address the unsafe condition, and consistent with existing bilateral airworthiness agreements, we have determined that, for this proposed AD, a repair we or TCAA approve would be acceptable for compliance with this proposed AD.

Costs of Compliance

This proposed AD would affect about 116 airplanes of U.S. registry. The proposed actions would take about 1 work hour per airplane, at an average labor rate of $65 per work hour. Based on these figures, the estimated cost of the proposed AD for U.S. operators is $7,540, or $65 per airplane.

Regulatory Findings

We have determined that this proposed AD would not have federalism implications under Executive Order 13132. This proposed AD would not have a substantial direct effect on the States, on the relationship between the national Government and the States, or on the distribution of power and responsibilities among the various levels of government.

For the reasons discussed above, I certify that the proposed regulation:

1. Is not a ''significant regulatory action'' under Executive Order 12866;

2. Is not a ''significant rule'' under the DOT Regulatory Policies and Procedures (44 FR 11034, February 26, 1979); and

3. Will not have a significant economic impact, positive or negative, on a substantial number of small entities under the criteria of the Regulatory Flexibility Act.

We prepared a regulatory evaluation of the estimated costs to comply with this proposed AD. See the **ADDRESSES** section for a location to examine the regulatory evaluation.

List of Subjects in 14 CFR Part 39

Air transportation, Aircraft, Aviation safety, Safety.

The Proposed Amendment

Accordingly, under the authority delegated to me by the Administrator, the FAA proposes to amend 14 CFR part 39 as follows:

PART 39—AIRWORTHINESS DIRECTIVES

1. The authority citation for part 39 continues to read as follows:

Authority: 49 U.S.C. 106(g), 40113, 44701.

§ 39.13 [Amended]

2. The FAA amends § 39.13 by adding the following new airworthiness directive (AD):

Bombardier, Inc. (Formerly Canadair): Docket No. FAA–2004–19754; Directorate Identifier 2004–NM–181–AD.

Comments Due Date

(a) The Federal Aviation Administration must receive comments on this AD action by January 3, 2005.

Affected ADs

(b) None.

Applicability

(c) This AD applies to the airplanes listed in Table 1 of this AD, certificated in any category.

TABLE 1.—APPLICABILITY

Bombardier model	Serial Nos.
(1) CL–600–2C10 (Regional Jet Series 700 & 701) series airplanes.	10003 through 10999 inclusive.
(2) CL–600–2D24 (Regional Jet Series 900) series airplanes.	15001 through 15990 inclusive.

Unsafe Condition

(d) This AD was prompted by reports of hydraulic pressure loss in either the number 1 or number 2 hydraulic systems due to breakage or leakage of hydraulic lines in the aft equipment bay and reports of cracks on the aft pressure bulkhead web around these feed-through holes. We are issuing this AD to prevent loss of hydraulic pressure, which could result in reduced controllability of the airplane and to detect and correct cracks on the aft pressure bulkhead web, which could result in reduced structural integrity of the aft pressure bulkhead.

Compliance

(e) You are responsible for having the actions required by this AD performed within the compliance times specified, unless the actions have already been done.

Revision of Airworthiness Limitations Section

(f) Within 30 days after the effective date of this AD, revise the Airworthiness Limitations section of the Instructions of Continued Airworthiness by inserting a copy of the new repetitive inspections and an optional terminating action of Bombardier CRJ 700/900 Series Temporary Revision (TR) MRM2–129, dated June 1, 2004, into Section 1.4, Part 2 (Airworthiness Limitations), of Bombardier Regional Jet Model CL–600–2C10 and CL–600–2D24 Maintenance Requirements Manual, CSP B–053. Thereafter, except as provided in paragraph (h)(2) or (i) of this AD, no alternative

structural inspection intervals may be approved for this aft pressure bulkhead and pylon pressure pan in the vicinity of the hydraulic fittings and the hydraulic tube adapters.

(g) When the information in TR MRM2–129, dated June 1, 2004, is included in the general revisions of the Maintenance Requirement Manual, this TR may be removed.

Corrective Action

(h) If any crack is found during any inspection done in accordance with Bombardier CRJ 700/900 Series TR MRM2–129, dated June 1, 2004, or the same inspection specified in the general revisions of the Maintenance Requirement Manual, do the actions specified in paragraphs (h)(1) and (h)(2) of this AD.

(1) Before further flight, repair the crack in accordance with a method approved by either the Manager, New York Aircraft Certification Office (ACO), FAA; or Transport Canada Civil Aviation (TCCA) (or its delegated agent).

(2) Within 30 days after repairing any crack in accordance with paragraph (h)(1) of this AD, revise the Airworthiness Limitations section of the Instructions of Continued Airworthiness by inserting a copy of the inspection requirements for the repair required by paragraph (h)(1) of this AD into Section 1.4, Part 2 (Airworthiness Limitations) of Bombardier Regional Jet Model CL–600–2C10 and CL–600–2D24 Maintenance Requirements Manual, CSP B–053. Thereafter, except as provided in paragraph (i) of this AD, no alternative structural inspection intervals may be approved for this aft pressure bulkhead and pylon pressure pan in the vicinity of the hydraulic fittings, and the hydraulic tube adapters.

Alternative Methods of Compliance (AMOCs)

(i) The Manager, New York ACO, FAA, has the authority to approve AMOCs for this AD, if requested in accordance with the procedures found in 14 CFR 39.19.

Related Information

(j) Canadian airworthiness directive CF–2004–14, dated July 20, 2004, also addresses the subject of this AD.

Issued in Renton, Washington, on November 17, 2004.

Ali Bahrami,

Manager, Transport Airplane Directorate, Aircraft Certification Service.

[FR Doc. 04–26493 Filed 11–30–04; 8:45 am]

BILLING CODE 4910–13–P

DEPARTMENT OF TRANSPORTATION

Federal Aviation Administration

14 CFR Part 39

[Docket No. FAA–2004–19755; Directorate Identifier 2004–NM–23–AD]

RIN 2120–AA64

Airworthiness Directives; Boeing Model 747 Airplanes

AGENCY: Federal Aviation Administration (FAA), DOT.

ACTION: Notice of proposed rulemaking (NPRM).

SUMMARY: The FAA proposes to adopt a new airworthiness directive (AD) for certain Boeing Model 747 airplanes. This proposed AD would require repetitive tests to detect hot air leaking from the trim air diffuser ducts or sidewall riser duct assemblies (collectively referred to in this proposed AD as ''TADDs''), related investigative actions, and corrective actions if necessary. This proposed AD also would provide an optional terminating action for the repetitive tests. This proposed AD is prompted by reports of deteriorating sealants both inside and outside the center wing fuel tank due to heat damage from leaking TADDs. We are proposing this AD to prevent leakage of fuel or fuel vapors into areas where ignition sources may be present, which could result in a fire or explosion.

DATES: We must receive comments on this proposed AD by January 18, 2005.

ADDRESSES: Use one of the following addresses to submit comments on this proposed AD.

- DOT Docket Web site: Go to *http://dms.dot.gov* and follow the instructions for sending your comments electronically.
- Government-wide rulemaking Web site: Go to *http://www.regulations.gov* and follow the instructions for sending your comments electronically.
- Mail: Docket Management Facility, U.S. Department of Transportation, 400 Seventh Street, SW., Nassif Building, room PL–401, Washington, DC 20590.
- *By fax:* (202) 493–2251.
- Hand Delivery: Room PL–401 on the plaza level of the Nassif Building, 400 Seventh Street, SW., Washington, DC, between 9 a.m. and 5 p.m., Monday through Friday, except Federal holidays.

For service information identified in this proposed AD, contact Boeing Commercial Airplanes, P.O. Box 3707, Seattle, Washington 98124–2207.

You can examine the contents of this AD docket on the Internet at *http://dms.dot.gov*, or at the Docket Management Facility, U.S. Department of Transportation, 400 Seventh Street, SW., room PL–401, on the plaza level of the Nassif Building, Washington, DC.

FOR FURTHER INFORMATION CONTACT:

Technical information: Dan Kinney, Aerospace Engineer, Propulsion Branch, ANM–140S, FAA, Seattle Aircraft Certification Office, 1601 Lind Avenue, SW., Renton, Washington 98055–4056; telephone (425) 917–6499; fax (425) 917–6590.

Plain language information: Marcia Walters, *marcia.walters@faa.gov*.

SUPPLEMENTARY INFORMATION:

Docket Management System (DMS)

The FAA has implemented new procedures for maintaining AD dockets electronically. As of May 17, 2004, new AD actions are posted on DMS and assigned a docket number. We track each action and assign a corresponding directorate identifier. The DMS AD docket number is in the form ''Docket No. FAA–2004–99999.'' The Transport Airplane Directorate identifier is in the form ''Directorate Identifier 2004–NM–999–AD.'' Each DMS AD docket also lists the directorate identifier (''Old Docket Number'') as a cross-reference for searching purposes.

Comments Invited

We invite you to submit any relevant written data, views, or arguments regarding this proposed AD. Send your comments to an address listed under **ADDRESSES**. Include ''Docket No. FAA–2004–19755; Directorate Identifier 2004–NM–23–AD'' in the subject line of your comments. We specifically invite comments on the overall regulatory, economic, environmental, and energy aspects of the proposed AD. We will consider all comments submitted by the closing date and may amend the proposed AD in light of those comments.

We will post all comments we receive, without change, to *http://dms.dot.gov*, including any personal information you provide. We will also post a report summarizing each substantive verbal contact with FAA personnel concerning this proposed AD. Using the search function of that Web site, anyone can find and read the comments in any of our dockets, including the name of the individual who sent the comment (or signed the comment on behalf of an association, business, labor union, etc.). You can review DOT's complete Privacy Act Statement in the **Federal Register** published on April 11, 2000 (65 FR 19477–78), or you can visit *http://dms.dot.gov*.

We are reviewing the writing style we currently use in regulatory documents. We are interested in your comments on whether the style of this document is clear, and your suggestions to improve the clarity of our communications that affect you. You can get more information about plain language at *http://www.faa.gov/language* and *http://www.plainlanguage.gov*.

Examining the Docket

You can examine the AD docket on the Internet at *http://dms.dot.gov*, or in person at the Docket Management Facility office between 9 a.m. and 5 p.m., Monday through Friday, except Federal holidays. The Docket Management Facility office (telephone (800) 647–5227) is on the plaza level of the Nassif Building at the DOT street address stated in the **ADDRESSES** section. Comments will be available in the AD docket shortly after the DMS receives them.

Discussion

We have received a report indicating that inspections have revealed deteriorating sealants both inside and outside the center wing fuel tank on certain Boeing Model 747 airplanes. The deterioration is attributed to damage caused by hot air leaking from the trim air diffuser ducts or sidewall riser duct assemblies (collectively referred to in this proposed AD as ''TADDs''), which are part of the cabin air distribution system that is located between the top of the center wing fuel tank and the floor of the passenger cabin. These hot air leaks occur when the fiberglass diffuser ducts are damaged by the hot bleed air that they carry, leading the fiberglass diffuser ducts to leak or disconnect from the titanium trim air manifold. The release of hot air can damage the upper skin of the center wing section, the longitudinal floor beams, and the fuselage frame intercostals, as well as the sealants of the center wing fuel tank. Damage to the sealants inside or outside the center wing fuel tank could allow fuel or fuel vapors to leak into an area where ignition sources may be present. This condition, if not corrected, could result in a fire or explosion.

Relevant Service Information

We have reviewed Boeing Alert Service Bulletin 747–21A2418, Revision 2, dated March 4, 2004; including Information Notice (IN) 747–21A2418 IN 01, dated March 11, 2004. The service bulletin describes procedures for repetitive tests to detect hot air leaking from the TADDs, related investigative actions, and corrective actions if necessary. The related investigative actions are repetitive general visual inspections for discrepancies or damage of the TADDs; and, if necessary, for damage of adjacent structure, the primary and secondary fuel barriers of the center wing fuel tank, control cables, and cable pulleys, and for raised cable seals. The corrective actions, if any damage is found, consist of replacing any damaged TADD with a new TADD having the same part number, or a new, improved TADD that has a higher temperature tolerance; and repairing any damage to adjacent structure, the primary and secondary fuel barriers of the center wing fuel tank, control cables, cable pulleys, or raised cable seals. After a TADD is replaced with a new TADD having the same part number, there is no need to test or inspect the replaced TADD until 21,200 flight hours after the replacement. After a TADD is replaced with a new, improved TADD, the repetitive inspections are no longer needed for that TADD. Accomplishing the actions specified in the service information is intended to adequately address the unsafe condition.

IN 747–21A2418 IN 01 identifies some headings that were inadvertently omitted from the Accomplishment Instructions of Boeing Alert Service Bulletin 747–21A2418, Revision 2. These headings clarify what procedures apply to which airplane configuration.

The service bulletin refers to Chapter 21–61–20 of the 747 Airplane Maintenance Manual as an additional source for service information for the test and inspection of the TADDs. Chapter 21–61–20 contains, among other things, detailed procedures for the general visual inspection of the TADDs for damage or discrepancies, including detachment of the trim air duct from the diffuser duct, delamination, missing or softened surface material, or blackened material. For any discrepant TADD, Chapter 21–61–20 also describes procedures for a general visual inspection for damage of the primary and secondary fuel barriers of the center wing tank; structure adjacent to the discrepant TADD; and cables, cable pulleys, and raised cable seals in the over-wing area.

FAA's Determination and Requirements of the Proposed AD

We have evaluated all pertinent information and identified an unsafe condition that is likely to exist or develop on other airplanes of this same type design. Therefore, we are proposing this AD, which would require doing the actions specified in the service information described previously, except as discussed under ''Differences Between the Proposed AD and Service Information.''

This proposed AD also provides an optional terminating action for the repetitive inspections, which is replacing the existing TADDs with new, improved TADDs. We have determined that it is acceptable to allow you to continue doing repetitive tests and inspections in lieu of requiring that you do the terminating action. In making this determination, we considered that long-term continued operational safety in this case will be adequately ensured by repetitive inspections to detect hot air leaking from the TADDs or discrepancies of the TADDs before these conditions are a hazard to the airplane.

Clarification of Proposed Requirements

This proposed AD would require that any replacement TADD must be new. Used TADDs are not acceptable replacement parts. Because the material of the TADDs deteriorates at a known rate, an operator would have to know how many total flight hours had been accumulated on a serviceable TADD, and would have to test and inspect that TADD at appropriate intervals. We find that it is unlikely that operators will have all of the data that would be needed for a serviceable TADD to be an acceptable replacement. Therefore, this proposed AD would allow replacement only with new parts.

Differences Between the Proposed AD and Service Information

For the hot air leak test, the service bulletin provides a compliance time of the earlier of 180 days or 2,000 flight hours after the release date of Revision 2 of the service bulletin, once the airplane has accumulated 20,000 total flight hours. For this test, this proposed AD would require the initial test to be done prior to the accumulation of 21,200 flight hours, or within 1,200 flight hours after the effective date of this AD, whichever is later. This compliance time is the equivalent of the inspection threshold of 20,000 total flight hours, plus a grace period of 1,200 flight hours (which is equivalent to one repetitive interval, as specified in the service bulletin). In developing an appropriate compliance time for this AD, we considered the manufacturer's recommendation, and the degree of urgency associated with the subject unsafe condition. In light of these factors, we find that a 1,200-flight-hour grace period represents an appropriate interval of time for affected airplanes (with close to or more than 20,000 total flight hours as of the effective date of the AD) to continue to operate without compromising safety.

Costs of Compliance

This proposed AD would affect about 1,305 airplanes worldwide. The following table provides the estimated costs for U.S. operators to comply with this proposed AD.

ESTIMATED COSTS

Action	Work hours	Average labor rate per hour	Parts	Cost per airplane	Number of U.S.-registered airplanes	Fleet cost
Hot air leak test	3	$65	None	$195 per test cycle	246	$47,970 per test cycle.
General visual inspection	5	65	None	$325 per inspection cycle	246	$79,950 per inspection cycle.

Regulatory Findings

We have determined that this proposed AD would not have federalism implications under Executive Order 13132. This proposed AD would not have a substantial direct effect on the States, on the relationship between the national Government and the States, or on the distribution of power and responsibilities among the various levels of government.

For the reasons discussed above, I certify that the proposed regulation:

1. Is not a ''significant regulatory action'' under Executive Order 12866;

2. Is not a ''significant rule'' under the DOT Regulatory Policies and Procedures (44 FR 11034, February 26, 1979); and

3. Will not have a significant economic impact, positive or negative, on a substantial number of small entities under the criteria of the Regulatory Flexibility Act.

We prepared a regulatory evaluation of the estimated costs to comply with this proposed AD. See the **ADDRESSES** section for a location to examine the regulatory evaluation.

List of Subjects in 14 CFR Part 39

Air transportation, Aircraft, Aviation safety, Safety.

The Proposed Amendment

Accordingly, under the authority delegated to me by the Administrator, the FAA proposes to amend 14 CFR part 39 as follows:

PART 39—AIRWORTHINESS DIRECTIVES

1. The authority citation for part 39 continues to read as follows:

Authority: 49 U.S.C. 106(g), 40113, 44701.

§ 39.13 [Amended]

2. The FAA amends § 39.13 by adding the following new airworthiness directive (AD):

Boeing: Docket No. FAA–2004–19755; Directorate Identifier 2004–NM–23–AD.

Comments Due Date

(a) The Federal Aviation Administration (FAA) must receive comments on this AD action by January 18, 2005.

Affected ADs

(b) None.

Applicability

(c) This AD applies to Boeing Model 747–100, 747–100B, 747–100B SUD, 747–200B, 747–200C, 747–200F, 747–300, 747–400, 747–400D, 747–400F, 747SR, and 747SP series airplanes; certificated in any category; line numbers 1 through 1316 inclusive.

Unsafe Condition

(d) This AD was prompted by reports of deteriorating sealants both inside and outside the center wing fuel tank due to heat damage from leaking trim air diffuser ducts or sidewall riser duct assemblies (collectively referred to in this AD as ''TADDs''). We are issuing this AD to prevent leakage of fuel or fuel vapors into areas where ignition sources may be present, which could result in a fire or explosion.

Compliance

(e) You are responsible for having the actions required by this AD performed within the compliance times specified, unless the actions have already been done.

Repetitive Tests and Inspections

(f) Do the actions in Table 1 of this AD at the times specified in Table 1 of this AD, in accordance with the Accomplishment Instructions of Boeing Alert Service Bulletin 747–21A2418, Revision 2, dated March 4, 2004; including Information Notice 747–21A2418 IN 01, dated March 11, 2004.

TABLE 1.—COMPLIANCE TIMES

Do this action—	Initially at the later of—	Then repeat within this interval until paragraph (j) is done—
(1) Repetitive test to detect hot air leaking from TADDs.	Prior to the accumulation of 21,200 total flight hours, or within 1,200 flight hours after the effective date of this AD.	1,200 flight hours.
(2) General visual inspection for damage or discrepancies of the TADDs.	Prior to the accumulation of 27,000 total flight hours, or within 7,000 flight hours after the effective date of this AD, except as provided by paragraph (g) of this AD.	7,000 flight hours.

Note 1: For the purposes of this AD, a general visual inspection is: ''A visual examination of an interior or exterior area, installation, or assembly to detect obvious damage, failure, or irregularity. This level of inspection is made from within touching distance unless otherwise specified. A mirror may be necessary to ensure visual access to all surfaces in the inspection area. This level of inspection is made under normally available lighting conditions such as daylight, hangar lighting, flashlight, or droplight and may require removal or opening of access panels or doors. Stands, ladders, or platforms may be required to gain proximity to the area being checked.''

Note 2: Boeing Alert Service Bulletin 747–21A2418, Revision 2, refers to Chapter 21–61–20 of the 747 Airplane Maintenance Manual as an additional source for service information for the test and inspections of the TADDs.

(g) If any hot air leak is found during any test required by paragraph (f) of this AD: Before further flight, do the general visual inspection for damage or discrepancies of the TADDs, in accordance with the

Accomplishment Instructions of Boeing Alert Service Bulletin 747–21A2418, Revision 2, dated March 4, 2004; including Information Notice 747–21A2418 IN 01, dated March 11, 2004.

Corrective Actions

(h) If any damage or discrepancy is found during any general visual inspection for damage required by paragraph (f) or (g) of this AD: Before further flight, perform a general visual inspection for damage of the primary and secondary fuel barriers of the center wing tank; structure adjacent to the discrepant TADD; and cables, cable pulleys, and raised cable seals in the over-wing area; do applicable repairs; and replace the damaged TADD with a new TADD having the same part number or a new, improved TADD having a part number listed in the ''New TADD Part Number'' or ''New Sidewall Riser Duct Assy Part Number'' column, as applicable, of the tables in Section 2.C.2. of the service bulletin. Do all of these actions in accordance with the Accomplishment Instructions of Boeing Alert Service Bulletin 747–21A2418, Revision 2, dated March 4, 2004; including Information Notice 747–21A2418 IN 01, dated March 11, 2004. Then, repeat the test and inspection required by paragraph (f) of this AD at the times specified in Table 1 of this AD, except as provided by paragraphs (i) and (j) of this AD.

Note 3: Only new TADDs, not used ones, are acceptable as replacement parts, as specified in paragraph (h) of this AD.

(i) For any TADD, whether damaged or not, that is replaced with a new TADD having the same part number as the TADD being replaced: Within 21,200 flight hours after the TADD is replaced, do the test to detect hot air leaking from the replaced TADD, and within 27,000 flight hours after the TADD is replaced, do the general visual inspection for damage, as specified in paragraph (f) of this AD. Thereafter, repeat the test and inspection at the repetitive intervals specified in Table 1 of this AD.

Optional Terminating Action

(j) For any TADD that is replaced with a new, improved TADD having a part number listed in the ''New TADD Part Number'' or ''New Sidewall Riser Duct Assy Part Number'' column, as applicable, of the tables in Section 2.C.2. of Boeing Alert Service Bulletin 747–21A2418, Revision 2, dated March 4, 2004; including Information Notice 747–21A2418 IN 01, dated March 11, 2004: The repetitive tests and inspections required by this AD are terminated for the TADD that is replaced with a new, improved TADD.

Previously Accomplished Actions

(k) Actions accomplished before the effective date of this AD in accordance with Boeing Alert Service Bulletin 747–21A2418, dated November 14, 2002; or Revision 1, dated October 16, 2003; are acceptable for compliance with the corresponding actions required by this AD.

Alternative Methods of Compliance (AMOCs)

(l) The Manager, Seattle Aircraft Certification Office (ACO), FAA, has the authority to approve AMOCs for this AD, if requested in accordance with the procedures found in 14 CFR 39.19.

Issued in Renton, Washington, on November 17, 2004.

Ali Bahrami,

Manager, Transport Airplane Directorate, Aircraft Certification Service.

[FR Doc. 04–26492 Filed 11–30–04; 8:45 am]

BILLING CODE 4910–13–P

NATIONAL INDIAN GAMING COMMISSION

25 CFR Part 542

RIN 3141–AA27

Minimum Internal Control Standards

AGENCY: National Indian Gaming Commission.

ACTION: Proposed rule revisions.

SUMMARY: In response to the inherent risks of gaming enterprises and the resulting need for effective internal controls in Tribal gaming operations, the National Indian Gaming Commission (Commission or NIGC) first developed Minimum Internal Control Standards (MICS) for Indian gaming in 1999, and then later revised them in 2002. The Commission recognized from the outset that periodic technical adjustments and revisions would be necessary in order to keep the MICS effective in protecting Tribal gaming assets and the interests of Tribal stakeholders and the gaming public. To that end, the following proposed rule revisions contain certain proposed corrections and revisions to the Commission's existing MICS, which are necessary to correct erroneous citations or references in the MICS and to clarify, improve, and update other existing MICS provisions. The purpose of these proposed MICS revisions is to address apparent shortcomings in the MICS and various changes in Tribal gaming technology and methods. Public comment to these proposed MICS revisions will be received by the Commission for a period of forty-five (45) days after the date of their publication in the **Federal Register**. After consideration of all received comments, the Commission will make whatever changes to the proposed revisions that it deems appropriate and then promulgate and publish the final revisions to the Commission's MICS Rule, 25 CFR part 542.

DATES: Submit comments on or before January 18, 2005.

ADDRESSES: Mail comments to ''Comments to First Proposed MICS Rule Revisions, National Indian Gaming Commission, 1441 L Street, NW., Washington, DC 20005, Attn: Vice-Chairman Nelson Westrin.'' Comments may be transmitted by facsimile to Vice-Chairman Westrin at (202) 632–0045, but the original also must be submitted to the above address.

FOR FURTHER INFORMATION CONTACT: Vice-Chairman Nelson Westrin, (202) 632–7003 (not a toll-free number).

SUPPLEMENTARY INFORMATION:

Background

On January 5, 1999, the Commission first published its Minimum Internal Control Standards (MICS) as a Final Rule. As gaming Tribes and the Commission gained practical experience applying the MICS, it became apparent that some of the standards required clarification or modification to operate as the Commission had intended and to accommodate changes and advances that had occurred over the years in Tribal gaming technology and methods. Consequently, the Commission, working with an Advisory Committee composed of Commission and Tribal representatives, published the new final revised MICS rule on June 27, 2002.

As the result of the practical experience of the Commission and Tribes working with the newly revised MICS, it has once again become apparent that additional corrections, clarifications, and modifications are needed to ensure that the MICS continue to operate as the Commission intended. To identify which of the current MICS need correction, clarification or modification, the Commission initially solicited input and guidance from NIGC employees, who have extensive gaming regulatory expertise and experience and work closely with Tribal gaming regulators in monitoring the implementation, operation, and effect of the MICS in Tribal gaming operations. The resulting input from NIGC staff convinced the Commission that the MICS require continuing review and prompt revision on an ongoing basis to keep them effective and up-to-date. To address this need, the Commission decided to establish a Standing MICS Advisory Committee to assist it in both identifying and developing necessary MICS revisions and revisions on an ongoing basis.

In recognition of its government-to-government relationship with Tribes and related commitment to meaningful Tribal consultation, the Commission requested gaming Tribes, in January 2004, for nominations of Tribal representatives to serve on its Standing

MICS Advisory Committee. From the twenty-seven (27) Tribal nominations that it received, the Commission selected nine (9) Tribal representatives in March 2004 to serve on the Committee. The Commission's Tribal Committee member selections were based on several factors, including the regulatory experience and background of the individuals nominated, the size(s) of their affiliated Tribal gaming operation(s), the types of games played at their affiliated Tribal gaming operation(s), and the areas of the country in which their affiliated Tribal gaming operation(s) are located. The selection process was very difficult, because numerous highly qualified Tribal representatives were nominated to serve on this important Committee. As expected, the benefit of including Tribal representatives on the Committee, who work daily with the MICS, has proved to be invaluable.

Tribal representatives selected to serve on the Commission's Standing MICS Advisory Committee are: Tracy Burris, Gaming Commissioner, Chickasaw Nation Gaming Commission, Chickasaw Nation of Okalahoma; Jack Crawford, Chairman, Umatilla Gaming Commission, Confederated Tribes of the Umatilla Indian Reservation; Patrick Darden, Executive Director, Chitimacha Gaming Commission, Chitimacha Indian Tribe of Louisiana; Mark N. Fox, Compliance Director, Four Bears Casino, Three Affiliated Tribes of the Fort Berthold Reservation; Sherrilyn Kie, Senior Internal Auditor, Pueblo of Laguna Gaming Authority, Pueblo of Laguna; Patrick Lambert, Executive Director, Eastern Band of Cherokee Gaming Commission, Eastern Band of Cherokee Indians; John Meskill, Director, Mohegan Tribal Gaming Commission, Mohegan Indian Tribe; Jerome Schultze, Executive Director, Morongo Gaming Agency, Morongo Band of Mission Indians; and Lorna Skenandore, Assistant Gaming Manager, Support Services, Oneida Bingo and Casino, formerly Gaming Compliance Manager, Oneida Gaming Commission, Oneida Tribe of Indians of Wisconsin. The Advisory Committee also includes the following Commission representatives: Philip N. Hogen, Chairman; Nelson Westrin, Vice-Chairman; Cloyce V. Choney, Associate Commissioner; Joe H. Smith, Acting Director of Audits; Ken Billingsley, Region III Director; Nicole Peveler, Field Auditor; Ron Ray, Field Investigator; and Sandra Ashton, Staff Attorney, Office of General Counsel.

In the past, the MICS were comprehensively revised on a large wholesale basis. Such large-scale revisions proved to be difficult for Tribes to implement in a timely manner and unnecessarily disruptive to Tribal gaming operations. The purpose of the Commission's Standing Committee is to conduct a continuing review of the operation and effectiveness of the existing MICS, in order to promptly identify and develop needed revisions of the MICS, on a manageable incremental basis, as they become necessary to revise and keep the MICS practical and effective. By making more manageable incremental changes to the MICS on an ongoing basis, the Commission hopes to be more prompt in developing needed revisions, while, at the same time, avoiding larger-scale MICS revisions which take longer to implement and can be unnecessarily disruptive to Tribal gaming operations. In accordance with this approach, the Commission has developed the following proposed MICS rule revisions, with the assistance of its Standing MICS Advisory Committee. In doing so, the Commission is carrying out its statutory mandate under the Indian Gaming Regulatory Act, 25 U.S.C. 2706(b)(10), to promulgate necessary and appropriate regulations to implement the provisions of the Act. In particular, the following proposed MICS rule revisions are intended to address Congress' purpose and concern stated in Section 2702(2) of the Act, that the Act ''provide a statutory basis for the regulation of gaming by an Indian tribe adequate to shield it from organized crime and other corrupting influences, to ensure the Indian tribe is the primary beneficiary of the gaming operation, and to ensure the gaming is conducted fairly and honestly by both the operator and the players.''

The Commission, with the Committee's assistance, identified three specific objectives for the following proposed MICS rule revisions: (1) To ensure that the MICS are reasonably comparable to the internal control standards of established gaming jurisdictions; (2) to ensure that the interests of the Tribal stakeholders are adequately safeguarded; and (3) to ensure that the interests of the gaming public are adequately protected.

The Advisory Committee initially met on April 8, 2004, and then again on October 21, 2004, to discuss the revisions set forth in the following proposed MICS rule revisions. The input received from the Committee Members has been invaluable to the Commission in its development of the following proposed MICS rule revisions. In accordance with the Commission's established Government-to-Government Tribal Consultation Policy, the Commission provided a preliminary working draft of all of the proposed MICS rule revisions contained herein to gaming Tribes on June 22, 2004, for a thirty (30)-day informal review and comment period, before formulation of this proposed rule. In response to its requests for comments, the Commission received approximately fifty (50) comments from Commission and Tribal Advisory Committee members, individual Tribes, and other interested parties regarding the proposed revisions. A summary of these comments is presented below in the discussion of each proposed revision to which they relate.

General Comments to Proposed MICS Revisions

For reasons stated above in this preamble, the National Indian Gaming Commission proposes to revise the following specific sections of its MICS rule, 25 CFR part 542. The following discussion includes the Commission's responses to general comments concerning the MICS and is followed by a discussion regarding each of the specifically proposed revisions, along with previously submitted informal comments to the proposed revisions and the Commission's responses to those comments. As noted above, prior commenters include Commission and Tribal Advisory Committee members, gaming Tribes, and others.

Comments Questioning NIGC Authority To Promulgate MICS for Class III Gaming

Many of the previous informal comments to the preliminary working draft of the proposed MICS revisions pertained to the Commission's authority to promulgate rules governing the conduct of Class III gaming. Positions were expressed asserting that Congress intended the NIGC's Class III gaming regulatory authority to be limited exclusively to the approval of tribal gaming ordinances and management contracts. Similar comments were received concerning the first proposed MICS back in 1999. The Commission, at that time, determined in its publication of the original MICS in 1999 that it possessed the statutory authority to promulgate Class III MICS. As stated in the preamble to those MICS: ''The Commission believes that it does have the authority to promulgate this final rule. * * * [T]he Commission's promulgation of MICS is consistent with its responsibilities as the Federal regulator of Indian gaming.'' 64 FR 509 (Jan. 5, 1999). The current Commission reaffirms that determination. The Indian Gaming Regulatory Act, which established the regulatory structure for

all classes of Indian gaming, expressly provides that the Commission ''shall promulgate such regulations as it deems appropriate to implement the provisions of (the Act)''. 25 U.S.C. 2707(b)(10). Pursuant to this clearly stated statutory duty and authority under the Act, the Commission has determined that MICS are necessary and appropriate to implement and enforce the regulatory provisions of the Act governing the conduct of both Class II and Class III gaming and accomplish the purposes of the Act.

The Commission believes that the importance of internal control systems in the casino operating environment cannot be overemphasized. While this is true of any industry, it is particularly true and relevant to the revenue generation processes of a gaming enterprise, which, because of the physical and technical aspects of the games and their operation and the randomness of game outcomes, makes exacting internal controls mandatory. The internal control systems are the primary management procedures used to protect the operational integrity of gambling games, account for and protect gaming assets and revenues, and assure the reliability of the financial statements for Class II and III gaming operations. Consequently, internal control systems are a vitally important part of properly regulated gaming. Internal control systems govern the gaming enterprise's governing board, management, and other personnel who are responsible for providing reasonable assurance regarding the achievement of the enterprise's objectives, which typically include operational integrity, effectiveness and efficiency, reliable financial statement reporting, and compliance with applicable laws and regulations.

The Commission believes that strict regulations, such as the MICS, are not only appropriate but necessary for it to fulfill its responsibilities under the IGRA to establish necessary baseline, or *minimum*, Federal standards for all Tribal gaming operations on Indian lands. 25 U.S.C. 2702(3). Although the Commission recognizes that many Tribes had sophisticated internal control standards in place prior to the Commission's original promulgation of its MICS, the Commission also continues to strongly believe that promulgation and revision of these standards is necessary and appropriate to effectively implement the provisions of the Indian Gaming Regulatory Act and, therefore, within the Commission's clearly expressed statutory power and duty under Section 2706(b)(10) of the Act.

Comments Recommending Voluntary Tribal Compliance With MICS

Comments were also received suggesting that the NIGC should re-issue the MICS as a bulletin or guideline for Tribes to use voluntarily, at their discretion, in developing and implementing their own Tribal gaming ordinances and internal control standards.

The Commission disagrees. The MICS are common in established gaming jurisdictions and, to be effective in establishing a minimum baseline for the internal operating procedures of Tribal gaming enterprises, the rule must be concise, explicit, and uniform for all Tribal gaming operations to which they apply. Furthermore, to nurture and promote public confidence in the integrity and regulation of Indian gaming and ensure its adequate regulation to protect Tribal gaming assets and the interests of Tribal stakeholders and the public, the Commission's MICS regulations must be reasonably uniform in their implementation and application and regularly monitored and enforced by Tribal regulators and the NIGC to ensure Tribal compliance.

Proposed New or Revised Definitions in Section 542.2 of the MICS

The Commission proposes to add or revise definitions of the following four terms in section 542.2. A discussion of each proposed new or revised definition follows in alphabetical order. The text of the proposed new or revised definition is set forth following the conclusion of this preamble in which of all of the proposed revisions to the Commission's MICS rule, 25 CFR part 542, are discussed.

''Drop Period''

This is a new definition. Several Tribal and Commission Committee members recommended that a definition of the term ''drop period'' be added to the current existing MICS definitions. In conjunction with other proposed revisions to the MICS which include this term, the NIGC has determined that to ensure that such revisions are clear and unambiguous, insertion of the definition of the term ''drop period'' into the MICS Definitions section 542.2 is worthwhile. This definition was included in the preliminary working draft sent to Tribes for informal review and comment prior to formulation of the proposed new definition, and no comments were received objecting to the definition.

''Gaming Machine''

The Commission proposes to revise the existing MICS definition of this term to more accurately define the scope of the referenced term, as it is used in the MICS. Commission and Committee members recommended that the existing definition for ''gaming machine'' be revised to cover central server based linked gaming machines or player stations that are being increasingly utilized in Indian gaming. Comments were subsequently received supporting the proposed revision to the gaming machine definition, which was set forth in the preliminary working draft sent to the Committee and Tribes prior to formulation of the proposed revised definition. Comments were also received suggesting that the definition should differentiate Class II and Class III gaming machines. Comments were also received suggesting that instead of attempting to list all the various cash equivalents a machine might accept, it would be better simply to refer to the items as cash, coin or cash equivalents.

The Commission disagrees with the comment that the definition should attempt to narrow or define the applicability of the definition based on game classification. The definition is intended to be broadly applied to all gaming machines that are not otherwise separately defined in the MICS, such as an electronic bingo machine.

The Commission agrees with the suggestion that the term ''cash equivalents'' should be used in the definition. We believe the term is more representative of the various items that could be wagered, in addition to cash and coin. The following proposed revised definition of ''gaming machine'' has been modified accordingly to reflect this recommendation.

''Promotional Progressive Pots and/or Pools''

The Commission proposes to revise the existing MICS definition of this term to more accurately define the applicability of the referenced term. Committee members recommended that the definition of ''promotional progressive pots and/or pools'' be revised to also apply to poker games. The proposed revision was included in the preliminary working draft sent to the Committee and Tribes for informal review and comment before the following proposed revised definition was formulated. Comments were subsequently received supporting the proposed revision since most progressive promotional pots are utilized in poker games. One commenter contended that the proposed revision to

the progressive promotional pots and/or pools definition would create a conflict with the definition of secondary jackpots. The Commission will further consider this comment and examine how the two referenced terms are used in the MICS. If necessary, we may consider in the future whether there is any contradiction between the two terms that requires modification of the definition of secondary jackpots.

''Series Number''

This is a new definition. The referenced term is used in the current MICS but is not defined. Since it has been the frequent subject of inquiry regarding its meaning, the NIGC has determined that a definition of the term is warranted. Comments to the preliminary working draft were received from Committee members and Tribes uniformly supporting the addition of this proposed new definition to section 542.2 of the MICS:

Proposed Correction of Referencing and Citation Errors in Sections 542.7, 542.8, 542.12, and 542.13 of the MICS

The Commission identified and proposes to correct several referencing and citation errors in the current MICS. The sections where corrective revisions are proposed include the following: §§ 542.7(g)(1)(i), 542.8(h)(1)(i), 542.12(i)(4), 542.12(k)(1)(v), 542.12(k)(1)(ix), 542.12(k)(1)(xvii), and 542.13(l)(4).

Each of the referencing and citation corrections proposed above was set forth in the preliminary working draft provided to the Committee and Tribes for informal review and comment before this proposed rule was formulated. No comments were received objecting to the proposed corrections.

Proposed Revisions to Section 542.13(h) Standards for Evaluating Theoretical and Actual Hold Percentages

It is common practice in the gaming industry that gaming machine manufacturers provide gaming operators with a Pay Analysis Report (PAR) or PAR sheet for each gaming machine that they supply to the operator. The PAR sheet provides information regarding certain design specifications for the gaming machine, including the statistical theoretical percentage(s) that the gaming machine is designed to win or hold for the operator (house), based on an adequate level of wagering activity after payment of game winnings to players. A theoretical hold worksheet also accompanies the PAR sheet and provides additional theoretical hold information for the gaming machine, frequently including probability calculations of the machine's theoretical hold percentages for different specified levels of coin-in wagering activity. The converse to a gaming machine's theoretical hold percentage is its theoretical payback percentage, which is the percentage of total money wagered that the machine is designed to pay back to players as game winnings based on adequate levels of wagering activity. A gaming machine's theoretical payback percentage can be calculated by deducting its specified theoretical hold percentage(s) from one.

Periodic statistical tracking of actual gaming machine performance, by comparing each machine's actual hold and payback percentages in relation to its theoretical hold and/or payback percentages, has become a necessary standard of management practice to ensure the integrity of gaming machine operations and safeguard related machine revenues and assets. To effectively monitor gaming machine operations for performance irregularities, whether due to machine defect, malfunction, embezzlement, cheating, or other improper tampering, gaming operators are required to periodically prepare a gaming machine analysis report that compares each machine's actual hold percentages to its specified theoretical hold percentage(s), based on the levels of coin-in wagering activity for each reporting period. Any material deviations between the actual and theoretical hold percentages must be thoroughly investigated by gaming machine department management and other management personnel independent of the gaming operation's gaming machine department. The ultimate objective of the gaming machine analysis report and investigative process is to ensure that any material uncharacteristic deviation between actual and theoretical hold is not due to machine defect, malfunction, embezzlement, cheating, or other improper tampering; but instead, a reasonably expected mathematical deviation based on the randomness of the machine's game outcome selection mechanism and the number of game plays and outcomes analyzed.

The standards set forth in section 542.13(h) of the MICS are intended to provide a minimum benchmark for effective use of gaming machine performance analysis by Tribal gaming enterprises to safeguard the integrity of their gaming machine operations and related Tribal gaming assets. In establishing these standards, the Commission strives to keep them as practical and effective as possible for the diverse nature and scale of the Tribal gaming machine operations to which they apply. For that reason, the Commission proposes several revisions to section 542.13(h).

Proposed Deletion of Subsection 542.13(h)(2)

The Commission's proposed deletion of subsection 542.13(h)(2) will eliminate the current requirement that Tribal operators utilize a weighted average calculation to adjust and determine the appropriate theoretical hold percentages for periodic analysis of complex gaming machines (excluding multi-game multi-denominational gaming machines), which have manufacturer's PAR or theoretical hold worksheets that specify multiple theoretical hold or payback percentages, with or without a spread of more than 4% between their minimum and maximum specified theoretical hold/payback percentages.

Although the manufacturer's PAR sheets and theoretical hold worksheets for most gaming machines specify a single theoretical hold percentage, which can be reliably used for analysis of the machine's actual performance, there are other more complex gaming machines (excluding multi-gaming and multi-denominational gaming machines) that have multiple specified theoretical hold percentages. Identifying the most reliable theoretical hold percentage to use for analysis of the performance of these more complex gaming machines can be very difficult and challenging, because the most appropriate theoretical hold percentage is so dependent upon the different amounts of permitted coin-in betting wagers (*e.g.* 1-coin, 2-coin, 3-coin, *etc.*) that players may actually decide to make during a given reporting period. The weighted average calculation, which is currently required by subsection 542.13(h)(2), essentially weighs the different permitted player wagering decisions, by multiplying the total amount wagered for each permitted coin-in wager amount times the specified theoretical hold percentage for that wager. Then the sum of the individual theoretical hold results for each permitted coin-in wager amount is divided by the total amount of coin-ins, to give a weighted average theoretical hold percentage for use in analyzing that gaming machine's overall performance during the reporting period.

Based on past MICS compliance audits and consultation with other gaming jurisdictions, the Commission has determined that the currently required weighted average calculation does not necessarily produce the most reliable adjusted theoretical hold percentage for analyzing the

performance of complex gaming machines (other than multi-gaming and multi-denominational gaming machines) which have multiple specified theoretical hold percentages. Practical experience also demonstrates that this is also true regardless of whether the spread between the minimum and maximum specified theoretical hold percentages for such complex gaming machines exceeds 4%. Accordingly, the Commission proposes to delete subsection 542.13(h)(2) in its entirety.

In particular, the Commission has determined that, excluding multi-game and multi-denominational gaming machines, complex gaming machines with multiple specified theoretical hold percentages possess certain characteristics that generally result in most bettors making the maximum allowed coin-in wager. Typically, the pay tables for such machines provide for a disproportionately larger payout for maximum coin-in wagers. This naturally causes most players to bet the maximum allowable number of coins-in. Consequently, the weighted average calculation generally produces an adjusted theoretical hold percentage that is not significantly different than simply selecting the machine's most conservative or smallest specified theoretical hold percentage. Therefore, it is proposed that the required weighted average calculations in subsection 542.13(h)(2) for complex gaming machines, other than multi-game and multi-denomination gaming machines, be deleted regardless of the spread between the machines' minimum and maximum specified multiple theoretical hold percentages. Although no longer required, circumstances may still dictate use of the weighted average calculation for such gaming machines, instead of simply selecting the most conservative or smallest specified theoretical hold percentage for the machine. In those circumstances, it will remain the responsibility of Tribal gaming management, subject to Tribal Gaming Regulatory Authority (TGRA) oversight, to utilize appropriate weighted average calculations to determine the proper adjusted theoretical hold percentages for accurate and reliable analysis of gaming machine performance.

Proposed Revisions Renumbering Subsection 542.13(h)(4) as New Subsection 542.13(h)(2); Extending the Weighted Average Calculation Requirement to Both Multi-Game and Multi-Denomination Gaming Machines; and Deleting the 4% Theoretical Payback Spread Standard

The Commission also proposes to revise subsection 542.13(h)(4) by renumbering it as the new subsection 542.13(h)(2); extending the required use of weighted average calculations to determine the adjusted theoretical hold percentage for both multi-game and multi-denominational gaming machines; and deleting the 4% or greater spread criteria regarding the minimum and maximum specified theoretical payback percentage for such machines. While concluding that weighted average calculations need not be required for determining the most appropriate adjusted theoretical hold percentage for other complex gaming machines with multiple specified theoretical hold percentages, the Commission has determined that such calculations are essential for reliable analysis of the performance of multi-game and multi-denominational gaming machines, regardless of whether the spread between their minimum and maximum specified theoretical hold percentages is more or less than 4%. Therefore, the Commission proposes to add multi-denominational gaming machines to the weighted average calculation requirement in current subsection 542.13(h)(4), and also to delete the current requirement that the spread between the minimum and maximum specified multiple theoretical hold percentages must exceed 4% before any weighted average calculations are required to determine the appropriate adjusted theoretical hold percentage for either multi-game or multi-denominational gaming machines. In contrast to other complex gaming machines with multiple specified theoretical hold percentages, multi-game and multi-denominational gaming machines do not possess common characteristics that result in reasonably predictable player decisions regarding the individual programmed games of the multi-game gaming machine they elect to play or the amount or denomination of their wager. Instead player wagering decisions can vary widely and player game/denomination selections are also highly unpredictable and often subject to the effects of intervening management decisions, such as the activation/cancellation of game options, device location, gaming floor mix, and paytable alternatives. Thus, to effectively identify a reliable adjusted theoretical hold percentage for analysis of multi-game and multi-denominational gaming machine performance requires a weighted average calculation of player coins-in-wagering for each wager/game/denomination paytable player option. Furthermore, it is the Commission's considered judgment that such calculations are required and necessary regardless of whether the spread between the minimum and maximum specified multiple theoretical hold percentage for the multi-game and/or multi-denominational gaming machine exceeds 4%.

Proposed Revisions Renumbering Subsection 542.13(h)(19) as New Subsection 542.13(h)(18) and Replacing the Six Month Play Threshold With a Threshold of at Least 100,000 Wagering Transactions for Required Investigation of Large Variances Between Actual and Theoretical Hold

Based on past experience and interaction with Tribal gaming regulatory authorities, the Commission has determined that the current six (6) months play threshold in subsection 542.13(h)(19) for determining when a gaming machine is required to be included in the gaming machine analysis report is not practical or appropriate. Consequently, to more accurately define when the comparison and investigation of large variances between actual and theoretical hold is required, the Commission proposes to revise subsection 542.13(h)(19) by renumbering it as subsection 542.13(h)(18) and replacing the six (6) months play threshold with a play threshold of at least 100,000 wagering transactions.

Proposed Revisions to Subsection 542.13(m)(6) and (7) Accounting/Audit Standards for Gaming Machines

In recognition of the varying processes that exist in the gaming industry relative to the time period between currency drops for gaming machines, the Commission has determined that the current standard in subsection 542.13(m)(6) requiring weekly comparison of the bill-in meter readings to the total bill acceptor drop is impractical and too inflexible. Accordingly, the Commission proposes to delete the currently required weekly comparison and replace it within an every ''drop period'' requirement. The term ''drop period'' is proposed to be defined in section 542.2 as the period of time between sequential drops.

Furthermore, in consideration of the above proposed revision, the Commission also proposes to revise

subsection 542.13(m)(7) by deleting the current $200.00 threshold for required follow-up investigation of an unresolved variance between actual currency drop and bill-in meter reading and replacing it with a threshold amount that is ''both more than $25.00 and at least 3 percent (3%) of the actual currency drop.''

Comments Regarding Proposed Deletion of 4% Theoretical Payback Spread Standard and Elimination of the Weighted Average Calculation Requirements for Complex Gaming Machines, (Excluding Multi-Game or Multi-Denominational Gaming Machines), With Multiple Theoretical Hold Percentages

Comments were received supporting the deletion of both standards, indicating that the process will potentially become simpler. Comment was received supporting the deletion of the standards and the willingness of the Commission to accept alternative methods of identifying the appropriate theoretical payback/hold percentage for the machines in question, which will often involve simply selecting the most conservative theoretical hold percentage within the range of acceptable parameters established by the game manufacturer. Such a procedure is founded upon the premise that patrons will generally opt for max coin bet. Comment was received objecting to the proposed striking of the weighted average calculation for complex gaming machines with a spread between theoretical payback percentages greater than 4%. It was noted that on-line computerized accounting systems for gaming machines capture the required data and facilitate the identification of an optimal theoretical payback/hold percentage for game analysis. Consequently, the commenter contended there is no compelling need to strike the standard. Comment was received questioning whether the standard requires the data to be collected by hard meter or whether soft meters are acceptable.

The Commission concurs with the commenter that the selection of the most conservative hold percentage will generally produce a benchmark for analysis of complex gaming machines, other than multi-game and multi-denominational machines, that will enable the gaming machine analysis report to be accurate and effective. However, should such a procedure not be reflective of the method of play of the gaming operation's patrons, the weighted average calculation would become the desired alternative. By striking the standard, the Commission is deferring to the Tribal Gaming Regulatory Authority (TGRA) to ensure Tribal gaming management employs procedures appropriate to identify reliable theoretical payback/hold percentages for analyzing the performance of their complex gaming devices with multiple specified theoretical hold percentages (excluding multi-gaming and multi-denominational gaming machines). The Commission acknowledges that industry standard gaming machines and current technology on-line accounting systems greatly aid the process of collecting data. However, such on-line systems are not at this time required by the MICS for all gaming machines. Therefore, we do not agree that the striking of the standard lacks compelling justification.

The Commission refers the commenter to the MICS definitions regarding the question of whether hard or soft meters may be used to collect necessary game data and determine reliable theoretical payback/hold percentages for game performance analysis. In accordance with section 542.2, the term ''meter'' is defined as either hard or soft. Consequently, to satisfy the standard, either method of collection is permissible.

Comments Regarding Proposed Extension of Weighted Average Theoretical Hold Calculation and Other Multi-Game Gaming Machine Analysis Requirements to Multi-Denominational Machines

Comments were received acknowledging the need to extend the scope of the standard to include multi-denominational machines in addition to multi-game devices. Comment was received supporting the striking of the 4% theoretical payback percentage spread criteria with regards to multi-game and multi-denomination machines. The devices in question generally represent only a small portion of the typical gaming floor. Comment was received suggesting that, instead of quarterly meter reads, the meters could be read annually. Comment was also received questioning the need to make annual adjustments to the theoretical hold percentage for multi-game and multi-denomination devices, since the recalculation of the theoretical hold percentage results in only a nominal change. In addition, comment was also received regarding the task of calculating theoretical payback and hold percentages for multi-game machines that are also multi-denomination. The commenter questioned whether the necessary data could be extracted from such devices and, even if it could be obtained, the multi-tiered calculations would be exceedingly cumbersome. Finally, comment was received questioning whether the potential annual adjustment to theoretical hold required the gaming machine to be considered a new device for purposes of the gaming machine analysis report.

The Commission does not concur with the commenter recommendation that collecting the meter data on an annual basis is acceptable. With regards to the collection of wagering data from multi-game and multi-denominational gaming machines, the more data collected the greater the confidence in the analysis of patron betting habits and, consequently, the more reliable the identification of a reliable theoretical hold percentage. Due to the changes in machine mix and location that frequently occur on the gaming floor, the Commission believes the subject data should be collected on a quarterly basis. The Commission does not agree with the comment that the annual review and adjustment of the previously determined theoretical hold percentage is of no value. We agree with the premise that, if the gaming floor remained unaltered from one year to the next, the betting habits of the patrons are likely to remain constant. However, changes to the gaming floor are typically frequent, as management attempts to generate the greatest return on the square footage allocated to the gaming machine department. Such modifications may involve additions and removals of devices, movement of machines on the gaming floor, activation/deactivation of various game options (such as bonusing), changing the mix of games offered or increasing or restricting the different denominations accepted. Each of these management decisions can impact the theoretical hold of the multi-game and multi-denominational gaming machines in question. We can certainly understand management electing not to make an adjustment to the theoretical hold when the amount of the adjustment will have no significant impact on the reliability of the gaming machine analysis reports. However, due to the volatility of the gaming floor and the potential effect such volatility can have on patron betting habits, we believe the annual testing of previously determined theoretical hold percentages to be a necessary management practice.

The Commission appreciates the concern raised by a commenter regarding the process of determining a reliable theoretical hold percentage for multi-game devices that also accept multi-denomination wagers. The Commission acknowledges that the standard is intended to address either multi-game or multi-denomination but

is awkward in its application with regards to devices that possess both characteristics. The standard would imply that a multi-tiered level of weighted average calculations would be required. That, for each denomination within each game, the corresponding theoretical hold would be weighted by patron selection and then the resulting game weighted average theoretical hold would be weighted by patron game selection. Although the exercise would certainly produce a theoretical hold percentage for use in the game analysis report possessing a high level of confidence, we question whether such an in depth examination of the various theoretical percentages, weighted by patron selection, is necessary to identify a reasonable benchmark to measure actual game performance. Generally speaking, we believe it would be acceptable to calculate a simple weighted average of the various denominational theoretical hold percentages contained within each game, and then use that average theoretical hold percentage in the weighted average calculation based on patron game selection. Furthermore, to make additional reductions in the number of calculations, management might consider grouping games with similar theoretical hold percentages, *i.e.* those with a difference of less than 0.5 percentage points. In summation, it is important not to lose sight of the ultimate objective of the standards relevant to the statistical tracking of gaming performance, which is to employ a process that is effective in identifying deviations of actual performance from the manufacturer's specifications that warrant investigation. Such deviations may simply result from normal play, or be caused by gaming machine defect, malfunction, cheating, embezzlement, or other improper tampering. Relevant to this overall process is the fact that many frauds have occurred in Tribal gaming over the past few years involving false or fraudulent gaming machine payouts that could have been detected sooner, if the gaming operation had had an effective process for measuring the appropriateness of actual gaming machine performance.

In response to the question raised by a commenter whether the annual adjustment to theoretical hold percentage requires a gaming machine to be given a new machine (asset) number for purposes of the gaming machine analysis report, the Commission refers the commenter to section 542.13(h)(16). That section explicitly exempts annual theoretical hold adjustments made in accordance with section 542.13(h)(2) from the general requirement that the adjusted machine be treated as a new machine. Consequently, creation of a new machine number is not required when such adjustments occur.

Comments Regarding Proposed Deletion of ''Six Month'' Play Threshold and Addition of a ''100,000 Wagering Transactions'' Threshold for Required Analysis of Large Gaming Machine Variances Between Theoretical and Actual Hold

Comment was received recommending that, instead of the Commission just striking the six (6) month play threshold from section 542.13(h)(18), consideration should be given to replacing it with a threshold of 100,000 wagering transactions, which should be sufficient to trigger a gaming machine's required inclusion in the gaming machine analysis report. Comments were received strongly supporting the change from a specified time period to a fixed number of wagering transactions, to determine when a gaming machine should be included in the analysis of actual hold performance to theoretical hold. Comment was also received suggesting that the PAR sheets provide information more relevant to when a particular device has experienced sufficient play to be included in the gaming machine analysis process. Comment was also received suggesting that the recommended range of acceptable deviations from theoretical of +/−3 percentage points should be struck from the MICS. The commenter noted that it should be left up to the discretion of the TGRA as the primary gaming regulator to make the determination. Additional comment was also received recommending that it should also be left to the TGRA to determine when sufficient play exists to require the machine to be included in the gaming analysis report, since the performance of some devices should be examined prior to 100,000 wagering transactions, while others may require more play before any investigation of deviations between actual and theoretical performance is worthwhile. Finally, comment was received suggesting that a computerized application utilizing a volatility indexing mathematical program should be an acceptable alternative to the process required by the MICS. Such programs employ a mathematical formula that estimates the minimum and maximum ranges of acceptable theoretical payback/hold percentages for a given machine based on the following: (1) The theoretical payback/hold over the expected life of the machine; (2) the number of winning combinations; (3) the payback/hold for the winning combinations; and (4) the number of games played. In essence, the program considers the game characteristics and determines a tolerable range of accepted performance, which narrows as performance predictability increases. Typically predictability increases commensurate with increasing levels of wagering activity.

The Commission concurs with the commenter's recommendation that the standard would be better served by replacing the specified time period with a minimum number of wagering transactions. The proposed revision to section 542.13(h)(18) has, accordingly, been modified to reflect that recommendation. The Commission also appreciates the suggestion made by the commenter that determining when sufficient data exists to perform the analysis of actual game performance should include consideration of the data contained within the PAR sheet. It is important to recognize that the 100,000 wagering transaction standard establishes a minimum threshold for devices to be included in the required gaming machine analysis report; however, it is also well understood that the investigation of unacceptable deviations between actual and theoretical game performance is a complex process. To comment on how the Commission determined the proposed 100,000 wager transaction threshold, a random number generator (RNG) with a ten (10) million cycle will produce a range between minimum and maximum confidence factors of approximately three (3) percentage points, which we believe justifies an investigation of an unacceptable deviation, which industry practice would identify to be +/− 3 percentage points between actual hold and theoretical hold. However, the analyst should also consider the relevant PAR sheet in determining the extent to which follow-up analysis and investigation is warranted. For example, a multi-game device, particularly if it also accepts multi-denomination, may in fact need more than 100,000 wagering transactions before it is worthwhile to review past performance, *i.e.* look for an abnormally large payout within the audit period. With such a device, the analyst may determine that insufficient play has occurred to perform an in depth review of past performance and would merely document his/her determination. Within reason, we would not consider such a determination to be noncompliant with the standard.

The Commission does not agree with the commenter's suggestion that the recommended acceptable deviation range of +/− 3 percentage points be struck from the MICS. We believe the recommended range represents industry practice and is a reasonable threshold to ensure that the gaming machine analysis process will be effective. The Commission also disagrees with the commenter's recommendation that it should be left to the discretion of the TGRA to decide when a device must be included in the gaming machine analysis report. For the regulations governing the statistical tracking of gaming performance and the comparison of actual performance to the manufacturer's theoretical performance specifications to be effective, the regulation must be precise and reasonably uniform in defining its applicability. However, we do acknowledge that the analysis of the data possesses an element of subjectivity, which in turn necessitates that the analyst have a professional level of expertise. Inclusion of a gaming machine in the required gaming analysis report does not necessarily dictate that an in depth investigation of all variances is warranted, but does require that the gaming performance analyst/reviewer document the results of their determination.

Finally, the Commission appreciates the suggestion by a commenter that a volatility indexing mathematical program may produce results as reliable as, or even more reliable, than the weighted average calculation required for multi-game and multi-denominational gaming machines in the MICS. In response, it is noteworthy that at section 542.3(c), the TGRA is required to adopt regulations that provide a level of control that equals or exceeds the MICS. Although the rule does not condone the TGRA accepting management procedures that are in conflict with the MICS, it does not preclude acceptance of procedures or controls that are different and at least as stringent as those contained within the MICS. Furthermore, at section 542.13(b), computerized applications that provide at least the same level of control as the MICS are deemed to be acceptable under the current MICS. Based on the data provided by the commenter, it is the belief of the Commission that the noted mathematical formula would be an acceptable alternative procedure. However, it is incumbent upon management to adequately document the process and its effectiveness in providing the required level of control and reliability in analyzing game performance.

Comments Regarding the Proposed Revision of Section 542.13(m)(6) To Require Comparison of Bill-In Meter Readings With Total Bill Acceptor Drop Amounts for Each Drop Period Instead of Weekly

Comments were received concurring with the proposed revision. Comment was also received noting that the proposed standard is stricter, but also acknowledging that the impact on management's gaming machine accounting/audit function should be nominal. Finally, comment was received supporting the proposed revision and noting that it should make the follow-up process less cumbersome.

Comments Regarding the Proposed Revision of Section 542.13(m)(7) Requiring Follow-Up of Unresolved Variances Between the Currency Drop and Bill-In Meter Readings to Amounts Greater Than $25 and 3% Instead of $200.00

Comment was received suggesting language in the initially proposed revision to clarify the applicability of $25 or 3%. Comment was received objecting to the revision because it would allow variances to go uninvestigated that should be subjected to review. Basically, the commenter contends that the rule is too liberal and results in the control being ineffective. Comment was received recommending the threshold be 5% and $25.

The Commission accepts the commenter recommendation regarding more explicit language and has modified the proposed revision accordingly. The Commission understands the commenter concern for the rule becoming less stringent and possibly ineffective. However, the existing rule requires that a variance of $200 per machine per week must be investigated. Assuming the Tribal gaming operation performs a daily drop, the average variance threshold per day would be $28.57. Because the drop must exceed $833.33 before the 3% criteria becomes effective, for all practical purposes, the vast majority of variances will be subject to the $25 threshold. Consequently, we do not believe the revision will have a material impact on the effectiveness of the control. However, by changing the time frame from a week to a drop period, we believe the standard becomes more consistent with the workflows of the revenue audit process. The Commission does not concur with the recommendation that the threshold be increased to 5% or $25. With regards to drop amounts, the proposed rule results in the $25 threshold being applicable to drops of $25 to $833.33. The commenter recommendation would cause the $25 threshold to be applicable to drops of $25 to $500, which would, in effect, result in a lessening of the control. We do not believe there is a compelling basis for making the recommended change.

Proposed Revisions to Subsection 542.16(a)(1) General Controls for Gaming Hardware and Software

Deletion of Requirement in Vendor Software/Hardware Agreements That Vendors Agree To Adhere to Related Tribal Internal Controls

Since initial adoption, this standard has often been a troublesome requirement for management and Tribal gaming regulatory authorities to implement and enforce. The NIGC is not unsympathetic to the challenges created by the regulation when a vendor is uncooperative. Although not wishing to discourage Tribal regulators or gaming operators from striving to ensure that vendor products are compliant with all applicable Tribal laws and regulations, the NIGC does not believe such a control contained within the part 542 is appropriate as a minimum standard and proposes to delete and revise the Information Technology Section accordingly.

Comment was received supporting deletion of the standard, but noting that management should continue to be held accountable by the TGRA to ensure that agreements/contracts are not entered into that would cause the gaming operation to be noncompliant with any Tribal, State or Federal laws or regulations. Furthermore, the TGRA should not hesitate to enact and enforce such regulations of their own specific to vendor contract requirements. Comment was also received supporting deletion of the standard because it creates an undue hardship on management in the negotiation of vendor agreements. Additional comment was received supporting the deletion of the standard because violations by vendors are often difficult and troublesome to enforce, which causes the regulation to be fairly meaningless. Other comment was received objecting to deletion of the standard because it provides an added level of protection for Tribes from unscrupulous vendors in their gaming enterprises. Additional comment was received from a TGRA noting that, notwithstanding deletion of the standard from the MICS, the Tribe intends to keep the control in their

regulations, which is a Tribe's right as primary regulator under IGRA.

The Commission does not concur with the comments objecting to deletion of the standard. Although it could be argued that the Commission should exercise greater regulatory authority over gaming vendors to protect the integrity of Tribal gaming, we do not believe the standard in question represents an appropriate and effective vehicle for accomplishing that objective.

Proposed Revisions to Section 542.18 Regarding the Process for Commission Review and Determination of Tribal Requests for a Variance From the MICS in Their Tribal Internal Control Standards

To more clearly describe the current variance process, the NIGC proposes to revise section 542.18 of the MICS. Specifically, the revisions are intended to more clearly describe the authority and duties of the Chairman, his/her designee, and the full Commission, and the appeal rights of the Tribal petitioner. The proposed revisions are also proposed to ensure that an adequate factual investigation and record is developed for administrative and judicial review of the merits of the Chairman's decision on each variance request.

Comment was received supporting the proposed revisions. Comment was also received supporting the revisions, except for that part that prohibits the implementation of a TGRA approved variance until after concurrence has been received from the Commission. Comment was received questioning whether the petitioner Tribe has the authority to extend stipulated time frames in the variance process. Additional comment was received questioning whether the thirty (30) day period associated with a review by NIGC staff of a resubmission was sufficient. Further comment was received questioning the potential result of a petitioner objecting to an extension of a stipulated time period requested by NIGC staff. Specifically, the concern is that refusal of such a request might result in summary denial of the variance request. Comment was also received questioning the need for extensions of the time frames provided. A commenter represented that the stipulated time periods should be sufficient. Finally, comment was received suggesting that the Commission should consider variance requests only after they have been approved by the TGRA.

The Commission understands the commenter's objection to deferring implementation of a TGRA approved variance until receipt of Commission concurrence; however, to preserve the integrity of the MICS, the regulatory body responsible for its enactment must have the latitude to prohibit the implementation of procedures deemed to be unacceptable and contrary to the NIGC's MICS regulations. The Commission also recognizes that the variance concurrence process is one initiated by the petitioner. Therefore, the Commission would not be unreasonable in considering requests for additional time from the petitioner. It is noteworthy to such a position that the implementation of the proposed alternative procedure is precluded until after the Commission has concurred. The Commission acknowledges the concern expressed by a commenter regarding the time afforded NIGC staff to review a resubmission. Therefore, language has been added to enable staff to extend the period, subject to concurrence by the petitioner. The Commission understands the concern expressed by a commenter regarding a possible decision not to concur, if acceptance of an extension to a stipulated time period was not agreed. Certainly, the petitioner should be well aware that the investigation of pertinent facts and data associated with a variance request may take hours or many months, depending upon its complexity. Although requests for additional time should be reasonable and based on cause, the petitioner should also be well aware that the undue refusal to grant additional time may result in a determination different than that which would have otherwise been rendered, if the petitioners had agreed to the Chairman's request for more adequate time to investigate and decide their variance request. Notwithstanding the question pertaining to extension of time frames, the petitioner's right to appeal would continue to exist.

The Commission disagrees with the commenter's contention that time period extensions are not warranted. Although some variance requests can be readily addressed, particularly if the staff charged with performing the research has past experience with similar requests, most will involve extensive analysis. Seldom is a petition simply responded to. Instead, a filing will generally initiate a back and forth exchange with the petitioner as staff seeks additional information or clarifications regarding the requested variance. Alternative procedures involving new technology often involve travel by staff to consult with manufactures and other regulators or operators. Inherent to the analysis of a variance request is the identification of risk and evaluation of compensating controls. The time periods contained within the regulation will generally be appropriate for the more simple concurrence requests; however, complex requests will typically require one or more extensions of the allotted time frame. The Commission concurs with the commenter's suggestion regarding consideration of variance requests only after they have been approved by the TGRA. In accordance with the proposed rule, a variance request received by the Commission lacking evidence of the TGRA approval would not be considered. Since such a submission would lack authority.

Proposed Revisions To Add the Following New Sections to the MICS Establishing Minimum Standards for Computerized Key Security Systems

Section 542.21(t)–(w) What are the minimum internal controls for drop and count for Tier A gaming operations?

Section 542.31(t)–(w) What are the minimum internal controls for drop and count for Tier B gaming operations?

Section 542.41(t)–(w) What are the minimum internal controls for drop and count for Tier C gaming operations?

These are proposed new MICS sections. In recognition of an increasing number of gaming operations utilizing or considering the utilization of computerized key control systems, the NIGC has determined that regulations addressing such systems are warranted for Tier A, B, and C Tribal gaming operations.

Comment was received supporting the proposed revisions noting that electronic key control systems are becoming more prevalent. Comment was also received supporting the determination by the Commission to adopt standards specifically covering the use of computerized key control systems in Tier A, B, and C gaming operations and not rely solely on the general MICS regulation covering computerized applications. Comment was also received supporting the new regulation and noting that the controls also provide for an audit function. Comment was received supporting the new regulation, but noting that the TGRA should also consider more stringent standards. Comment was received recommending that the auditing procedures, particularly the quarterly inventory of keys, be performed by accounting/auditing personnel independent of the key control process. Additional comment was received questioning the need for the regulations since most of the controls are already in the MICS. Comment was received recommending

that the regulation more clearly differentiate the function of key custodian from system administrator. Comment was also received questioning the need for three persons to be involved in accessing the manual override key to open the box to perform repairs. It was noted that the persons accessing the box would not have access to the slot drop and count keys. For the purpose of making repairs, only two persons should be required to gain access to the manual override key.

The Commission disagrees with the commenter questioning the need for the new regulations. Computerized key control systems have been the subject of several Tribal variance requests over the past few years. Therefore, the Commission believes it appropriate to establish minimum standards specific to such systems. The Commission concurs with the commenter recommendation that the auditing procedures be performed by accounting/auditing personnel independent of the key control process. The proposed regulation for all three tiers has been changed accordingly. The Commission also concurs with the commenter's recommendation that the key custodian functions be more clearly defined and noted as being separate from those of the system administrator. Accordingly, the proposed revisions been modified in all three new sections to more clearly define separation of the two functions. The Commission also concurs with the commenter's suggestion that only two people be required to access the manual override key to make repairs to the key control box. Such access would not include access to the coin drop and count keys. The proposed revisions have been modified to reflect the suggestion of the commenter in all three proposed new MICS sections.

Regulatory Matters

Regulatory Flexibility Act

The Commission certifies that the proposed revisions to the Minimum Internal Control Standards contained within this regulation will not have a significant economic impact on small entities, 5 U.S.C. 605(b). The factual basis for this certification is as follows:

Of the 330 Indian gaming operations across the country, approximately 93 of the operations have gross revenues of less than $5 million. Of these, approximately 39 operations have gross revenues of under $1 million. Since the proposed revisions will not apply to gaming operations with gross revenues under $1 million, only 39 small operations may be affected. While this is a substantial number, the Commission believes that the proposed revisions will not have a significant economic impact on these operations for several reasons. Even before implementation of the original MICS, Tribes had internal controls because they are essential to gaming operations in order to protect assets. The costs involved in implementing these controls are part of the regular business costs incurred by such an operation. The Commission believes that many Indian gaming operation internal control standards that are more stringent than those contained in these regulations. Further, these proposed rule revisions are technical and minor in nature.

Under the proposed revisions, small gaming operations grossing under $1 million are exempted from MICS compliance. Tier A facilities (those with gross revenues between $1 and $5 million) are subject to the yearly requirement that independent certified public accountant testing occur. The purpose of this testing is to measure the gaming operation's compliance with the tribe's internal control standards. The cost of compliance with this requirement for small gaming operation is estimated at between $3,000 and $5,000. The cost of this report is minimal and does not create a significant economic effect on gaming operations. What little impact exists is further offset because other regulations require yearly independent financial audits that can be conducted at the same time. For these reasons, the Commission has concluded that the proposed rule revisions will not have a significant economic impact on those small entities subject to the rule.

Small Business Regulatory Enforcement Fairness Act

These following proposed revisions do not constitute a major rule under 5 U.S.C. 804(2), the Small Business Regulatory Enforcement Fairness Act. The revisions will not have an annual effect on the economy of $100 million or more. The revisions also will not cause a major increase in costs or prices for consumers, individual industries, federal, state or local government agencies or geographic regions and does not have a significant adverse effect on competition, employment, investment, productivity, innovation, or the ability of U.S. based enterprises to compete with foreign-based enterprises.

Unfunded Mandates Reform Act

The Commission is an independent regulatory agency and, as such, is not subject to the Unfunded Mandates Reform Act. Even so, the Commission has determined that the proposed rule revisions do not impose an unfunded mandate on State, local, or Tribal governments, or on the private sector, of more than $100 million per year. Thus, this is not a ''significant regulatory action'' under the Unfunded Mandates Reform Act, 2 U.S.C. 1501 *et seq.*

The Commission has, however, determined that the proposed rule revisions may have a unique effect on Tribal governments, as they apply exclusively to Tribal governments, whenever they undertake the ownership, operation, regulation, or licensing of gaming facilities on Indian lands, as defined by the Indian Gaming Regulatory Act. Thus, in accordance with Section 203 of the Unfunded Mandates Reform Act, the Commission undertook several actions to provide Tribal governments with adequate notice, opportunity for ''meaningful'' consultation, input, and shared information, advice, and education regarding compliance.

These actions included the formation of a Tribal Advisory Committee and the request for input from Tribal leaders. Section 204(b) of the Unfunded Mandates Reform Act exempts from the Federal Advisory Committee Act (5 U.S.C. App.) meetings with Tribal elected officials (or their designees) for the purpose of exchanging views, information, and advice concerning the implementation of intergovernmental responsibilities or administration. In selecting Committee members, consideration was placed on the applicant's experience in this area, as well as the size of the Tribe the nominee represented, geographic location of the gaming operation, and the size and type of gaming conducted. The Commission attempted to assemble a Committee that incorporates diversity and is representative of Tribal gaming interests. The Commission will meet with the Advisory Committee to discuss the public comments that are received as a result of the publication of the following proposed MICS rule revisions, and will consider all Tribal and public comments and Committee recommendations before formulating the final rule revisions. The Commission also plans to continue its policy of providing necessary technical assistance, information, and support to enable Tribes to implement and comply with the MICS as revised.

The Commission also provided the proposed revisions to Tribal leaders for comment prior to publication of this proposed rule and considered these comments in formulating the proposed rule.

Takings

In accordance with Executive Order 12630, the Commission has determined that the following proposed MICS rule revisions do not have significant takings implications. A takings implication assessment is not required.

Civil Justice Reform

In accordance with Executive Order 12988, the Office of General Counsel has determined that the following proposed MICS rule revisions do not unduly burden the judicial system and meet the requirements of sections 3(a) and 3(b)(2) of the Order.

Paperwork Reduction Act

The following proposed MICS rule revisions require information collection under the Paperwork Reduction Act 44 U.S.C. 3501 *et seq.*, as did the rule it revises. There is no change to the paperwork requirements created by these proposed revisions. The Commission's OMB Control Number for this regulation is 3141–0009.

National Environmental Policy Act

The Commission has determined that the following proposed MICS rule revisions do not constitute a major Federal action significantly affecting the quality of the human environment and that no detailed statement is required pursuant to the National Environmental Policy Act of 1969 (42 U.S.C. 4321 *et seq*).

List of Subjects in 25 CFR Part 542

Accounting, Auditing, Gambling, Indian-lands, Indian-tribal government, Reporting and recordkeeping requirements.

Accordingly, for all of the reasons set forth in the foregoing preamble, the National Indian Gaming Commission proposes to amend 25 CFR part 542 as follows:

PART 542—MINIMUM INTERNAL CONTROL STANDARDS

1. The authority citation for part 542 continues to read as follows:

Authority: 25 U.S.C. 2701 *et seq.*

2. Section 542.2 is amended by adding in alphabetical order the definitions for ''Drop Period'' and ''Series number'', and by revising the definitions for ''Gaming Machine'' and ''Promotional progressive pots and/or pools'' to read as follows:

§ 542.2 What are the definitions for this part?

* * * * *

Drop period means the period of time that occurs between sequential drops.

* * * * *

Gaming machine means an electronic or electromechanical machine that allows a player to play games of chance, some of which may be affected by skill, which contains a microprocessor with random number generator capability for outcome selection or computer terminal that accesses an outcome that is subsequently and randomly selected in drawings that are electronically conducted by central computer or other such methods of chance selection, whether mechanical or electronic. The machine is activated by the insertion of cash or cash equivalents and which awards cash, cash equivalents, merchandise, or a written statement of the player's accumulated credits, which written statements may be redeemable for cash.

* * * * *

Promotional progressive pots and/or pools means funds contributed to a table game or card game by and for the benefit of players. Funds are distributed to players based on a predetermined event.

* * * * *

Series number means the unique identifying number printed on each sheet of bingo paper that identifies the bingo paper as a series or packet. The series number is not the free space or center space number located on the bingo paper.

* * * * *

3. Amend § 542.7 by revising paragraph (g)(1)(i) to read as follows:

§ 542.7 What are the minimum internal control standards for bingo?

* * * * *

(g) * * *

(1) * * *

(i) If the electronic equipment contains a bill acceptor, then § 542.21(e) and (f), § 542.31(e) and (f), or § 542.41(e) and (f) (as applicable) shall apply.

* * * * *

4. Revise § 542.8 by revising paragraph (h)(1)(i) to read as follows:

§ 542.8 What are the minimum internal control standards for pull tabs?

* * * * *

(h) * * *

(1) * * *

(i) If the electronic equipment contains a bill acceptor, then § 542.21(e) and (f), § 542.31(e) and (f), or § 542.41(e) and (f) (as applicable) shall apply.

* * * * *

5. Amend § 542.12 by revising paragraphs (i)(4) and (k)(l)(v), (ix), and (xvii) to read as follows:

§ 542.12 What are the minimum internal control standards for table games?

* * * * *

(i) * * *

(4) The management in paragraph (i)(3) of this section shall investigate any unusual fluctuations in hold percentage with pit supervisory personnel.

* * * * *

(k) * * *

(1) * * *

* * * * *

(v) The marker form shall be prepared in at least triplicate form (triplicate form being defined as three parts performing the functions delineated in the standard in paragraph (k)(1)(vi) of this section), with a preprinted or concurrently-printed marker number, and utilized in numerical sequence. (This requirement shall not preclude the distribution of batches of markers to various pits.)

* * * * *

(ix) The forms required in paragraphs (k)(1)(v), (vi), and (viii) of this section shall be safeguarded, and adequate procedures shall be employed to control the distribution, use, and access to these forms.

* * * * *

(xvii) When partial payments are made in the pit, the payment slip of the marker that was originally issued shall be properly cross-referenced to the new marker number, completed with all information required by paragraph (k)(1)(xv) of this section, and inserted into the drop box.

* * * * *

5. Amend § 542.13 by revising paragraph (h), (1)(4), and (m)(6) and (7) to read as follows:

§ 542.13 What are the minimum internal control standards for gaming machines?

* * * * *

(h) Standards for evaluating theoretical and actual hold percentages.

(1) Accurate and current theoretical hold worksheets shall be maintained for each gaming machine.

(2) For multi-game/multi-denominational machines, an employee or department independent of the gaming machine department shall:

(i) Weekly, record the total coin-in meter;

(ii) Quarterly, record the coin-in meters for each paytable contained in the machine; and

(iii) On an annual basis, adjust the theoretical hold percentage in the gaming machine statistical report to a weighted average based upon the ratio of coin-in for each game paytable.

(3) For those gaming operations that are unable to perform the weighted average calculation as required by

paragraph (h)(2) of this section, the following procedures shall apply:

(i) On at least an annual basis, calculate the actual hold percentage for each gaming machine;

(ii) On at least an annual basis, adjust the theoretical hold percentage in the gaming machine statistical report for each gaming machine to the previously calculated actual hold percentage; and

(iii) The adjusted theoretical hold percentage shall be within the spread between the minimum and maximum theoretical payback percentages.

(4) The adjusted theoretical hold percentage for multi-game/multi-denominational machines may be combined for machines with exactly the same game mix throughout the year.

(5) The theoretical hold percentages used in the gaming machine analysis reports should be within the performance standards set by the manufacturer.

(6) Records shall be maintained for each machine indicating the dates and type of changes made and the recalculation of theoretical hold as a result of the changes.

(7) Records shall be maintained for each machine that indicate the date the machine was placed into service, the date the machine was removed from operation, the date the machine was placed back into operation, and any changes in machine numbers and designations.

(8) All of the gaming machines shall contain functioning meters that shall record coin-in or credit-in, or on-line gaming machine monitoring system that captures similar data.

(9) All gaming machines with bill acceptors shall contain functioning bill-in meters that record the dollar amounts or number of bills accepted by denomination.

(10) Gaming machine in-meter readings shall be recorded at least weekly (monthly for Tier A and Tier B gaming operations) immediately prior to or subsequent to a gaming machine drop. On-line gaming machine monitoring systems can satisfy this requirement. However, the time between readings may extend beyond one week in order for a reading to coincide with the end of an accounting period only if such extension is for no longer than six (6) days.

(11) The employee who records the in-meter reading shall either be independent of the hard count team or shall be assigned on a rotating basis, unless the in-meter readings are randomly verified quarterly for all gaming machines and bill acceptors by a person other than the regular in-meter reader.

(12) Upon receipt of the meter reading summary, the accounting department shall review all meter readings for reasonableness using pre-established parameters.

(13) Prior to final preparation of statistical reports, meter readings that do not appear reasonable shall be reviewed with gaming machine department employees or other appropriate designees, and exceptions documented, so that meters can be repaired or clerical errors in the recording of meter readings can be corrected.

(14) A report shall be produced at least monthly showing month-to-date, year-to-date (previous twelve (12) months data preferred), and if practicable, life-to-date actual hold percentage computations for individual machines and a comparison to each machine's theoretical hold percentage previously discussed.

(15) Each change to a gaming machine's theoretical hold percentage, including progressive percentage contributions, shall result in that machine being treated as a new machine in the statistical reports (*i.e.*, not commingling various hold percentages), except for adjustments made in accordance with paragraph (h)(2) of this section.

(16) If promotional payouts or awards are included on the gaming machine statistical reports, it shall be in a manner that prevents distorting the actual hold percentages of the affected machines.

(17) The statistical reports shall be reviewed by both gaming machine department management and management employees independent of the gaming machine department on at least a monthly basis.

(18) For those machines that have experienced at least 100,000 wagering transactions, large variances (three percent (3%) recommended) between theoretical hold and actual hold shall be investigated and resolved by a department independent of the gaming machine department with the findings documented and provided to the Tribal gaming regulatory authority upon request in a timely manner.

(19) Maintenance of the on-line gaming machine monitoring system data files shall be performed by a department independent of the gaming machine department. Alternatively, maintenance may be performed by gaming machine supervisory employees if sufficient documentation is generated and it is randomly verified on a monthly basis by employees independent of the gaming machine department.

(20) Updates to the on-line gaming machine monitoring system to reflect additions, deletions, or movements of gaming machines shall be made at least weekly prior to in-meter readings and the weigh process.

* * * * *

(l) * * *

(4) Reports, where applicable, adequately documenting the procedures required in paragraph (l)(3) of this section shall be generated and retained.

(m) * * *

(6) For each drop period, accounting/auditing employees shall compare the bill-in meter reading to the total bill acceptor drop amount for the period. Discrepancies shall be resolved before the generation/distribution of gaming machine statistical reports.

(7) Follow-up shall be performed for any one machine having an unresolved variance between actual currency drop and bill-in meter reading in excess of an amount that is both more than $25 and at least three percent (3%) of the actual currency drop. The follow-up performed and results of the investigation shall be documented, maintained for inspection, and provided to the Tribal gaming regulatory authority upon request.

* * * * *

6. Amend § 542.16 by revising paragraph (a)(1) introductory to read as follows:

§ 542.16 What are the minimum internal control standards for information technology?

(a) * * *

(1) Management shall take an active role in making sure that physical and logical security measures are implemented, maintained, and adhered to by personnel to prevent unauthorized access that could cause errors or compromise data or processing integrity.

* * * * *

7. Revise § 542.18 to read as follows:

§ 542.18 How does a gaming operation apply for a variance from the standards of the part?

(a) *Tribal gaming regulatory authority approval.* (1) A Tribal gaming regulatory authority may approve a variance for a gaming operation if it has determined that the variance will achieve a level of control sufficient to accomplish the purpose of the standard it is to replace.

(2) For each enumerated standard for which the Tribal gaming regulatory authority approves a variance, it shall submit to the Chairman of the NIGC, within thirty (30) days, a detailed report, which shall include the following:

(i) A detailed description of the variance;

(ii) An explanation of how the variance achieves a level of control sufficient to accomplish the purpose of the standard it is to replace; and

(iii) Evidence that the Tribal gaming regulatory authority has approved the variance.

(3) In the event that the Tribal gaming regulatory authority or the Tribe chooses to submit a variance request directly to the Chairman, it may do so without the approval requirement set forth in paragraph (a)(2)(iii) of this section and such request shall be deemed as having been approved by the Tribal gaming regulatory authority.

(b) *Review by the Chairman.* (1) Following receipt of the variance approval, the Chairman or his or her designee shall have sixty (60) days to concur with or object to the approval of the variance.

(2) Any objection raised by the Chairman shall be in the form of a written explanation based upon the following criteria:

(i) There is no valid explanation of why the gaming operation should have received a variance approval from the Tribal gaming regulatory authority on the enumerated standard; or

(ii) The variance as approved by the Tribal gaming regulatory authority does not provide a level of control sufficient to accomplish the purpose of the standard it is to replace.

(3) If the Chairman fails to object in writing within sixty (60) days after the date of receipt of a complete submission, the variance shall be considered concurred with by the Chairman.

(4) The 60-day deadline may be extended, provided such extension is mutually agreed upon by the Tribal gaming regulatory authority and the Chairman.

(c) *Curing Chairman's objections.* (1) Following an objection by the Chairman to the issuance of a variance, the Tribal gaming regulatory authority shall have the opportunity to cure any objections noted by the Chairman.

(2) A Tribal gaming regulatory authority may cure the objections raised by the Chairman by:

(i) Rescinding its initial approval of the variance; or

(ii) Rescinding its initial approval, revising the variance, approving it, and re-submitting it to the Chairman.

(3) Upon any re-submission of a variance approval, the Chairman shall have thirty (30) days to concur with or object to the re-submitted variance.

(4) If the Chairman fails to object in writing within thirty (30) days after the date of receipt of the re-submitted variance, the re-submitted variance shall be considered concurred with by the Chairman.

(5) The thirty (30) day deadline may be extended, provided such extension is mutually agreed upon by the Tribal gaming regulatory authority and the Chairman.

(d) *Appeals.* (1) Upon receipt of objections to a re-submission of a variance, the Tribal gaming regulatory authority shall be entitled to an appeal to the full Commission in accordance with the following process:

(i) Within thirty (30) days of receiving an objection to a re-submission, the Tribal gaming regulatory authority shall file its notice of appeal.

(ii) Failure to file an appeal within the time provided by this section shall result in a waiver of the opportunity for an appeal.

(iii) An appeal under this section shall specify the reasons why the Tribal gaming regulatory authority believes the Chairman's objections should be reviewed, and shall include supporting documentation, if any.

(iv) The Tribal gaming regulatory authority shall be provided with any comments offered by the Chairman to the Commission on the substance of the appeal by the Tribal gaming regulatory authority and shall be offered the opportunity to respond to any such comments.

(v) Within thirty (30) days after receipt of the appeal, the Commission shall render a decision based upon the criteria contained within paragraph (b)(2) of this section unless the Tribal gaming regulatory authority elects to wave the thirty (30) day requirement and to provide the Commission additional time, not to exceed an additional thirty (30) days, to render a decision.

(vi) In the absence of a decision within the time provided, the Tribal gaming regulatory authority's re-submission shall be considered concurred with by the Commission and become effective.

(2) The Tribal gaming regulatory authority may appeal the Chairman's objection to the approval of a variance to the full Commission without resubmitting the variance by filling a notice of appeal with the full Commission within thirty (30) days of the Chairman's objection and complying with the procedures described in paragraph (d)(1) of this section.

(e) *Effective date of variance.* The gaming operation shall comply with standards that achieve a level of control sufficient to accomplish the purpose of the standard it is to replace until such time as the Commission objects to the Tribal gaming regulatory authority's approval of a variance as provided in paragraph (b) of this section. Concurrence in a variance by the Chairman or Commission is discretionary and variances will not be granted routinely. The gaming operation shall comply with standards at least as stringent as those set forth in this part until such time as the Chairman or Commission concurs with the Tribal gaming regulatory authority's approval of a variance.

8. Amend § 542.21 by adding paragraphs (t), (u), (v), and (w) to read as follows:

§ 542.21 What are the minimum internal controls for drop and count for Tier A gaming operations?

* * * * *

(t) *Gaming machine computerized key security systems.* (1) Computerized key security systems which restrict access to the gaming machine drop and count keys through the use of passwords, keys or other means, other than a key custodian, must provide the same degree of control as indicated in the aforementioned key control standards; refer to paragraphs (l), (o), (q) and (s) of this section. Note: This standard does not apply to the system administrator. The system administrator is defined in paragraph (t)(2)(i) of this section.

(2) For computerized key security systems, the following additional gaming machine key control procedures apply:

(i) Management personnel independent of the gaming machine department assign and control user access to keys in the computerized key security system (*i.e.*, system administrator) to ensure that gaming machine drop and count keys are restricted to authorized employees.

(ii) In the event of an emergency or the key box is inoperable, access to the emergency manual key(s) (a.k.a. override key), used to access the box containing the gaming machine drop and count keys, requires the physical involvement of at least three persons from separate departments, including management. The date, time, and reason for access, must be documented with the signatures of all participating employees signing out/in the emergency manual key(s).

(iii) The custody of the keys issued pursuant to paragraph (t)(2)(ii) of this section requires the presence of two persons from separate departments from the time of their issuance until the time of their return.

(iv) Routine physical maintenance that requires accessing the emergency

manual key(s) (override key) and does not involve the accessing of the gaming machine drop and count keys, only requires the presence of two persons from separate departments. The date, time and reason for access must be documented with the signatures of all participating employees signing out/in the emergency manual key(s).

(3) For computerized key security systems controlling access to gaming machine drop and count keys, accounting/audit personnel, independent of the system administrator, will perform the following procedures:

(i) Daily, review the report generated by the computerized key security system indicating the transactions performed by the individual(s) that adds, deletes, and changes user's access within the system (*i.e.*, system administrator). Determine whether the transactions completed by the system administrator provide an adequate control over the access to the gaming machine drop and count keys. Also, determine whether any gaming machine drop and count key(s) removed or returned to the key cabinet by the system administrator was properly authorized.

(ii) For at least one day each month, review the report generated by the computerized key security system indicating all transactions performed to determine whether any unusual gaming machine drop and count key removals or key returns occurred.

(iii) At least quarterly, review a sample of users that are assigned access to the gaming machine drop and count keys to determine that their access to the assigned keys is adequate relative to their job position.

(iv) All noted improper transactions or unusual occurrences are investigated with the results documented.

(4) Quarterly, an inventory of all count room, drop box release, storage rack and contents keys is performed, and reconciled to records of keys made, issued, and destroyed. Investigations are performed for all keys unaccounted for, with the investigation being documented.

(u) *Table games computerized key security systems.* (1) Computerized key security systems which restrict access to the table game drop and count keys through the use of passwords, keys or other means, other than a key custodian, must provide the same degree of control as indicated in the aforementioned key control standards; refer to paragraphs (m), (n), (p) and (r) of this section. Note: This standard does not apply to the system administrator. The system administrator is defined in paragraph (u)(2)(ii) of this section.

(2) For computerized key security systems, the following additional table game key control procedures apply:

(i) Management personnel independent of the table game department assign and control user access to keys in the computerized key security system (*i.e.*, system administrator) to ensure that table game drop and count keys are restricted to authorized employees.

(ii) In the event of an emergency or the key box is inoperable, access to the emergency manual key(s) (a.k.a. override key), used to access the box containing the table game drop and count keys, requires the physical involvement of at least three persons from separate departments, including management. The date, time, and reason for access, must be documented with the signatures of all participating employees signing out/in the emergency manual key(s).

(iii) The custody of the keys issued pursuant to paragraph (u)(2)(ii) of this section requires the presence of two persons from separate departments from the time of their issuance until the time of their return.

(iv) Routine physical maintenance that requires accessing the emergency manual key(s) (override key) and does not involve the accessing of the table games drop and count keys, only requires the presence of two persons from separate departments. The date, time and reason for access must be documented with the signatures of all participating employees signing out/in the emergency manual key(s).

(3) For computerized key security systems controlling access to table games drop and count keys, accounting/audit personnel, independent of the system administrator, will perform the following procedures:

(i) Daily, review the report generated by the computerized key security system indicating the transactions performed by the individual(s) that adds, deletes, and changes user's access within the system (*i.e.*, system administrator). Determine whether the transactions completed by the system administrator provide an adequate control over the access to the table games drop and count keys. Also, determine whether any table games drop and count key(s) removed or returned to the key cabinet by the system administrator was properly authorized.

(ii) For at least one day each month, review the report generated by the computerized key security system indicating all transactions performed to determine whether any unusual table games drop and count key removals or key returns occurred.

(iii) At least quarterly, review a sample of users that are assigned access to the table games drop and count keys to determine that their access to the assigned keys is adequate relative to their job position.

(iv) All noted improper transactions or unusual occurrences are investigated with the results documented.

(4) Quarterly, an inventory of all count room, table game drop box release, storage rack and contents keys is performed, and reconciled to records of keys made, issued, and destroyed. Investigations are performed for all keys unaccounted for, with the investigations being documented.

(v) *Emergency drop procedures.* Emergency drop procedures shall be developed by the Tribal gaming regulatory authority, or the gaming operation as approved by the Tribal gaming regulatory authority.

(w) *Equipment standards for gaming machine count.* (1) A weigh scale calibration module shall be secured so as to prevent unauthorized access (*e.g.*, prenumbered seal, lock and key, etc.).

(2) A person independent of the cage, vault, gaming machine, and count team functions shall be required to be present whenever the calibration module is accessed. Such access shall be documented and maintained.

(3) If a weigh scale interface is used, it shall be adequately restricted so as to prevent unauthorized access (passwords, keys, etc.).

(4) If the weigh scale has a zero adjustment mechanism, it shall be physically limited to minor adjustments (*e.g.*, weight of a bucket) or physically situated such that any unnecessary adjustments to it during the weigh process would be observed by other count team members.

(5) The weigh scale and weigh scale interface (if applicable) shall be tested by a person or persons independent of the cage, vault, and gaming machine departments and count team at least quarterly. At least annually, this test shall be performed by internal audit in accordance with the internal audit standards. The result of these tests shall be documented and signed by the person or persons performing the test.

(6) Prior to the gaming machine count, at least two employees shall verify the accuracy of the weigh scale with varying weights or with varying amounts of previously counted coin for each denomination to ensure the scale is properly calibrated (varying weights/coin from drop to drop is acceptable).

(7) If a mechanical coin counter is used (instead of a weigh scale), the Tribal gaming regulatory authority, or the gaming operation as approved by the Tribal gaming regulatory authority, shall establish and the gaming operation shall comply, with procedures that are equivalent to those described in paragraphs (u)(4), (u)(5), and (u)(6) of this section.

(8) If a coin meter count machine is used, the count team member shall record the machine number denomination and number of coins in ink on a source document, unless the meter machine automatically records such information.

(i) A count team member shall test the coin meter count machine prior to the actual count to ascertain if the metering device is functioning properly with a predetermined number of coins for each denomination.

(ii) [Reserved]

9. Amend § 542.31 by adding paragraphs (t), (u), (v), and (w) to read as follows:

§ 542.31 What are the minimum internal controls for drop and count Tier B gaming operations?

* * * * *

(t) *Gaming machine computerized key security systems.* (1) Computerized key security systems which restrict access to the gaming machine drop and count keys through the use of passwords, keys or other means, other than a key custodian, must provide the same degree of control as indicated in the aforementioned key control standards; refer to paragraphs (l), (o), (q) and (s) of this section. Note: This standard does not apply to the system administrator. The system administrator is defined in paragraph (t)(2)(i) of this section.

(2) For computerized key security systems, the following additional gaming machine key control procedures apply:

(i) Management personnel independent of the gaming machine department assign and control user access to keys in the computerized key security system (*i.e.*, system administrator) to ensure that gaming machine drop and count keys are restricted to authorized employees.

(ii) In the event of an emergency or the key box is inoperable, access to the emergency manual key(s) (*a.k.a.* override key), used to access the box containing the gaming machine drop and count keys, requires the physical involvement of at least three persons from separate departments, including management. The date, time, and reason for access, must be documented with the signatures of all participating employees signing out/in the emergency manual key(s).

(iii) The custody of the keys issued pursuant to paragraph (t)(2)(ii) of this section, requires the presence of two persons from separate departments from the time of their issuance until the time of their return.

(iv) Routine physical maintenance that requires accessing the emergency manual key(s) (override key) and does not involve the accessing of the gaming machine drop and count keys, only requires the presence of two persons from separate departments. The date, time and reason for access must be documented with the signatures of all participating employees signing out/in the emergency manual key(s).

(3) For computerized key security systems controlling access to gaming machine drop and count keys, accounting/audit personnel, independent of the system administrator, will perform the following procedures:

(i) Daily, review the report generated by the computerized key security system indicating the transactions performed by the individual(s) that adds, deletes, and changes user's access within the system (*i.e.*, system administrator). Determine whether the transactions completed by the system administrator provide an adequate control over the access to the gaming machine drop and count keys. Also, determine whether any gaming machine drop and count key(s) removed or returned to the key cabinet by the system administrator was properly authorized.

(ii) For at least one day each month, review the report generated by the computerized key security system indicating all transactions performed to determine whether any unusual gaming machine drop and count key removals or key returns occurred.

(iii) At least quarterly, review a sample of users that are assigned access to the gaming machine drop and count keys to determine that their access to the assigned keys is adequate relative to their job position.

(iv) All noted improper transactions or unusual occurrences are investigated with the results documented.

(4) Quarterly, an inventory of all count room, drop box release, storage rack and contents keys is performed, and reconciled to records of keys made, issued, and destroyed. Investigations are performed for all keys unaccounted for, with the investigation being documented.

(u) *Table games computerized key security systems.* (1) Computerized key security systems which restrict access to the table game drop and count keys through the use of passwords, keys or other means, other than a key custodian, must provide the same degree of control as indicated in the aforementioned key control standards; refer to paragraphs (m), (n), (p) and (r) of this section. Note: This standard does not apply to the system administrator. The system administrator is defined in paragraph (u)(2)(ii) of this section.

(2) For computerized key security systems, the following additional table game key control procedures apply:

(i) Management personnel independent of the table game department assign and control user access to keys in the computerized key security system (*i.e.*, system administrator) to ensure that table game drop and count keys are restricted to authorized employees.

(ii) In the event of an emergency or the key box is inoperable, access to the emergency manual key(s) (*a.k.a.* override key), used to access the box containing the table game drop and count keys, requires the physical involvement of at least three persons from separate departments, including management. The date, time, and reason for access, must be documented with the signatures of all participating employees signing out/in the emergency manual key(s).

(iii) The custody of the keys issued pursuant to paragraph (u)(2)(ii) of this section, requires the presence of two persons from separate departments from the time of their issuance until the time of their return.

(iv) Routine physical maintenance that requires accessing the emergency manual key(s) (override key) and does not involve the accessing of the table games drop and count keys, only requires the presence of two persons from separate departments. The date, time and reason for access must be documented with the signatures of all participating employees signing out/in the emergency manual key(s).

(3) For computerized key security systems controlling access to table games drop and count keys, accounting/audit personnel, independent of the system administrator, will perform the following procedures:

(i) Daily, review the report generated by the computerized key security system indicating the transactions performed by the individual(s) that adds, deletes, and changes user's access within the system (*i.e.*, system administrator). Determine whether the transactions completed by the system administrator provide an adequate control over the access to the table games drop and count keys. Also,

determine whether any table games drop and count key(s) removed or returned to the key cabinet by the system administrator was properly authorized.

(ii) For at least one day each month, review the report generated by the computerized key security system indicating all transactions performed to determine whether any unusual table games drop and count key removals or key returns occurred.

(iii) At least quarterly, review a sample of users that are assigned access to the table games drop and count keys to determine that their access to the assigned keys is adequate relative to their job position.

(iv) All noted improper transactions or unusual occurrences are investigated with the results documented.

(4) Quarterly, an inventory of all count room, table game drop box release, storage rack and contents keys is performed, and reconciled to records of keys made, issued, and destroyed. Investigations are performed for all keys unaccounted for, with the investigations being documented.

(v) *Emergency drop procedures.* Emergency drop procedures shall be developed by the Tribal gaming regulatory authority, or the gaming operation as approved by the Tribal gaming regulatory authority.

(w) *Equipment standards for gaming machine count.* (1) A weigh scale calibration module shall be secured so as to prevent unauthorized access (*e.g.*, prenumbered seal, lock and key, etc.).

(2) A person independent of the cage, vault, gaming machine, and count team functions shall be required to be present whenever the calibration module is accessed. Such access shall be documented and maintained.

(3) If a weigh scale interface is used, it shall be adequately restricted so as to prevent unauthorized access (passwords, keys, etc.).

(4) If the weigh scale has a zero adjustment mechanism, it shall be physically limited to minor adjustments (*e.g.*, weight of a bucket) or physically situated such that any unnecessary adjustments to it during the weigh process would be observed by other count team members.

(5) The weigh scale and weigh scale interface (if applicable) shall be tested by a person or persons independent of the cage, vault, and gaming machine departments and count team at least quarterly. At least annually, this test shall be performed by internal audit in accordance with the internal audit standards. The result of these tests shall be documented and signed by the person or persons performing the test.

(6) Prior to the gaming machine count, at least two employees shall verify the accuracy of the weigh scale with varying weights or with varying amounts of previously counted coin for each denomination to ensure the scale is properly calibrated (varying weights/coin from drop to drop is acceptable).

(7) If a mechanical coin counter is used (instead of a weigh scale), the Tribal gaming regulatory authority, or the gaming operation as approved by the Tribal gaming regulatory authority, shall establish and the gaming operation shall comply, with procedures that are equivalent to those described in paragraphs (u)(4), (u)(5), and (u)(6) of this section.

(8) If a coin meter count machine is used, the count team member shall record the machine number denomination and number of coins in ink on a source document, unless the meter machine automatically records such information.

(i) A count team member shall test the coin meter count machine prior to the actual count to ascertain if the metering device is functioning properly with a predetermined number of coins for each denomination.

(ii) [Reserved]

10. Amend § 542.41 by adding paragraphs (t), (u), (v), and (w) to read as follows:

§ 542.41 What are the minimum internal controls for drop and count for Tier C gaming operations?

* * * * *

(t) *Gaming machine computerized key security systems.* (1) Computerized key security systems which restrict access to the gaming machine drop and count keys through the use of passwords, keys or other means, other than a key custodian, must provide the same degree of control as indicated in the aforementioned key control standards; refer to paragraphs (l), (o), (q) and (s) of this section. Note: This standard does not apply to the system administrator. The system administrator is defined in paragraph (t)(2)(i) of this section.

(2) For computerized key security systems, the following additional gaming machine key control procedures apply:

(i) Management personnel independent of the gaming machine department assign and control user access to keys in the computerized key security system (*i.e.*, system administrator) to ensure that gaming machine drop and count keys are restricted to authorized employees.

(ii) In the event of an emergency or the key box is inoperable, access to the emergency manual key(s) (*a.k.a.* override key), used to access the box containing the gaming machine drop and count keys, requires the physical involvement of at least three persons from separate departments, including management. The date, time, and reason for access, must be documented with the signatures of all participating employees signing out/in the emergency manual key(s).

(iii) The custody of the keys issued pursuant to paragraph (t)(2)(ii) of this section requires the presence of two persons from separate departments from the time of their issuance until the time of their return.

(iv) Routine physical maintenance that requires accessing the emergency manual key(s) (override key) and does not involve the accessing of the gaming machine drop and count keys, only requires the presence of two persons from separate departments. The date, time and reason for access must be documented with the signatures of all participating employees signing out/in the emergency manual key(s).

(3) For computerized key security systems controlling access to gaming machine drop and count keys, accounting/audit personnel, independent of the system administrator, will perform the following procedures:

(i) Daily, review the report generated by the computerized key security system indicating the transactions performed by the individual(s) that adds, deletes, and changes user's access within the system (*i.e.*, system administrator). Determine whether the transactions completed by the system administrator provide an adequate control over the access to the gaming machine drop and count keys. Also, determine whether any gaming machine drop and count key(s) removed or returned to the key cabinet by the system administrator was properly authorized.

(ii) For at least one day each month, review the report generated by the computerized key security system indicating all transactions performed to determine whether any unusual gaming machine drop and count key removals or key returns occurred.

(iii) At least quarterly, review a sample of users that are assigned access to the gaming machine drop and count keys to determine that their access to the assigned keys is adequate relative to their job position.

(iv) All noted improper transactions or unusual occurrences are investigated with the results documented.

(4) Quarterly, an inventory of all count room, drop box release, storage rack and contents keys is performed,

and reconciled to records of keys made, issued, and destroyed. Investigations are performed for all keys unaccounted for, with the investigation being documented.

(u) *Table games computerized key security systems.* (1) Computerized key security systems which restrict access to the table game drop and count keys through the use of passwords, keys or other means, other than a key custodian, must provide the same degree of control as indicated in the aforementioned key control standards; refer to paragraphs (m), (n), (p) and (r) of this section. Note: This standard does not apply to the system administrator. The system administrator is defined in paragraph (u)(2)(ii) of this section.

(2) For computerized key security systems, the following additional table game key control procedures apply:

(i) Management personnel independent of the table game department assign and control user access to keys in the computerized key security system (*i.e.,* system administrator) to ensure that table game drop and count keys are restricted to authorized employees.

(ii) In the event of an emergency or the key box is inoperable, access to the emergency manual key(s) (a.k.a. override key), used to access the box containing the table game drop and count keys, requires the physical involvement of at least three persons from separate departments, including management. The date, time, and reason for access, must be documented with the signatures of all participating employees signing out/in the emergency manual key(s).

(iii) The custody of the keys issued pursuant to paragraph (u)(2)(ii) of this section requires the presence of two persons from separate departments from the time of their issuance until the time of their return.

(iv) Routine physical maintenance that requires accessing the emergency manual key(s) (override key) and does not involve the accessing of the table games drop and count keys, only requires the presence of two persons from separate departments. The date, time and reason for access must be documented with the signatures of all participating employees signing out/in the emergency manual key(s).

(3) For computerized key security systems controlling access to table games drop and count keys, accounting/audit personnel, independent of the system administrator, will perform the following procedures:

(i) Daily, review the report generated by the computerized key security system indicating the transactions performed by the individual(s) that adds, deletes, and changes user's access within the system (*i.e.,* system administrator). Determine whether the transactions completed by the system administrator provide an adequate control over the access to the table games drop and count keys. Also, determine whether any table games drop and count key(s) removed or returned to the key cabinet by the system administrator was properly authorized.

(ii) For at least one day each month, review the report generated by the computerized key security system indicating all transactions performed to determine whether any unusual table games drop and count key removals or key returns occurred.

(iii) At least quarterly, review a sample of users that are assigned access to the table games drop and count keys to determine that their access to the assigned keys is adequate relative to their job position.

(iv) All noted improper transactions or unusual occurrences are investigated with the results documented.

(4) Quarterly, an inventory of all count room, table game drop box release, storage rack and contents keys is performed, and reconciled to records of keys made, issued, and destroyed. Investigations are performed for all keys unaccounted for, with the investigations being documented.

(v) *Emergency drop procedures.* Emergency drop procedures shall be developed by the Tribal gaming regulatory authority, or the gaming operation as approved by the Tribal gaming regulatory authority.

(w) *Equipment standards for gaming machine count.* (1) A weigh scale calibration module shall be secured so as to prevent unauthorized access (*e.g.,* prenumbered seal, lock and key, etc.).

(2) A person independent of the cage, vault, gaming machine, and count team functions shall be required to be present whenever the calibration module is accessed. Such access shall be documented and maintained.

(3) If a weigh scale interface is used, it shall be adequately restricted so as to prevent unauthorized access (passwords, keys, etc.).

(4) If the weigh scale has a zero adjustment mechanism, it shall be physically limited to minor adjustments (*e.g.,* weight of a bucket) or physically situated such that any unnecessary adjustments to it during the weigh process would be observed by other count team members.

(5) The weigh scale and weigh scale interface (if applicable) shall be tested by a person or persons independent of the cage, vault, and gaming machine departments and count team at least quarterly. At least annually, this test shall be performed by internal audit in accordance with the internal audit standards. The result of these tests shall be documented and signed by the person or persons performing the test.

(6) Prior to the gaming machine count, at least two employees shall verify the accuracy of the weigh scale with varying weights or with varying amounts of previously counted coin for each denomination to ensure the scale is properly calibrated (varying weights/coin from drop to drop is acceptable).

(7) If a mechanical coin counter is used (instead of a weigh scale), the Tribal gaming regulatory authority, or the gaming operation as approved by the Tribal gaming regulatory authority, shall establish and the gaming operation shall comply, with procedures that are equivalent to those described in paragraphs (u)(4), (u)(5), and (u)(6) of this section.

(8) If a coin meter count machine is used, the count team member shall record the machine number denomination and number of coins in ink on a source document, unless the meter machine automatically records such information.

(i) A count team member shall test the coin meter count machine prior to the actual count to ascertain if the metering device is functioning properly with a predetermined number of coins for each denomination.

(ii) [Reserved]

Signed in Washington, DC, this 19th day of November, 2004.

Philip N. Hogen,

Chairman.

Nelson Westrin,

Vice-Chairman.

Cloyce Choney,

Commissioner.

[FR Doc. 04–26041 Filed 11–30–04; 8:45 am]

BILLING CODE 7565–01–P

ENVIRONMENTAL PROTECTION AGENCY

40 CFR Part 52

[R10–OAR–2004–OR–0001; FRL–7839–4]

Approval and Promulgation of Air Quality Implementation Plans; Oregon; Removal of Perchloroethylene Dry Cleaning Systems Rules

AGENCY: Environmental Protection Agency (EPA).

ACTION: Proposed rule.

SUMMARY: In this action, EPA is proposing to approve a revision to the Oregon State Implementation Plan and repeal rules which are no longer required by the Clean Air Act. The revision consists of the repeal of Oregon's control technology guidelines for perchloroethylene (perc) dry cleaning systems. Perc is a solvent commonly used in dry cleaning, maskant operations, and degreasing operations. In 1996, EPA excluded perc from the Federal definition of volatile organic compounds for the purpose of preparing state implementation plans to attain the national ambient air quality standards for ozone under title I of the Clean Air Act. Emissions from perc dry cleaners continue to be regulated as hazardous air pollutants under the National Emissions Standards for Hazardous Air Pollutants.

DATES: Comments must be received on or before January 3, 2005.

ADDRESSES: Submit your comments, identified by Docket ID No. R10–OAR–2004–OR–0001, by one of the following methods:

- Federal eRulemaking Portal: *http://www.regulations.gov.* Follow the on-line instructions for submitting comments.
- Agency Web site: *http://www.epa.gov/edocket.* EDOCKET, EPA's electronic public docket and comment system, is EPA's preferred method for receiving comments. Follow the on-line instructions for submitting comments.
- Mail: Colleen Huck, Office of Air, Waste and Toxics, AWT–107, EPA, Region 10, 1200 Sixth Ave., Seattle, Washington 98101.
- Hand Delivery: Colleen Huck, Office of Air, Waste and Toxics, AWT–107, 9th Floor, EPA, Region 10, 1200 Sixth Ave., Seattle, Washington 98101. Such deliveries are only accepted during normal hours of operation, and special arrangements should be made for deliveries of boxed information.

Please see the direct final rule which is located in the Rules section of this **Federal Register** for detailed instructions on how to submit comments.

FOR FURTHER INFORMATION CONTACT: Colleen Huck at telephone number: (206) 553–1770, e-mail address: *Huck.Colleen@epa.gov;* or Donna Deneen at telephone number: (206) 553–6706, e-mail address: *Deneen.Donna@epa.gov,* fax number: (206) 553–0110, or the above EPA, Region 10 address.

SUPPLEMENTARY INFORMATION: For further information, please see the direct final action, of the same title, which is located in the Rules and Regulations section of this **Federal Register**. EPA is approving the State's SIP revision as a direct final rule without prior proposal because EPA views this as a noncontroversial SIP revision and anticipates no adverse comments. A detailed rationale for the approval is set forth in the preamble to the direct final rule. If EPA receives no adverse comments, EPA will not take further action on this proposed rule.

If EPA receives adverse comments, EPA will withdraw the direct final rule and it will not take effect. EPA will address all public comments in a subsequent final rule based on this proposed rule. EPA will not institute a second comment period on this action. Any parties interested in commenting on this action should do so at this time. Please note that if we receive adverse comment on an amendment, paragraph, or section of this rule and if that provision may be severed from the remainder of the rule, EPA may adopt as final those provisions of the rule that are not the subject of an adverse comment.

Dated: October 29, 2004.

Richard Albright,

Acting Regional Administrator, Region 10.

[FR Doc. 04–26475 Filed 11–30–04; 8:45 am]

BILLING CODE 6560–50–P

ENVIRONMENTAL PROTECTION AGENCY

40 CFR Parts 60 and 63

[OAR–2002–0056; FRL–7844–8]

RIN 2060–AJ65

Proposed National Emission Standards for Hazardous Air Pollutants; and, in the Alternative, Proposed Standards of Performance for New and Existing Stationary Sources, Electric Utility Steam Generating Units: Notice of Data Availability

AGENCY: Environmental Protection Agency (EPA).

ACTION: Notice of data availability (NODA).

SUMMARY: EPA issued a proposed Clean Air Mercury Rule (CAMR) under the Clean Air Act (CAA) concerning coal- and oil-fired electric utility steam generating units (power plants) on January 30, 2004,[1] and a supplemental proposal on March 16, 2004.[2] The proposed CAMR represents the first-ever Federal action to regulate mercury (Hg) from this source category. The proposed rule presents two primary alternative approaches to regulating Hg and nickel (Ni) from power plants. EPA received numerous comments on its proposed regulatory approaches, including comments on the modeling results EPA obtained using the Integrated Planning Model (IPM), which is a model that predicts how the power sector will respond to a particular regulatory approach, and comments addressing the speciation of Hg. EPA is currently evaluating those comments to determine how the new data and information received in the comments, as described below, may affect the benefit-cost analysis and regulatory options under consideration. Although we recognize that the public has access to the comments in the rulemaking docket, we are issuing the NODA, in part, because the Agency received over 680,000 public comments, including almost 5,000 unique comments, and the comments present new data and information that are relevant to the two primary regulatory approaches addressed in the proposed CAMR.

We are also issuing the NODA to seek input on our benefits methodology, which has been preliminarily revised since the CAMR was proposed. An analysis of benefits and costs is consistent with principles of good government and the provisions of Executive Order (EO) 12866. Based on comments received on the proposal and in furtherance of our obligations under EO 12866, we have preliminarily revised our approach to analyzing the benefits of reducing Hg emissions from power plants, and we are seeking comment on that revised approach, which is described in Section III below. Some of the commenters suggested approaches that differ from EPA's proposed revised benefits methodology. We identify those comments in Section III, as well as other comments that we received that provide analyses relevant to our refined benefits methodology.

DATES: Comments on the NODA must be received on or before January 3, 2005.

ADDRESSES: Comments on the NODA should be submitted to Docket ID No. OAR–2002–0056. Comments may be submitted by one of the following methods:

- Federal eRulemaking Portal: *http://www.regulations.gov.* Follow the on-line instructions for submitting comments.
- Agency Web site: *http://www.epa.gov/edocket.* EDOCKET, EPA's electronic public docket and comment system, is EPA's preferred method for receiving comments. Follow the on-line instructions for submitting comments.
- E-mail: *A-and-R-Docket@epa.gov.*

[1] 69 FR 4652, January 30, 2004.

[2] 69 FR 12398, March 16, 2004.

• Mail: Air Docket, Clean Air Mercury Rule, Environmental Protection Agency, Mail Code: 6102T, 1200 Pennsylvania Avenue, NW., Washington, DC 20460. Please include a total of two copies.

• Hand Delivery: EPA Docket Center, 1301 Constitution Avenue, NW., Room B108, Washington, DC. Such deliveries are only accepted during the Docket's normal hours of operation, and special arrangements should be made for deliveries of boxed information.

Instructions: Direct your comments on the NODA to Docket ID No. OAR–2002–0056. The EPA's policy is that all comments received will be included in the public docket(s) without change and may be made available online at *http://www.epa.gov/edocket*, including any personal information provided, unless the comment includes information claimed to be Confidential Business Information (CBI) or other information whose disclosure is restricted by statute. Do not submit information that you consider to be CBI or otherwise protected through EDOCKET, regulations.gov, or e-mail. The EPA EDOCKET and the Federal regulations.gov websites are ''anonymous access'' systems, which means EPA will not know your identity or contact information unless you provide it in the body of your comment. If you send an e-mail comment directly to EPA without going through EDOCKET or regulations.gov, your e-mail address will be automatically captured and included as part of the comment that is placed in the public docket and made available on the Internet. If you submit an electronic comment, EPA recommends that you include your name and other contact information in the body of your comment and with any disk or CD-ROM you submit. If EPA cannot read your comment due to technical difficulties and cannot contact you for clarification, EPA may not be able to consider your comment. Electronic files should avoid the use of special characters, any form of encryption, and be free of any defects or viruses.

Docket: All documents in the docket are listed in the EDOCKET index at *http://www.epa.gov/edocket.* Although listed in the index, some information is not publicly available, *i.e.*, CBI or other information whose disclosure is restricted by statute. Certain other material, such as copyrighted material, is not placed on the Internet and will be publicly available only in hard copy form. Publicly available docket materials are available either electronically in EDOCKET or in hard copy at the EPA Docket Center, EPA West, Room B102, 1301 Constitution Avenue, NW., Washington, DC. The Public Reading Room is open from 8:30 a.m. to 4:30 p.m., Monday through Friday, excluding legal holidays. The telephone number for the Public Reading Room is (202) 566–1744, and the telephone number for the Air Docket is (202) 566–1742.

FOR FURTHER INFORMATION CONTACT: William Maxwell, U.S. EPA, Office of Air Quality Planning and Standards, Emission Standards Division, Combustion Group (C439–01), Research Triangle Park, North Carolina 27711, telephone number (919) 541–5430, e-mail at *maxwell.bill@epa.gov.*

SUPPLEMENTARY INFORMATION:

Outline: The information presented in this NODA is organized as follows:

I. Additional Information on Submitting Comments
A. How can I help EPA ensure that my comments are reviewed quickly?
B. What should I consider as I prepare my comments for EPA?
1. Submitting CBI
2. Tips for Preparing Your Comments
II. Electric Utility Sector Modeling and Hg Speciation
A. What is the relevant background?
B. What are the specific issues relevant to electric utility sector modeling?
1. Overview
2. What is IPM?
3. What specific comments did EPA receive on its IPM modeling in response to the January 2004 proposal and the March 2004 supplemental proposal?
4. What are the areas of ongoing EPA research?
C. Issues of Hg Speciation
1. Overview
2. What specific comments on Hg speciation did EPA receive in response to the January 2004 proposal and the March 2004 supplemental proposal?
3. What are the areas of ongoing EPA research?
III. EPA's Proposed Revised Benefits Assessment
A. What is the relevant background?
B. How is EPA estimating reductions in Hg exposure associated with the CAMR?
C. Step 1 of EPA's Proposed Revised Benefits Methodology: Analyzing Hg Emissions from Other Sources
1. Overview
2. What specific comments did EPA receive on Hg emissions from other sources in response to the January 2004 proposal and the March 2004 supplemental proposal?
D. Step 2 of EPA's Proposed Revised Benefits Methodology: Analyzing Air Dispersion Modeling Capabilities
1. Overview
2. What specific comments did EPA receive on air dispersion modeling capabilities in response to the January 2004 proposal and the March 2004 supplemental proposal?
E. Step 3 of EPA's Proposed Revised Benefits Methodology: Modeling Ecosystem Dynamics
1. Overview
2. What specific comments did EPA receive on modeling ecosystem dynamics in response to the January 2004 proposal and the March 2004 supplemental proposal?
F. Step 4 of EPA's Proposed Revised Benefits Methodology: Fish Consumption and Human Exposure
1. Overview
2. What specific comments did EPA receive on fish consumption patterns in response to the January 2004 proposal and the March 2004 supplemental proposal?
G. Step 5 of EPA's Proposed Revised Benefits Methodology: How Will Reductions in Population-level Exposure Improve Public Health?

I. Additional Information on Submitting Comments

A. How Can I Help EPA Ensure That My Comments Are Reviewed Quickly?

To expedite review of your comments by Agency staff, you are encouraged to send a separate copy of your comments, in addition to the copy you submit to the official docket, to William Maxwell, U.S. EPA, Office of Air Quality Planning and Standards, Emission Standards Division, Mail Code C439–01, Research Triangle Park, North Carolina 27711, telephone (919) 541–5430, e-mail *maxwell.bill@epa.gov.*

B. What Should I Consider as I Prepare My Comments for EPA?

1. *Submitting CBI.* Do not submit this information to EPA through EDOCKET, regulations.gov, or e-mail. Clearly mark the part or all of the information that you claim to be CBI. For CBI information in a disk or CD ROM that you mail to EPA, mark the outside of the disk or CD ROM as CBI and then identify electronically within the disk or CD ROM the specific information that is claimed as CBI. In addition to one complete version of the comment that includes information claimed as CBI, a copy of the comment that does not contain the information claimed as CBI must be submitted for inclusion in the public docket. Information so marked will not be disclosed except in accordance with procedures set forth in 40 CFR part 2.

2. *Tips for Preparing Your Comments.* When submitting comments, remember to:

a. Identify the rulemaking by docket number and other identifying information (subject heading, **Federal Register** date and page number).

b. Follow directions—The Agency may ask you to respond to specific questions or organize comments by

referencing a Code of Federal Regulations (CFR) part or section number.

c. Explain why you agree or disagree; suggest alternatives and substitute language for your requested changes.

d. Describe any assumptions and provide any technical information and/or data that you used.

e. If you estimate potential costs or burdens, explain how you arrived at your estimate in sufficient detail to allow for it to be reproduced.

f. Provide specific examples to illustrate your concerns, and suggest alternatives.

g. Explain your views as clearly as possible, avoiding the use of profanity or personal threats.

h. Make sure to submit your comments by the comment period deadline identified.

II. Electric Utility Sector Modeling and Hg Speciation

A. What Is the Relevant Background?

On January 30, 2004, EPA issued a proposed CAMR under the CAA concerning power plants.[3] That proposed rule presents two primary approaches to regulating Hg and Ni from power plants. Those approaches are (1) retaining the Agency's December 20, 2000, determination that regulating power plants under CAA section 112 is ''appropriate and necessary'' and issuing final emission standards under CAA section 112(d); and (2) revising our December 2000 ''appropriate and necessary'' determination, removing power plants from the CAA section 112(c) list, and issuing final standards of performance for coal-fired power plants using a ''cap-and-trade'' methodology.[4]

In response to the January 2004 proposal and the March 2004 supplemental proposal, we received over 680,000 public comments, including almost 5,000 unique comments. Among other things, the comments addressed how the power sector could respond to different levels of control on Hg emissions. In particular, we received comments on EPA's IPM modeling results, including our modeling assumptions. We also received modeling analyses conducted by different commenters, some of which used models and/or assumptions different from EPA's. Based on the importance of, and the level of interest in, these modeling analyses, this NODA summarizes the modeling analyses performed by commenters and solicits comment on the inputs and assumptions underlying those analyses and other issues related to benefit-cost analysis.

We also received comments concerning the speciation of Hg. As we explained in the proposed rule, the degree to which emissions control devices can remove Hg depends, in large part, on the amount of each form (or species) of Hg present in the flue gas. The three relevant species of Hg are elemental Hg (Hg^0), ionic or oxidized Hg (Hg^{+2}), and particulate Hg (Hg_p).[5] The Hg in the flue gas from a coal-fired utility unit consists of these three forms of Hg. Because of the importance of the relationship between Hg speciation and the level of Hg reduction achievable, we are seeking additional information on Hg speciation from coal-fired power plants to further inform our regulatory decision.

The comments concerning the impact of different levels of emissions control on the power sector and the speciation of Hg relate to both of the two proposed regulatory approaches described above. With respect to the CAA section 112(d) regulatory approach, the comments are relevant to whether EPA should adopt a CAA section 112(d) standard that is more stringent than the floor (*i.e.*, a beyond-the-floor standard) and at what level such a standard should be set. In evaluating a beyond-the-floor standard under CAA section 112(d), EPA must consider cost, nonair quality health and environmental impacts, and energy impacts.[6] With respect to the CAA section 111 regulatory approach, the comments are relevant to the level at which standards of performance should be set. Similar to the beyond-the-floor analysis under CAA section 112(d), EPA must consider cost, nonair quality health and environmental impacts, and energy requirements in defining the best system of emission reduction under CAA section 111.

We recognize that the public already has access to the comments submitted on the January 2004 proposed rule and the March 2004 supplemental proposal. However, because of the large volume of comments received on those proposals, we issue the NODA today to summarize and solicit comment on the new data and information presented in the comments that are relevant to benefit-cost analysis and to the regulatory approaches under consideration.

The Agency intends to make a final decision on its pending utility proposal by March 15, 2005. EPA is still considering the comments submitted on the proposal and supplemental proposal and evaluating which regulatory approach to pursue.

B. What Are the Specific Issues Relevant to Electric Utility Sector Modeling?

1. *Overview.* This section of the NODA addresses how the power sector is predicted to respond to different levels of emissions control. As we explained in the proposed CAMR, in designing regulatory programs for the electric power sector, it is important to consider (forecast) ways the power sector could respond to such programs.

In the proposed CAMR, EPA provided a forecast of how the power generation mix in the United States (U.S.) would respond to a particular regulatory approach.[7] In response to the proposed rule, several commenters provided their own forecasts of power sector response. In some cases, the regulatory scenarios modeled by commenters were the same or similar to those modeled by EPA. In these cases, we can better understand the importance of different input assumptions by comparing and contrasting the modeling performed. In other cases, the commenters modeled alternative approaches and provided information about the tradeoffs in regulatory design. The submitted modeling addresses regulatory alternatives that are both more and less stringent than our proposal. In all cases, the models are designed to predict a least-cost solution to meeting electricity demand, subject to the model input assumptions and constraints imposed. These constraints can include restrictions on the availability of specific control technologies. EPA is currently performing an evaluation of the modeling analyses submitted by commenters.

To aid in our decision-making process, we are seeking comment on the different input assumptions and constraints and the different modeled regulatory approaches as presented in the commenter's modeling analyses described below. We also identify below our questions of particular interest concerning the new data and information presented in the comments.

2. *What is IPM?* EPA uses IPM, developed by ICF Consulting (ICF), to assess how the electric power industry will respond to various environmental policies affecting that industry. IPM is a dynamic linear programming model that can be used to examine air pollution

[3] 69 FR 4652, January 30, 2004.

[4] The Agency also proposed standards of performance for oil-fired power plants that emit Ni. Although the Agency received several comments concerning its alternative proposals to regulate Ni from oil-fired power plants under CAA section 111 and CAA section 112, those comments are not the subject of this NODA. This NODA instead focuses only on issues related to Hg.

[5] 69 FR 4652, January 30, 2004.

[6] 42 U.S.C. 7412(d).

[7] 69 FR 4706, January 30, 2004.

control policies for Hg and other pollutants throughout the contiguous U.S. for the entire power system. IPM finds the least-cost solution to meeting electricity demand subject to environmental, transmission, reserve margin, and other system operating constraints for any specified region and time period. For a given control policy, IPM provides an electricity generator with various compliance options, including adding pollution controls, changing fuel type, and changing dispatch considerations. In addition, IPM provides information on fuel market interactions and impacts on the cost of electricity.

Through licensing agreements with ICF, IPM is used by both public and private sector clients. EPA contracted with ICF to develop a version of IPM that EPA uses for its own power sector modeling. EPA has used IPM to model the nitrogen oxides (NO_X) State implementation plan (SIP) call, the Clear Skies legislative proposal, the proposed Clean Air Interstate Rule (CAIR), and the proposed CAMR.[8] Documentation for how EPA has configured IPM for pollution control analysis can be found at *http://www.epa.gov/airmarkets/epa-ipm*.

Since it began using IPM as a power sector modeling tool, EPA has periodically reviewed and updated the assumptions and modeling capability of IPM. These updates have included the addition to IPM of the capability to model Hg emissions and Hg control costs. However, EPA recognizes that its Hg-related assumptions are more uncertain than sulfur dioxide (SO_2)- and NO_X-related assumptions due to limited information on controlling Hg from the power sector. This is because, although we have recent data on Hg emissions from the power sector, and some data on how the Hg speciation profile influences the ability to control Hg emissions, the electric power industry has much less experience implementing Hg controls than it does SO_2 and NO_X controls. Further, as described later in this NODA, the full impact of the mix of the various Hg species found in the flue gas on the level of control achievable continues to be investigated.[9]

[8] 69 FR 4652, January 30, 2004.

[9] 69 FR 12401, March 16, 2004.

As discussed further below, some of the commenters submitted analyses using IPM. EPA's power sector modeling of the proposed CAMR CAA section 112(d) maximum achievable control technology (MACT) alternative using IPM 2003 is available in the docket in a memorandum titled ''Economic and Energy Impact Analysis for the Proposed Utility MACT Rulemaking'' (OAR–2002–0056–0048). EPA's power sector modeling of the proposed CAMR CAA section 111 trading rule can also be found in the docket at OAR–2002–0056–0338 to –0344.

3. *What specific comments did EPA receive on its IPM modeling in response to the January 2004 proposal and the March 2004 supplemental proposal?* During the comment period, EPA received numerous comments related to the regulatory approaches outlined in the January 2004 proposal and the March 2004 supplemental proposal. EPA received specific comments on the power sector modeling results from the following commenters: Center for Clean Air Policy (CCAP) (OAR–2002–0056–3447); Cinergy (OAR–2002–0056–4317 and –4318); Clean Air Task Force (CATF), Natural Resources Defense Council (NRDC), *et al.* (OAR–2002–0056–3459 and –3460); Edison Electric Institute (EEI) (OAR–2002–0056–2929, –4894, –4895, and –4896); and Electric Power Research Institute (EPRI) (OAR–2002–0056–2578).

Two of these commenters submitted the results of power sector modeling using a version of IPM and two commenters submitted analyses using a similar linear programming model. The CCAP submitted analyses of multi-pollutant control options for the power sector using a version similar to IPM 2003 employing different assumptions about electricity demand growth and natural gas prices. Cinergy submitted analyses performed using a version of IPM operated by ICF that included Cinergy's own unique modeling assumptions. The CATF submitted analyses on behalf of several environmental groups using EPA's IPM 2003. EEI submitted an analysis performed by Charles River Associates (CRA) using the Electric Power Market Model (EPMM; a linear programing model similar to IPM). The EPRI comments included the same EPMM analysis. The salient details of the individual analyses are described below.

a. *What were the results of CCAP's power sector modeling?* CCAP established a stakeholder policy dialogue on alternative designs of multi-pollutant legislative programs designed to control emissions from the power sector. Their analysis was performed using a version of IPM similar to EPA's IPM 2003 with different assumptions about electricity demand growth and natural gas prices. Some modeling was conducted using EPA's IPM 2002 assumptions about demand growth and natural gas prices, and some modeling analysis was conducted using the Energy Information Administration (EIA) assumptions about demand growth and natural gas prices.

CCAP sponsored a series of modeling runs to look at the costs and benefits of incremental changes in Hg cap levels and timing. The analysis was based on policy options similar to the Clear Skies proposal, using the same SO_2 and NO_X caps and first phase Hg cap of 26 tons. Among the options analyzed, CCAP examined three scenarios that implemented incrementally more stringent Hg requirements in Phase 2: 15-ton cap in 2018 (Clear Skies), 10-ton cap in 2015, and 7.5-ton cap in 2015.

Although their comments included several other modeling runs, for comparison purposes EPA has summarized in Table 1 below CCAP's model runs assuming EIA AEO2003 gas and growth assumptions. EPA notes that the term ''total installed capacity'' used in Table 1 includes all currently installed controls and control retrofits needed to meet the modeled policy. EPA also notes that CCAP's results for the Phase 2 cap of 15 tons are taken from EPA's analyses of the Clear Skies Act. CCAP recommended that EPA adopt a tighter Phase 2 cap for the proposed Hg trading rule, concluding that incremental changes in the timing and stringency of a Hg cap have, in CCAP's opinion, relatively modest cost implications.

TABLE 1.—SUMMARY OF CCAP POWER SECTOR MODELING

	Hg phase 2 cap of 15 tons		Hg phase 2 cap of 10 tons		Hg phase 2 cap of 7.5 tons	
	2010	2020	2010	2020	2010	2020
Hg emissions	25 tons	18 tons	21 tons	13 tons	19 tons	11 tons.
Annual costs ($1999)	$3.3 billion	$6.7 billion	$4.3 billion	$6.8 billion	$4.6 billion	$7.1 billion.
Present value (2005–2025).	$64.5 billion		$71.3 billion		$75.0 billion	
Hg Marginal costs in 2020.	$62,190/lb		$75,190/lb		$88,060/lb	
Total installed capacity:						
FGD	179 GW	228 GW	171 GW	223 GW	174 GW	220 GW.
SCR	173 GW	229 GW	173 GW	214 GW	173 GW	213 GW.
ACI	13 GW	40 GW	34 GW	70 GW	46 GW	84 GW.

b. *What were the results of Cinergy's power sector modeling?* Cinergy used IPM to analyze the economic and environmental impact of potential CAIR and Hg policies. Cinergy used a version of IPM offered by ICF to its private sector clients. In addition, Cinergy provided their own modeling assumptions that differ from those used by EPA, including higher electricity demand growth, higher natural gas prices, different costs for subbituminous coal switching, higher costs for pollution control retrofits, and a higher discount rate.

The scenarios modeled by Cinergy included a CAIR only scenario, ''CAIR plus Hg trading'' scenario, ''CAIR plus EPA MACT'' scenario, and ''CAIR plus stringent MACT'' scenario. The ''CAIR plus stringent MACT'' scenario has no subcategorization and a 0.88 pounds per trillion British thermal units (lb/TBtu) rate for all affected units, starts in 2008, and assumes that ACI is not commercially available until 2010. Results of the Cinergy analysis of Hg reduction scenarios are summarized in Table 2 below. Present value costs are for a 20-year period and assume a 7 percent discount rate. Although Cinergy's modeling assumed the availability of ACI, Cinergy raised concerns about the availability and performance of ACI in the 2008 to 2010 timeframe.

For the CAIR only scenario, Cinergy's analysis projects a Hg co-benefit level in 2010 of 38 tons. For the ''CAIR plus Hg trading'' scenario, the Cinergy analysis projected Hg marginal costs from 2010 to 2020 to reach the safety valve price of $35,000/lb. Cinergy's model also projected lower bituminous coal consumption, 25 percent higher subbituminous coal consumption, and 10 percent higher lignite coal consumption when compared to EPA's Hg trading results. For the ''CAIR plus stringent MACT'' scenario, Cinergy modeling concluded that, due to the lack of ACI controls, units had to switch to lower Hg coals, install flue gas desulfurization/selective catalytic reduction (FGD/SCR), or shut down in order to achieve compliance. In addition, Cinergy concluded that an unrealistic number of FGD/SCR were installed by 2008 in order to meet the MACT limit (about 10 gigawatt (GW) of FGD and 30 GW of SCR). The Cinergy analysis projected that units burning subbituminous and lignite coals would shut down for 2 years because no technologies would exist until 2010 to comply with stringent MACT emissions limits. Cinergy's analyses predicted that natural gas- and oil-fired units would be operated to make up the generation short fall. This resulted in significant increases in power prices and fuel prices in the short term. Once ACI became available in the model in 2010, units installed such controls and started operating again.

TABLE 2.—SUMMARY OF CINERGY POWER SECTOR MODELING

	Hg trading plus CAIR		Proposed CAMR MACT plus CAIR		Stringent MACT plus CAIR	
	2010	2020	2010	2020	2010	2020
Hg emissions	32 tons	26 tons	33 tons	30 tons	9 tons	9 tons.
Present Value ($2000) for 20 year.	$65 billion		$64 billion		$130 billion	
Total installed capacity:						
FGD	150 GW	200 GW	160 GW	180 GW	180 GW	180 GW.
SCR	150 GW	160 GW	140 GW	170 GW	165 GW	175 GW.
ACI	10 GW	25 GW	15 GW	20 GW	120 GW	120 GW.

* **Note:** No annual costs were provided by Cinergy in their comments.

c. *What were the results of CATF's power sector modeling?* CATF modeled two MACT scenarios with the assistance of ICF using EPA's IPM 2003. The two scenarios modeled were: (1) EPA's CAMR MACT alternative proposal in combination with EPA's CAIR proposal (''CAMR MACT plus CAIR''), and (2) an ''Alternative Mercury Control Scenario.'' In their comments, CATF states that their ''Alternate Mercury Control Scenario'' is consistent with EPA's proposed ''CAMR MACT'' approach of basing subcategories on fuel rank; however, CATF notes that the emission rates used by EPA in its modeling do not represent what they believe to be MACT. The CATF states that their analysis is provided to ''demonstrate that more stringent Hg emission rates are feasible and highly cost-effective.''

The alternative emission rates CATF evaluated are standards representing 90 percent Hg reduction (measured as a reduction from the Hg content in the input coal) for bituminous-fired units,

1.5 lb/TBtu for subbituminous-fired units, and 4.5 lb/TBtu for lignite-fired units. As stated in the CATF comments, the 90 percent level was specified for bituminous-fired units because the version of IPM used by CATF could not simulate Hg reductions any higher than 90 percent through the use of retrofitted control technology. EPA notes, however, that IPM can model reductions greater than 90 percent through fuel switching, dispatch changes, or retirements.

A summary of the CATF analysis of the EPA proposed ''CAMR MACT plus CAIR'' and ''Alternative Mercury Control Scenario'' plus CAIR is provided in Table 3 below. EPA notes that the term ''total installed capacity'' used in Table 3 below includes all currently installed controls and control retrofits needed to meet modeled policy. EPA further notes that EPA's Base Case 2003 projects about 115 GW of scrubbers and 116 GW of SCR by 2010.

TABLE 3.—SUMMARY OF CATF POWER SECTOR MODELING

	CAMR MACT plus CAIR		Alternative Mercury Control Scenario plus CAIR	
	2010	2020	2010	2020
Hg emissions	26 tons	23 tons	12 tons	12 tons.
Annual costs ($1999)	$5.7 billion	$7.1 billion	$8.4 billion	$7.7 billion.
Total installed capacity:				
FGD	193 GW	233 GW	221 GW	224 GW.
SCR	145 GW	177 GW	172 GW	174 GW.
ACI	17 GW	19 GW	102 GW	102 GW.

* **Note:** No present value costs were provided by CATF in their comments.

CATF concluded that the ''Alternate Mercury Control Scenario'' results in shifts toward more bituminous coal use (in 2020, about 7 percent from Base Case 2003) and declines in subbituminous and lignite coal use (in 2020, about 27 percent and 13 percent from Base Case 2003, respectively). CATF projected a similar shift in reaction to EPA's proposed ''MACT plus CAIR'' scenario (*i.e.*, increase of about 5 percent for bituminous, decreases of about 24 percent and 15 percent for subbituminous and lignite, respectively). In addition, CATF concluded that the ''Alternate Mercury Control Scenario'' reduces coal use in 2020 by less than 1 percent compared to EPA's proposed ''CAMR MACT plus CAIR'' scenario, to a level that would be about 6 percent above current (2001) electric power generation coal consumption.

d. *What were the results of EEI's power sector modeling?* EEI's power sector modeling was performed using CRA's EPMM model. As noted above, EPRI's comments included the same CRA EPMM modeling analysis as EEI. Some of the EPMM modeling assumptions differ from those of EPA, including higher natural gas prices, higher electric growth demand, different Hg co-benefit assumptions for NO_X and SO_2 controls, and different costs and performance for ACI. The scenarios modeled by EEI include a CAIR-only scenario, ''CAIR plus EPA MACT'' scenario, and three ''CAIR plus Hg trading'' scenarios. EEI modeled two cases of the EPA-proposed Hg trading scenario with a 34-ton first-phase cap in 2010 and a 15-ton second phase cap in 2018. (Note that EPA did not propose a 34-ton first-phase cap but, rather, took comment on the appropriate level of the Phase 1 cap.) One of EEI's cases assumed a 2.5 percent annual improvement in variable operating costs for ACI, and the other did not include this assumption. EEI also modeled an alternative Hg trading scenario with a 24-ton cap in 2015 and a 15-ton cap in 2018, assuming 2.5 percent annual improvement in variable operating costs for ACI. Under this alternative option, early reduction credits can be earned and banked during the period 2010 to 2014 through early application of Hg control technologies (*e.g.*, ACI). To simulate early reduction credits, the EEI analysis set caps equal to co-benefits during this period. The co-benefits were defined as the Hg emissions from the comparable CAIR-only scenario, 39.9 tons in 2010 and 2011, and 38.5 tons for 2012 through 2014.

Results of the EEI analysis of Hg reduction scenarios are summarized in Table 4 below. Present value costs in Table 4 are for 2004 to 2020 and assume an 8 percent discount rate, consistent with EEI's analysis. For Hg trading scenarios, EPA notes that EEI projected emissions of 15 tons in 2020 appear to be an artifact of the grouping of the 2020 run year with the model end run year of 2040. EPA maintains that, in a least-cost solution model like EPMM, the model would solve for the cap in the final run year grouping. Therefore, Hg emissions reported for trading scenarios in the table below are those projected for 2019, because EPA believes they better represent emissions in 2020, *i.e.*, if 2020 had not been grouped with 2040. The Hg trading scenarios have been modeled without a safety valve.

EEI's analysis also included information on projected technology retrofits. EEI notes in their comments that these projections reflect the quantities necessary to comply with the proposed rules and may not reflect what is feasible to retrofit or what is commercially available. EEI also noted in their comments, that although they modeled the availability of ACI at 90 percent removal, the cost and effectiveness of ACI control technology remains uncertain, especially on subbituminous coal-fired units.

TABLE 4.—SUMMARY OF EEI POWER SECTOR MODELING*

	Proposed CAMR MACT plus CAIR		Hg trading plus CAIR		Hg trading plus CAIR (improved ACI costs)		Alternative Hg trading plus CAIR (improved ACI costs)	
	2010	2020	2010	2020	2010	2020	2010	2020
Hg emissions**	32 tons	30 tons	34 tons	24 tons	34 tons	24 tons	37 tons	23 tons.
Annual costs ($1999).	$4.4 billion	$6.8 billion	$2.5 billion	$8.1 billion	$2.5 billion	$8.0 billion	$2.6 billion	$7.7 billion.

TABLE 4.—SUMMARY OF EEI POWER SECTOR MODELING*—Continued

	Proposed CAMR MACT plus CAIR		Hg trading plus CAIR		Hg trading plus CAIR (improved ACI costs)		Alternative Hg trading plus CAIR (improved ACI costs)	
	2010	2020	2010	2020	2010	2020	2010	2020
Present value (2004–2020).	$27.8 billion		$19.7 billion		$19.1 billion		$19.4 billion	
Hg marginal costs in 2020.	Not applicable		$37,285/lb		$32,536/lb		$32,536/lb	
Total installed capacity:								
FGD	153 GW	180 GW	128 GW	192 GW	128 GW	193 GW	129 GW	195 GW.
SCR	134 GW	153 GW	120 GW	148 GW	121 GW	148 GW	121 GW	148 GW.
ACI	67 GW	67 GW	16 GW	107 GW	16 GW	112 GW	16 GW	112 GW.

* EPRI comments submitted the same modeling analysis.
** Emission results are presented for 2019.

4. *What are the areas of ongoing EPA research?* EPA is in the process of evaluating the above comments and data and, as noted above, has developed certain preliminary reactions to the comments. We are seeking comment on certain aspects of the above modeling analyses. As demonstrated by the above summaries of the comments, estimates of the impact of Hg regulation on the power sector are sensitive to model input assumptions. To increase the accuracy of EPA's power sector modeling as related to forecasting the power sector's response to environmental regulatory programs, we are seeking comment and/or additional information to inform our regulatory decision.

Moreover, since the January 2004 proposal and the March 2004 supplemental proposal, we have become aware of new information on the ability of sorbent injection technologies to remove Hg emissions from coal-fired power plants (*e.g.*, results of ACI testing over a period of several months at Southern Company's Plant Gaston, brominated activated carbon (B*PAC™) injection at Detroit Edison's St. Clair Power Plant, *etc*.). To this end, the Agency is seeking updated information on issues that may be relevant to assessing the assumptions employed in our power sector modeling (*e.g.*, removal efficiencies, capital and operating and maintenance (O&M) costs, timeline for commercialization, balance of plant issues, *etc*.). Specifically, we are interested in obtaining information on:

a. In some of EEI's analyses, EEI assumed a 2.5 percent annual improvement in variable operating costs for ACI. Is it appropriate for an economic forecast to assume an improvement in costs over time (such as through technology cost reductions or through future technology innovation), and, if yes, what level of improvement in costs should be assumed?

b. Due to model size considerations, limited knowledge on achievable levels of Hg control, and limited knowledge on assessing the full impact of the Hg speciation profile on control, IPM has limited Hg control retrofit options. Currently, IPM assumes that Hg reductions are achieved only through use of SCR and FGD or ACI (with or without fabric filter). (EPA notes that Hg reductions in IPM can also be achieved through fuel switching, dispatch changes, and retirements.) Should other control options be considered in EPA's power sector modeling (*e.g.*, retrofit of fabric filters and electrostatic precipitators, pre-combustion controls, and the optimization of SO_2 or NO_X controls)?

c. To the extent commenters believe that control considerations other than those noted in the proposal or in the preceding paragraphs should be included in power sector modeling, EPA is seeking data on the timeline for commercialization, cost, balance of plant issues, and performance of such control options.

d. CATF and Cinergy both modeled more stringent MACT-type options. However, CATF assumed that ACI would be available in 2005 for all coal types, while Cinergy assumed that ACI would be available in 2010 for all coal types for one MACT scenario modeled. (EPA notes that for Cinergy's other modeled scenarios, including a MACT scenario, it assumed ACI would be available in 2005.) The year of availability for ACI is an assumption that appears to have made a large difference in the projected impacts of a MACT-type option. (Note that in a January 2004 white paper, we projected that ACI technology would be available for commercial application after 2010 and that removal levels in the 70 percent to 90 percent range could be achievable. This assumes the funding and successful implementation of an aggressive, comprehensive research and development program at both EPA and the U.S. Department of Energy (DOE). Such applications represent only the initiation of a potential national retrofit program, which would take a number of years to fully implement. Since release of the white paper, we have received numerous comments on technology and have additional test data. We are currently evaluating this new information.) [10] What assumptions for ACI availability are most appropriate? Specifically, what date of availability for ACI technology is appropriate to consider in a modeling analysis, at what quantities, for what coal types, and why?

e. EEI estimated that ACI would be less expensive per pound of Hg removed than EPA has estimated. In addition, Cinergy assumed higher capital costs for ACI than EPA in its modeled scenarios. Are EPA's Hg control technology cost assumptions reasonable? Although EPA has information on the costs of ACI, EPA is seeking additional detailed data addressing the validity of the costs assumed for ACI.

f. Analyses by commenters and EPA of Hg trading programs indicate that variations in the first phase cap level and timing impact when the final cap level will be achieved (*i.e.*, the emissions reduction ''glide path''). Although banking in the first phase impacts the timing of achieving the second phase cap, it should not affect the cumulative Hg emissions reductions ultimately achieved under the program. EPA is seeking additional comment on the impact banking may have on the timing of achieving the second phase cap.

g. EPA received comments estimating the co-benefits of Hg reductions associated with implementation of the proposed CAIR (*i.e.*, the level of Hg

[10] *See* OAR–2002–0056–0043 and –0463.

reductions realized as a result of compliance with the proposed CAIR). Cinergy estimates a co-benefit level in 2010 of 38 tons as compared to current emissions of 48 tons. EEI estimates a co-benefit level in 2010 of 40 tons. Both groups modeled a 34-ton first phase cap. In light of these modeling analyses, EPA is seeking additional comment on the reasonableness of its current IPM assumptions co-benefit reductions. Emission modification factors (EMF) are one component of the estimated Hg co-benefits from the proposed CAIR. A comparison of co-benefit assumptions used in EPA and other modeling is provided in Table 5. We are also seeking comment on appropriate EMF.

TABLE 5.—HG REMOVAL ASSUMPTIONS FOR POLLUTION CONTROL EQUIPMENT

Name for control	EPA 2003 EMFs			CRA 2004 EMFs EIA			EIA AEO2004 EMFs		
	Bit EMF	Subbit EMF	Lignite EMF	Bit EMF	Subbit EMF	Lignite EMF	Bit EMF	Subbit EMF	Lignite EMF
PC/CS–ESP	0.64	0.97	1.00	0.65	0.80	0.90	0.64	0.97	1.00
PC/CS–ESP/FGD	0.34	0.84	0.56	0.40	0.65	0.65	0.34	0.73	0.58
PC/CS–ESP/FGD–Dry	0.64	0.65	1.00	0.50	0.85	0.90	0.64	0.65	1.00
PC/CS–ESP/SCR/FGD	0.10	0.34	0.56	0.15	0.65	0.65	0.10	0.73	0.58
PC/FF	0.11	0.27	1.00	0.25	0.35	0.90	0.11	0.27	1.00
PC/FF/FGD	0.10	0.27	1.00	0.15	0.25	0.60	0.05	0.27	0.64
PC/FF/FGD–Dry	0.05	0.75	1.00	0.15	0.75	0.90	0.05	0.75	1.00
PC/FF/SCR/FGD	0.10	0.15	0.56	0.10	0.25	0.60	0.10	0.27	0.64
PC/HS–ESP	0.90	0.94	1.00	0.80	1.00	1.00	0.90	0.94	1.00
PC/HS–ESP/FGD	0.58	0.80	1.00	0.45	0.70	0.70	0.58	0.80	1.00
PC/HS–ESP/FGD–Dry	0.60	0.85	1.00	na	na	na	0.60	0.85	1.00
PC/HS–ESP/SCR/FGD	0.10	0.75	1.00	0.15	0.70	0.70	0.42	0.76	0.64

Notes: PC: pulverized coal; CS–ESP: cold-side electrostatic precipitator; HS–ESP: hot-side electrostatic precipitator; FGD: flue gas desulfurization; SCR: selective catalytic reduction; FF: fabric filter; EMF: emission modification factor (% reduction = 1—EMF) EPA 2003 EMFs used by CATF and CCAP analyses; Charles River Associates (CRA) EMFs used in EEI analysis; AEO2004 EMF used in Energy Information Administration (EIA) modeling.

h. More recent test data than were available at proposal on subbituminous-fired units equipped with SCR indicate that SCR does not enhance the oxidation of Hg^0 on such coals and, thus, does not provide for additional capture in a wet scrubber.[11] Based on these test data, EPA is considering revising the EMF for subbituminous coal-fired units equipped with SCR and wet FGD in modeling for the final rule. For the EMF identified in Table 5 for such units, EPA recommends the use of the EMF control combination before a SCR is added (*i.e.*, ascribe no additional control due to the addition of the SCR). Thus, EPA is considering making the following three changes to the subbituminous coal EMF used in IPM: for CS–ESP/SCR/FGD, use CS–ESP/FGD (0.84); for FF/SCR/FGD, use FF/FGD (0.27); and for HS–ESP/SCR/FGD, use HS–ESP/FGD (0.80). EPA is seeking comment on these proposed EMF changes.

In addition, EPA notes that other recent test data (*e.g.*, DOE- and EPRI-sponsored testing on Hg controls) may be available that would influence EMF used in EPA modeling. EPA is seeking comment on the appropriateness of using other test data for EMF development and requests that commenters submit any test data that may be relevant.

[11] *See* OAR–2002–0056–1268 and –1270.

C. Issues of Hg Speciation

This section addresses the issue of Hg speciation. As explained further below, we are seeking additional input on the species (or form) of Hg emitted in the flue gas, the percentage of each species emitted in the flue gas, and how those percentages in total (*i.e.*, the speciation profile) affect the analysis of how the power sector could respond to different levels of emissions control.

1. *Overview.* To quantify the relative contribution of Hg emissions from U.S. coal-fired power plants on total nationwide Hg deposition, the EPA initiated an Information Collection Request (ICR) in 1999 under the provisions of CAA section 114. During this data collection effort, incoming coal shipments for all coal-fired power plants in the U.S. were tested for Hg content (for calendar year 1999) and other selected coal properties (*e.g.*, ash, sulfur and chlorine content, *etc.*). Additionally, during 1999, 81 power plants—chosen to be representative of the entire U.S. power plant sector—were tested for stack emissions of Hg using the Ontario-Hydro sampling method. The Ontario-Hydro method provided EPA with speciated Hg emissions (*i.e.*, Hg^0, Hg^{+2}, and Hg_p) for these tested units. Data from these tests were then extrapolated to all domestic coal-fired power plants and used to generate a national total Hg emissions estimate for 1999 (48 tons per year). These data were further used to provide a national estimate of emissions of the three forms of Hg as follows: Hg^0—54 percent, Hg^{+2}—43 percent, and Hg_p—3 percent. Plant-specific estimates based on these data were used in the IPM modeling activities discussed elsewhere in this notice. In general, eastern bituminous coals emitted the least amount of Hg^0 (the species most difficult to control); followed by western subbituminous coals (*e.g.*, Powder River Basin (PRB), *etc.*); and the northern and southern lignite coals. To this end, the 1999 ICR data collection effort provided EPA one of the most comprehensive databases available to date regarding Hg emissions from coal-fired power plants.

In the proposed CAMR, EPA discussed the relevance and importance of characterizing the species of Hg emitted in the flue gas and solicited comment on that issue. EPA received significant public input as a result. As we and commenters have recognized, the form (or species) of Hg emitted in the flue gas affects the ability to control Hg emissions [12] and the form of Hg released from a stack affects the atmospheric fate and transport of Hg. The species of Hg, therefore, is relevant to assessing the costs associated with different levels of Hg emissions control.

2. *What specific comments on Hg speciation did EPA receive in response to the January 2004 proposal and the March 2004 supplemental proposal?* A number of comments were provided on

[12] 69 FR 4672, January 30, 2004.

the importance of speciated Hg emission information and potential atmospheric transformations during the public comment period. Among these are comments or attachments submitted by the following: EPRI (OAR–2002–0056–2578); Hubbard Brook Research Foundation (HBRF) (OAR–2002–0056–2038); Southern Company (OAR–2002–0056–2948); Subbituminous Energy Coalition (SEC) (OAR–2002–0056–2379); and Utility Air Regulatory Group (UARG) (OAR–2002–0056–2922 and –2928).

EPRI provided information (in Section A of their report) on plume-simulating chamber studies that indicate transformation of Hg species in the plume. This work was followed by studies to evaluate the speciation changes in actual power plant plumes.

HBRF (in Section 3 of their report) provided comment on the validity of using an average speciation profile for all coal-fired power plants. SEC raised questions about the speciation profile for units burning a mix of coals. Southern Company and UARG indicated that, because the Hg speciation dictates the level of control that may be achieved with existing control equipment, different Hg emission limits must be established for the different coal ranks.

3. *What are the areas of ongoing EPA research?* EPA is evaluating all of the comments on speciation that it received in response to the proposed CAMR. To further aid in our review of these comments, to supplement our existing 1999 ICR database, and to aid in our decision-making process, EPA is seeking additional comment on the following areas.

a. We have received numerous comments on subcategorization by coal type and the speciation profiles resulting from the combustion of various coal types. We are seeking additional specific data and information on the speciation profiles of various types and blends of fuels.

b. Commenters have questioned the appropriateness of using a standard (or average) speciation profile in modeling analyses conducted for all coal-fired power plants. The Agency is seeking comment on if/when a standard (or average) speciation profile should be used for either the CAA section 111 or CAA section 112 regulatory approach.

c. Is it currently feasible, or will it be feasible within the compliance timeframes of the proposed rule, to accurately monitor a source's Hg emissions by species?

III. EPA's Proposed Revised Benefits Assessment

A. What Is the Relevant Background?

Consistent with EO 12866, EPA included a benefits assessment in the proposed CAMR. EPA received comments on that assessment. Based on those comments and in furtherance of our obligations under EO 12866, we have preliminarily revised our proposed approach to analyzing the benefits associated with Hg emission reductions from power plants. We explain below our proposed revised benefits methodology. We also identify below comments received on the proposed CAMR that provide analyses or information relevant to our proposed revised benefits approach. We further identify those commenters that presented approaches that differ from our revised approach, as described below. We seek comment on our proposed revised benefits methodology and on the strengths and weaknesses of the analytical approaches presented in the comments to the extent they relate to our proposed revised benefits methodology.

Although this section of the NODA addresses the benefits analysis that we must prepare for purposes of EO 12866, we recognize that the costs and benefits of reducing emissions are often inter-related. Thus, to the extent that we receive any comments or other information in the process of completing the benefits assessment for purposes of EO 12866 and to the extent that such information bears on the statutory factors relevant to setting either a beyond-the-floor standard for Hg under CAA section 112(d) or a standard of performance for Hg under CAA section 111, we intend to evaluate and consider that information as we make a final decision as to which regulatory approach to pursue.

B. How Is EPA Estimating Reductions in Hg Exposure Associated With the CAMR?

EPA's proposed revised benefits analysis attempts to estimate the extent to which adverse human health effects will be reduced as a result of reducing Hg emissions from coal-fired power plants. Translating estimates of reductions in Hg emissions from coal-fired power plants to health outcomes in humans is a function of a number of complex chemical, physical, and biological processes, as well as a wide variety of human behaviors and responses.

The relevant events and processes include the following:

- The magnitude and nature of current and forecasted Hg emissions from coal-fired power plants, as well as the magnitude and species of current Hg emissions from other sources, both domestic and international.
- The physical transport of vapor and particle-phase Hg emissions in the air, as well as the chemical transformations that occur to Hg as it reacts with other chemical species in the atmosphere.
- The deposition of inorganic Hg onto terrestrial and aquatic surfaces, and the transport of Hg from terrestrial systems to surface water bodies.
- The biological, chemical, and physical processes that control the rate of methylmercury (MeHg) production in surface waters and aquatic sediments and the bioavailability of Hg to organisms.
- The composition and complexity of aquatic food webs and species-specific factors such as diet composition, chemical assimilation efficiencies, and metabolism that affect the bioaccumulation of MeHg in fish.
- The extent to which specific water bodies are used for a variety of fishing activities, either by individuals or commercially.
- Different human fish consumption behaviors, including for specific subpopulations.
- The human response to MeHg exposure.

EPA's proposed revised benefits methodology attempts to characterize, either directly or indirectly, each of the above events and processes. EPA specifically is seeking to estimate the reduction in exposure to MeHg associated with reducing Hg emissions from coal-fired power plants. We are seeking comment on our proposed revised benefits approach, as described below. As noted above, we are also seeking comment on the comments that we received that are relevant to our proposed revised benefits methodology.

The following sections describe each of the steps of our proposed revised benefits methodology. Those steps can be categorized broadly as follows:

- Quantify Hg emissions that are projected from U.S. coal-fired power plants under the Base Case and CAMR and then quantify Hg emissions that result from sources other than U.S. coal-fired power plants. The power sector modeling described above and in more detail at *http://www.epa.gov/airmarkets/epa-ipm/* will assist in the quantification of Hg from U.S. coal-fired power plants.
- Model the atmospheric dispersion, atmospheric speciation, and deposition of Hg.

• Model the link between changes in Hg deposition and changes in the MeHg concentration in fish.

• Assess the types and amounts of fish consumed by U.S. consumers and, from that, assess the resulting MeHg exposure.

• Assess how reductions in human exposure to MeHg affects human health.

C. Step 1 of EPA's Proposed Revised Benefits Methodology: Analyzing Hg Emissions From Other Sources

1. *Overview*. As stated in the proposed CAMR, Hg exposure is both a domestic and a global issue. From a domestic perspective, power plants are one source of Hg air emissions, but there are other domestic sources of man-made Hg. Mercury also enters the atmosphere from a variety of natural processes, including, for example, volcanic eruptions, groundwater seepage, and evaporation from the oceans.

EPA currently does not have an inventory of natural or re-emitted sources suitable for modeling purposes. EPA does, however, have inventories concerning man-made domestic and international sources of Hg. These inventories have been used over the past decade in air quality and air deposition modeling.[13] [14] They are important because the first step of EPA's proposed revised benefits methodology is to quantify Hg emissions that result from sources other than U.S. coal-fired power plants. In particular, the inventories enable us to establish upwind and downwind boundary conditions to apportion exposure to non-natural domestic and international sources of Hg emissions.

The inventory sets that EPA currently is considering using include an update/modification to the 1999 National Emissions Inventory (NEI) for all U.S. anthropogenic sources for criteria pollutants and for all U.S. anthropogenic non-power plant sources for Hg emissions, the 1995 Canadian criteria pollutant inventory for Canadian anthropogenic sources, and the 2000 Hg inventory for Canadian anthropogenic sources.[15] EPA is also planning on using GEOS-CHEM for modeling boundary conditions representing the global background.[16]

EPA is also aware of research conducted by EPA and others (*e.g.*, at Cheeka Peak, WA; Steubenville, OH; Mauna Loa, HI; Mt. Bachelor, OR; and Okinawa).[17] That research, for example, provides important information about Hg fate and transport and relative domestic and international source contributions. The research also provides speciated high altitude atmospheric measurements of Hg. These measurements may improve our understanding of the atmospheric reactions that alter the chemical species of Hg in the atmosphere and that ultimately impact fate and transport of emissions originating in Asian countries and other international sources. This research is, therefore, directly relevant to the first step of our preliminary proposed revised benefits methodology, as it affects our ability to estimate the U.S. power plant contribution to total Hg deposition within the U.S. EPA is seeking comment on this step of its proposed revised benefits methodology.

2. *What specific comments did EPA receive on Hg emissions from other sources in response to the January 2004 proposal and the March 2004 supplemental proposal*? EPA received a number of public comments that are relevant to the issue of assessing Hg emissions from sources other than U.S. coal-fired power plants, including comments from the Center for Energy and Economic Development (CEED) (OAR–2002–0056–2256); EPRI (OAR–2002–0056–2578); HBRF (OAR–2002–0056–2038); National Mining Association (OAR–2002–0056–2434); TXU Energy (OAR–2002–0056–1831); and UARG (OAR–2002–0056–2922). Some of these comments employed different approaches for simulating boundary conditions for apportioning Hg exposure from domestic and international sources, and we are interested in obtaining public input on these alternative approaches and analyses.

D. Step 2 of EPA's Proposed Revised Benefits Methodology: Analyzing Air Dispersion Modeling Capabilities

1. *Overview*. The second step of our proposed revised benefits methodology requires modeling the atmospheric dispersion, atmospheric speciation, and deposition of Hg. This is a critical step in our analysis because to evaluate the benefits of reducing Hg emissions from coal-fired power plants, we need to understand how Hg moves through the atmosphere and how it is ultimately deposited.

Over the past decade, EPA has used a variety of analytical and numerical simulation tools to project the atmospheric transport, chemistry, and deposition of both criteria (*e.g.*, ozone, fine particles, etc.) and toxic (*e.g.*, Hg) air pollutants. These models range in complexity from simple, one-layer Gaussian dispersion models (*e.g.*, Industrial Source Complex (ISC3) model [18]) to more complex, multi-layer Lagrangian puff-type trajectory models (*e.g.*, Hybrid Single Particle Lagrangian Integrated Trajectory (HYSPLIT) model[19]), and finally to complex three-dimensional (3–D) Eulerian grid models (*e.g.*, Community Multiscale Air Quality (CMAQ) model [20] [21] [22]

EPA and others have been using a suite of complex numerical models to assess the transport and fate of Hg emissions in the local, regional, and global atmosphere. In the Utility Report to Congress, EPA relied heavily on the ISC3 dispersion model to assess near-field Hg deposition effects.[23] The HYSPLIT model has also been used extensively in the Great Lakes and Chesapeake Bay watersheds to analyze source-receptor relationships for Hg deposition in these areas.[24] The

[13] Pacyna, J.M., E.G. Pacyna, F. Steenhuisen, S. Wilson. 2003. Mapping 1995 Global Anthropogenic Emissions of Mercury. Atmosph. Env., 37, p. 109–117.

[14] Seigneur, C., K. Vijayaraghavan, K. Loman, P. Karamchandani, C. Scott. 2004. Global Source Attribution for Mercury Deposition in the United States. Environ. Sci. Technol., 38, p. 555–569.

[15] The update of the 1999 NEI (1) updates emissions of criteria pollutants to 2001, (2) removes fugitive dust sources of Hg in the few States where the original 1999 NEI includes them, and (3) replaces the 1999 NEI estimates of 1999 Hg emissions from medical waste incinerators with more recent data on 2002 emissions. The original 1999 NEI is posted at *http://www.epa.gov/ttn/chief/net/1999inventory.html*. The 2001 criteria pollutant inventory for U.S. sources is available in EPA Docket ID No. OAR–2003–0053, and is the same as made available in the Notice of Data Availability for the Clean Air Interstate Rule (69 FR 47828, August 6, 2004). The updated/modified 1999 U.S. Hg inventory and the Canadian inventory for all pollutants are posted at *http://www.epa.gov/ttn/chief/emch/invent/index.html*.

[16] *See http://www-as.harvard.edu/chemistry/trop/geos/*.

[17] *See http://oaspub.epa.gov/eims/eimsapi.dispdetail?deid=56181*.

[18] *See http://www.epa.gov/scram001/tt22.htm#isc; http://www.epa.gov/scram001/userg/regmod/isc3v2.pdf; and http://www.epa.gov/scram001/7thconf/iscprime/useguide.pdf*.

[19] *See http://www.arl.noaa.gov/ready/hysplit4.html*.

[20] Amar, P., R. Bornstein, H. Feldman, H. Jeffries, D. Steyn, R. Yamartino, Y. Zhang. 2004. Review of CMAQ Model, December 17–18, 2003. *See http://hill.nccr.epa.gov/air/interstateairquality/pdfs/PeerReview_of_CMAQ.pdf*.

[21] Community Multiscale Air Quality (CMAQ) Model Documentation. *See http://hill.nccr.epa.gov/air/interstateairquality/pdfs/CMAQ_Documentation.pdf*.

[22] Byun, D.W., N. Moon, D. Jacob, R. Park. Linking CMAQ with GEOS–CHEM. *See http://hill.nccr.epa.gov/air/interstateairquality/pdfs/GEOSCHEMforCMAQ_Description.pdf*.

[23] U.S. EPA. February 1998. op. cit. pp. ES–16, ES–20, and 7–28.

[24] Cohen, M., R. Artz, R. Draxler, P. Miller, L. Poissant, D. Niemi, D. Ratte, M. Deslauriers, R. Duval, R. Laurin, J. Slotnick, J. Neetesheim, J. McDonald. 2004. Modeling the Atmospheric

Continued

Regional Modeling System for Aerosols and Deposition (REMSAD),[25] a 3–D Eulerian grid model, has been used in recent years for several State-based total maximum daily load (TMDL) assessments for Hg deposition to local watersheds.[26] In addition, REMSAD was used to assess the depositional changes associated with the implementation of the Clear Skies Act of 2003.[27]

More recently, EPA and EPRI have applied 3-D Eulerian modeling platforms to assess both domestic and global Hg deposition, respectively. EPA has been evaluating the atmospheric transport, transformation, and deposition of Hg using the CMAQ model over four 1-month periods (two in 1995 and two in 2001) and over the entire year of 2001.[28] CMAQ uses a ''one-atmosphere'' approach and addresses the complex physical and chemical interactions known to occur among multiple pollutants in the free atmosphere. The spatial resolution (*i.e.*, the ability to observe concentration or depositional gradients/differences) of the gridded output information from CMAQ is generally considered to be either 36 kilometers (km), 12 km, or 4 km; however, to date, CMAQ results have only been developed for Hg modeling at the 36 km resolution. In simulating the transport, transformation, and deposition of pollutants, CMAQ resolves 14 vertical layers in the atmosphere, and employs finer-scale resolution near the surface to simulate deposition to both terrestrial and aquatic ecosystems. CMAQ transport is defined using a higher-order meteorological model, commonly the Fifth-Generation Pennsylvania State University/National Center for Atmospheric Research mesoscale model (MMM5) [29] (current modeling analyses are planning to use calendar year 2001 meteorological data).

Currently, EPA is planning to use REMSAD and CMAQ for modeling the atmospheric dispersion, speciation, and deposition of Hg. EPA is specifically planning to use CMAQ version 4.4 with Hg with a horizontal resolution of 36 km and 14 vertical layers and REMSAD version 7.13 also with a horizontal resolution of 36 km and 14 vertical layers. As described above, EPA is planning to use the GEOS–CHEM global model for boundary conditions input to both REMSAD and CMAQ. EPA is seeking comment on its proposed use of REMSAD and CMAQ to evaluate how Hg moves through the atmosphere and how it will ultimately be deposited.

An important aspect of the second step of our proposed revised benefits methodology is the evaluation of the REMSAD and CMAQ modeling. In evaluating modeling, we seek to compare the simulated results with ambient monitoring information to assess the quality of the modeled simulations. The Mercury Deposition Network (MDN) provides the only source of routinely available empirical domestic Hg deposition information. MDN is a collaborative network involving several organizations (*e.g.*, United States Geological Survey (USGS), National Oceanic and Atmospheric Administration, EPA) and is part of the National Atmospheric Deposition Program (NADP) network of sites across the U.S.[30] As of spring 2003, the MDN contained approximately 90 sites across the U.S. and Canada, which provide measurements of wet deposition of total Hg, integrated over weekly intervals.

We recognize the need to complement the MDN wet deposition measurements with dry deposition measurements because it is not clear how significant dry Hg deposition is to total ecosystem deposition. Currently, there is no recognized field method for measuring dry deposition. State-of-the-art atmospheric models indicate that the rate of dry deposition of Hg can be of a similar order of magnitude as wet deposition. Although the current extent of the MDN is relatively limited—as compared to the extensive networks for ozone and fine particles—EPA believes that the MDN data are the best available to evaluate the predictive capabilities of regional- and national-scale models. The MDN was not developed to monitor deposition near large sources and is of limited use for evaluating near-field deposition from models. We are seeking comment on how to use the MDN or related information in evaluating the numerical modeling analyses discussed above.

2. *What specific comments did EPA receive on air dispersion modeling capabilities in response to the January 2004 proposal and the March 2004 supplemental proposal?* We received a number of public comments on the use of analytical and numerical models for assessing the impacts of the proposed regulatory programs on Hg deposition patterns. Among these are comments or attachments submitted by the following: CEED (OAR–2002–0056–2256); CATF, NRDC, *et al.* (OAR–2002–0056–3460); EPRI (OAR–2002–0056–2578); and UARG (OAR–2002–0056–2922). Some of these commenters suggested alternative approaches to assessing the atmospheric transport and deposition of Hg, and we seek comment on those approaches.

E. Step 3 of EPA's Proposed Revised Benefits Methodology: Modeling Ecosystem Dynamics

1. *Overview.* In the above steps of our proposed revised benefits methodology, we seek to quantify changes in Hg deposition associated with Hg reductions from U.S. coal-fired power plants. The third step involves modeling affected ecosystems. As we explained in the proposed CAMR, the main route of human exposure to MeHg is through consumption of fish containing elevated levels of MeHg. Accordingly, to estimate the changes in human exposure to MeHg that may result from reductions in Hg emissions from U.S. coal-fired power plants, we must first quantify how changes in Hg deposition from U.S. coal-fired power plants (forecasted using the models described above) translate into changes in MeHg concentrations in fish. Quantifying the linkage between different levels of Hg deposition and fish tissue MeHg concentration is the third step of our proposed revised benefits methodology.

To effectively estimate fish MeHg concentrations in a given ecosystem, it is important to understand that the behavior of Hg in aquatic ecosystems is a complex function of the chemistry, biology, and physical dynamics of different ecosystems. The majority (95 to 97 percent) of the Hg that enters lakes, rivers, and estuaries from direct atmospheric deposition is in the inorganic form.[31] Microbes convert a small fraction of the pool of inorganic Hg in the water and sediments of these ecosystems into the organic form of Hg (MeHg). MeHg both bioconcentrates and biomagnifies. In the environment this process is referred to as bioaccumulation. MeHg is the only form of Hg that biomagnifies in organisms.[32]

Transport and Deposition of Mercury to the Great Lakes. Environ. Res., 95, p. 247–265.

[25] *See http://remsad.saintl.com/.*

[26] ICF Consulting. August 5, 2004. EPA Region 6—REMSAD Air Deposition Modeling in Support of TMDL Development for Southern Louisiana. Final Report. Prepared for EPA Region 6.

[27] *See http://epa.gov/clearskies/air_quality_tech.html.*

[28] Bullock, O., K. Brehme. 2002. Atmospheric Mercury Simulation Using the CMAQ Model: Formulation Description and Analysis of Wet Deposition Results. Atmosph. Environ., 36, p. 2135–2146.

[29] *See http://www.mmm.ucar.edu/mm5/mm5-home.html.*

[30] *See http://nadp.sws.uiuc.edu/mdn/.*

[31] Lin, C-J., S.O. Pehkonen. 1999. The Chemistry of Atmospheric Mercury: A Review. Atmospheric Environment, 33, p. 2067–2079.

[32] Bloom, N.S. 1992. On the chemical form of mercury in edible fish and marine invertebrate tissue. Canadian Journal of Fisheries and Aquatic Sciences, 49, p. 1010–1017.

Ecosystem-specific factors that affect both the bioavailability of inorganic Hg to methylating microbes (*e.g.*, sulfide, dissolved organic carbon)[33 34] and the activity of the microbes themselves (*e.g.*, temperature, organic carbon, redox status)[35] determine the rate of MeHg production and subsequent accumulation in fish. The extent of MeHg bioaccumulation is also affected by the number of trophic levels in the food web (*e.g.*, piscivorus fish populations) because MeHg biomagnifies as large piscivorus fish eat smaller organisms. These and other factors can result in considerable variability in fish MeHg levels among ecosystems at the regional and local scale.

To analyze the link between Hg deposition and MeHg concentrations in fish in aquatic ecosystems across the U.S., EPA currently is considering using EPA's Office of Water's Mercury Maps (MMaps).[36] MMaps, which has been peer reviewed by EPA scientists and is currently undergoing external peer review, provides a quantitative spatial link between air deposition of Hg and MeHg in fish tissue. The external peer review materials will be placed in the docket as soon as they are available. The MMaps model suggests that changes in steady-state concentrations of MeHg in fish will be proportional to changes in Hg inputs from atmospheric deposition if air deposition is the only significant source of Hg to a water body; and if the physical, chemical, and biological characteristics of the ecosystem remain constant over time. This model is best applied to ecosystems where atmospheric deposition is the principal source of Hg to a water body and assumes that the physical, chemical, and biological characteristics of the ecosystem remain constant over time. EPA recognizes that concentrations of MeHg in fish are not expected to be at steady state. We also recognize that the requirement that all other conditions remain constant over time inherent in the MMaps methodology is not likely to be met. We further recognize that many water bodies, particularly in areas of historic gold and Hg mining in western States, contain significant nonair sources of Hg. Finally, we recognize that MMaps does not provide for a calculation of the time lag between a reduction in Hg deposition and a reduction in the MeHg concentrations in fish.

Despite these limitations of this model, EPA is unaware of any other tool for performing a national-scale assessment of the change in fish MeHg concentrations resulting from reductions in atmospheric deposition of Hg. As with all other aspects of our proposed revised benefits methodology, we seek comment on the use of the steady-state linear relationship between air deposition and MeHg concentrations in fish (*i.e.*, MMaps) and how the results of the application of this relationship should be interpreted to account for the inherent limitations described above.

To supplement the MMaps methodology, EPA is currently pursuing a number of case studies examining Hg deposition and bioaccumulation of MeHg in fish tissue. Dynamic ecosystem scale models are being used to estimate ecosystem response times following reductions in atmospheric Hg emissions, and to explore the uncertainty around the proportional relationship used by the MMaps model. In this project, EPA is considering modeling eight case studies spanning a range of ecosystem types and characteristics in the Eastern and Midwestern U.S. Dynamic watershed, water body, and aquatic bioaccumulation models will be linked and applied to selected ecosystems, and sensitivity analyses will be run to provide a context for estimating the range in the magnitude and timing of changes in fish MeHg concentrations in response to declines in Hg deposition that expected as the result of regulation of power plants. More information on the models EPA is considering using in the case studies (WASP, GBMM, SERAFM, EFDC, WhAEM2000, BASS, E–MCM) can be found on the Council for Regulatory Environmental Modeling (CREM) Models Knowledge Base (*www.epa.gov/crem*) and the Web site for the Ecosystem Research Division of the Office of Research and Development (ORD) (*http://www.epa.gov/athens/*).

In pursuing these case studies, EPA is seeking information on the strengths and weaknesses of different approaches for modeling the anticipated response of fish tissue MeHg concentrations to declines in deposition for a national-scale benefits methodology. The case studies will help determine the potential magnitude of response of the MeHg concentration in fish in marine and freshwater systems if atmospheric deposition from power plants are reduced, and what the expected time lag will be before a response is observed in fish. To complement these case studies, EPA is interested in both empirical information collected from ecosystems across the U.S. or modeled scenarios that show the temporal dynamics of Hg in different ecosystems.

The case studies will also help determine the effects of ecosystem properties other than total Hg loading on accumulation in organisms and suggestions for how such information should be incorporated into the exposure analysis. To complement these case studies, EPA is interested in both empirical information collected from ecosystems across the U.S. or modeled scenarios that show the effects of ecosystem properties other than total Hg loading on accumulation in organisms in different ecosystems and, specifically, on new knowledge related to factors affecting methylation and demethylation in a range of aquatic ecosystem types.

Using the best-available scientific understanding of key processes, these case studies will provide estimates of average rates and a distribution of Hg methylation rates and MeHg bioaccumulation factors (BAF) in different aquatic systems (freshwater and marine) across the U.S. for use in modeling. EPA seeks comment on data and/or analytical tools that can be used to forecast methylation rates and bioaccumulation rates in aquatic ecosystems.

These case studies should provide detailed information on time lag, important ecosystem properties other than deposition rates, Hg methylation rates, and Hg BAF that can be used to inform how the results of a national-scale MMaps application should be interpreted. We are seeking information on the strengths and weaknesses of applying MMaps to modeling the anticipated response of fish tissue MeHg concentrations to declines in Hg deposition for a national-scale benefits methodology. Additionally, EPA intends to document these case studies in the electronic docket for the CAMR and to make this information available to the public on the ORD's website as soon as possible.

There are two final issues on which we are seeking comment that are relevant to the third step in our proposed revised benefits methodology. First, MMaps is designed to simulate natural freshwater systems. We currently do not have an appropriate

[33] Benoit, J., C.C. Gilmour, R.P. Mason, A. Heyes. 1999. Sulfide controls mercury speciation and bioavailability to methylating bacteria in sediment pore waters. Environ. Sci. Tech., 33(6), p. 951–957.

[34] Benoit, J.M., R.P. Mason, C.C. Gilmour, G.R. Aiken. 2001. Constants for mercury binding by dissolved organic matter isolates in the Florida Everglades. Goechim. Cosmochim. Acta, 65, p. 4445–4451.

[35] Hammerschmidt, C.R. and W.F. Fitzgerald. 2004. Geochemical controls on the production and distribution of mercury in near-shore marine sediments. Environ. Sci. Tech., 38(5), p. 1480–1486.

[36] Description of EPA's Mercury Maps model—*http://www.epa.gov/waterscience/maps/* and September 2001 Mercury Maps Peer Reviewed Final Report—*http://www.epa.gov/waterscience/maps/report.pdf.*

method for assessing how a change in the deposition of Hg relates to a change in the concentration of MeHg in fish tissue in fish found in marine environments and/or farm-raised species. We recognize, however, that marine and farm-raised species comprise a large proportion of the fish consumed by the U.S. population and, likely account for a significant fraction of the overall exposure. We are aware that EPRI has submitted an analysis that assumes the changes in Hg deposition resulting from regulation of emissions from coal-fired power plants will have an effect on MeHg concentrations in estuarine and marine species (salt-water species) proportional to the reduction in global emissions.[37] We are evaluating EPRI's proposed approach, but are also seeking comment on other potential approaches for analyzing effects in salt-water marine fish populations.

Second, as noted above, MMaps does not account for the time lag that exists between reducing Hg deposition and reducing MeHg concentrations in fish. MMaps instead assumes that a change in Hg deposition immediately translates into a change in MeHg fish tissue concentration. We are evaluating other tools that will enable us to assess this time lag issue. In particular, we are aware of the Mercury Experiment To Assess Atmospheric Loading In Canada and the U.S. (METAALICUS) study, which was cited in a number of comments received by EPA on the proposed CAMR. In METAALICUS, newly deposited Hg appeared to be more available to bacteria to convert to MeHg than Hg that was in the system for longer periods of time (*i.e.*, historically deposited Hg).[38] These results suggest that lakes receiving the bulk of their Hg directly from deposition to the lake surface would see fish MeHg concentrations respond more rapidly to changes in atmospheric Hg deposition than lakes receiving most of their Hg from terrestrial runoff. These data also imply that systems with a greater surface-area-to-watershed-area ratio that receive most of their inputs directly from the atmosphere may respond more rapidly to changes in emissions and deposition of Hg than those receiving significant inputs of Hg from the catchment area. We emphasize that the METAALICUS experiment is ongoing, and conclusions are still being refined. We do not know whether the METAALICUS results, or ones similar, would be found in different ecosystems. We are especially interested in information that can be used to extend or extrapolate the results of the METAALICUS experiment to other freshwater systems, and information on Hg cycling and bioavailability in coastal and marine ecosystems.

2. *What specific comments did EPA receive on modeling ecosystem dynamics in response to the January 2004 proposal and the March 2004 supplemental proposal?* EPA received several comments addressing existing MeHg accumulation in fish and anticipated MeHg fish concentrations associated with reductions in Hg emissions from coal-fired power plants. Several groups submitted independent analyses of the changes in fish MeHg concentrations expected as the result of changes in Hg deposition. Among these are comments or attachments submitted by the following: Bad River Band of Lake Superior Tribe of Chippewa Indians (OAR–2002–0056–2118); Environmental Defense (OAR–2002–0056–2878); EPRI (OAR–2002–0056–2578, –2589, and –2593); HBRF (OAR–2002–0056–2038); Northeast States for Coordinated Air Use Management (NESCAUM) (OAR–2002–0056–2887 and –2890); and TXU Energy (OAR–2002–0056–1831). We are seeking comment on the analyses provided by the commenters.

F. Step 4 of EPA's Proposed Revised Benefits Methodology: Fish Consumption and Human Exposure

1. *Overview.* Step 4 in EPA's proposed revised benefits methodology addresses the relationship between reductions in MeHg concentrations in fish tissue and reductions in human exposure to MeHg. Fish obtained through commercial sources or noncommercial fishing activities come from both saltwater environments (including estuaries, bays, and the open ocean), and freshwater rivers, streams, lakes, and ponds.

Consumption of fish is the primary pathway for human exposure to MeHg. The fourth step in our methodology requires both an assessment of MeHg concentrations in freshwater and saltwater fish and an assessment of human consumption patterns of such fish. In this regard, we have been evaluating several databases for estimating MeHg concentrations in fish and consumption rates of such fish.

EPA's ongoing freshwater fish study, among other things, incorporates information from EPA's National Listing of Fish Advisories (NLFA), which contains approximately 80,000 samples of MeHg in fish tissue from both freshwater and saltwater species.[39] These data are voluntarily submitted by State agencies to the EPA and provide extensive coverage for the Eastern half of the U.S. Although the method of collection can vary by State, the NLFA data generally represent a combination of data collected from areas of increased angling activity and areas of suspected contamination. To the extent that the NLFA data are concentrated in areas of suspected contamination, the MeHg concentrations in fish based on these data may be biased and overestimate exposure to anglers and their families. The potential existence of this bias reflects the varying data collection methodologies that are selected by each State.

To supplement the NLFA data, EPA is considering using the recently completed 4-year field study, entitled the National Study of Chemical Residues in Lake Fish Tissue, which is also referred to as the National Fish Tissue Study (NFTS). The database contains about 1,000 samples of freshwater fish from 500 different lakes across the U.S.[40] The NFTS is a 4-year national screening-level freshwater fish contamination study. It is also the first national fish tissue survey to be based on a statistical (random) sampling design, and it will generate data on the largest set of persistent bioaccumulative and toxic chemicals ever studied in fish. The statistical design of the study allows EPA to develop national estimates of the mean concentrations of 268 chemicals in fish tissue from lakes and reservoirs of the lower 48 States. EPA will conduct a quality assurance analysis on the data for each year of the study. Additional information concerning NFTS is available at *http://www.epa.gov/waterscience/fishstudy/*.

For saltwater fish, there are fewer samples of fish tissue MeHg data, relative to freshwater information. EPA is considering the use of the Mercury in Marine Life database (available through the NLFA) that provides data on the level of Hg contamination in the estuaries and marine environments nationwide, and the U.S. Food and Drug Administration's (FDA) database of MeHg concentrations in fish.[41]

---

[37] *See* OAR–2002–0056–2578, –2589, and –2593.

[38] H. Hintelmann, R. Harris, A. Heyes, J.P. Hurley, C.A. Kelly, D.P. Krabbenhoft, S. Lindberg, J.W.M. Rudd, K.J. Scott, V.S. St. Louis. 2002. Reactivity and mobility of new and old mercury deposition in a boreal forest ecosystem during the first year of the METAALICUS study. Environ. Sci. Tech., 36, p. 5034–5040.

[39] U.S. EPA. August 2004. 2003 National Listing of Fish Advisories. Office of Water. EPA–823–F–04–016. Additional information available at *http://map1.epa.gov/*.

[40] U.S. EPA. November 2001. National Fish Tissue Study. EPA–823–F–01–028. *See http://www.epa.gov/waterscience/fishstudy/*.

[41] U.S. Food and Drug Administration. Mercury in Fish: FDA Monitoring Program (1990–2003). *See http://www.cfsan.fda.gov/frf/seamehg2.html*.

With the above information on MeHg concentrations in fish tissue in fresh- and salt-water fish, the next question is how do we compute exposures to affected populations? We recognize that our analysis must be based on MeHg estimates for fish that are typically consumed by the U.S. population. The NLFA contains samples that vary by size (*i.e.*, several are taken from fish that are potentially consumable based on size, while other samples are taken from smaller fish that are not likely to be consumed) and by species. To estimate the MeHg content in fish species that are typically consumed, EPA is evaluating the application of the NLFA and NFTS data to a statistical model developed by Dr. Stephen Wente, USGS, the National Descriptive Model of Mercury and Fish Tissue (NDMMFT).[42] The model uses statistical procedures to estimate a relationship between fish size and MeHg concentrations, while controlling for fish species, sampling method, location, and other factors. EPA intends to conduct a peer review of the application of this model to the NLFA and NFTS data and will place the appropriate materials in the docket when available.

We are also collecting information on fish consumption rates by different affected populations, particularly in the eastern half of the U.S. We recognize that many Americans consume seafood or freshwater fish; however, some subpopulations in the U.S. (*e.g.*, Native Americans, Southeast Asian Americans, and lower income subsistence fishers) may rely on fish as a primary source of nutrition and/or for cultural practices. Therefore, they may consume larger amounts and different parts of fish than the general population and may potentially be at a greater risk to the adverse health effects from MeHg due to increased consumption/exposure. We intend to use the following consumption data to complete our analysis concerning the relationship between reductions in MeHg concentrations in fish tissue and reductions of human exposure to MeHg.

a. *Women of childbearing age*—the National Health and Nutrition Examination Survey (NHANES) provides information based on the women who participated in the study.[43]

b. *Children*—Exposure Factors Handbook and NHANES provide information.

c. Subsistence fishers and ''high-end'' consumers (including, but not limited to Native Americans and Asian Americans)—The Exposure Factors Handbook provides information for subsistence Native American fishers; Journal articles (Peterson, *et al.*, 1994;[44] Hutchinson, *et al.*, 1994[45]) provide data for specific subpopulations such as specific Native American tribes and the Asian American population (*i.e.*, Hmong) located in the Eastern half of the U.S. Peterson, *et al.* (1994) assesses the fishing activity of the Chippewa in Minnesota and Wisconsin. Hutchinson, *et al.* (1994) assesses the fishing activities of the Hmong living in Minnesota, Wisconsin, and Michigan. Other studies exist for these populations, but they do not address consumption behavior in the Eastern half of the U.S. EPA is interested in additional information for subsistence anglers (freshwater and/or saltwater), and for Native Americans or Southeast Asian Americans living in the Eastern half of the U.S.

Finally, EPA notes that the Methyl mercury Water Quality Criterion, which establishes a MeHg fish concentration designed to be protective of human health, estimates fish consumption rates. EPA is seeking comment on whether the MeHg fish concentration set forth in the Water Quality Criterion or the fish consumption rates used in the Water Quality Criterion could be used for local, regional, or national assessments.[46]

2. *What specific comments did EPA receive on fish consumption patterns in response to the January 2004 proposal and the March 2004 supplemental proposal?* Several commenters identified existing fish consumption data, including: CATF, NRDC, *et al.* (OAR–2002–0056–3460); EEI (OAR–2002–0056–2929); EPRI (OAR–2002–0056–2578); Forest County Potawatomi Community (OAR–2002–0056–2173); Minnesota Conservation Federation, *et al.* (OAR–2002–0056–2415); and Southern Environmental Law Center (OAR–2002–0056–4222). We are seeking comment on the usefulness of the data provided by the commenters.

G. Step 5 of EPA's Proposed Revised Benefits Methodology: How Will Reductions in Population-Level Exposure Improve Public Health?

A variety of human health effects are associated with MeHg exposure. Published MeHg research suggests there may be neurological effects during fetal and child development, including intelligence quotient (IQ) decrements and more subtle effects on the ability to learn.[47] Numerous studies suggest that fish consumption has a beneficial cardiovascular effect in adult males as a result of its n-3 fatty acids (*e.g.*, Omega-3 fatty acids, *etc.*). However, research also raises the possibility that MeHg in fish can reduce the cardioprotective effects of fish consumption in adult males.[48 49 50]

The state-of-the-science regarding neurodevelopmental effects in children has been more thoroughly evaluated and reviewed than that for other health effects. A review by the National Academy of Sciences (NAS), published in July 2000, concluded that neurodevelopmental effects are the most sensitive and well-documented effects of MeHg exposure. EPA subsequently established a reference dose (RfD)[51] of 0.0001 milligrams per kilogram of body weight per day (mg/kg/day) derived from a neurodevelopmental endpoint based on the NAS review. NAS determined that EPA's RfD ''is a scientifically justified level for the protection of public health.''[52]

The RfD was based on three epidemiological studies of prenatal MeHg exposure in the Faroe Islands, New Zealand, and Seychelles Islands. These studies examined neurodevelopmental outcomes through the administration of numerous tests of

[42] *See http://water.usgs.gov/pubs/sir/2004/5199/.*

[43] Center for Disease Control. National Health and Nutrition Examination Survey. National Center for Health Statistics. *See http://www.cdc.gov/nchs/nhanes.htm* and *http://www.cdc.gov/mmwr/preview/mmwrhtml/mm5343a5.htm.*

[44] Peterson, D.E., M.S. Kanarek, M.A. Kuykendall, J.M. Diedrich, H.A. Anderson, P.L. Remington, and T.B. Sheffy. 1994. ''Fish Consumption Patterns and Blood Mercury Levels in Wisconsin Chippewa Indians.'' *Environmental Health* 49(1):53–58.

[45] Hutchinson, R., and C.E. Kraft. 1994. ''Hmong Fishing Activity and Fish Consumption.'' *Journal of Great Lakes Research* 20(2):471–487.

[46] 66 FR 1345, January 8, 2001.

[47] National Academy of Sciences. July 2000. Toxicological Effects of Methylmercury. National Academy of Sciences/National Research Council; National Academy Press.

[48] Yoshizawa, *et al.* 2002. ''Mercury and the Risk of Coronary Heart Disease in Men.'' New England Journal of Medicine; Nov. 2002; 347(22): 1755–60.

[49] Guillar, *et al.* 2002. ''Mercury, Fish Oils, and the Risk of Myocardial Infarction.'' New England Journal of Medicine; Nov. 2002; 347(22): 1747–54.

[50] Salonen, *et al.* 1995. ''Intake of Mercury from Fish, Lipid Peroxidation, and the Risk of Myocardial Infarction and Coronary Cardiovascular, and Any Death in Eastern Finnish Men.'' American Heart Association, 1995.

[51] ''In general, the RfD is an estimate (with uncertainty spanning perhaps an order of magnitude) of a daily exposure to the human population (including sensitive subgroups) that is likely to be without an appreciable risk of deleterious effects during a lifetime.'' *See http://www.epa.gov/iris/subst/0073.htm.*

[52] National Academy of Sciences. July 2000. op. cit.

cognitive functioning.[53 54 55] These tests provided partial or full assessments of IQ, problem solving, social and adaptive behavior, language functions, motor skills, attention, memory, and other functions. NAS found that all three studies are ''well-designed, prospective, longitudinal studies.'' [56]

EPA is considering using these three studies to conduct a benefits assessment. Specifically, EPA is considering focusing on IQ decrements associated with prenatal MeHg exposure as the initial endpoint for quantification and valuation of health benefits of reduced exposure to MeHg. This initial focus in IQ as the neurodevelopmental endpoint for quantification was supported by participants in a Hg neurotoxicity workshop held by EPA in November 2002.[57] Reasons for focusing on IQ include the availability of thoroughly-reviewed, epidemiological studies assessing IQ and/or related cognitive outcomes suitable for IQ estimation; and the availability of well-established methods and data for the economic valuation of avoided IQ deficits. EPA recognizes that, although IQ is a good metric of the cognitive impacts of prenatal MeHg exposure, IQ is not a comprehensive measure of the neurodevelopmental effects of MeHg exposure.

To potentially support a benefits estimation, EPA is working with researchers from Harvard University to analyze whether data from the Faroe Islands, New Zealand, and Seychelles Islands studies on the relationship between prenatal MeHg exposure and neurodevelopmental outcomes can be integrated. The study is intended to estimate the relationship between the exposure to MeHg and decrements in full-scale IQ, based on all three studies. The Harvard study will likely assume a linear dose-response relationship. The Faroe Islands and Seychelles Islands studies did not conduct the complete battery of tests used to estimate full-scale IQ. Therefore, the study is designed to use the results from the tests administered to predict full-scale IQ. This analysis will be peer-reviewed and placed in the docket as soon as it is available.

EPA is considering using a K-model to fit population-level dose-response relationships to the pooled data from the three studies. EPA is also considering, for the purposes of a national-level benefits assessment, to set K = 1, which assumes a linear relationship between exposure and effects.

The practicality of using a linear (K = 1) model is the primary reason that the Agency is considering use of such a model. A linear model would allow us to estimate the benefits of reductions in exposure due to power plants without a complete assessment of the other sources of exposure. Other models would require information on the joint distribution of exposure from power plants and other sources to estimate the benefits of reducing the exposure due to power plants, which would require much more precise information about consumption patterns than a K-model would require.

EPA is seeking comment on all aspects of the methodology for estimating the relationship between reductions in MeHg exposure and improvements in health. In particular, we are seeking comment on the following:

a. The focus on neurodevelopmental health of children.

b. The selection of IQ as an endpoint for quantification of neurodevelopmental effects and whether it is an appropriate endpoint for benefits analysis for reduced exposure to MeHg.

c. Whether other neurodevelopmental effects can be quantified and are amenable to economic valuation.

d. Whether, and if so how, data from the Faroe Islands, New Zealand, and Seychelles Islands studies can be integrated for the purposes of a benefits assessment.

e. The choice of the K = 1 model for the estimating the relationship between exposure and IQ and practical alternatives to that approach.

f. The appropriateness and consistency of using a linear dose-response model given the RfD established by EPA in 2001 (reflecting the NAS review in 2000), which assumes a threshold dose below which there is not likely to be an appreciable risk of deleterious effects during a lifetime.

[53] Myers, *et al.* 2003. ''Prenatal Methylmercury Exposure from Ocean Fish Consumption in the Seychelles Child Development Study.'' The Lancet. Vol. 361; May, 2003.

[54] Crump, *et al.* 1998. ''Influence of Prenatal Mercury Exposure Upon Scholastic and Psychological Test Performance: Benchmark Analysis of a New Zealand Cohort.'' Risk Analysis, 18(6): 701–713.

[55] Grandjean. 1997. Cognitive Deficit in 7-Year-Old Children with Prenatal Exposure to Methylmercury. Neurotoxicology, 19(6): 417–428.

[56] National Academy of Sciences. July 2000. op. cit. at 267.

[57] *See http://www.epa.gov/ttn/ecas/regdata/Benefits/mercuryworkshop.pdf.*

List of Subjects

40 CFR Part 60

Environmental protection, Administrative practice and procedure, Air pollution control.

40 CFR Part 72 and 75

Environmental protection, Air pollution control, Electric utilities.

Dated: November 29, 2004.

Stephen D. Page,

Director, Office of Air Quality Planning and Standards.

[FR Doc. 04–26579 Filed 11–30–04; 8:45 am]

BILLING CODE 6560–50–P

DEPARTMENT OF THE INTERIOR

Fish and Wildlife Service

50 CFR Part 17

RIN 1018–AJ10

Endangered and Threatened Wildlife and Plants; Notice of Availability of the Draft Economic Analysis on the Proposed Designation of Critical Habitat for *Allium munzii* (Munz's onion)

AGENCY: Fish and Wildlife Service, Interior.

ACTION: Proposed rule; notice of availability of draft economic analysis and reopening of public comment period.

SUMMARY: We, the U.S. Fish and Wildlife Service (Service), announce the availability of a draft economic analysis on the proposed designation of critical habitat for the federally endangered *Allium munzii* (Munz's onion), and the reopening of the public comment period on the proposed rule to designate critical habitat for Munz's onion. The comment period will provide the public, Federal, State, and local agencies, and Tribes with an opportunity to submit written comments on this proposal and its respective draft economic analysis. Comments previously submitted for this proposed rule need not be resubmitted as they have already been incorporated into the public record and will be fully considered in any final decision.

DATES: We will accept all comments and information until 5 p.m. on or before January 3, 2005. Any comments received after the closing date may not be considered in the final decisions on this action.

ADDRESSES: Written comments and materials may be submitted to us by one of the following methods:

1. You may submit written comments and information to the Field Supervisor, Carlsbad Fish and Wildlife Office, U.S. Fish and Wildlife Service, 6010 Hidden Valley Road, Carlsbad, CA 92009.

2. You may hand-deliver written comments and information to our Carlsbad Fish and Wildlife Office, at the above address, or fax your comments to (760) 731–9618.

3. You may send your comments by electronic mail (e-mail) to *fw1cfwoalmu@r1.fws.gov*. For directions on how to submit electronic filing of comments, see the ''Public Comments Solicited'' section.

Comments and materials received, as well as supporting documentation used in preparation of the proposed critical habitat rule for *Allium munzii* (69 FR 31569) will be available for public inspection, by appointment, during normal business hours at the above address. You may obtain copies of the draft economic analysis for *Allium munzii* by contacting the Carlsbad Fish and Wildlife Office at the above address. The draft economic analysis and the proposed rule for critical habitat designation also are available on the Internet at *http://carlsbad.fws.gov/*. In the event that our Internet connection is not functional, please obtain copies of documents directly from the Carlsbad Fish and Wildlife Office at the above address.

FOR FURTHER INFORMATION CONTACT: Mr. Jim Bartel, Field Supervisor, Carlsbad Fish and Wildlife Office, at the above address (telephone (760) 431–9440; facsimile (760) 431–9618).

SUPPLEMENTARY INFORMATION:

Public Comments Solicited

We solicit comments or suggestions from the public, other concerned governmental agencies, Tribes, the scientific community, industry, or any other interested parties concerning our proposed designation of critical habitat for *Allium munzii* (69 FR 31569) and our draft economic analysis for the proposed critical habitat designation. We particularly seek comments concerning:

(1) The reasons why any habitat should or should not be determined to be critical habitat as provided by section 4 of the Act, including whether the benefit of exclusion outweigh the benefits of specifying such area as part of the critical habitat;

(2) Specific information on the amount and distribution of *Allium munzii* and its habitat, and which habitat is essential to the conservation of the species and why;

(3) Land use designations and current or planned activities in the subject areas and their possible impacts on proposed critical habitat;

(4) Any foreseeable economic, national security or other potential impacts resulting from the proposed designation and, in particular, any impacts on small entities or families;

(5) Whether the economic analysis identifies and adequately addresses the likely effects and resulting costs arising from the California Environmental Quality Act and other State and local laws attributable to the proposed critical habitat designation. If not, what other cost are overlooked?;

(6) Whether the economic analysis makes appropriate assumptions regarding current practices and likely regulatory changes imposed as a result of the designation of critical habitat for *Allium munzii*;

(8) Whether the economic analysis adequately addresses the indirect effects (*e.g.*, property tax losses due to reduced home construction, losses to local business due to reduced construction activity), and accurately defines and captures opportunity costs associated with the critical habitat designation;

(9) Whether the economic analysis correctly assesses the effect on regional costs associated with land and water use regulatory controls that could arise from the designation of critical habitat for this species;

(10) Whether the designation of critical habitat will result in disproportionate economic or other impacts to specific areas that should be evaluated for possible exclusion from the final designation;

(11) Whether the economic analysis is consistent with the Service's listing regulations because this analysis should identify all costs related to the designation of critical habitat for *Allium munzii* and this designation was intended to take place at the time this species was listed; and

(12) All but one known occurrence of *Allium munzii* have been proposed for exclusion from this proposed designation of critical habitat for because they are within approved HCPs or the Western Riverside MSHCP. These areas are proposed for exclusion from critical habitat because we believe the value of excluding these areas outweighs the value of including them. We specifically solicit comment on the inclusion or exclusion of such areas and: (a) Whether these areas are essential; (b) whether these areas warrant exclusion; and (c) the basis for excluding these areas as critical habitat (section 4(b)(2) of the Act); and

(13) Whether our approach to critical habitat designation could be improved or modified in any way to provide for greater public participation and understanding, or to assist us in accommodating public concern and comments.

Comments previously submitted for this proposed rule need not be resubmitted as they have already been incorporated into the public record and will be fully considered in any final decision. If you wish to comment, you may submit your comments and materials concerning this proposal by any one of several methods (*see* **ADDRESSES** section).

If you submit comments via e-mail, please submit them as an ASCII file and avoid the use of special characters or any form of encryption. Please also include ''Attn: RIN 1018–AJ10'' in your e-mail subject header and your name and return address in the body of your message. If you do not receive a confirmation from the system that we have received your internet message, contact us directly by calling our Carlsbad Fish and Wildlife Office at phone number (760) 431–9440. Please note that the e-mail address, *fw1cfwoalmu@r1.fws.gov*, will be closed out at the termination of the public comment period.

Our practice is to make comments, including names and home addresses of respondents, available for public review during regular business hours. Individual respondents may request that we withhold their home addresses from the rulemaking record, which we will honor to the extent allowable by law. There also may be circumstances in which we would withhold from the rulemaking record a respondent's identity, as allowable by law. If you wish us to withhold your name and/or address, you must state this prominently at the beginning of your comment. However, we will not consider anonymous comments. We will make all submissions from organizations or businesses, and from individuals identifying themselves as representatives or officials of organizations or businesses, available for public inspection in their entirety. Comments and materials received will be available for public inspection, by appointment, during normal business hours at the above address.

Background

Allium munzii is a bulb-forming perennial herb in the Liliaceae (lily family). The plants are dormant except in the spring and early summer months, and 3 to 5 years are required after seeds germinate for the plant to reach maturity and produce flowers (Schmidt 1980). *Allium munzii* is endemic to mesic clay soils in western Riverside County,

California, throughout the foothills east of the Santa Ana Mountains extending south and east to the low hills south of Hemet (69 FR 31569; June 4, 2004). At present, there are 19 occurrences of *Allium munzii* according to the California Natural Diversity Database (CNDDB 2004). One historical population in the CNDDB was lost to development; however, the extent of the historical distribution of this plant is unknown. At the time of listing, the Service estimated the total population to be approximately 20,000 to 70,000 individuals. Please refer to the final listing rule for a more detailed discussion of the species' taxonomic history and description.

We published the final rule listing *Allium munzii* as endangered under the Endangered Species Act of 1973, as amended (Act) (16 U.S.C. 1531 *et seq.*), in the **Federal Register** on October 13, 1998 (63 FR 54975). The listing was based on a variety of factors including habitat destruction and fragmentation from agricultural and urban development, clay mining, off-road vehicle activity, cattle and sheep grazing, weed abatement, fire suppression practices, and competition from alien plant species. A recovery plan for this species has not yet been completed.

At the time of listing, we concluded that designation of critical habitat for *Allium munzii* was not prudent because such designation would not benefit the species. On November 15, 2001, a lawsuit was filed against the Department of the Interior (DOI) and the Service by the Center for Biological Diversity and California Native Plant Society, challenging our ''not prudent'' determinations for eight plants including *A. munzii* (No. CV–01–2101) (*CBD et al.* v. *USDOI*). A second lawsuit asserting the same challenge was filed against DOI and the Service by the Building Industry Legal Defense Foundation (BILD) on November 21, 2001 (No. CV–01–2145) (*BILD* v. *USDOI*). Both cases were consolidated on March 19, 2002, and all parties agreed to remand the critical habitat determinations to the Service for additional consideration. In an order dated July 1, 2002, the U.S. District Court for the Southern District of California directed us to reconsider our not prudent finding and publish a proposed critical habitat rule for *Allium munzii*, if prudent, on or before May 30, 2004.

On June 4, 2004, we published a proposed rule to designate critical habitat for *Allium munzii* (69 FR 31569). We proposed to designate 227 acres (ac) (92 hectares (ha)) of critical habitat on Federal (U.S. Forest Service) lands in western Riverside County, California. We excluded 1,068 ac (433 ha) of State, local, and private lands from proposed critical habitat within approved Habitat Conservation Plans (HCPs) and the Western Riverside Multiple Species HCP (MSHCP), Riverside County, California. The first public comment period on the proposed designation closed on August 3, 2004.

Critical habitat identifies specific areas, both occupied and unoccupied, that are essential to the conservation of a listed species and that may require special management considerations or protection. If the proposed rule is made final, section 7 of the Act prohibits the destruction or adverse modification of critical habitat by any activity funded, authorized, or carried out by any Federal agency. Federal agencies proposing actions affecting areas designated as critical habitat must consult with us on the effects of their proposed actions, pursuant to section 7(a)(2) of the Act. We note, however, that a recent 9th Circuit judicial opinion, *Gifford Pinchot Task Force* v. *United State Fish and Wildlife Service*, has invalidated the Service's regulation defining destruction or adverse modification of critical habitat. We are currently reviewing the decision to determine what effect it may have on the outcome of consultations pursuant to section 7 of the Act.

Section 4(b)(2) of the Act requires that we designate or revise critical habitat on the basis of the best scientific and commercial data available, after taking into consideration the economic impact, impact to national security, and any other relevant impacts of specifying any particular area as critical habitat. We have prepared a draft Economic Analysis of the April 27, 2004 (69 FR 31569), proposed designation of critical habitat for *Allium munzii*.

The draft Economic Analysis considers the potential economic effects of actions relating to the conservation of *Allium munzii*, including costs associated with sections 4, 7, and 10 of the Act, and those cost attributable to designating critical habitat. It further considers the economic effects of protective measures taken as a result of other Federal, State, and local laws that aid habitat conservation for *Allium munzii* in essential habitat areas. The analysis considers both economic efficiency and distributional effects. In the case of habitat conservation, efficiency effects generally reflect the ''opportunity costs'' associated with the commitment of resources to comply with habitat protection measures (*e.g.*, lost economic opportunities associated with restrictions on land use). This analysis also addresses how potential economic impacts are likely to be distributed, including an assessment of any local or regional impacts of habitat conservation and the potential effects of conservation activities on small entities and the energy industry. This information can be used by decision-makers to assess whether the effects of the designation might unduly burden a particular group or economic sector. Finally, this analysis looks retrospectively at costs that have been incurred to date since the date the species was listed as endangered species, and projects those costs that may occur in the 20 years following the designation of critical habitat.

Total economic impacts resulting from past *Allium munzii*-related conservation activities (*i.e.*, activities since the species was listed in 1998) on all essential habitat are estimated to be $4.2 million. For the actual component of essential habitat being designated as critical habitat, the total estimated economic impact would be $9,866. In terms of future economic impacts, total economic efficiency costs resulting from *Allium munzii*-related conservation activities are estimated at $6.4 million from 2005 through 2025 for all essential habitat. For the actual component of essential habitat being designated as critical habitat, the total estimated economic efficiency costs would be $23,964 from 2005 through 2025. All of those costs are attributable to project modification and administrative costs that would be borne by the U.S. Forest Service.

Required Determinations

Regulatory Planning and Review

In accordance with Executive Order 12866, this proposed designation of critical habitat is a significant rule only in that it may raise novel legal and policy issues. However, the Economic Analysis indicates that the proposed designation will not have an annual effect on the economy of $100 million or more or affect the economy in a material way. The Office of Management and Budget (OMB) has not formally reviewed this rule.

Regulatory Flexibility Act (5 U.S.C. 601 et seq.)

Under the Regulatory Flexibility Act (5 U.S.C. 601 *et seq.*, as amended by the Small Business Regulatory Enforcement Fairness Act (SBREFA) of 1996), whenever an agency is required to publish a notice of rulemaking for any proposed or final rule, it must prepare and make available for public comment

a regulatory flexibility analysis that describes the effects of the rule on small entities (*i.e.*, small businesses, small organizations, and small government jurisdictions). However, no regulatory flexibility analysis is required if the head of the agency certifies the rule will not have a significant economic impact on a substantial number of small entities. The SBREFA amended the Regulatory Flexibility Act (RFA) to require Federal agencies to provide a statement of the factual basis for certifying that the rule will not have a significant economic impact on a substantial number of small entities. However, the SBREFA does not explicitly define ''substantial number'' or ''significant economic impact.'' Consequently, to assess whether a ''substantial number'' of small entities is affected by this designation, this analysis considers the relative number of small entities likely to be impacted in an area. The SBREFA also amended the RFA to require a certification statement. We are hereby certifying that this proposed rule will not have a significant effect on a substantial number of small entities.

According to the Small Business Administration, small entities include small organizations, such as independent nonprofit organizations, and small governmental jurisdictions, including school boards and city and town governments that serve fewer than 50,000 residents, as well as small businesses (13 CFR 121.201). Small businesses include manufacturing and mining concerns with fewer than 500 employees, wholesale trade entities with fewer than 100 employees, retail and service businesses with less than $5 million in annual sales, general and heavy construction businesses with less than $27.5 million in annual business, special trade contractors doing less than $11.5 million in annual business, and agricultural businesses with annual sales less than $750,000. To determine if potential economic impacts to these small entities are significant, we considered the types of activities that might trigger regulatory impacts under this rule as well as the types of project modifications that may result. In general, the term significant economic impact is meant to apply to a typical small business firm's business operations.

Designation of critical habitat only affects activities conducted, funded, or permitted by Federal agencies; non-Federal activities are not affected by the designation if they lack a Federal nexus. In areas where the species is present, Federal agencies funding, permitting, or implementing activities are already required to avoid jeopardizing the continued existence of *Allium munzii* through consultation with us under section 7 of the Act. If this critical habitat designation is finalized, Federal agencies must also consult with us to ensure that their activities do not destroy or adversely modify designated critical habitat through consultation with us.

Should a federally funded, permitted, or implemented project be proposed that may affect designated critical habitat, we will work with the Federal action agency and any applicant, through section 7 consultation, to identify ways to implement the proposed project while minimizing or avoiding any adverse effect to the species or critical habitat. In our experience, the vast majority of such projects can be successfully implemented with at most minor changes that avoid significant economic impacts to project proponents.

Based on our experience with section 7 consultations for all listed species, virtually all projects—including those that, in their initial proposed form, would result in jeopardy or adverse modification determinations in section 7 consultations—can be implemented successfully with, at most, the adoption of reasonable and prudent alternatives. These measures, by definition, must be economically feasible and within the scope of authority of the Federal agency involved in the consultation. The kinds of actions that may be included in future reasonable and prudent alternatives include avoidance, conservation set-asides, management of competing non-native species, restoration of degraded habitat, construction of protective fencing, and regular monitoring. These measures are not likely to result in a significant economic impact to project proponents.

In the case of *Allium munzii*, our review of the consultation history for this plant suggests that the proposed designation of critical habitat is not likely to have a significant impact on any small entities or classes of small entities. We considered the potential relative cost of compliance to these small entities and evaluated only small entities that are expected to be directly affected by the proposed designation of critical habitat. Based on the consultation history for *Allium munzii*, we do not anticipate that the proposed designation of critical habitat will result in increased compliance costs for small entities. The business activities of these small entities and their effects on *Allium munzii* or its proposed critical habitat have not directly triggered a section 7 consultation with the Service under the jeopardy standard and likely would not trigger a section 7 consultation under the adverse modification standard after designation of critical habitat. The proposed designation of critical habitat does not, therefore, create a new cost for the small entities to comply with the proposed designation. Instead, proposed designation only impacts Federal agencies that conduct, fund, or permit activities that may affect critical habitat for *Allium munzii*. Moreover, none of the small entities have been applicants with a Federal agency for a section 7 consultation with the Service.

As discussed in the Economic Analysis, activities in the proposed critical habitat unit are expected to result in small additional costs borne by the U.S. Forest Service and, possibly, the current special permit holders at the electric tower site. The U.S. Forest Service is a Federal agency and therefore not considered a small entity under SBREFA. In addition, only one of the four special permit holders is a small entity, and the projected impact to that small business is $250 to $1,000 in one year (representing 0.2 to 0.4 of the company's revenue). Utility companies are not expected to incur additional project-related costs in the critical habitat unit, but may incur additional costs in essential habitat areas. However, the utility companies involved do not qualify as small entities. Of the local government jurisdictions in close proximity to the critical habitat unit or essential habitat, only one qualifies as a small government. This government is not expected to be impacted by future conservation efforts for *Allium munzii*, according to the Economic Analysis.

In summary, we have considered whether this proposed designation would result in a significant economic impact on a substantial number of small entities, and we have concluded that it would not. Future consultations are not likely to affect a substantial number of small entities. We have no indication that the types of activities we review under section 7 of the Act will change significantly in the future. Thus, we conclude that the proposed designation of critical habitat for *Allium munzii* is not likely to result in a significant impact to this group of small entities. Therefore, we are certifying that the proposed designation of critical habitat for *Allium munzii* will not have a significant economic impact on a substantial number of small entities, and an initial regulatory flexibility analysis is not required.

Small Business Regulatory Enforcement Fairness Act (5 U.S.C. 801 et seq.)

Under the Small Business Regulatory Enforcement Fairness Act (5 U.S.C. 801 *et seq.*), this rule is not a major rule. As previously discussed, we have excluded critical habitat from lands within the Western Riverside MSHCP and other HCPs under section 4(b)(2) of the Act. The exclusion of these lands and the activities associated with the Western Riverside MSHCP and HCPs eliminates the potential for critical habitat in these excluded areas to have any effect on the increase in costs or prices for consumers or any significant adverse effects on competition, employment, investment, productivity, innovation or the ability of U.S.-based enterprises to compete with foreign-based enterprises. Moreover, 100 percent of the designated critical habitat is on Forest Service lands that are not intensively used for commercial or business purposes, and we anticipate that the designation will have little to no effect on costs or prices for consumers or any other significant commercial or business related activities. In addition, the Economic Analysis indicates that the proposed designation will not have an annual effect on the economy of $100 million or more. Therefore, we believe that this critical habitat designation will not have an effect on the economy of $100 million or more, will not cause a major increase in costs or prices for consumers, and will not have significant adverse effects on competition, employment, investment, productivity, innovation, or the ability of U.S.-based enterprises to compete with foreign-based enterprises.

Author

The primary authors of this notice are the staff of the Carlsbad Fish and Wildlife Office (*see* **ADDRESSES** section).

Authority: The authority for this action is the Endangered Species Act of 1973 (16 U.S.C. 1531 *et seq.*).

Dated: November 23, 2004.

Craig Manson,

Assistant Secretary for Fish and Wildlife and Parks.

[FR Doc. 04–26473 Filed 11–30–04; 8:45 am]

BILLING CODE 4310–55–P

Notices

Federal Register

Vol. 69, No. 230

Wednesday, December 1, 2004

This section of the FEDERAL REGISTER contains documents other than rules or proposed rules that are applicable to the public. Notices of hearings and investigations, committee meetings, agency decisions and rulings, delegations of authority, filing of petitions and applications and agency statements of organization and functions are examples of documents appearing in this section.

DEPARTMENT OF AGRICULTURE

Forest Service

Centennial Salvage Timber Sale, Caribou-Targhee National Forest, Fremont and Clark Counties, ID

AGENCY: Forest Service, USDA.

ACTION: Revision of the Notice of Intent to prepare an Environmental Impact Statement for Centennial Salvage Timber Sale, as published in the **Federal Register** pages 54627 to 54629 on September 9, 2004 (Volume 69, Number 174). This revision includes a change in the purpose and need for action and the proposed action.

SUMMARY: The USDA, Forest Service is preparing an Environmental Impact Statement to document the analysis and disclose the environmental impacts of the proposed Centennial Salvage Timber Sale project. This revised Notice of Intent is to document the changes in the process.

Based on initial internal and external scoping this project has been identified to qualify under Title I of the HFRA (Healthy Forest Restoration Act) Section 102(a)4 due to the existence of a insect epidemic that poses a significant threat to ecosystem components and forest resource values. The purpose of this project has been updated to: Reduce the susceptibility and risk of forested vegetation to Douglas-fir beetle and western spruce budworm, reduce hazardous fuels, and capture economic value from dead and dying trees.

In the original NOI the proposed action proposed to use prescribed fire on 718 acres to remove encroaching shade tolerant conifers and stimulate natural regeneration of whitebark pine and aspen. This has been removed from the proposed action. All other aspects of the original proposed action have remained the same.

DATES: If you have provided comments to this project then you do not need to resubmit your comments. Your comments have been included in the project record. If you have further comments described in this revised NOI or any additional comments please submit your comments by December 13, 2004. An open house informational meeting for this project will be held on December 8, 2004, from 7 p.m. to 9 p.m. at the Ashton Ranger District, 46 Highway 20, Ashton, Idaho. A slide presentation will be given from 7:15 p.m. to 7:30 p.m. describing the project area and proposal.

ADDRESSES: Send written comments to Centennial Salvage Timber Sale, c/o Tom Silvey, Ashton/Island Park Ranger District, P.O. Box 858, Ashton, Idaho 83420. Comments can also be electronically mailed (in Microsoft Word or .rtf format) to: *comments-intermtn-caribou-targhee-ashton-islandpark@fs.fed.us.*

FOR FURTHER INFORMATION CONTACT: Tom Silvey, Interdisciplinary Team Leader, Ashton/Island Park Ranger District, P.O. Box 858, Ashton, Idaho 83420. Telephone: (208) 652–7442.

Dated: November 18, 2004.

Wes Stumbo,

Acting Forest Supervisor.

[FR Doc. 04–26468 Filed 11–30–04; 8:45 am]

BILLING CODE 3410–11–M

DEPARTMENT OF AGRICULTURE

Grain Inspection, Packers and Stockyards Administration

Designation for the Columbus (OH), Farwell (TX), and Northeast Indiana (IN) Areas

AGENCY: Grain Inspection, Packers and Stockyards Administration, USDA. (04–02–S)

ACTION: Notice.

SUMMARY: Grain Inspection, Packers and Stockyards Administration (GIPSA) announces designation of the following organizations to provide official services under the United States Grain Standards Act, as amended (Act): Columbus Grain Inspection, Inc. (Columbus); Farwell Grain Inspection, Inc. (Farwell); and Northeast Indiana Grain Inspection, Inc. (Northeast Indiana).

DATES: *Effective Date:* January 1, 2005.

ADDRESSES: USDA, GIPSA, Janet M. Hart, Chief, Review Branch, Compliance Division, STOP 3604, Room 1647–S, 1400 Independence Avenue, SW., Washington, DC 20250–3604.

FOR FURTHER INFORMATION CONTACT: Janet M. Hart at 202–720–8525, e-mail *Janet.M.Hart@usda.gov*.

SUPPLEMENTARY INFORMATION: This action has been reviewed and determined not to be a rule or regulation as defined in Executive Order 12866 and Departmental Regulation 1512–1; therefore, the Executive Order and Departmental Regulation do not apply to this action.

In the June 1, 2004, **Federal Register** (69 FR 30869), GIPSA asked persons interested in providing official services in the geographic areas assigned to the official agencies named above to submit an application for designation. Applications were due by July 1, 2004.

Columbus, Farwell, and Northeast Indiana were the sole applicants for designation to provide official services in the entire area currently assigned to them, so GIPSA did not ask for additional comments on them.

GIPSA evaluated all available information regarding the designation criteria in Section 7(f)(l)(A) of the Act and, according to Section 7(f)(l)(B), determined that Columbus, Farwell, and Northeast Indiana are able to provide official services in the geographic areas specified in the June 1, 2004, **Federal Register**, for which they applied. These designation actions to provide official inspection services are effective January 1, 2005, and terminate December 31, 2007. Interested persons may obtain official services by calling the telephone numbers listed below.

Official agency	Headquarters location and telephone
Columbus	Circleville, OH—740–474–3519; Additional location: Bucyrus, OH
Farwell	Farwell, TX—806–481–9052; Additional location: Casa Grande, AZ

Official agency	Headquarters location and telephone
Northeast Indiana	Hoagland, IN—260–639–6390

Authority: Pub. L. 94–582, 90 Stat. 2867, as amended (7 U.S.C. 71 *et seq.*).

Donna Reifschneider,

Administrator, Grain Inspection, Packers and Stockyards Administration.

[FR Doc. 04–26289 Filed 11–30–04; 8:45 am]

BILLING CODE 3410–EN–P

DEPARTMENT OF AGRICULTURE

Grain Inspection, Packers and Stockyards Administration

Opportunity To Comment on the Applicants for the Minnesota Area

AGENCY: Grain Inspection, Packers and Stockyards Administration, USDA. (04–03–C)

ACTION: Notice.

SUMMARY: GIPSA requests comments on the applicants for designation to provide official services in the geographic area currently assigned to the Minnesota Department of Agriculture (Minnesota).

DATES: Comments must be postmarked or electronically dated on or before January 3, 2005.

ADDRESSES: We invite you to submit comments on this notice by any of the following methods:

- Hand Delivery or Courier: Deliver to Janet M. Hart, Chief, Review Branch, Compliance Division, GIPSA, USDA, Room 1647–S, 1400 Independence Avenue, SW., Washington, DC 20250.
- Fax: Send by facsimile transmission to (202) 690–2755, attention: Janet M. Hart.
- E-mail: Send via electronic mail to *Janet.M.Hart@usda.gov*.
- Mail: Send hardcopy to Janet M. Hart, Chief, Review Branch, Compliance Division, GIPSA, USDA, STOP 3604, 1400 Independence Avenue, SW., Washington, DC 20250–3604.

Read Comments: All comments will be available for public inspection at the office above during regular business hours (7 CFR 1.27(b)).

FOR FURTHER INFORMATION CONTACT: Janet M. Hart at (202) 720–8525, e-mail *Janet.M.Hart@usda.gov*.

SUPPLEMENTARY INFORMATION: This Action has been reviewed and determined not to be a rule or regulation as defined in Executive Order 12866 and Departmental Regulation 1512–1; therefore, the Executive Order and Departmental Regulation do not apply to this action.

In the September 1, 2004, **Federal Register** (69 FR 53404), GIPSA asked persons interested in providing official services in the Minnesota areas to submit an application for designation.

There were three applicants for the Minnesota area: Minnesota, Sioux City Inspection and Weighing Service Company (Sioux City), both currently designated official agencies; and Kathleen Duea proposing to do business as Southern Minnesota Grain Inspection. Minnesota applied for designation to provide official services in the entire area currently assigned to them. Sioux City applied for all or part of the following Minnesota Counties: Brown, Cottonwood, Jackson, Lincoln, Lyon, Martin, Murray, Nobles, Pipestone, Redwood, Renville, Rock, Watonwan, and Yellow Medicine. Southern Minnesota Grain Inspection applied for all or part of the area currently assigned to Minnesota, and specified all or part of the following Minnesota Counties: Blue Earth, Cottonwood, Faribault, Jackson, Martin, Murray, Nobles, and Watonwan. GIPSA is publishing this notice to provide interested persons the opportunity to present comments concerning the applicants. Commenters are encouraged to submit reasons and pertinent data for support or objection to the designation of the applicants. All comments must be submitted to the Compliance Division at the above address. Comments and other available information will be considered in making a final decision. GIPSA will publish notice of the final decision in the **Federal Register**, and GIPSA will send the applicants written notification of the decision.

Authority: Pub. L. 94–582, 90 Stat. 2867, as amended (7 U.S.C. 71 *et seq.*).

Donna Reifschneider,

Administrator, Grain Inspection, Packers and Stockyards Administration.

[FR Doc. 04–26288 Filed 11–30–04; 8:45 am]

BILLING CODE 3410–EN–P

DEPARTMENT OF AGRICULTURE

Grain Inspection, Packers and Stockyards Administration

Opportunity for Designation in the Georgia, Cedar Rapids (IA), Montana, and Lake Village (IN) Areas, and Request for Comments on the Official Agencies Serving These Areas

AGENCY: Grain Inspection, Packers and Stockyards Administration, USDA. (04–04–A).

ACTION: Notice.

SUMMARY: The designations of the official agencies listed below will end in June 2005. Grain Inspection, Packers and Stockyards Administration (GIPSA) is asking persons interested in providing official services in the areas served by these agencies to submit an application for designation. GIPSA is also asking for comments on the quality of services provided by these currently designated agencies: Georgia Department of Agriculture (Georgia); Mid-Iowa Grain Inspection, Inc. (Mid-Iowa); Montana Department of Agriculture (Montana); and Schneider Inspection Service, Inc. (Schneider).

DATES: Applications and comments must be postmarked or electronically dated on or before January 3, 2005.

ADDRESSES: We invite you to submit applications and comments on this notice. You may submit applications and comments by any of the following methods:

- Hand Delivery or Courier: Deliver to Janet M. Hart, Chief, Review Branch, Compliance Division, GIPSA, USDA, Room 1647–S, 1400 Independence Avenue, SW., Washington, DC 20250.
- Fax: Send by facsimile transmission to (202) 690–2755, attention: Janet M. Hart.
- E-mail: Send via electronic mail to *Janet.M.Hart@usda.gov*.
- Mail: Send hardcopy to Janet M. Hart, Chief, Review Branch, Compliance Division, GIPSA, USDA, STOP 3604, 1400 Independence Avenue, SW., Washington, DC 20250–3604.

Read Applications and Comments: All applications and comments will be available for public inspection at the office above during regular business hours (7 CFR 1.27(b)).

FOR FURTHER INFORMATION CONTACT: Janet M. Hart at 202–720–8525, e-mail *Janet.M.Hart@usda.gov*.

SUPPLEMENTARY INFORMATION: This Action has been reviewed and determined not to be a rule or regulation as defined in Executive Order 12866 and Departmental Regulation 1512–1; therefore, the Executive Order and Departmental Regulation do not apply to this Action.

Section 7(f)(1) of the United States Grain Standards Act, as amended (Act), authorizes GIPSA's Administrator to designate a qualified applicant to provide official services in a specified area after determining that the applicant is better able than any other applicant to provide such official services.

Section 7(g)(1) of the Act provides that designations of official agencies shall end not later than triennially and may be renewed according to the criteria and procedures prescribed in Section 7(f) of the Act.

1. Current Designations being Announced for Renewal. For Georgia, main office in Altanta; Mid-Iowa, main office in Cedar Rapids, Iowa; Montana, main office in Helena; and Schneider, main office in Lake Village, Indiana; the current designations started July 1, 2002 and will end June 30, 2005.

a. Pursuant to Section 7(f)(2) of the Act, the following geographic area, the entire State of Georgia, except those export port locations within the State which are serviced by GIPSA, is assigned to Georgia.

b. Pursuant to Section 7(f)(2) of the Act, the following geographic area, in the State of Iowa, is assigned to Mid-Iowa.

Bounded on the North by the northern Winneshiek and Allamakee County lines;

Bounded on the East by the eastern Allamakee County line; the eastern and southern Clayton County lines; the eastern Buchanan County line; the northern and eastern Jones County lines; the eastern Cedar County line south to State Route 130;

Bounded on the South by State Route 130 west to State Route 38; State Route 38 south to Interstate 80; Interstate 80 west to U.S. Route 63; and

Bounded on the West by U.S. Route 63 north to State Route 8; State Route 8 east to State Route 21; State Route 21 north to D38; D38 east to State Route 297; State Route 297 north to V49; V49 north to Bremer County; the southern Bremer County line; the western Fayette and Winneshiek County lines.

c. Pursuant to Section 7(f)(2) of the Act, the following geographic area, the entire State of Montana, is assigned to Montana.

d. Pursuant to Section 7(f)(2) of the Act, the following geographic area, in the States of Illinois, Indiana, and Michigan, is assigned to Schneider.

In Illinois and Indiana:

Bounded on the North by the northern Will County line from Interstate 57 east to the Illinois-Indiana State line; the Illinois-Indiana State line north to the northern Lake County line; the northern Lake, Porter, Laporte, St. Joseph, and Elkhart County lines;

Bounded on the East by the eastern and southern Elkhart County lines; the eastern Marshall County line;

Bounded on the South by the southern Marshall and Starke County lines; the eastern Jasper County line south-southwest to U.S. Route 24; U.S. Route 24 west to Indiana State Route 55; Indiana State Route 55 south to the Newton County line; the southern Newton County line west to U.S. Route 41; U.S. Route 41 north to U.S. Route 24; U.S. Route 24 west to the Indiana-Illinois State line; and

Bounded on the West by Indiana-Illinois State line north to Kankakee County; the southern Kankakee County line west to U.S. Route 52; U.S. Route 52 north to Interstate 57; Interstate 57 north to the northern Will County line.

Berrien, Cass, and St. Joseph Counties, Michigan.

The following grain elevators, located outside of the above contiguous geographic area, are part of this geographic area assignment: Cargill, Inc., and Farmers Grain, both in Winamac, Pulaski County, Indiana (located inside Titus Grain Inspection, Inc.'s, area).

Schneider's assigned geographic area does not include the export port locations inside Schneider's area which are serviced by GIPSA.

2. Opportunity for designation. Interested persons, including Georgia, Mid-Iowa, Montana, and Schneider are hereby given the opportunity to apply for designation to provide official services in the geographic areas specified above under the provisions of Section 7(f) of the Act and section 800.196(d) of the regulations issued thereunder. Designation in the specified geographic areas is for the period beginning July 1, 2005 and ending June 30, 2008. Persons wishing to apply for designation should contact the Compliance Division at the address listed above for forms and information, or obtain applications at the GIPSA Web site, *http://www.usda.gov/gipsa/oversight/parovreg.htm*.

3. Request for Comments. GIPSA also is publishing this notice to provide interested persons the opportunity to present comments on the quality of services for the Georgia, Mid-Iowa, Montana, and Schneider official agencies. In commenting on the quality of services, commenters are encouraged to submit pertinent data including information on the timeliness, cost, and scope of services provided. All comments must be submitted to the Compliance Division at the above address.

Applications, comments, and other available information will be considered in determining which applicant will be designated.

Authority: Pub. L. 94–582, 90 Stat. 2867, as amended (7 U.S.C. 71 *et seq.*).

Donna Reifschneider,

Administrator, Grain Inspection, Packers and Stockyards Administration.

[FR Doc. 04–26290 Filed 11–30–04; 8:45 am]

BILLING CODE 3410–EN–P

DEPARTMENT OF AGRICULTURE

Natural Resources Conservation Service

Notice of Proposed Changes to the Natural Resources Conservation Service National Handbook of Conservation Practices

AGENCY: Natural Resources Conservation Service (NRCS), USDA.

ACTION: Notice of availability of proposed changes in the NRCS National Handbook of Conservation Practices for public review and comment.

SUMMARY: Notice is hereby given of the intention of NRCS to issue a series of new or revised conservation practice standards in its National Handbook of Conservation Practices. These standards include: Closure of Waste Impoundments (Code 360), Cross Wind Trap Strips (Code 589C), Irrigation Water Management (Code 449), Land Reclamation, Landslide Treatment (Code 453), Mine Shaft and Adit Closing (Code 457), Pond Sealing or Lining, Compacted Clay Treatment (Code 521D), and Water Well (Code 642). NRCS State Conservationists who choose to adopt these practices for use within their States will incorporate them into Section IV of their respective electronic Field Office Technical Guides (eFOTG). These practices may be used in conservation systems that treat highly erodible land, or on land determined to be wetland.

DATES: Comments will be received for a 30-day period commencing with this date of publication. This series of new or revised conservation practice standards will be adopted after the close of the 30-day period.

FOR FURTHER INFORMATION CONTACT: Copies of these standards can be

downloaded or printed from the following Web site: *ftp://ftp-fc.sc.egov.usda.gov/NHQ/practice-standards/federal-register/*. Single copies of these standards are available from NRCS in Washington, DC. Submit individual inquiries in writing to Daniel Meyer, National Agricultural Engineer, Natural Resources Conservation Service, Post Office Box 2890, Room 6139–S, Washington, DC 20013–2890.

SUPPLEMENTARY INFORMATION: Section 343 of the Federal Agriculture Improvement and Reform Act of 1996 requires NRCS to make available, for public review and comment, proposed revisions to conservation practice standards used to carry out the highly erodible land and wetland provisions of the law. For the next 30 days, NRCS will receive comments relative to the proposed changes. Following that period, a determination will be made by NRCS regarding disposition of those comments, and a final determination of changes will be made.

Signed in Washington, DC, on November 17, 2004.

Bruce I. Knight,

Chief, Natural Resources Conservation Service.

[FR Doc. 04–26446 Filed 11–30–04; 8:45 am]

BILLING CODE 3410–16–P

DEPARTMENT OF COMMERCE

[I.D. 112604D]

Submission for OMB Review; Comment Request

The Department of Commerce has submitted to the Office of Management and Budget (OMB) for clearance the following proposal for collection of information under the provisions of the Paperwork Reduction Act (44 U.S.C. Chapter 35).

Agency: National Oceanic and Atmospheric Administration (NOAA).

Title: Emergency Beacon Registrations.

Form Number(s): None.

OMB Approval Number: 0648–0295.

Type of Request: Regular submission.

Burden Hours: 5,000.

Number of Respondents: 20,000.

Average Hours Per Response: 15 minutes.

Needs and Uses: An international system exists to use satellites to detect and locate ships, aircraft, or individuals in distress if they are equipped with an emergency radio beacon. Persons purchasing such a beacon must register it with NOAA. The data provided in the registration can assist in identifying who is in trouble and also suppressing the consequences of false alarms.

Affected Public: Individuals or households; business or other for-profit organizations; not-for-profit institutions; Federal Government; State, Local or Tribal Government.

Frequency: On occasion.

Respondent's Obligation: Mandatory.

OMB Desk Officer: David Rostker, (202) 395–3897.

Copies of the above information collection proposal can be obtained by calling or writing Diana Hynek, Departmental Paperwork Clearance Officer, (202) 482–0266, Department of Commerce, Room 6625, 14th and Constitution Avenue, NW, Washington, DC 20230 (or via the Internet at *dHynek@doc.gov*).

Written comments and recommendations for the proposed information collection should be sent within 30 days of publication of this notice to David Rostker, OMB Desk Officer, FAX number (202) 395–7285, or *David__Rostker@omb.eop.gov*.

Dated: November 23, 2004.

Gwellnar Banks,

Management Analyst, Office of the Chief Information Officer.

[FR Doc. 04–26512 Filed 11–30–04; 8:45 am]

BILLING CODE 3510–HR–S

DEPARTMENT OF COMMERCE

[I.D. 112604C]

Submission for OMB Review; Comment Request

The Department of Commerce has submitted to the Office of Management and Budget (OMB) for clearance the following proposal for collection of information under the provisions of the Paperwork Reduction Act (44 U.S.C. Chapter 35).

Agency: National Oceanic and Atmospheric Administration (NOAA).

Title: Coastal Zone Management Program Administration.

Form Number(s): None.

OMB Approval Number: 0648–0119.

Type of Request: Regular submission.

Burden Hours: 9,361.

Number of Respondents: 35.

Average Hours Per Response: Performance Reports 27 hours; Assessment and Strategy 240 hours; 306A documentation - 5 hours; Amendments and Routine Program Changes 8 hours; and 6217 Nonpoint Pollution Control Program 150 hours.

Needs and Uses: Coastal zone management grants provide funds to states and territories to implement federally approved coastal management plans, revise assessment document and multi-year strategy, submit Section 306A documentation on the approved coastal zone management plans, submit requests to approve amendments or program changes, and to complete the state's coastal nonpoint source pollution program.

Affected Public: State, local or tribal government.

Frequency: On occasion, semi-annually, annually.

Respondent's Obligation: Required to obtain or retain benefits.

OMB Desk Officer: David Rostker, (202) 395–3897.

Copies of the above information collection proposal can be obtained by calling or writing Diana Hynek, Departmental Paperwork Clearance Officer, (202) 482–0266, Department of Commerce, Room 6625, 14th and Constitution Avenue, NW, Washington, DC 20230 (or via the Internet at *dHynek@doc.gov*).

Written comments and recommendations for the proposed information collection should be sent within 30 days of publication of this notice to David Rostker, OMB Desk Officer, FAX number (202) 395–7285, or *David__Rostker@omb.eop.gov*.

Dated: November 23, 2004.

Gwellnar Banks,

Management Analyst, Office of the Chief Information Officer.

[FR Doc. 04–26513 Filed 11–30–04; 8:45 am]

BILLING CODE 3510–JE–S

DEPARTMENT OF COMMERCE

[I.D. 112604B]

Submission for OMB Review; Comment Request

The Department of Commerce has submitted to the Office of Management and Budget (OMB) for clearance the following proposal for collection of information under the provisions of the Paperwork Reduction Act (44 U.S.C. Chapter 35).

Agency: National Oceanic and Atmospheric Administration (NOAA).

Title: Marine Recreational Fisheries Statistics Survey.

Form Number(s): None.

OMB Approval Number: 0648–0052.

Type of Request: Regular submission.

Burden Hours: 43,934.

Number of Respondents: 712,229.

Average Hours Per Response: 7 minutes for fishing households; 7 minutes for party/charter boat operators; 4.5 minutes for intercepted anglers; 3 minutes for supplemental economic data from fishing households; 5 minutes for supplemental economic data from party/charter boat operators; 8 minutes

for supplemental economic data from intercepted anglers; 1.5 minutes for verification calls; 1 minute for non-fishing households, and .5 minutes for non-households.

Needs and Uses: Marine recreational anglers are surveyed for catch and effort data, fish biology data, and angler socioeconomic characteristics. These data are required to carry out provisions of the Magnuson-Stevens Fishery Conservation and Management Act (16 U.S.C. 1801 *et seq.*), as amended, regarding conservation and management of fishery resources.

Affected Public: Business or other for-profit, and individuals or households.

Frequency: On occasion.

Respondent's Obligation: Voluntary.

OMB Desk Officer: David Rostker, (202) 395–3897.

Copies of the above information collection proposal can be obtained by calling or writing Diana Hynek, Departmental Paperwork Clearance Officer, (202) 482–0266, Department of Commerce, Room 6625, 14th and Constitution Avenue, NW, Washington, DC 20230 (or via the Internet at *dHynek@doc.gov*).

Written comments and recommendations for the proposed information collection should be sent within 30 days of publication of this notice to David Rostker, OMB Desk Officer, FAX number (202) 395–7285, or *David__Rostker@omb.eop.gov*.

Dated: November 23, 2004.

Gwellnar Banks,

Management Analyst, Office of the Chief Information Officer.

[FR Doc. 04–26514 Filed 11–30–04; 8:45 am]

BILLING CODE 3510–22–S

DEPARTMENT OF COMMERCE

Bureau of Industry and Security

[Docket Nos. 04–BIS–02 and 04–BIS–03]

Decision and Order

In the Matters of: Technology Options (India) Pvt. Ltd., Pilot #168, Behind Maria Mansion, CST Road, Kalina, Mumbai 400 098 India; and Shivram Rao, of Technology Options (India) Pvt. Ltd., Pilot #168, Behind Maria Mansion, CST Road, Kalina, Mumbai 400 098 India, Respondents.

On February 2, 2004, the Bureau of Industry and Security (''BIS'') issued separate charging letters against the respondents, Technology Options (India) Pvt. Ltd. (Technology Options) and Shivram Rao (Rao), that alleged four violations each of the Export Administration Regulations (Regulations).[1] The charging letters alleged that the respondents each committed one violation of section 764.2(d), two violations of section 764.2(h), and one violation of section 764.2(g) of the Regulations, issued under the Export Administration Act of 1979, as amended (50 U.S.C. app. 2401–2420 (2000)) (''Act'').[2]

Specifically, the charging letters alleged that, on or about April 1, 2002, through on or about August 31, 2001, Technology Options and Shivram Rao, acting in his capacity as Managing Director of Technology Options, conspired with others, known and unknown, to export from the United States to the Indira Ghandi Centre for Atomic Research (''IGCAR'') a thermal mechanical fatigue rest system and a universal testing machine, both items subject to the Regulations, without the required export licenses from BIS as provided in section 744.1(c) of the Regulations. At all relevant times, IGCAR was an organization on the Entity List set forth at Supplement No. 4 to part 744 of the Regulations. In furtherance of the conspiracy, BIS alleged that false documentation as submitted to the U.S. exporter that provided that a party other than IGCAR was the ultimate consignee for the export from the United States of the items at issue. By conspiring to bring about an act in violation of the Regulations, BIS charged that the respondents committed one violation each of section 764.2(d) of the Regulations.

The charging letters further alleged that, in connection with the export of the fatigue test system and universal testing machine to IGCAR, on or about June 13, 2000, and on or about December 21, 2000, the respondents took actions to evade the Regulations, including developing and employing a scheme by which Technology Options would receive the export of the items at issue from the United States without a BIS export license and then divert them to the true ultimate consignee, IGCAR, in violation of the Regulations. BIS alleged that, by engaging in such transactions, the respondents committed two violations each of section 764.2(h) of the Regulations.

Finally, the charging letters alleged that, on or about August 16, 2001 through on or about April 8, 2002, in connection with the export of the fatigue test system reference above, the respondents made false statements to the U.S. Government regarding their knowledge of and involvement in the export. Specifically, BIS alleged that the respondents made inconsistent and false statements to U.S. Foreign Commercial Service Officers regarding the end user of the fatigue test equipment. In doing so, BIS charged that the respondents committed one violation each of section 764.2(g) of the Regulations.

On the basis of the factual record before the Administrative Law Judge (ALJ), he found that the respondents failed to file an answer to BIS's charging letter within the time required by the Regulations. Indeed, service of the notice of issuance of a charging letter on the respondents was properly effected on February 16, 2004, a response to the charging letter was due no later than March 17, 2004, and the record does not include any such response from the respondents. The ALJ therefore held Technology Options and Rao in default.

Under the default procedures set forth in section 766.7(a) of the Regulations, ''[f]ailure of the respondent to file answer within the time provided constitutes a waiver of the respondent's right to appear,'' and ''on BIS's motion and without further notice to the respondent, [the ALJ] shall find the facts to be as alleged in the charging letter.'' Accordingly, on October 28, 2004, the ALJ issued a Recommended Decision and Order, in which he found that the facts alleged in the charging letter constitute the findings of fact in this matter and, thereby, establish that the respondents committed one violation of section 764.2(d), two violations of section 764.2(h), and one violation of section 764.2(g) of the Regulations. The AJL also recommended a penalty of a 15-year denial of the respondents' export privileges.

Pursuant to section 766.22 of the Regulations, the ALJ's Recommended Decision and Order has been referred to me for final action. Based on my review of the entire record, I find that the record supports the ALJ's findings of fact and conclusions of law regarding each of the above-referenced charges. I

[1] The violations charged occurred between 2000 and 2002. The Regulations governing the violations at issue are found in the 2000, 2001, and 2002 versions of the Code of Federal Regulations (15 CFR parts 730 through 774 (2000–2002). The 2004 Regulations establish the procedures that apply to this matter.

[2] From August 21, 1994 through November 12, 2000, the Act was in lapse. During that period, the President, through Executive Order 12924, which had been extended by successive Presidential Notices, the last of which was August 3, 2000 (3 CFR, 2000 Comp. 397 (2001)), continued the Regulations in effect under the International Emergency Economic Powers Act (50 U.S.C. 1701–1706 (2000)) (IEEPA). On November 13, 2000, the Act was reauthorized and it remained in effect through August 20, 2001. Executive Order 13222 was reauthorized (3 CFR, 2001 Comp., p. 783 (2002)), which has been extended by successive Presidential Notices, the most recent being that of August 7, 2003 (68 FR 47833, August 11, 2003), continues the Regulations in effect under IEEPA.

also find that the penalty recommended by the ALJ is appropriate given the nature and scope of the violations, the disregard of the Regulations demonstrated by the respondents, and the lack of any mitigating factors.

Specifically, the respondents engaged in transactions to evade the Regulations and conspired to export items useful in the development or production of nuclear weapons to an organization on the Entity List. BIS charged that Technology Options acted as a front company for the purpose of diverting U.S.-origin items to IGCAR without the necessary authorization. BIS also charged that the respondents did not cooperate with the investigation or participate in this proceeding. Indeed, the respondents made false statements to U.S. officials during the course of the investigation about the true location of the items that had been exported to IGCAR. There are no mitigating factors on the record that would justify a reduction in the denial order. Further, the imposition of a civil penalty in this case may not be effective, given the difficult of collecting payment against a party outside the United States. In light of these circumstances, I affirm the findings of fact and conclusions of law of the ALJ's Recommended Decision and Order.

It is hereby ordered,

First, that, for a period of 10 years from the date on which this Order takes effect, Technology Options (India) Pvt. Ltd. (Technology Options) and Shivram Rao, of Technology Options (both located at Pilot #168, Behind Maria Mansion, CST Road, Kalina, Mumbai 400 098, India), and all of their successors or assigns, and, when acting for or on behalf of Technology Options, its officers, representatives, agents, and employees (individually referred to as ''a Denied Person''), may not, directly or indirectly, participate in any way in any transaction involving any commodity, software, or technology (hereinafter collectively referred to as ''item'') exported or to be exported from the United States that is subject to the Regulations, or in any other activity subject to the Regulations, including, but not limited to:

A. Applying for, obtaining, or using any license, License Exception, or export control document;

B. Carrying on negotiations concerning, or ordering, buying, receiving, using, selling, delivering, storing, disposing of, forwarding, transporting, financing, or otherwise servicing in any way, any transaction involving any item exported or to be exported from the United States that is subject to the Regulation, or in any other activity subject to the Regulations; or

C. Benefiting in any way from any transaction involving any item exported or to be exported from the United States that is subject to the Regulations, or in connection with any other activity subject to the Regulations.

Second, that no person may, directly or indirectly, do any of the following:

A. Export or reexport to or on behalf of a Denied Person any item subject to the Regulations;

B. Take any action that facilitates the acquisition or attempted acquisition by a Denied Person of the ownership, possession, or control of any item subject to the Regulations that has been or will be exported from the United States, including financing or other support activities related to a transaction whereby a Denied Person acquires or attempts to acquire such ownership, possession, or control;

C. Take any action to acquire from or to facilitate the acquisition or attempted acquisition from a Denied Person of any item subject to the Regulations that has been exported from the United States;

D. Obtain from a Denied Person in the United States any item subject to the Regulations with knowledge or reason to know that the item will be, or is intended to be, exported from the United States; or

E. Engage in any transaction to service any item subject to the Regulations that has been or will be exported from the United States and that is owned, possessed, or controlled by a Denied Person, or service any item, of whatever origin, that is owned, possessed, or controlled by a Denied Person if such service involves the use of any item subject to the Regulations that has been or will be exported from the United States. For purposes of this paragraph, ''servicing'' means installation, maintenance, repair, modification, or testing.

Third, that after notice and opportunity for comment as provided in section 766.23 of the Regulations, any person, firm, corporation, or business organization related to a Denied Person by affiliation, ownership, control, or position of responsibility in the conduct of trade or related services may also be made subject to the provisions of this Order.

Fourth, that this Order shall be served on the Denied Persons and on BIS, and shall be published in the **Federal Register**. In addition, the ALJ's Recommended Decision and Order, except for the section with the heading ''Recommended Order,'' shall be published in the **Federal Register**.

This Order, which constitutes the final agency action in this matter, is effective upon publication in the **Federal Register**.

Dated: November 24, 2004.

Kenneth I. Juster,

Under Secretary of Commerce for Industry and Security.

Recommended Decision and Order on Motion for Default Order

On February 2, 2004, the Bureau of Industry and Security, United States Department of Commerce (BIS), issued a charging letter initiating this administrative enforcement proceeding against Technology Options (India) Pvt. Ltd. (''Technology Options''). The charging letter alleged that Technology Options committed one violation of section 764.2(d), one violation of section 764.2(g), and two violations of section 764.2(h) of the Export Administration Regulations (currently codified at 15 CFR parts 730 through 774 (2004)) (the ''Regulations'') [1], issued under the Export Administration Act of 1979, as amended (50 U.S.C. app. 2401–2420 (2000)) (the ''Act'').[2] In accordance with section 766.7 of the Regulations, BIS moved for the issuance of an Order of Default against Technology Options, because Technology Options has not answered or otherwise responded to the charging letter as required by the Regulations.

A. Legal Basis for Issuing an Order of Default

Section 766.7 of the Regulations state that BIS may file a Motion for an Order of Default if a respondent fails to file a timely Answer to a charging letter. That section, entitled ''Default,'' provides in pertinent part:

> Failure of the respondent to file an answer within the time provided constitutes a waiver of the respondent's right to appear and contest the allegations in the charging letter. In such event, the administrative law judge, on BIS's motion and without further notice to the respondent, shall find the facts to be as alleged in the charging letter and render an initial or recommended decision containing findings of fact and appropriate conclusions of law and issue or recommend an order imposing appropriate sanctions.

15 CFR 766.7 (2004).

[1] The violations charged occurred in 2000 and 2001. The Regulations governing the violations at issue are found in the 2000 and 2001 versions of the Code of Federal Regulations (15 CFR parts 730 through 774 (2000–2001)). The 2004 Regulations establish the procedures that apply to this matter.

[2] From August 21, 1994, through November 12, 2000, the Act was in lapse. During that period, the President, through Executive Order 12924, which had been extended by successive Presidential Notices, the last of which was August 3, 2000 (3 CFR 2000 Comp. 397 (2001)), continued the Regulations in effect under the International Emergency Economic Powers Act (50 U.S.C. 1701 through 1706 (2000)) (IEEPA). On November 13, 2000, the Act was reauthorized and it remained in effect through August 20, 2001. Executive Order 13222 of August 17, 2001 (3 CFR, 2001 Comp., p. 783 (2002)), which has been extended by successive Presidential Notices, the most recent being that of August 6, 2004 (69 FR 48763, August 10, 2004), has continued the Regulations in effect under IEEPA.

Pursuant to section 766.7 of the Regulations, as respondent must file an Answer to the charging letter ''within 30 days after being served with notice of the issuance of the charging letter'' initiating the proceeding.

B. Service of the Charging Letter

Section 766.3(b)(1) of the Regulations provides that notice of issuance of a charging letter shall be served on a respondent by mailing a copy via registered or certified mail addressed to the respondent at the respondent's last known address. In accordance with that section, as previously mentioned, on February 2, 2004, BIS sent a notice of issuance of the charging letter by registered mail to Respondent Technology Options, at its last known address: Technology Options (India) Pvt. Ltd., Plot #168, Behind Maria Mansion, CST Road, Kalina, Mumbai 400 098, India. BIS submitted evidence establishing that on February 16, 2004, Technology Options received the notice of issuance of a charging letter. These actions constitute service under the Regulations.

Section 766.6(a) of the Regulations provides, in pertinent part, that ''[t]he respondent must answer the charging letter within 30 days after being served with notice of issuance of the charging letter[.]'' Since service was effectuated on February 16, 2004, Technology Options' Answer to the charging letter was due no later than March 16, 2004. Technology Options did not file an Answer to the Charging letter nor did Technology Options request an extension of time to answer the Charging letter under section 766.16(b)(2). Accordingly, because Technology Options failed to answer or otherwise respond to the charging letter within thirty days from the date he received the notice of issuance of the charging letter, as required by section 766.6 of the Regulations, Technology Options is in default.

C. Summary of Violations

The charging letter filed by BIS included a total of four charges. Specifically, the charging letter alleged that from on or about April 1, 2000, through on or about August 31, 2001, Technology Options conspired with others, known and unknown, to export from the United States to the Indira Gandhi Centre for Atomic Research (''IGCAR'') a thermal mechanical fatigue test system (''fatigue test system'') and a universal testing machine, both items subject to the Regulations, without a BIS export license as required by section 744.11 of the Regulations. *See* Gov't Ex. 3. At all relevant times, IGCAR was an organization listed on the Entity List set forth at Supplement No. 4 to part 744 of the Regulations (''Entity List'').[3] In furtherance of the conspiracy, false documentation was submitted to the United States exporter that provided that a party other than IGCAR was the ultimate consignee for the items to be exported from the United States.

The charging letter further alleged that on or about June 13, 2000, in connection with the export of the fatigue test system and attempted export of the universal testing machine, Technology Options took actions to evade the Regulations. Specifically, Technology Options, with others, known and unknown, developed and employed a scheme by which the company with which Technology Options was affiliated, Technology Options (India) Pvt. Ltd. (''Technology Options''), would receive the export of the fatigue test system from the United States without a BIS license and then divert it to the true ultimate consignee, IGCAR, in violation of the Regulation.

The charging letter also alleged that on or about August 16, 2001, through on or about April 8, 2002, in connection with the export of the fatigue test system references above, Technology Options made false statement to the U.S. Government regarding its knowledge of and involvement in the export. Specifically, Technology Options made misleading and false statements to U.S. Foreign Commercial Service Officers regarding the end user of the fatigue test system.

Pursuant to the default procedures set forth in section 766.7 of the Regulations, I find the facts to be as alleged in the charging letter, and hereby determine that those facts establish that Technology Options committed one violations of section 764.2(d), one violation of section 764(g), and two violations of 764.2(h) of the Regulations.

Section 764.3 of the Regulations establishes the sanctions that BIS may seek for the violations charged in this proceeding. The applicable sanctions are a civil monetary penalty, suspension from practice before the Department of Commerce, and a denial of export privileges under the Regulations. *See* 15 CFR 764.3 (2004).

Because Technology Options violated the Regulations by conspiring and engaging in transactions to evade the Regulations, BIS request that I recommend to the Under Secretary of Commerce for Industry and Security[4] that Technology Options' export privileges be denied for fifteen (15) years. BIS has suggest this sanction because Technology Options has demonstrated a severe disregard for U.S. export control laws. Further, BIS believes that imposition of a civil penalty in this case may be ineffective, given the difficulty of collecting payment against a party outside of the United States. In light of these circumstances, BIS believes that the denial of Technology Options' export privileges for fifteen (15) years is an appropriate sanction.

Given the foregoing, I concur with BIS and recommend that the Under Secretary enter an Order denying Technology Options' export privileges for a period of fifteen (15) years.

The terms of the denial of export privileges against Technology Options should be consistent with the standard language used by BIS in such order. The language is:

[Portions of recommend decision and order REDACTED]

Accordingly, I am referring this Recommended Decision and Order to the Under Secretary for review and final action for the agency, without further notice to the Respondent, as provided in section 766.7 of the Regulations.

Within 30 days after receipt of this Recommended Decision and Order, the Under Secretary shall issue a written order affirming, modifying, or vacating the Recommended Decision and Order. *See* 15 CFR 766.22(c).

The Honorable Joseph N. Ingolia,
Chief Administrative Law Judge.

Done and dated this 27 of October, at Baltimore, MD.

Certificate of Service

I hereby certify that I served the *Recommended Decision and Order* by Federal Express to the following person:

Technology Options (India) Pvt. Ltd., Pilot #168, Behind Maria Mansion, CST Road, Kalina, Mumbai 400 098, India.

Alyssa L. Paladino,
Law Clerk, ALJ Docketing Center, United States Coast Guard, 40 S. Gay Street, Room 412, Baltimore, MD 21202. Phone: (410) 962–7434. Facsimile: (410) 962–1742.

Done and dated this 28 day of October 2004 Baltimore, Maryland.

[FR Doc. 04–26519 Filed 11–30–04; 8:45 am]

BILLING CODE 3510–33–M

[3] The persons on the Entity List are end-users who have been determined to present an unacceptable risk of diversion to the development of weapons of mass destruction or the missiles used to delivery such weapons.

[4] Pursuant to section 13(c)(1) of the Act and section 766.17(b)(2) of the Regulations, in export control enforcement cases, the Administrative Law Judge makes recommended findings of fact and conclusions of law that the Under Secretary must affirm, modify or vacate. The Under Secretary's actions is the final decision for the agency.

DEPARTMENT OF COMMERCE

International Trade Administration

Antidumping or Countervailing Duty Order, Finding, or Suspended Investigation; Opportunity To Request Administrative Review

AGENCY: Import Administration, International Trade Administration, Department of Commerce.

ACTION: Notice of opportunity to request administrative review of antidumping or countervailing duty order, finding, or suspended investigation.

Background

Each year during the anniversary month of the publication of an antidumping or countervailing duty order, finding, or suspension of investigation, an interested party, as defined in section 771(9) of the Tariff Act of 1930, as amended, may request, in accordance with section 351.213 (2004) of the Department of Commerce (the Department) Regulations, that the Department conduct an administrative review of that antidumping or countervailing duty order, finding, or suspended investigation.

Opportunity To Request A Review: Not later than the last day of December 2004, interested parties may request administrative review of the following orders, findings, or suspended investigations, with anniversary dates in December for the following periods:

	Period
Antidumping Duty Proceedings	
ARGENTINA: Honey, A–357–812	12/1/03–11/30/04
BRAZIL:	
Certain Carbon Steel Butt-Weld Pipe Fittings, A–351–602	12/1/03–11/30/04
Silicomanganese, A–351–824	12/1/03–11/30/04
CHILE: Certain Preserved Mushrooms, A–337–804	12/1/03–11/30/04
INDIA:	
Certain Hot-Rolled Carbon Steel Flat Products. A–533–820	12/1/03–11/30/04
INDIA:	
Stainless Steel Wire Rod, A–533–808	12/1/03–11/30/04
INDONESIA: Certain Hot-Rolled Carbon Steel Flat Products, A–560–812	12/1/03–11/30/04
JAPAN:	
Drafting Machines and Parts Thereof, A–588–811	12/1/03–11/30/04
High and Ultra-High Voltage Ceramic Station Post Insulators, A–588–862	6/16/03–11/30/04
Polychloroprene Rubber, A–588–046	12/1/03–11/30/04
P.C. Steel Wire Strand, A–588–068	12/1/03–11/30/04
Welded Large Diameter Line Pipe, A–588–857	12/1/03–11/30/04
REPUBLIC OF KOREA: Welded ASTM A–312 Stainless Steel Pipe, A–580–810	12/1/03–11/30/04
TAIWAN:	
Carbon Steel Butt-Weld Pipe Fittings, A–583–605	12/1/03–11/30/04
Porcelain-On-Steel Cooking Ware, A–583–508	12/1/03–11/30/04
Welded ASTM A–312 Stainless Steel Pipe, A–583–815	12/1/03–11/30/04
THE PEOPLE'S REPUBLIC OF CHINA: Cased Pencils, A–570–827	12/1/03–11/30/04
Honey, A–570–863	12/1/03–11/30/04
Malleable Cast Iron Pipe Fittings, A–570–881	12/2/03–11/30/04
Porcelain-on-Steel Cooking Ware, A–570–506	12/1/03–11/30/04
Silicomanganese, A–570–828	12/1/03–11/30/04
Countervailing Duty Proceedings	
ARGENTINA: Honey, C–357–813	1/1/04–12/31/04
INDIA: Certain Hot-Rolled Carbon Steel Flat Products, C–533–821	1/1/03–12/31/03
INDONESIA: Certain Hot-Rolled Carbon Steel Flat Products, C–560–813	1/1/03–12/31/03
SOUTH AFRICA: Certain Hot-Rolled Carbon Steel Flat Products, C–791–810	1/1/03–12/31/03
THAILAND: Certain Hot-Rolled Carbon Steel Flat Products, C–549–818	1/1/03–12/31/03
Suspension Agreements	
MEXICO: Fresh Tomatoes, A–201–820	12/1/03–11/30/04

In accordance with section 351.213(b) of the regulations, an interested party as defined by section 771(9) of the Act may request in writing that the Secretary conduct an administrative review. For both antidumping and countervailing duty reviews, the interested party must specify the individual producers or exporters covered by an antidumping finding or an antidumping or countervailing duty order or suspension agreement for which it is requesting a review, and the requesting party must state why it desires the Secretary to review those particular producers or exporters. If the interested party intends for the Secretary to review sales of merchandise by an exporter (or a producer if that producer also exports merchandise from other suppliers) which were produced in more than one country of origin and each country of origin is subject to a separate order, then the interested party must state specifically, on an order-by-order basis, which exporter(s) the request is intended to cover.

As explained in *Antidumping and Countervailing Duty Proceedings: Assessment of Antidumping Duties,* 69 FR 23954 (May 6, 2003), the Department has clarified its practice with respect to the collection of final antidumping duties on imports of merchandise where intermediate firms are involved. The public should be aware of this clarification in determining whether to request an administrative review of merchandise subject to antidumping findings and orders. See also the Import Administration Web site at *http://www.ia.ita.doc.gov.*

Six copies of the request should be submitted to the Assistant Secretary for Import Administration, International Trade Administration, Room 1870, Department of Commerce, 14th Street & Constitution Avenue, NW., Washington, DC 20230. The Department also asks parties to serve a copy of their requests to the Office of Antidumping/Countervailing Duty Enforcement, Attention: Sheila Forbes, in room 3065 of the main Commerce Building. Further, in accordance with section 351.303(f)(l)(i) of the regulations, a copy of each request must be served on every party on the Department's service list.

The Department will publish in the **Federal Register** a notice of ''Initiation of Administrative Review of Antidumping or Countervailing Duty Order, Finding, or Suspended Investigation'' for requests received by the last day of December 2004. If the Department does not receive, by the last day of December 2004, a request for review of entries covered by an order, finding, or suspended investigation listed in this notice and for the period identified above, the Department will instruct the Customs Service to assess antidumping or countervailing duties on those entries at a rate equal to the cash deposit of (or bond for) estimated antidumping or countervailing duties

required on those entries at the time of entry, or withdrawal from warehouse, for consumption and to continue to collect the cash deposit previously ordered.

This notice is not required by statute but is published as a service to the international trading community.

Dated: November 23, 2004.

Holly A. Kuga,

Senior Office Director, Office 4 for Import Administration.

[FR Doc. E4–3415 Filed 11–30–04; 8:45 am]

BILLING CODE 3510–DS–P

DEPARTMENT OF COMMERCE

International Trade Administration

Initiation of Five-Year (''Sunset'') Reviews

AGENCY: Import Administration, International Trade Administration, Department of Commerce.

ACTION: Notice of initiation of five-year (''sunset'') reviews.

SUMMARY: In accordance with section 751(c) of the Tariff Act of 1930, as amended (''the Act''), the Department of Commerce (''the Department'') is automatically initiating five-year (''sunset'') reviews of certain antidumping duty orders. The International Trade Commission is publishing concurrently with this notice its notice of *Institution of Five-Year Review* which covers these same orders.

FOR FURTHER INFORMATION CONTACT: Martha V. Douthit, Office of Policy, Import Administration, International Trade Administration, U.S. Department of Commerce at (202) 482–4340, or Mary Messer, Office of Investigations, U.S. International Trade Commission at (202) 205–3193.

SUPPLEMENTARY INFORMATION:

Background

The Department's procedures for the conduct of sunset reviews are set forth in 19 CFR 351.218. Guidance on methodological or analytical issues relevant to the Department's conduct of sunset reviews is set forth in the Department's Policy Bulletin 98.3—*Policies Regarding the Conduct of Five-Year (''Sunset'') Reviews of Antidumping and Countervailing Duty Orders; Policy Bulletin,* 63 FR 18871 (April 16, 1998) (''*Sunset Policy Bulletin*'').

Initiation of Reviews

In accordance with 19 CFR 351.218(c), we are initiating the second sunset reviews of the following antidumping duty orders:

DOC case No.	ITC case No.	Country	Product
A–351–602	A–308	Brazil	Carbon Steel Butt-Weld Pipe Fittings
A–583–605	A–310	Taiwan	Carbon Steel Butt-Weld Pipe Fittings
A–588–602	A–309	Japan	Carbon Steel Butt-Weld Pipe Fittings
A–570–814	A–520	China	Carbon Steel Butt-Weld Pipe Fittings
A–549–807	A–521	Thailand	Carbon Steel Butt-Weld Pipe Fittings
A–588–707	A–386	Japan	Granular Polytetrafluoroethylene Resin
A–475–703	A–385	Italy	Granular Polytetrafluoroethylene Resin

Filing Information

As a courtesy, we are making information related to sunset proceedings, including copies of the Department's regulations regarding sunset reviews (19 CFR 351.218) and *Sunset Policy Bulletin,* the Department's schedule of sunset reviews, case history information (*i.e.,* previous margins, duty absorption determinations and scope language), and service lists available to the public on the Department's sunset Internet Web site at the following address: *http://ia.ita.doc.gov/sunset/.*

All submissions in these sunset reviews must be filed in accordance with the Department's regulations regarding format, translation, service, and certification of documents. These rules can be found at 19 CFR 351.303. Also, we suggest that parties check the Department's sunset Web site for any updates to the service list before filing any submissions. The Department will make additions to and/or deletions from the service list provided on the sunset Web site based on notifications from parties and participation in these reviews. Specifically, the Department will delete from the service list all parties that do not submit a substantive response to the notice of initiation.

Because deadlines in a sunset review are, in many instances, very short, we urge interested parties to apply for access to proprietary information under administrative protective order (''APO'') immediately following publication in the **Federal Register** of the notice of initiation of the sunset review. The Department's regulations on submission of proprietary information and eligibility to receive access to business proprietary information under APO can be found at 19 CFR 351.304–306.

Information Required From Interested Parties

Domestic interested parties (defined in sections 771(9)(C), (D), (E), (F), and (G) of the Act and 19 CFR 351.102(b)) wishing to participate in these sunset reviews must respond not later than 15 days after the date of publication in the **Federal Register** of the notice of initiation by filing a notice of intent to participate. The required contents of the notice of intent to participate are set forth at 19 CFR 351.218(d)(1)(ii). In accordance with the Department's regulations, if we do not receive a notice of intent to participate from at least one domestic interested party by the 15-day deadline, the Department will automatically revoke the orders without further review. *See* 19 CFR 351.218(d)(1)(iii).

If we receive an order-specific notice of intent to participate from a domestic interested party, the Department's regulations provide that *all parties* wishing to participate in the sunset review must file complete substantive responses not later than 30 days after the date of publication in the **Federal Register** of the notice of initiation. The required contents of a substantive response, on an order-specific basis, are set forth at 19 CFR 351.218(d)(3). Note that certain information requirements differ for respondent and domestic parties. Also, note that the Department's information requirements are distinct from the International Trade Commission's information requirements. Please consult the Department's regulations for information regarding the Department's

conduct of sunset reviews.[1] Please consult the Department's regulations at 19 CFR part 351 for definitions of terms and for other general information concerning antidumping and countervailing duty proceedings at the Department.

This notice of initiation is being published in accordance with section 751(c) of the Act and 19 CFR 351.218(c).

Dated: November 24, 2004.

Joseph A. Spetrini,

Acting Assistant Secretary for Import Administration.

[FR Doc. E4–3414 Filed 11–30–04; 8:45 am]

BILLING CODE 3510–DS–P

[1] In comments made on the interim final sunset regulations, a number of parties stated that the proposed five-day period for rebuttals to substantive responses to a notice of initiation was insufficient. This requirement was retained in the final sunset regulations at 19 CFR 351.218(d)(4). As provided in 19 CFR 351.302(b), however, the Department will consider individual requests for extension of that five-day deadline based upon a showing of good cause.

DEPARTMENT OF COMMERCE

International Trade Administration

[A–570–803]

Heavy Forged Hand Tools, Finished or Unfinished, With or Without Handles, From the People's Republic of China: Notice of Amended Final Results of Antidumping Duty Administrative Reviews

AGENCY: Import Administration, International Trade Administration, Department of Commerce.

ACTION: Notice of amended final results of antidumping duty administrative reviews.

EFFECTIVE DATE: December 1, 2004.

FOR FURTHER INFORMATION CONTACT: Tom Martin or Mark Manning at (202) 482–3936 and (202) 482–5253, respectively; Office of AD/CVD Enforcement, Office 4, Import Administration, Room 1870, International Trade Administration, U.S. Department of Commerce, 14th Street and Constitution Avenue, NW., Washington, DC 20230.

SUMMARY: The Department of Commerce (''the Department'') is amending the final results of the administrative reviews of the antidumping duty orders on Heavy Forged Hand Tools, Finished or Unfinished, With or Without Handles (''HFHTs'') from the People's Republic of China (''PRC'') to reflect the correction of ministerial errors in those final results. The period of review (''POR'') is February 1, 2002, through January 31, 2003.

SUPPLEMENTARY INFORMATION:

Background

On September 15, 2004, the Department published the final results of administrative reviews of the antidumping duty orders on HFHTs from the PRC. *See Heavy Forged Hand Tools, Finished or Unfinished, With or Without Handles, From the People's Republic of China: Final Results of Antidumping Duty Administrative Reviews, Final Partial Rescission of Antidumping Duty Administrative Reviews, and Determination Not To Revoke in Part,* 69 FR 55581 (September 15, 2004) (''*Final Results*''). On September 17, 2004, the petitioner, Ames True Temper, submitted comments alleging that the Department made certain ministerial errors in the *Final Results* regarding the cash deposit rate for the PRC-wide entity for hammers/sledges, the assessment rate for the PRC-wide entity for all four HFHTs orders, and the assessment instructions for tampers. On September 20, 2004, the respondents[1] filed rebuttal comments.

Scope of the Review

The products covered by these administrative reviews are HFHTs comprising the following classes or kinds of merchandise: (1) Hammers and sledges with heads over 1.5 kg (3.33 pounds) (hammers/sledges); (2) bars over 18 inches in length, track tools and wedges (bars/wedges); (3) picks and mattocks (picks/mattocks); and (4) axes, adzes and similar hewing tools (axes/adzes).

HFHTs include heads for drilling hammers, sledges, axes, mauls, picks and mattocks, which may or may not be painted, which may or may not be finished, or which may or may not be imported with handles; assorted bar products and track tools including wrecking bars, digging bars, and tampers; and steel woodsplitting wedges. HFHTs are manufactured through a hot forge operation in which steel is sheared to required length, heated to forging temperature, and formed to final shape on forging equipment using dies specific to the desired product shape and size. Depending on the product, finishing operations may include shot blasting, grinding, polishing and painting, and the insertion of handles for handled products. HFHTs are currently provided for under the following Harmonized Tariff Schedule of the United States (''HTSUS'') subheadings: 8205.20.60, 8205.59.30, 8201.30.00, and 8201.40.60. Specifically excluded from these investigations are hammers and sledges with heads 1.5 kg. (3.33 pounds) in weight and under, hoes and rakes, and bars 18 inches in length and under.

The Department has issued four conclusive scope rulings regarding the merchandise covered by these orders: (1) On August 16, 1993, the Department found the ''Max Multi-Purpose Axe,'' imported by the Forrest Tool Company, to be within the scope of the axes/adzes order; (2) on March 8, 2001, the Department found ''18-inch'' and ''24-inch'' pry bars, produced without dies, imported by Olympia Industrial, Inc. and SMC Pacific Tools, Inc., to be within the scope of the bars/wedges order; (3) on March 8, 2001, the Department found the ''Pulaski'' tool, produced without dies by TMC, to be within the scope of the axes/adzes order; and (4) on March 8, 2001, the Department found the ''skinning axe,'' imported by Import Traders, Inc., to be within the scope of the axes/adzes order.

Amended Final Results

After reviewing the ministerial error allegations and the rebuttal comments, we have determined that the Department did make clerical errors in completing the *Final Results,* and we have amended the *Final Results* accordingly. For a detailed discussion of the Department's analysis of the ministerial error allegations, *see* Memorandum from Mark Manning, Acting Program Manager, to Holly A. Kuga, Senior Director, ''Analysis of Ministerial Error Allegations,'' dated concurrently with this notice.

Pursuant to section 751(h) of the Tariff Act of 1930, as amended (''the Act''), we have amended the Final Results by correcting a ministerial error that affected the margin for the PRC-wide entity in the hammers/sledges order. We will issue amended cash-deposit instructions to U.S. Customs and Border Protection (''CBP'') to reflect the amendment of the final results of these reviews. Pursuant to these amended results, we revised the following dumping margin:

Manufacturer/exporter	Margin (percent)
PRC-wide entity: Hammers/Sledges	45.42.

[1] The respondents in this review are Shangdong Huarong Machinery Co., Ltd. (''Huarong''), Liaoning Machinery Import & Export Corporation and Liaoning Machinery Import & Export Corporation, Ltd. (''LMC/LIMAC''), Shandong Machinery Import & Export Corporation (''SMC''), and Tianjin Machinery Import & Export Corporation (''TMC'').

Assessment

Upon completion of these administrative reviews, the Department will determine, and CBP shall assess, antidumping duties on all appropriate entries. In accordance with 19 CFR § 351.212(b)(1), for the respondents receiving calculated dumping margins, we calculated importer-specific per-unit duty assessment rates based on the ratio of the total amount of the dumping duties calculated for the examined sales to the total quantity of those same sales. These importer-specific per-unit rates will be assessed uniformly on all entries of each importer that were made during the POR. In accordance with 19 CFR 351.106(c)(2), we will instruct CBP to liquidate without regard to antidumping duties any entries for which the importer-specific assessment rate is *de minimis* (*i.e.*, less than 0.5 percent *ad valorem*). In testing whether any importer-specific assessment rate is *de minimis*, we divided each importer's total amount of dumping duties by the total value of each importer's U.S. sales, which we calculated using net U.S. prices. Lastly, for the respondents receiving dumping rates based upon AFA, the Department will instruct CBP to liquidate entries according to the AFA *ad valorem* rate. The Department will issue appraisement instructions directly to CBP upon the completion of the final results of these administrative reviews.

Cash Deposit Requirements

The following deposit requirements will be effective upon publication of the final results of these administrative reviews for all shipments of HFHTs from the PRC entered, or withdrawn from warehouse, for consumption on or after the publication date of this notice, as provided for by section 751(a)(1) of the Act: (1) The cash deposit rates for reviewed companies will be the rates for those firms established in the final results of these administrative reviews; (2) for any previously reviewed or investigated PRC or non-PRC exporter not covered in these reviews, with a separate rate, the cash deposit rate will be the company-specific rate established in the most recent segment of these proceedings; (3) for all other PRC exporters, the cash deposit rates will be the PRC-wide rates established in the final results of these reviews; and (4) the cash deposit rate for any non-PRC exporter of subject merchandise from the PRC who does not have its own rate will be the rate applicable to the PRC exporter that supplied the non-PRC exporter. These deposit requirements, when imposed, shall remain in effect until publication of the final results of the next administrative reviews.

The PRC-Wide Cash Deposit Rates

The PRC-wide cash deposit rates are 55.74 percent for axes/adzes, 139.31 percent for bars/wedges, 45.42 percent for hammers/sledges, and 98.77 percent for picks/mattocks. These rates, except for the rate for hammers/sledges, are unchanged from the most recently completed administrative review. *See Heavy Forged Hand Tools, Finished or Unfinished, With or Without Handles, From the People's Republic of China: Final Results of Antidumping Duty Administrative Review of the Order on Bars and Wedges*, 68 FR 53347 (September 10, 2003). These deposit requirements shall remain in effect until publication of the final results of the next administrative reviews.

Notification to Importers

This notice also serves as a final reminder to importers of their responsibility under 19 CFR 351.402(f)(2) to file a certificate regarding the reimbursement of antidumping duties prior to liquidation of the relevant entries during this review period. Failure to comply with this requirement could result in the Secretary's presumption that reimbursement of the antidumping duties occurred and the subsequent assessment of double antidumping duties.

Administrative Protective Orders

This notice also serves as the only reminder to parties subject to administrative protective orders (''APOs'') of their responsibility concerning the return or destruction of proprietary information disclosed under APO in accordance with 19 CFR § 351.305. Timely written notification of the return/destruction of APO materials or conversion to judicial protective order is hereby requested. Failure to comply with the regulations and terms of an APO is a violation which is subject to sanction.

We are issuing and publishing these amended final results in accordance with sections 751(h)of the Act and 19 CFR 351.224.

Dated: November 24, 2004.

Joseph A. Spetrini,

Acting Assistant Secretary for Import Administration.

[FR Doc. E4–3413 Filed 11–30–04; 8:45 am]

BILLING CODE 3510–DS–P

DEPARTMENT OF COMMERCE

National Oceanic and Atmospheric Administration

Partnerships in the Provision of Environmental Information

AGENCY: National Oceanic and Atmospheric Administration, Department of Commerce.

ACTION: Notice of availability.

SUMMARY: The National Oceanic and Atmospheric Administration (NOAA) has adopted a policy regarding the provision of information products and services to the public, which implements relevant provisons of the Paperwork Reduction Act of 1995 (44 U.S.C. part 35) and Office of Management and Budget Circular No. A–130, ''Management of Federal Information Resources.'' This policy will strengthen the existing partnership between government, academia and the private sector, which provides the nation with high quality environmental information.

ADDRESSES: The policy is available electronically at *http://www.nws.noaa.gov/partnershippolicy*. Requests for hard copies should be sent to Room 11404, 1325 East-West Highway, Silver Spring, MD 20910–3283.

FOR FURTHER INFORMATION CONTACT: Peter Weiss 301–713–0258. *peter.weiss@noaa.gov*.

Dated: November 19, 2004.

John E. Jones, Jr.,

Deputy Assistant Administrator for Weather Services.

[FR Doc. 04–26419 Filed 11–30–04; 8:45 am]

BILLING CODE 3510–KE–P

DEPARTMENT OF COMMERCE

Patent and Trademark Office

Submission for OMB Review; Comment Request

The United States Patent and Trademark Office (USPTO) has submitted to the Office of Management and Budget (OMB) for clearance the following proposal for collection of information under the provisions of the Paperwork Reduction Act (44 U.S.C. Chapter 35).

Agency: United States Patent and Trademark Office (USPTO).

Title: Native American Tribal Insignia Database.

Form Number(s): None.

Agency Approval Number: 0651–0048.

Type of Request: Extension of a currently approved collection.

Burden: 3 hours annually.

Number of Respondents: 15 responses per year.

Avg. Hours Per Response: The USPTO estimates that a federally- or state-recognized Native American tribe will require an average of 10 to 12 minutes (0.17 to 0.20 hours) to complete a request to record an official insignia, including gathering the information, preparing the appropriate documents, and submitting the completed request.

Needs and Uses: The Trademark Law Treaty Implementation Act (Pub. L. 105–330, section 302, 112 Stat. 3071 (1998)) required the USPTO to study issues surrounding the protection of the official insignia of federally- and state-recognized Native American tribes under trademark law. At the direction of Congress, the USPTO created a database containing the official insignia of recognized Native American tribes. The insignia database serves as a reference for examining attorneys when determining the registrability of a mark that may be similar to the official insignia of a Native American tribe. The entry of an official insignia into the database does not confer any rights to the tribe that submitted the insignia, and entry is not the legal equivalent of registering the insignia as a trademark under 15 U.S.C. 1051 *et seq.* This information collection is used by the USPTO to enter an official insignia submitted by a federally- or state-recognized Native American tribe into the database. There are no forms associated with this collection.

Affected Public: Tribal governments.

Frequency: On occasion.

Respondent's Obligation: Required to obtain or retain benefits.

OMB Desk Officer: David Rostker, (202) 395–3897.

Copies of the above information collection proposal can be obtained by any of the following methods:

- *E-mail: Susan.Brown@uspto.gov.* Include ''0651–0048 copy request'' in the subject line of the message.
- *Mail:* Susan K. Brown, Records Officer, Office of the Chief Information Officer, Office of Data Architecture and Services, Data Administration Division, U.S. Patent and Trademark Office, P.O. Box 1450, Alexandria, VA 22313–1450.

Written comments and recommendations for the proposed information collection should be sent on or before January 3, 2005 to David Rostker, OMB Desk Officer, Room 10202, New Executive Office Building, 725 17th Street NW., Washington, DC 20503.

Dated: November 23, 2004.

Susan K. Brown,

Records Officer, USPTO, Office of the Chief Information Officer, Office of Data Architecture and Services, Data Administration Division.

[FR Doc. 04–26503 Filed 11–30–04; 8:45 am]

BILLING CODE 3510–16–P

DEPARTMENT OF DEFENSE

Office of the Secretary

Submission for OMB Review; Comment Request

ACTION: Notice.

The Department of Defense has submitted to OMB for clearance, the following proposal for collection of information under the provisions of the Paperwork Reduction Act (44 U.S.C. Chapter 35).

DATES: Consideration will be given to all comments received by January 3, 2005.

Title, Form, and OMB Number: End-Use Certificate; DLA Form 1822; OMB Control Number 0704–0382.

Type of Request: Extension.

Number of Respondents: 40,000.

Response Per Respondent: 1.

Annual Responses: 40,000.

Average Burden Per Response: 20 minutes.

Annual Burden Hours: 13,200.

Needs and Uses: All individuals wishing to acquire government property identified as Munitions List Items (MLI) or Commerce Control List Item (CCLI) must complete this form each time they enter into a transaction. It is used to clear recipients to ensure their eligibility to conduct business with the government. That they are not debarred bidders; Specially Designated Nationals (SDN) or Blocked Persons; have not violated U.S. export laws; will not divert the property to denied/sanctioned countries, unauthorized destinations or sell to debarred/Bidder Experience List firms or individuals. The EUC informs the recipients that when this property is to be exported, they must comply with the International Traffic in Arms Regulation (ITAR), 22 CFR 129 *et seq.*; Export Administration Regulations (EAR), 15 CFR 730 *et seq.*; Office of Foreign Asset Controls (OFAC), 331 CFR 500 *et seq.*; and the United States Customs Service rules and regulations.

Affected Public: Individuals or households; business or other for-profit; not-for-profit institutions.

Frequency: On occasion.

Respondent's Obligation: Required to obtain or retain a benefit.

OMB Desk Officer: Ms. Jacqueline Zeiher.

Written comments and recommendations on the proposed information collection should be sent to Ms. Zeiher at the Office of Management and Budget, Desk Officer for DoD, Room 10236, New Executive Office Building, Washington, DC 20503.

DOD Clearance Officer: Ms. Patricia Toppings.

Written requests for copies of the information collection proposal should be sent to Ms. Toppings, WHS/ESCD/Information Management Division, 1225 South Clark Street, Suite 504, Arlington, VA 22202–4326.

Dated: November 22, 2004.

Patricia L. Toppings,

Alternate OSD Federal Register Liaison Officer, Department of Defense.

[FR Doc. 04–26430 Filed 11–30–04; 8:45 am]

BILLING CODE 5001–06–M

DEPARTMENT OF DEFENSE

Office of the Secretary

Submission for OMB Review; Comment Request

ACTION: Notice.

The Department of Defense has submitted to OMB for clearance, the following proposal for collection of information under the provisions of the Paperwork Reduction Act (44 U.S.C. Chapter 35).

DATES: Consideration will be given to all comments received by January 3, 2005.

Title, Form, and OMB Number: Department of Defense Application for Priority Rating for Production or Construction Equipment; DD Form 691; OMB Control Number 0704–0055.

Type of Request: Extension.

Number of Respondents: 610.

Responses Per Respondent: 1.

Annual Responses: 610.

Average Burden Per Response: 1 hour.

Annual Burden Hours: 610.

Needs and Uses: Executive Order 12919 delegates to DoD authority to require certain contracts and orders relating to approved Defense Programs to be accepted and performed on a preferential basis. This program helps contractors acquire industrial equipment in a timely manner, thereby facilitating development and support of weapons systems and other important Defense Programs.

Affected Public: Business or other for-profit and non-for-profit institutions.

Frequency: On occasion.

Respondent's Obligation: Voluntary.

OMB Desk Officer: Ms. Jacqueline Zeiher.

Written comments and recommendations on the proposed

information collection should be sent to Ms. Zeiher at the Office of Management and Budget, Desk Officer for DoD, Room 10236, New Executive Office Building, Washington, DC 20503.

DOD Clearance Officer: Ms. Patricia Toppings.

Written requests for copies of the information collection proposal should be sent to Ms. Toppings, WHS/ESCD/Information Management Division, 1225 South Clark Street, Suite 504, Arlington, VA 22202–4346.

Dated: November 22, 2004.

Patricial L. Toppings,

Alternate OSD Federal Register Liaison Officer, Department of Defense.

[FR Doc. 04–26431 Filed 11–30–04; 8:45 am]

BILLING CODE 5001–06–M

DEPARTMENT OF DEFENSE

Office of the Secretary

Submission for OMB Review; Comment Request

ACTION: Notice.

The Department of Defense has submitted to OMB for clearance, the following proposal for collection of information under the provisions of the Paperwork Reduction Act (44 U.S.C. Chapter 35).

DATES: Consideration will be given to all comments received by January 3, 2005.

Title and OMB Number: Defense Federal Acquisition Regulation Supplement (DFARS) Part 251, Use of Government Sources by Contractors, and related clauses in DFARS 252.251; OMB Control Number 0704–0252.

Type of Request: Extension.

Number of Respondents: 3,500.

Responses Per Respondent: 3.

Annual Responses: 10,500.

Average Burden Per Response: 30 minutes.

Annual Burden Hours: 5,250.

Needs and Uses: This information collection requirement facilitates contractor use of government supply sources. Contractors must provide certain information to the government to verify their authorization to purchase from government supply sources or to use Interagency Fleet Management System vehicles and related services.

Affected Public: Business or other for-profit and not-for-profit institutions.

Frequency: On occasion.

Respondent's Obligation: Required to obtain or retain benefits.

OMB Desk Officer: Ms. Jacqueline Zeiher. Written comments and recommendations on the proposed information collection should be sent to Ms. Zeiher at the Office of Management and Budget, Desk Officer for DoD, Room 10236, New Executive Office Building, Washington, DC 20503.

DOD Clearance Officer: Ms. Patricia Toppings. Written requests for copies of the information collection proposal should be sent to Ms. Toppings, WHS/ESCD/Information Management Division, 1225 South Clark Street, Suite 504, Arlington, VA 22202–4326.

Dated: November 22, 2004.

Patricia L. Toppings,

Alternate OSD Federal Register Liaison Officer, Department of Defense.

[FR Doc. 04–26432 Filed 11–30–04; 8:45 am]

BILLING CODE 5001–06–M

DEPARTMENT OF DEFENSE

Office of the Secretary

Submission for OMB Review; Comment Request

ACTION: Notice.

The Department of Defense has submitted to OMB for clearance, the following proposal for collection of information under the provisions of the Paperwork Reduction Act (44 U.S.C. Chapter 35).

DATES: Consideration will be given to all comments received by January 3, 2005.

Title and OMB Number: Defense Federal Acquisition Regulation Supplement (DFARS) Part 219, Small business Programs, and the clause at DRAFS 252.219–7003; OMB Control Number 0704–0386.

Type of Request: Extension.

Number of Respondents: 41.

Responses Per Respondent: 1.

Annual Responses: 41.

Average Burden Per Response: 1 hour.

Annual Burden Hours: 41.

Needs and Uses: DoD uses this information in assessing contractor compliance with small business subcontracting plans in accordance with 10 U.S.C. 2323(h).

Affected Public: Business or other for-profit and not-for-profit institutions.

Frequency: On occasion.

Respondent's Obligation: Required to obtain or retain benefits.

OMB Desk Officer: Ms. Jacqueline Zeiher. Written comments and recommendations on the proposed information collection should be sent to Ms. Zeiher at the Office of Management and Budget, Desk Officer for DoD, Room 10236, New Executive Office Building, Washington, DC 20503.

DOD Clearance Officer: Mr. Patricia Toppings. Written requests for copies of the information collection proposal should be sent to Ms. Toppings, WHS/ESCD/Information Management Division, 1225 South Clark Street, Suite 504, Arlington, VA 22202–4326.

Dated: November 22, 2004.

Patricia L. Toppings,

Alternate OSD Federal Register Liaison Officer, Department of Defense.

[FR Doc. 04–26433 Filed 11–30–04; 8:45 am]

BILLING CODE 5001–06–M

DEPARTMENT OF DEFENSE

Office of the Secretary

Submission for OMB Review; Comment Request

ACTION: Notice.

The Department of Defense has submitted to OMB for clearance, the following proposal for collection of information under the provisions of the Paperwork Reduction Act (44 U.S.C. Chapter 35).

DATES: Consideration will be given to all comments received by January 3, 2005.

Title, Form, and OMB Number: Application for Annuity—Certain Military Surviving Spouses; DD Form 2769; OMB Control Number 0704–0402.

Type of Request: Extension.

Number of Respondents: 75.

Responses per Respondent: 1.

Annual Responses: 75.

Average Burden per Response: 1 hour.

Annual Burden Hours: 75.

Needs and Uses: The respondents of this information collection are surviving spouses of each member of the uniformed services who (1) died before March 21, 1974, and was entitled to retired or retainer pay on the date of death or (2) was a member of a reserve component of the Armed Forces before October 1, 1978, and at the time of member's death would have been entitled to retired pay. The Defense Authorization Act of FY 1998, Public Law 105–85, Section 644 (as amended by Pub. Law 105–65, Section 656) requires the Secretary of Defense to pay an annuity to qualified surviving spouses. The DD Form 2769, Application for Annuity—Certain Military Surviving Spouses, used in this information collection, provides a vehicle for the surviving spouse to apply for the annuity benefit. The Department will use this information to determine if the applicant is eligible for the annuity benefit and make payment to the surviving spouse.

Affected Public: Individuals or households.

Frequency: On occasion.

Respondent's Obligation: Required to obtain or retain a benefit.

OMB Desk Officer: Ms. Jacqueline Zeiher. Written comments and recommendations on the proposed information collection should be sent to Ms. Zeiher at the Office of Management and Budget, Desk Officer for DoD, Room 10236, New Executive Office Building, Washington, DC 20503.

DOD Clearance Officer: Ms. Patricia Toppings. Written request for copies of the information collection proposal should be sent to Ms. Toppings, WHS/ESCD/Information Management Division, 1225 South Clark Street, Suite 504, Arlington, VA 22202–4326.

Dated: November 22, 2004.

Patricia L. Toppings,

Alternate OSD Federal Register Liaison Officer, Department of Defense.

[FR Doc. 04–26434 Filed 11–30–04; 8:45 am]

BILLING CODE 5001–06–M

DEPARTMENT OF DEFENSE

Office of the Secretary

Submission for OMB Review; Comment Request

ACTION: Notice.

The Department of Defense has submitted to OMB for clearance, the following proposal for collection of information under the provisions of the Paperwork Reduction Act (44 U.S.C. Chapter 35).

DATES: Consideration will be given to all comments received by January 3, 2005.

Title, Form, and OMB Number: Freight carrier Registration Program (FCR); SDDC Form 410; OMB Control Number 0702–0121.

Type of Request: New.

Number of Respondents: 430.

Responses per Respondent: 1.

Annual Responses: 430.

Average Burden per Response: 15 minutes.

Annual Burden Hours: 108.

Needs and Uses: The FCRP is designed to protect the interest of the government and to ensure that the Department of Defense deals with responsible carriers having the capability to provide quality and dependable service. Information is vital in determining capability to perform quality service transporting DoD freight. Carriers will furnish SDDC with information to assist in determining through other public records whether the company and its officers are responsible contractors.

Affected Public: Business or other for-profit.

Frequency: On occasion.

Respondents Obligation: Required to obtain or retain benefits.

OMB Desk Officer: Ms. Jacqueline Zeiher. Written comments and recommendations on the proposed information collection should be sent to Ms. Zeiher at the Office of Management and Budget, Desk Officer for DoD, Room 10236, New Executive Office Building, Washington, DC 20503.

DOD Clearance Officer: Ms. Patricia Toppings. Written requests for copies of the information collection proposal should be sent to Ms. Toppings, WHS/ESCD/Information Management Division, 1225 South Clark Street, Suite 504, Arlington, VA 22202–4326.

Dated: November 22, 2004.

Patricia L. Toppings,

Alternate OSD Federal Register Liaison Officer, Department of Defense.

[FR Doc. 04–26435 Filed 11–30–04; 8:45 am]

BILLING CODE 5001–06–M

DEPARTMENT OF DEFENSE

GENERAL SERVICES ADMINISTRATION

NATIONAL AERONAUTICS AND SPACE ADMINISTRATION

[OMB Control No. 9000–0001]

Federal Acquisition Regulation; Submission for OMB Review; Standard Form 28, Affidavit of Individual Surety

AGENCIES: Department of Defense (DOD), General Services Administration (GSA), and National Aeronautics and Space Administration (NASA).

ACTION: Notice of request for comments regarding an extension to an existing OMB clearance (9000–0001).

SUMMARY: Under the provisions of the Paperwork Reduction Act of 1995 (44 U.S.C. Chapter 35), the Federal Acquisition Regulation (FAR) Secretariat has submitted to the Office of Management and Budget (OMB) a request to review and approve an extension of a currently approved information collection requirement concerning Standard Form 28, Affidavit of Individual Surety. A request for public comments was published at 69 FR 54653, September 9, 2004. No comments were received.

Public comments are particularly invited on: Whether this collection of information is necessary for the proper performance of functions of the FAR, and whether it will have practical utility; whether our estimate of the public burden of this collection of information is accurate, and based on valid assumptions and methodology; ways to enhance the quality, utility, and clarity of the information to be collected; and ways in which we can minimize the burden of the collection of information on those who are to respond, through the use of appropriate technological collection techniques or other forms of information technology.

DATES: Submit comments on or before January 3, 2005.

ADDRESSES: Submit comments regarding this burden estimate or any other aspect of this collection of information, including suggestions for reducing this burden to the General Services Administration, FAR Secretariat, 1800 F Street, NW, Room 4035, Washington, DC 20405. Please cite OMB Control No. 9000–0001, Standard Form 28, Affidavit of Individual Surety, in all correspondence.

FOR FURTHER INFORMATION CONTACT Cecelia Davis, Contract Policy Division, GSA (202) 219–0202.

SUPPLEMENTARY INFORMATION:

A. Purpose

The Affidavit of Individual Surety (Standard Form (SF) 28) is used by all executive agencies, including the Department of Defense, to obtain information from individuals wishing to serve as sureties to Government bonds. To qualify as a surety on a Government bond, the individual must show a net worth not less than the penal amount of the bond on the SF 28. It is an elective decision on the part of the maker to use individual sureties instead of other available sources of surety or sureties for Government bonds. We are not aware if other formats exist for the collection of this information.

The information on SF 28 is used to assist the contracting officer in determining the acceptability of individuals proposed as sureties.

B. Annual Reporting Burden

Respondents: 500.

Responses Per Respondent: 1.43.

Total Responses: 715.

Hours Per Response: .4.

Total Burden Hours: 286.

Obtaining Copies of Proposals: Requesters may obtain a copy of the information collection documents from the General Services Administration, FAR Secretariat (V), 1800 F Street, NW, Room 4035, Washington, DC 20405, telephone (202) 501–4755. Please cite OMB Control No. 9000–0001, Standard Form 28, Affidavit of Individual Surety, in all correspondence.

Dated: November 24, 2004

Gerald Zaffos

Acting Director, Contract Policy Division.

[FR Doc. 04–26436 Filed 11–30–04; 8:45 am]

BILLING CODE 6820–EP–S

DEPARTMENT OF DEFENSE

GENERAL SERVICES ADMINISTRATION

NATIONAL AERONAUTICS AND SPACE ADMINISTRATION

[OMB Control No. 9000–0045]

Federal Acquisition Regulation; Submission for OMB Review; Bid Guarantees, Performance and Payment Bonds, and Alternative Payment Protections

AGENCIES: Department of Defense (DOD), General Services Administration (GSA), and National Aeronautics and Space Administration (NASA).

ACTION: Notice of request for comments regarding an extension to an existing OMB clearance (9000–0045).

SUMMARY: Under the provisions of the Paperwork Reduction Act of 1995 (44 U.S.C. Chapter 35), the Federal Acquisition Regulation (FAR) Secretariat will be submitting to the Office of Management and Budget (OMB) a request to review and approve an extension of a currently approved information collection requirement concerning bid guarantees, performance and payment bonds, and alternative payment protections. The clearance currently expires on October 31, 2004.

Public comments are particularly invited on: Whether this collection of information is necessary for the proper performance of functions of the FAR, and whether it will have practical utility; whether our estimate of the public burden of this collection of information is accurate, and based on valid assumptions and methodology; ways to enhance the quality, utility, and clarity of the information to be collected; and ways in which we can minimize the burden of the collection of information on those who are to respond, through the use of appropriate technological collection techniques or other forms of information technology.

DATES: Submit comments on or before January 3, 2005.

ADDRESSES: Submit comments regarding this burden estimate or any other aspect of this collection of information, including suggestions for reducing this burden to the General Services Administration, FAR Secretariat (VR), 1800 F Street, NW,Room 4035, Washington, DC 20405. Please cite OMB Control No. 9000–0045, Bid, Performance, and Payment Bonds, in all correspondence.

FOR FURTHER INFORMATION CONTACT
Cecelia Davis, Contract Policy Division, GSA (202) 219–0202.

SUPPLEMENTARY INFORMATION:

A. Purpose

These regulations implement the statutory requirements of the Miller Act (40 U.S.C. 3131–3134), which requires performance and payment bonds for any construction contract exceeding $100,000, unless it is impracticable to require bonds for work performed in a foreign country, or it is otherwise authorized by law. In addition, the regulations implement the note to 40 U.S.C. 3132, entitled ''Alternatives to Payment Bonds Provided by the Federal Acquisition Regulation,'' which requires alternative payment protection for construction contracts that exceed $25,000 but do not exceed $100,000. Although not required by statute, under certain circumstances the FAR permits the Government to require bonds on other than construction contracts.

B. Annual Reporting Burden

Respondents: 11,304.
Responses Per Respondent: 5.
Total Responses: 56,520.
Hours Per Response: .42.
Total Burden Hours: 23,738.
Obtaining Copies of Proposals: Requesters may obtain a copy of the information collection documents from the General Services Administration, FAR Secretariat (VR), 1800 F Street, NW, Room 4035, Washington, DC 20405, telephone (202) 501–4755. Please cite OMB Control No. 9000–0045, Bid, Performance, and Payment Bonds, in all correspondence.

Dated: November 24, 2004

Gerald Zaffos

Acting Director, Contract Policy Division.

[FR Doc. 04–26437 Filed 11–30–04; 8:45 am]

BILLING CODE 6820–EP–S

DEPARTMENT OF DEFENSE

GENERAL SERVICES ADMINISTRATION

NATIONAL AERONAUTICS AND SPACE ADMINISTRATION

[OMB Control No. 9000–0022]

Federal Acquisition Regulation; Submission for OMB Review; Duty-Free Entry

AGENCIES: Department of Defense (DOD), General ServicesAdministration (GSA), and National Aeronautics and SpaceAdministration (NASA).

ACTION: Notice of request for comments regarding an extension to an existing OMB clearance (9000–0022).

SUMMARY: Under the provisions of the Paperwork ReductionAct of 1995 (44 U.S.C. Chapter 35), the Federal Acquisition Regulation (FAR) Secretariat has submitted to the Office of Management and Budget (OMB) a request to review and approve an extension of a currently approved information collection requirement concerning customs and duties. A request for public comments was published in the Federal Register at 69 FR 54654 on September 9, 2004. No comments were received.

Public comments are particularly invited on: Whether this collection of information is necessary for the proper performance of functions of the FAR, and whether it will have practical utility; whether our estimate of the public burden of this collection of information is accurate, and based on valid assumptions and methodology; ways to enhance the quality, utility, and clarity of the information to be collected; and ways in which we can minimize the burden of the collection of information on those who are to respond, through the use of appropriate technological collection techniques or other forms of information technology.

DATES: Submit comments on or before January 3, 2005.

ADDRESSES: Submit comments regarding this burden estimate or any other aspect of this collection of information, including suggestions for reducing this burden to the General Services Administration, FAR Secretariat (V), 1800 F Street, NW, Room 4035, Washington, DC 20405. Please cite OMB Control No. 9000–0022, Duty-Free Entry, in all correspondence.

FOR FURTHER INFORMATION CONTACT
Cecelia Davis, Contract Policy Division, GSA (202) 219–0202.

SUPPLEMENTARY INFORMATION:

A. Purpose

United States laws impose duties on foreign suppliesimported into the customs territory of the United States. Certain exemptions from these duties are available to Government agencies. These exemptions are used whenever the anticipated savings outweigh the administrative costs associated with processing required documentation. When a Government contractor purchases foreign supplies, it mustnotify the contracting officer to determine whether the supplies should be duty-free. In addition, all shipping documents and containers must specify certain information to assure the duty-free entry of the supplies.

The contracting officer analyzes the information submitted by the contractor

to determine whether or not supplies should enter the country duty-free. The information, the contracting officer's determination, and the U.S. Customs forms are placed in the contract file.

B. Annual Reporting Burden

Respondents: 1,330.
Responses Per Respondent: 10.
Total Responses: 13,300.
Hours Per Response: .5.
Total Burden Hours: 6,650.
Obtaining Copies of Proposals: Requesters may obtain a copy of the information collection documents from the General Services Administration, FAR Secretariat (V), 1800 F Street, NW, Room 4035, Washington, DC 20405, telephone (202) 501–4755. Please cite OMB Control No. 9000–0022, Duty-Free Entry, in all correspondence.

Dated: November 19, 2004

Laura Auletta

Director, Contract Policy Division.

[FR Doc. 04–26471 Filed 11–30–04; 8:45 am]

BILLING CODE 6820–EP–S

DEPARTMENT OF EDUCATION

Comprehensive School Reform Quality Initiatives Program

AGENCY: Office of Elementary and Secondary Education, Department of Education.

ACTION: Notice of proposed priorities.

SUMMARY: The Assistant Secretary for Elementary and Secondary Education proposes priorities for the competitions under the Comprehensive School Reform (CSR) Quality Initiatives program to reflect the importance of all children meeting challenging State academic content and State academic achievement standards. The Assistant Secretary may use these proposed priorities for competitions in fiscal year (FY) 2005 and in later years.

DATES: We must receive your comments on or before January 3, 2005.

ADDRESSES: Address all comments about these proposed priorities to Margaret McNeely, U.S. Department of Education, 400 Maryland Avenue, SW., Room 3W103, Washington, DC 20202–6200, Fax (202) 260–8969. If you prefer to send your comments through the Internet, use the following address: *compreform@ed.gov*.

You must include the term COMMENTS in the subject line of your electronic message.

FOR FURTHER INFORMATION CONTACT: Margaret McNeely. Telephone: (202) 260–1335 or via the Internet at *compreform@ed.gov*.

If you use a telecommunications device for the deaf (TDD), you may call the Federal Information Relay Service (FIRS) at 1–800–877–8339.

Individuals with disabilities may obtain this document in an alternative format (*e.g.*, Braille, large print, audiotape or computer diskette) on request to the contact person listed under **FOR FURTHER INFORMATION CONTACT.**

SUPPLEMENTARY INFORMATION:

Invitation To Comment

We invite you to submit written comments regarding these proposed priorities. To ensure that your comments have maximum effect in developing the notice of final priorities, we urge you to identify clearly the specific proposed priority that each comment addresses.

We invite you to assist us in complying with the specific requirements of Executive Order 12866 and its overall requirement of reducing regulatory burden that might result from these proposed priorities. Please let us know of any further opportunities we should take to reduce potential costs or increase potential benefits while preserving the effective and efficient administration of the program.

During and after the public comment period, you may inspect all public comments about these proposed priorities in Room 3W103, 400 Maryland Avenue, SW., Washington, DC, 20202 between the hours of 8:30 a.m. and 4 p.m., Eastern time, Monday through Friday of each week except Federal holidays.

Assistance to Individuals With Disabilities in Reviewing the Rulemaking Record

On request, we will supply an appropriate aid, such as a reader or print magnifier, to an individual with a disability who needs assistance to review the comments or other documents in the public rulemaking record for these proposed priorities. If you want to schedule an appointment for this type of aid, please contact the person listed under **FOR FURTHER INFORMATION CONTACT.**

General

The purpose of the CSR Quality Initiatives program, authorized under section 1608 of the Elementary and Secondary Education Act of 1965, as amended (ESEA), is to provide discretionary grants to support activities that will enhance the State-administered CSR program and to enable schools that have been identified for improvement, corrective action, or restructuring under Title I of the ESEA to meet their State's definition of adequate yearly progress (AYP). Under this program, the Secretary awards funds to support two specific categories of activities: Category 1—technical assistance to States, school districts and schools in making informed decisions regarding approving or selecting providers of comprehensive school reform, and Category 2—capacity building for comprehensive school reform providers to expand their work in more schools, assure quality and promote financial stability.

Background of Proposed Priorities

Grantees under Category 1 assist States, local educational agencies (LEAs), and schools in making informed decisions regarding approving or selecting providers of comprehensive school reform, consistent with the requirements of section 1606(a) of the ESEA, as amended. Research and evaluation studies of comprehensive school reform implementation indicate that schools in need of improvement face a myriad of challenges in meeting AYP. One of these challenges is to expand the knowledge of district and school personnel regarding school reform strategies and methods so that they can effectively assist in identifying clearly the teaching and learning needs of the school and can identify the service provider that can best meet those needs. With more quality information about the problem areas and scientifically-based solutions, schools will be in a stronger position to implement school reforms effectively. In addition to the need for schools and districts to become better consumers of school reform data and research, school- and district-based reformers need to have a better understanding of the timeline for implementing the necessary changes in teaching and learning and how to track student achievement gains throughout the process. Accordingly, we are proposing a priority for Category 1 projects that will provide States, districts and schools with high-quality information tools and other forms of technical assistance to identify the instructional needs of students and to select a reform approach and provider to meet those needs effectively so that all students are able to meet challenging State academic content and student achievement standards and so that schools are able to make AYP.

To implement the matching requirements of the ESEA, we are also proposing a priority for Category 1 projects that propose to match Federal funds received under this competition with funds from one or more private organizations.

Category 2 projects foster the development of comprehensive school reform models and provide effective capacity building for comprehensive school reform providers to expand their work in more schools and ensure quality. Meeting the needs of all students within CSR schools, including traditionally underserved students such as students with disabilities, limited English proficient students and students in rural areas, requires additional development efforts on the part of CSR service providers. Although some service providers recommend one or more strategies for including these underserved students, there is still a need to provide schools with better information, guidance and professional development on how to serve these students specifically. Thus, for Category 2 projects, we are proposing a priority for projects that will focus activities on developing and testing strategies to meet the needs of these groups of students.

We are also proposing a priority that would apply to both Category 1 and Category 2 projects. Both the technical assistance and capacity building projects are national in scope thus impacting more than one school, district or State. The strategies and approaches developed by the Category 1 projects will be used across the country and across site-specific conditions. Therefore, the most effective technical assistance effort will take place in varied sites. For the Category 2 projects, the focus is on improving services to students and should be developed and tested across multiple locations and conditions. Thus, for both Category 1 and Category 2 projects, we are proposing a priority that would provide assistance to LEAs in more than one State.

Discussion of Priorities

We will announce the final priorities in a notice in the **Federal Register**. We will determine the final priorities after considering written responses to this notice and other information available to the Department. This notice does not preclude us from proposing or funding additional priorities, subject to meeting applicable rulemaking requirements.

Note: This notice does not solicit applications. In any year in which we choose to use these proposed priorities, we invite applications through a notice in the **Federal Register**. When inviting applications we designate the priority as absolute, competitive preference, or invitational. The effect of each type of priority follows:

Absolute Priority: Under an absolute priority we consider only applications that meet the priority (34 CFR 75.105(c)(3)).

Competitive Preference Priority: Under a competitive preference priority we give competitive preference to an application by either (1) awarding additional points, depending on how well or the extent to which the application meets the competitive priority (34 CFR 75.105 (c)(2)(i)); or (2) selecting an application that meets the competitive priority over an application of comparable merit that does not meet the priority (34 CFR 75.105(c)(2)(ii)).

Invitational Priority: Under an invitational priority we are particularly interested in applications that meet the invitational priority. However, we do not give a competitive or absolute preference over other applications (34 CFR 75.105(c)(1)).

Priorities

Proposed Priority for Category 1 Applicants

To help ensure that the activities supported under Category 1 (technical assistance in making informed decisions) of the CSR Quality Initiatives program best address the needs of States, districts and schools, the Assistant Secretary proposes the following priority:

The grantee will provide assistance to States, LEAs and schools in selecting a comprehensive school reform provider or developing comprehensive school reforms for schools that are identified as being in need of improvement, corrective action, or restructuring under section 1116 of the Elementary and Secondary Education Act of 1965, as amended. The applicant will provide a plan for providing States, LEAs and schools with information tools and technical assistance in such areas as using data to identify the instructional needs of students and to clarify the technical assistance and professional development needs of teachers and administrators.

Proposed Priority for Category 1 Applicants

For Category 1 grants, the statute requires that the awards be matched with funds from private organizations. In response to this requirement, the Assistant Secretary proposes the following priority:

The applicant must demonstrate, in its grant application, that its CSR Quality Initiative award will be matched with funds from one or more private organizations. For each year that a grantee receives a CSR Quality Initiative award, the match, including any in-kind contributions, must total at least 10 percent of the award.

Proposed Priority for Category 2 Applicants

To help ensure that all children meet challenging State academic content and academic achievement standards, the Assistant Secretary proposes the following priority for Category 2 applicants:

The applicant will implement activities to: (1) Develop and field-test specific instructional strategies to meet the needs of students who have been traditionally underserved by comprehensive reform providers, such as students with disabilities and students with limited English proficiency and to integrate those strategies into scientifically research-based comprehensive school reforms, or (2) increase the capacity of comprehensive reform providers to serve students in rural areas. These strategies or capacities could be additions or enhancements to existing CSR models or services already being provided.

Proposed Priority for Category 1 and 2 Applicants

The Assistant Secretary proposes the following priority for Category 1 and Category 2 grants:

The grantee will assist LEAs in more than one State.

Executive Order 12866

This notice of proposed priorities has been reviewed in accordance with Executive Order 12866. Under the terms of the order, we have assessed the potential costs and benefits of this regulatory action.

The potential costs associated with the notice of proposed priorities are those resulting from statutory requirements and those we have determined as necessary for administering this program effectively and efficiently to provide the most benefits for the greatest number of students.

In assessing the potential costs and benefits—both quantitative and qualitative—of this notice of proposed priorities, we have determined that the benefits of the proposed priorities justify the costs.

We have also determined that this regulatory action does not unduly interfere with State, local and tribal governments in the exercise of their governmental functions.

Summary of potential costs and benefits: The potential costs associated with these proposed priorities are minimal, while the benefits are significant. Grantees may anticipate costs associated with completing the

application process in terms of staff time, copying, and mailing or delivery. The use of e-Application technology reduces mailing and copying costs significantly.

The benefits of the CSR Quality Initiatives projects are in helping low-performing schools make AYP. These proposed priorities will generate new strategies for schools, districts, and States so that all students are able to meet challenging State academic content and student achievement standards.

Intergovernmental Review

This program is subject to Executive Order 12372 and the regulations in 34 CFR part 79. One of the objectives of the Executive Order is to foster an intergovernmental partnership and a strengthened federalism. The Executive Order relies on processes developed by State and local governments for coordination and review of proposed Federal financial assistance.

This document provides early notification of our specific plans and actions for this program.

Electronic Access to This Document

You may view this document, as well as all other Department of Education documents published in the **Federal Register**, in text or Adobe Portable Document Format (PDF) on the Internet at the following site: *http://www.ed.gov/news/fedregister*.

To use PDF you must have Adobe Acrobat Reader, which is available free at this site. If you have questions about using PDF, call the U.S. Government Printing Office (GPO), toll free, at 1–888–293–6498; or in the Washington, DC, area at (202) 512–1530.

You may also view this document in text at the Applicant Information link of the following site: *http://www.ed.gov/programs/compreform*.

Note: The official version of this document is the document published in the **Federal Register**. Free Internet access to the official edition of the **Federal Register** and the Code of Federal Regulations is available on GPO Access at: *http://www.gpoaccess.gov/nara/index.html*

(Catalog of Federal Domestic Assistance Number 84.322B Comprehensive School Reform—Quality Initiatives)

Program Authority: 20 U.S.C. 6518.

Dated: November 26, 2004.

Raymond Simon,

Assistant Secretary for Elementary and Secondary Education.

[FR Doc. E4–3404 Filed 11–30–04; 8:45 am]

BILLING CODE 4000–01–P

DEPARTMENT OF EDUCATION

Arbitration Panel Decision Under the Randolph-Sheppard Act

AGENCY: Department of Education.

ACTION: Notice of arbitration panel decision under the Randolph-Sheppard Act.

SUMMARY: The Department gives notice that on July 26, 2002, an arbitration panel rendered a decision in the matter of *Kentucky Department for the Blind* v. *U.S. Department of Defense, Department of the Army (Docket No. R–S/01–11).* This panel was convened by the U.S. Department of Education, under 20 U.S.C. 107d–1(b), after the Department received a complaint filed by the petitioner, the Kentucky Department for the Blind.

FOR FURTHER INFORMATION CONTACT: You may obtain a copy of the full text of the arbitration panel decision from Suzette E. Haynes, U.S. Department of Education, 400 Maryland Avenue, SW., Room 5022, Potomac Center Plaza, Washington, DC 20202–2800. Telephone: (202) 245–7374. If you use a telecommunication device for the deaf (TDD), you may call the Federal Information Relay Service (FIRS) at 1–800–877–8339.

Individuals with disabilities may obtain this document in an alternative format (*e.g.*, Braille, large print, audiotape, or computer diskette) on request to the contact person listed in the preceding paragraph.

SUPPLEMENTARY INFORMATION: Under section 6(c) of the Randolph-Sheppard Act (the Act), 20 U.S.C. 107d–2(c), the Secretary publishes in the **Federal Register** a synopsis of each arbitration panel decision affecting the administration of vending facilities on Federal and other property.

Background

This dispute concerns the alleged noncompliance with the Act by the U.S. Department of Defense, Department of the Army (the Army), regarding its cancellation of a food service contract at Ft. Campbell, Kentucky, operated by the Kentucky Department for the Blind, the State licensing agency (SLA), in violation of the Act (20 U.S.C. 107 *et seq.*) and the implementing regulations in 34 CFR part 395.

A summary of the facts is as follows: On February 15, 1996, the SLA was awarded a contract to provide full food services in the military dining facilities at Ft. Campbell, Kentucky. Following the contract award, the SLA appointed a qualified Randolph-Sheppard vendor to perform the contract requirements. Subsequently, the vendor entered into a joint venture contract agreement with First Choice Food Service to assume the contractual obligations.

On January 21, 2000, at the end of the third option period for the food service contract at Ft. Campbell, the SLA contacted the Army to request that both parties enter into negotiations for the continuation of the food service contract. The Army did not respond to this initial request. Then on August 9, 2000, both parties met to discuss continuation of the food service contract, but this meeting did not result in a negotiated contract.

Later in March 2001, the SLA alleged that, without explanation, the Army discontinued the SLA's contract effective April 1, 2001. The SLA further alleged that, despite repeated requests to negotiate the Ft. Campbell food service contract with the Army, there was no communication until June 20, 2001, when an Army contracting officer posted a solicitation announcement in Commerce Business Daily (CBD) for provision of the dining facility attendant services at Ft. Campbell. The procurement was limited to Small Business Administration (SBA) certified personnel.

On July 25, 2001, the Governor of Kentucky wrote to the Secretary of the Army requesting that the Army reconsider its decision to exclude the SLA from competing for the contract to provide dining facility attendant services at Ft. Campbell. The Army did not respond to the Governor's letter. On August 14, 2001, the Army amended its CBD announcement. On August 24, the Army issued a solicitation stating that the procurement was to be administered by an SBA 8(a) set-aside contractor.

The SLA alleged that, as the result of a recent court case, *NISH and Goodwill Services, Inc.* v. *Cohen*, 95 F. Supp.2d 497, 503–04 (E.D. Va. 2000), military dining facilities have been determined to come within the definition of cafeteria under the Act.

The SLA further maintained that neither the Act nor its implementing regulations differentiate between the performance of ''full food services'' or ''dining facility attendant services'' in military dining facilities. In fact, it was the SLA's position that dining facility attendant services and full food services constitute cafeteria operations under the Act.

Therefore, the SLA alleged that the Army's refusal to allow the SLA to renegotiate its food service contract at Ft. Campbell demonstrated the Army's unwillingness to comply with the Act and its implementing regulations.

As a result of this dispute, the SLA requested the Secretary of Education to convene a Federal arbitration panel to hear this complaint. A panel was convened, and a hearing on this matter was held on May 13, 2002.

Arbitration Panel Decision

The arbitration panel heard the following issue: whether the Army's alleged failure to negotiate with the SLA in good faith for the full food services and dining facility attendant services contract at Ft. Campbell, Kentucky, constituted a violation of the Act (20 U.S.C. 107 *et seq.*) and the implementing regulations in 34 CFR part 395.

After considering the evidence presented, the majority of the panel ruled that the Act clearly covers all types of food service operations including military troop dining facilities. The panel stated that the Army's provision of cooks for the dining facility at Ft. Campbell did not mandate the exclusion of the SLA from the opportunity to provide other services.

Further, the panel found that the Army's issuance of a new solicitation amounted to a limitation on the placement or operation of vending facility services on Federal property as provided by the Act. The panel also noted that the Act states that Federal agencies may give priority to SLAs through direct negotiation whenever a vending facility can be provided at a reasonable cost with food of a high quality, comparable to that currently provided.

Accordingly, the panel ruled that the Army failed to present any evidence that it complied with the requirements of the Act and the implementing regulations prior to excluding the SLA from its procurement for food services at Ft. Campbell, Kentucky.

Therefore, the panel ruled that the Army should engage in direct negotiations with the SLA for its dining facility attendant services requirement at Ft. Campbell, Kentucky.

One panel member dissented.

The views and opinions expressed by the panel do not necessarily represent the views and opinions of the U.S. Department of Education.

Electronic Access to This Document

You may view this document, as well as all other Department of Education documents published in the **Federal Register**, in text or Adobe Portable Document Format (PDF) on the Internet at the following site: *www.ed.gov/news/fedregister.*

To use PDF you must have Adobe Acrobat Reader, which is available free at this site. If you have questions about using PDF, call the U.S. Government Printing Office (GPO), toll free, at 1–888–293–6498; or in the Washington, DC, area at (202) 512–1530.

Note: The official version of this document is the document published in the **Federal Register**. Free Internet access to the official edition of the **Federal Register** and the Code of Federal Regulations is available on GPO Access at: *http://www.gpoaccess.gov/nara/index.html.*

Dated: November 24, 2004.

Troy R. Justesen,

Acting Deputy Assistant Secretary for Special Education and Rehabilitative Services.

[FR Doc. E4–3400 Filed 11–30–04; 8:45 am]

BILLING CODE 4000–01–P

DEPARTMENT OF ENERGY

Revision of the Record of Decision for a Nuclear Weapons Nonproliferation Policy Concerning Foreign Research Reactor Spent Nuclear Fuel

AGENCY: Department of Energy, National Nuclear Security Administration.

ACTION: Revision of a record of decision.

SUMMARY: The U.S. Department of Energy (DOE), in consultation with the Department of State, has decided to revise its Record of Decision (ROD) for the Final Environmental Impact Statement on a Proposed Nuclear Weapons Nonproliferation Policy Concerning Foreign Research Reactor Spent Nuclear Fuel, issued on May 13, 1996 (61 FR 15902, May 17, 1996). That decision established the U. S. Nuclear Weapons Nonproliferation Policy Concerning Foreign Research Reactor (FRR) Spent Nuclear Fuel (SNF) (hereinafter referred to as the ''Acceptance Policy''), which provides for DOE acceptance of SNF containing uranium enriched in the United States from research reactors located in 41 countries. Under the current Acceptance Policy, only material of U.S. origin that is irradiated and discharged from reactors before May 13, 2006, is eligible for acceptance. Eligible SNF can be accepted through May 12, 2009. DOE has decided to extend the Acceptance Program for an additional 10 years, until May 12, 2016, for irradiation of eligible fuel, and until May 12, 2019, for fuel acceptance. DOE will also accept a small number of SNF elements from a reactor in Australia scheduled to be commissioned after 2005 to replace a reactor currently eligible for the acceptance program, and analyzed in the FRR SNF Environmental Impact Statement (EIS).

With less than 2 years remaining until the expiration date for irradiation of eligible fuel and less than 5 years remaining for fuel acceptance, DOE has received only about 35 percent of the material eligible for return as estimated in the Final Environmental Impact Statement on a Proposed Nuclear Weapons Nonproliferation Policy Concerning Foreign Research Reactor Spent Nuclear Fuel (FRR SNF EIS, DOE/EIS–0218, February 1996), on which the ROD was based. This is because some countries with eligible fuel have not used their fuel as rapidly as projected in 1996, some countries have made alternative spent fuel processing arrangements, and there have been technical delays in the development of new low-enriched uranium (LEU) fuels to enable research reactors to convert from high-enriched uranium (HEU), which can be used to create nuclear weapons.

DOE prepared a Supplement Analysis for the FRR SNF EIS, in accordance with DOE National Environmental Policy Act (NEPA) implementing regulations (10 CFR part 1021). This analysis evaluated the potential health and environmental impacts of extending the program for 5 and 10 years, and of including a small number of additional fuel elements from the Australian Replacement Research Reactor (RRR). The analysis concluded that, although there could be very small increases in health impacts such as from SNF transportation over the extended period, these increases would not significantly change the results reported in the FRR SNF EIS. Accordingly, DOE has determined that a supplement to the FRR SNF EIS is not required.

ADDRESSES: For copies of the Supplement Analysis, or for further information about the FRR SNF Acceptance Program, contact: Catherine R. Mendelsohn, Acting Director, Office of Global Nuclear Material Threat Reduction, Office of Global Threat Reduction, National Nuclear Security Administration, U.S. Department of Energy, NA–21, 1000 Independence Avenue, SW., Washington DC 20585, (202) 586–0275, fax: (202) 586–6789, *kasia.mendelsohn@hq.doe.gov.*

The Supplement Analysis and related information will be available on DOE's NEPA web site at *http://www.eh.doe.gov/nepa/* and in the DOE Public Reading Room as follows: U.S. Department of Energy, 1000 Independence Avenue, SW., Room 1E–190, Washington, DC 20585, (202) 586–5955. The Public Reading Room is open from 9 a.m. to 4 p.m., Monday to Friday, except Federal holidays.

FOR FURTHER INFORMATION CONTACT: For information concerning the FRR SNF Acceptance Policy and program, contact Ms. Catherine R. Mendelsohn at the address or telephone number provided above. Information on the DOE NEPA process may be requested from: Carol M. Borgstrom, Director, Office of NEPA Policy and Compliance (EH–42), U.S. Department of Energy, 1000 Independence Avenue, SW., Washington, DC 20585. Ms. Borgstrom may be contacted by telephone at (202) 586–4600 or by leaving a message at (800) 472–2756.

SUPPLEMENTARY INFORMATION:

Background

DOE issued a ROD on May 13, 1996 (61 FR 25092, May 17, 1996), based on the FRR SNF EIS (DOE/EIS–0218, February 1996), for which the U.S. Department of State was a cooperating agency, stating that DOE would accept FRR SNF containing uranium that was enriched in the United States from 107 research reactors located in 41 countries. The ROD further stated that only SNF that is irradiated and discharged from eligible reactors before May 12, 2006, can be accepted. This SNF can be accepted in the United States through May 12, 2009.

From May 1996, when the FRR SNF ROD was issued, to the present, only about 35 percent of the SNF estimated in the FRR SNF EIS to be eligible for the acceptance program has been received. Most of the accepted FRR SNF elements are aluminum-based spent fuel currently stored at the Savannah River Site (SRS). The remaining FRR SNF is Training, Research, Isotope, General Atomics spent fuel stored at the Idaho National Engineering and Environmental Laboratory (INEEL). All of the FRR SNF will ultimately be disposed of at a geologic repository.

As of November 2004, 30 shipments of FRR SNF have been received in the United States. Of these 30 shipments, 1 shipment arrived at the Concord Naval Weapons Station in California, and was transported to INEEL. Two shipments entered overland through Canada and were sent to SRS. The remaining 27 shipments arrived at the Charleston Naval Weapons Station in South Carolina, with 5 of these shipments going to INEEL and 22 shipments going to SRS. No accidents involving FRR SNF have occurred, and no shipment received under the Acceptance Program has resulted in a release of radioactive material from a cask containing FRR SNF.

Approximately 2 years remain until the Acceptance Policy's expiration date for irradiation of eligible fuel and 5 years remain for acceptance of eligible FRR SNF. DOE has received only about 35 percent of the total SNF elements estimated in 1996 because some countries with eligible fuel have not used their fuel as rapidly as projected in 1996, some countries have made alternative spent fuel processing arrangements, and there have been technical delays in the development of new low-enriched uranium (LEU) fuels to enable research reactors to convert from high-enriched uranium (HEU), which can be used to create nuclear weapons.

The current Acceptance Policy applies only to reactors that were operational in May 1996, when the Policy was established. Although the High Flux Australian Reactor (HIFAR) has been operational since 1958 and is eligible to participate in the acceptance program, this reactor has been scheduled since 1997 for decommissioning in 2006. The HIFAR is expected to have used all of its fuel by that time. Australia's Research Replacement Reactor (RRR), scheduled for commissioning in 2005, will assume the HIFAR research and medical isotope activities. In effect, the RRR represents a conversion from the HEU used in the HIFAR to a new type of LEU fuel that can be processed by non-U.S. facilities. The delays in developing this new fuel will mean, however, that the RRR must use a currently available type of LEU fuel until approximately 2012. It is expected that SNF resulting from the irradiation of the currently available LEU fuel would need to be managed in the United States and would add a small number of fuel elements, approximately 96 elements, to the 1996 total estimate of approximately 22,700 elements. All of the Australian SNF would be managed at SRS until disposal is available at a geologic repository.

Purpose and Need for Action

Reducing the threat posed by the proliferation of nuclear weapons is a foremost goal of the United States. To continue to meet DOE's objective of reducing, and eventually eliminating, HEU of U.S. origin from civil commerce worldwide, DOE needs to extend its FRR SNF Acceptance Policy to allow additional time for eligible material to be returned to the United States and to allow SNF elements from an Australian reactor commissioned after 2005 to replace a reactor currently eligible for the acceptance program and analyzed in the original FRR SNF EIS.

Proposed Action

DOE and the U.S. Department of State propose to revise the FRR SNF Acceptance Program by:

- Extending the expiration date for irradiation of eligible spent for 10 years, from May 12, 2006, to May 12, 2016;
- Extending the acceptance date for eligible spent fuel 10 years, from May 12, 2009, to May 12, 2019; and
- Extending eligibility to Australia's RRR for participation in the Acceptance Program.

The amount of potentially eligible SNF would remain at approximately 20 metric tonnes of heavy metal total.

Target material (fuel for isotope production such as Technetium-99) and damaged spent fuel also received under the Acceptance Program currently can be treated in H–Canyon at SRS. However, current plans call for H–Canyon facilities to be maintained in operable condition through 2010 pending a review of the facility. While target material and damaged SNF can be accepted under the current Acceptance Policy, the material would not be accepted if H–Canyon is unavailable after 2010 to prepare the target material and damaged fuel for disposal. If SNF were to be damaged once it arrived in the United States and H–Canyon were not available, DOE would repackage or otherwise prepare the fuel and safely store it pending disposal.

NEPA Review

DOE prepared a Supplement Analysis in accordance with DOE NEPA implementing regulations (10 CFR part 1021) to determine whether a supplement to the FRR SNF EIS is needed for the proposed action. The analysis evaluated the potential health and environmental impacts of extending the program for 5 and 10 years, and of including the small number of additional fuel elements from the RRR. The analysis concluded that although there could be very small increases in health impacts such as from SNF transportation over the extended period, these increases would not significantly change the results reported in the FRR SNF EIS. Accordingly, DOE has determined that there are no substantial changes to the proposed action analyzed in the FRR SNF EIS or significant new circumstances or information relevant to environmental concerns resulting from the extension of the Acceptance Policy. As referenced in the Supplement Analysis, the onsite management of SNF at INEEL and SRS was addressed in the Programmatic SNF and INEEL Final EIS (DOE/EIS–0203, Volumes 1 and 2, 1995) and the Savannah River Site Spent Fuel

Management Final EIS (DOE/EIS–0279, 2000). The onsite impacts identified for those sites would not be changed by the extension of the Acceptance Policy. Transportation impacts from INEEL and SRS to the geologic repository as analyzed in the Final EIS for a *Geologic Repository for the Disposal of Spent Nuclear Fuel and High-level Radioactive Waste at Yucca Mountain, Nye, County, Nevada,* (DOE/EIS–250, 2002) are also unchanged by the extension.

Decision

DOE has decided to extend the FRR SNF Acceptance Policy for an additional 10 years beyond its current expiration, until May 12, 2016, for irradiation of eligible fuel, and until May 12, 2019, for fuel acceptance. DOE has also decided to include the Australian RRR as a reactor eligible to participate in the acceptance program. For the small amount of RRR fuel that would be added to 1996 estimates, DOE will continue limitations on shipment cask curie activity and will ensure that the upper limit estimate for the source term assumed in the FRR SNF EIS accident analysis will not be exceeded.

DOE's decision furthers the nonproliferation objectives of the United States. The extension of the Acceptance Policy is expected to provide sufficient time for reactors to complete their planned shipments, to complete development, testing, qualification and fabrication of new LEU fuels which could be used by the RRR and other reactors, and to provide time for reactors to convert to the new LEU fuels or make alternative fuel management arrangements.

Issued in Washington, DC on November 22, 2004.

Linton F. Brooks,

Under Secretary and Administrator, National Nuclear Security Administration.

[FR Doc. 04–26470 Filed 11–30–04; 8:45 am]

BILLING CODE 6450–01–P

DEPARTMENT OF ENERGY

Environmental Management Site-Specific Advisory Board, Paducah

AGENCY: Department of Energy (DOE).

ACTION: Notice of open meeting.

SUMMARY: This notice announces a meeting of the Environmental Management Site-Specific Advisory Board (EMSSAB), Paducah. The Federal Advisory Committee Act (Pub. L. 92–463, 86 Stat. 770) requires that public notice of this meeting be announced in the **Federal Register**.

DATES: Thursday, January 20, 2005—5:30 p.m.–9:30 p.m.

ADDRESSES: 111 Memorial Drive, Barkley Centre, Paducah, Kentucky 42001.

FOR FURTHER INFORMATION CONTACT: William E. Murphie, Deputy Designated Federal Officer (DDFO), Department of Energy Portsmouth/Paducah Project Office, 1017 Majestic Drive, Suite 200, Lexington, Kentucky 40513, (859) 219–4001.

SUPPLEMENTARY INFORMATION:

Purpose of the Board: The purpose of the Board is to make recommendations to DOE in the areas of environmental restoration, waste management and related activities.

Tentative Agenda

5:30 p.m. Informal Discussion
6 p.m. Call to Order
Introduction
Review of Agenda
Approval of November Minutes
6:05 p.m. DDFO's Comments
6:25 p.m. Federal Coordinator Comments
6:30 p.m. Ex-Officio Comments
6:40 p.m. Public Comments and Questions
7:50 p.m. Task Forces/Presentations
- Waste Disposition Task Force
—Burial Ground Operable Unit
- Water Quality Task Force
- Long Range Strategy/Stewardship Task Force
—Annual Report
—Site Management Plan Update
- Waste Community Outreach Task Force

7 p.m. Public Comments and Questions
8 p.m. Break
8:15 p.m. Administrative Issues
- Review of Work Plan
- Review of Next Agenda

8:20 p.m. Review of Action Items
8:25 p.m. Subcommittee Reports
- Executive Committee

8:40 p.m. Final Comments
9:30 p.m. Adjourn

Copies of the final agenda will be available at the meeting.

Public Participation: The meeting is open to the public. Written statements may be filed with the Committee either before or after the meeting. Individuals who wish to make oral statements pertaining to agenda items should contact David Dollins at the address listed below or by telephone at (270) 441–6819. Requests must be received five days prior to the meeting and reasonable provision will be made to include the presentation in the agenda. The Deputy Designated Federal Officer is empowered to conduct the meeting in a fashion that will facilitate the orderly conduct of business. Individuals wishing to make public comments will be provided a maximum of five minutes to present their comments as the first item of the meeting agenda.

Minutes: The minutes of this meeting will be available for public review and copying at the Freedom of Information Public Reading Room, 1E–190, Forrestal Building, 1000 Independence Avenue, SW., Washington, DC 20585 between 9 a.m. and 4 p.m., Monday–Friday, except Federal holidays. Minutes will also be available at the Department of Energy's Environmental Information Center and Reading Room at 115 Memorial Drive, Barkley Centre, Paducah, Kentucky between 8 a.m. and 5 p.m., on Monday thru Friday or by writing to David Dollins, Department of Energy, Paducah Site Office, Post Office Box 1410, MS–103, Paducah, Kentucky 42001 or by calling him at (270) 441–6819.

Issued at Washington, DC, on November 24, 2004.

Rachel M. Samuel,

Deputy Advisory Committee Management Officer.

[FR Doc. 04–26469 Filed 11–30–04; 8:45 am]

BILLING CODE 6450–01–P

DEPARTMENT OF ENERGY

Federal Energy Regulatory Commission

[Docket No. CP05–18–000]

Equitrans, L.P.; Notice of Proceeding

November 23, 2004.

Take notice that on November 18, 2004, in an order issued in Docket Nos. RP04–97–001, *et al.*, the Commission established a separate proceeding to conduct an inquiry in response to assertions by Equitrans, L.P. (Equitrans), 100 Allegany Center, Pittsburgh, PA 15275, that a significant portion of its storage facilities' cushion gas has been lost due to migration of that gas. The proceeding in Docket No. CP05–18–000, initiated by the Commission pursuant to its authority under section 5, 7, 8 and 16 of the Natural Gas Act (NGA), will explore material issues regarding Equitrans' loss of the cushion gas, as described in more detail herein.

In the rate proceeding in Docket Nos. RP04–97–001, *et al.*, Equitrans explained its intention to buy and inject into storage approximately 9,600,000 Dth of cushion gas to replace lost cushion gas. Equitrans proposed in the rate proceeding to reflect the projected purchase cost of this cushion gas of approximately $49.1 million in its rates.

In the November 18, 2004, order in Docket Nos. RP04–97–001, *et al.*, the Commission observed that the loss of such a significant volume of cushion gas raises operational and other issues, in particular whether Equitrans' storage operations and facilities are meeting Equitrans' certificated service obligations under section 7 of the NGA. The Commission found that it should review Equitrans' operation of its storage facilities prior to Equitrans' being permitted to purchase and inject more cushion gas into the storage system.

Accordingly, in Docket No. CP05–18–000, the Commission will convene a technical conference to initiate an inquiry regarding Equitrans' assertion that it has lost cushion gas due to migration and the effects any such migration has on its storage operations. The Commission will issue a further notice establishing the date for the technical conference, which will be conducted after the due date for motions to intervene in Docket No. CP05–18–000. At the technical conference, Equitrans shall present data and information to support its assertion that cushion gas has migrated from its storage facilities and to demonstrate the effects any such migration has on its storage operations. Equitrans also shall present its plan for implementing measures to ensure that its storage facilities can continue to operate without further gas loss within the defined geological parameters and without further reservoir or buffer expansion. Following the technical conference, the Commission will issue further procedural notices as needed.

Any person desiring to be heard in this proceeding should file a motion to intervene with the Federal Energy Regulatory Commission, 888 First Street, NE., Washington, DC 20426, in accordance with sections 385.214 of the Commission's Rules and Regulations. All such motions must be filed on or before December 2, 2004. Attendance at the technical conference will be limited to persons that file timely motions to intervene.

Any comments filed in this proceeding will be considered by the Commission in determining the appropriate action to be taken, but will not serve to make the commenters parties to the proceeding. Any person wishing to become a party must file a motion to intervene. Any motions to intervene, data requests, responses to data requests, comments or any other document filed in this proceeding will be available for review at the Commission in the Public Reference Room or may be viewed on the Commission's Web site at *http://www.ferc.gov* using the ''eLibrary''. Enter the docket number excluding the last three digits in the docket number field to access the document. For assistance, please contact FERC Online Support at *FERCOnlineSupport@ferc.gov* or toll-free at (866) 208–3676, or TTY, contact (202) 502–8659. The Commission strongly encourages electronic filings. *See* 18 CFR 385.2001(a) (1) (iii) and the instructions on the Commission's Web site under the ''e-Filing'' link.

Intervention Date: December 2, 2004.

Magalie R. Salas,

Secretary.

[FR Doc. E4–3399 Filed 11–30–04; 8:45 am]

BILLING CODE 6717–01–P

DEPARTMENT OF ENERGY

Federal Energy Regulatory Commission

[Docket No. RP05–74–000]

Gulf South Pipeline Company, LP; Notice of Proposed Changes to FERC Gas Tariff

November 23, 2004.

Take notice that on November 17, 2004, Gulf South Pipeline Company, LP (Gulf South) tendered for filing as part of its FERC Gas Tariff, Sixth Revised Volume No. 1, the following tariff sheets, to become effective December 17, 2004:

First Revised Sheet No. 3700
First Revised Sheet No. 3703

Gulf South is proposing certain changes to its contractual ROFR provisions.

Gulf South states that copies of this filing have been served upon Gulf South's customers, state commissions and other interested parties.

Any person desiring to intervene or to protest this filing must file in accordance with Rules 211 and 214 of the Commission's Rules of Practice and Procedure (18 CFR 385.211 and 385.214). Protests will be considered by the Commission in determining the appropriate action to be taken, but will not serve to make protestants parties to the proceeding. Any person wishing to become a party must file a notice of intervention or motion to intervene, as appropriate. Such notices, motions, or protests must be filed in accordance with the provisions of Section 154.210 of the Commission's regulations (18 CFR 154.210). Anyone filing an intervention or protest must serve a copy of that document on the Applicant. Anyone filing an intervention or protest on or before the intervention or protest date need not serve motions to intervene or protests on persons other than the Applicant.

The Commission encourages electronic submission of protests and interventions in lieu of paper using the ''eFiling'' link at *http://www.ferc.gov*. Persons unable to file electronically should submit an original and 14 copies of the protest or intervention to the Federal Energy Regulatory Commission, 888 First Street, NE., Washington, DC 20426.

This filing is accessible on-line at *http://www.ferc.gov*, using the ''eLibrary'' link and is available for review in the Commission's Public Reference Room in Washington, DC. There is an ''eSubscription'' link on the Web site that enables subscribers to receive e-mail notification when a document is added to a subscribed docket(s). For assistance with any FERC Online service, please e-mail *FERCOnlineSupport@ferc.gov*, or call (866) 208–3676 (toll free). For TTY, call (202) 502–8659.

Magalie R. Salas,

Secretary.

[FR Doc. E4–3390 Filed 11–30–04; 8:45 am]

BILLING CODE 6717–01–P

DEPARTMENT OF ENERGY

Federal Energy Regulatory Commission

[Docket No. ER04–1244–000]

NorthPoint Energy Solutions Inc.; Notice of Issuance of Order

November 23, 2004.

NorthPoint Energy Solutions Inc. (NorthPoint) filed an application for market-based rate authority, with an accompanying tariff. The proposed tariff provides for wholesale sales of energy and capacity at market-based rates. NorthPoint also requested waiver of various Commission regulations. In particular, NorthPoint requested that the Commission grant blanket approval under 18 CFR Part 34 of all future issuances of securities and assumptions of liability by NorthPoint.

On November 19, the Commission granted the request for blanket approval under Part 34, subject to the following:

[A]ny person desiring to be heard or to protest the blanket approval of issuances of securities or assumptions of liability by NorthPoint should file a motion to intervene or protest with the Federal Energy Regulatory Commission, 888 First Street, NE., Washington, DC 20426, in accordance with Rules 211

and 214 of the Commission's Rules of Practice and Procedure. 18 CFR 385.211, 385.214 (2004).

NorthPoint Energy Solutions, Inc., 109 FERC ¶ 61,178 (2004).

Notice is hereby given that the deadline for filing motions to intervene or protest, is December 20, 2004.

Absent a request to be heard in opposition by the deadline above, NorthPoint is authorized to issue securities and assume obligations or liabilities as a guarantor, indorser, surety, or otherwise in respect of any security of another person; provided that such issuance or assumption is for some lawful object within the corporate purposes of NorthPoint, compatible with the public interest, and is reasonably necessary or appropriate for such purposes.

The Commission reserves the right to require a further showing that neither public nor private interests will be adversely affected by continued approval of NorthPoint's issuances of securities or assumptions of liability.

Copies of the full text of the Commission's Order are available from the Commission's Public Reference Room, 888 First Street, NE., Washington, DC 20426. The Order may also be viewed on the Commission's Web site at *http://www.ferc.gov*, using the eLibrary link. Enter the docket number excluding the last three digits in the docket number filed to access the document. Comments, protests, and interventions may be filed electronically via the internet in lieu of paper. See, 18 CFR 385.2001(a)(1)(iii) and the instructions on the Commission's web site under the ''e-Filing'' link. The Commission strongly encourages electronic filings.

Magalie R. Salas,

Secretary.

[FR Doc. E4–3392 Filed 11–30–04; 8:45 am]

BILLING CODE 6717–01–P

DEPARTMENT OF ENERGY

Federal Energy Regulatory Commission

[Docket No. ER05–41–000]

Oasis Power Partners, LLC; Notice of Issuance of Order

November 23, 2004.

Oasis Power Partners, LLC (Oasis) filed an application for market-based rate authority, with an accompanying rate schedule. The proposed rate schedule provides for wholesale sales of energy, capacity and ancillary services at market-based rates. Oasis also requested waiver of various Commission regulations. In particular, Oasis requested that the Commission grant blanket approval under 18 CFR Part 34 of all future issuances of securities and assumptions of liability by Oasis.

On November 19, the Commission granted the request for blanket approval under Part 34, subject to the following:

[A]ny person desiring to be heard or to protest the blanket approval of issuances of securities or assumptions of liability by Oasis should file a motion to intervene or protest with the Federal Energy Regulatory Commission, 888 First Street, NE., Washington, DC 20426, in accordance with Rules 211 and 214 of the Commission's Rules of Practice and Procedure. 18 CFR 385.211, 385.214 (2004).

Oasis Power Partners, LLC, 109 FERC ¶ 61,180 (2004).

Notice is hereby given that the deadline for filing motions to intervene or protest, is December 20, 2004.

Absent a request to be heard in opposition by the deadline above, Oasis is authorized to issue securities and assume obligations or liabilities as a guarantor, indorser, surety, or otherwise in respect of any security of another person; provided that such issuance or assumption is for some lawful object within the corporate purposes of Oasis, compatible with the public interest, and is reasonably necessary or appropriate for such purposes.

The Commission reserves the right to require a further showing that neither public nor private interests will be adversely affected by continued approval of Oasis' issuances of securities or assumptions of liability.

Copies of the full text of the Commission's Order are available from the Commission's Public Reference Room, 888 First Street, NE., Washington, DC 20426. The Order may also be viewed on the Commission's Web site at *http://www.ferc.gov*, using the eLibrary link. Enter the docket number excluding the last three digits in the docket number filed to access the document. Comments, protests, and interventions may be filed electronically via the internet in lieu of paper. See, 18 CFR 385.2001(a)(1)(iii) and the instructions on the Commission's Web site under the ''e-Filing'' link. The Commission strongly encourages electronic filings.

Magalie R. Salas,

Secretary.

[FR Doc. E4–3394 Filed 11–30–04; 8:45 am]

BILLING CODE 6717–01–P

DEPARTMENT OF ENERGY

Federal Energy Regulatory Commission

[Docket Nos. CP05–25–000; CP05–26–000; CP05–27–000; CP05–28–000]

Seafarer U.S. Pipeline System, Inc.; Notice of Filing

November 23, 2004.

Take notice that on November 16, 2004, Seafarer U.S. Pipeline System, Inc. (Seafarer), 1001 Louisiana Street, Houston, Texas 77002, filed an application, in Docket Nos. CP05–25–000, *et al.*, pursuant to section 7 of the Natural Gas Act (NGA), as amended, and Parts 157 and 284 of the Commission's Rules and Regulations, for: (i) A certificate of public convenience and necessity authorizing Seafarer to construct, own, and operate a new natural gas pipeline under Part 157, Subpart A; (ii) a blanket certificate authorizing Seafarer to self-implement routine activities, including construction, acquisition, operation, or abandonment of certain facilities under Part 157, Subpart F; and (iii) a blanket certificate authorizing Seafarer to transport natural gas, on an open access and self-implementing basis, under Part 284, Subpart G.

Concurrently, in a separate filing, Docket No. CP05–28–000, Seafarer filed an application pursuant to section 3 of the NGA and Part 153 of the Commission's Rules and Regulations, and also request for a Presidential Permit for importing and transporting natural gas from a proposed interconnection at the US/Bahamian Exclusive Economic Zone (EEZ) boundary with a proposed Bahamian pipeline connected to the proposed High Rock LNG terminal located at South Riding Point on Grand Bahama Island.

The applications are on file with the Commission and open for public inspection. These filings are available for review at the Commission in the Public Reference Room or may be viewed on the Commission's Web site at *http://www.ferc.gov* using the ''eLibrary'' link. Enter the docket number excluding the last three digits in the docket number field to access the document. For assistance, please contact FERC Online Support at *FERCOnlineSupport@ferc.gov* or toll free at (866)208–3676, or for TTY, contact (202) 502–8659. Any questions regarding the applications are to be directed to Howard L. Nelson, El Paso Corporation, 555 11th Street, NW., Suite 750, Washington, DC, 20004.

The proposed pipeline will consist of approximately 41 miles of 26-inch diameter pipeline extending from the receipt point at the EEZ boundary to an interconnection with existing facilities of Florida Gas Transmission Company (FGT) in Palm Beach County, Florida. From the EEZ boundary, the pipeline will extend underwater approximately 35 miles and make landfall at Florida Power & Light Company's power plant site in Riviera Beach. The pipeline will continue onshore approximately six miles along existing utility, roadway and railway corridors to the FGT interconnection point. The proposed pipeline will transport up to 800,000 Dth per day from the proposed High Rock LNG terminal to gas-consuming markets in Florida and other Southeastern states.

There are two ways to become involved in the Commission's review of this project. First, any person wishing to obtain legal status by becoming a party to the proceedings for this project should, on or before the below listed comment date, file with the Federal Energy Regulatory Commission, 888 First Street, NE, Washington, D.C. 20426, a motion to intervene in accordance with the requirements of the Commission's Rules of Practice and Procedure (18 CFR 385.214 or 385.211) and the Regulations under the NGA (18 CFR 157.10). A person obtaining party status will be placed on the service list maintained by the Secretary of the Commission and will receive copies of all documents filed by the applicant and by all other parties. A party must submit 14 copies of filings made with the Commission and must mail a copy to the applicant and to every other party in the proceeding. Only parties to the proceeding can ask for court review of Commission orders in the proceeding.

However, a person does not have to intervene in order to have comments considered. The second way to participate is by filing with the Secretary of the Commission, as soon as possible, an original and two copies of comments in support of or in opposition to this project. The Commission will consider these comments in determining the appropriate action to be taken, but the filing of a comment alone will not serve to make the filer a party to the proceeding. The Commission's rules require that persons filing comments in opposition to the project provide copies of their protests only to the party or parties directly involved in the protest.

Persons who wish to comment only on the environmental review of this project should submit an original and two copies of their comments to the Secretary of the Commission. Environmental commenters will be placed on the Commission's environmental mailing list, will receive copies of the environmental documents, and will be notified of meetings associated with the Commission's environmental review process.

Environmental commenters will not be required to serve copies of filed documents on all other parties. However, the non-party commenters will not receive copies of all documents filed by other parties or issued by the Commission (except for the mailing of environmental documents issued by the Commission) and will not have the right to seek court review of the Commission's final order.

The Commission may issue a preliminary determination on non-environmental issues prior to the completion of its review of the environmental aspects of the project. This preliminary determination typically considers such issues as the need for the project and its economic effect on existing customers of the applicant, on other pipelines in the area, and on landowners and communities. For example, the Commission considers the extent to which the applicant may need to exercise eminent domain to obtain rights-of-way for the proposed project and balances that against the non-environmental benefits to be provided by the project. Therefore, if a person has comments on community and landowner impacts from this proposal, it is important either to file comments or to intervene as early in the process as possible.

Motions to intervene, protests and comments may be filed electronically via the internet in lieu of paper; see, 18 CFR 385.2001(a)(1)(iii) and the instructions on the Commission's Web site under the ''e-Filing'' link. The Commission strongly encourages electronic filings.

Comment Date: December 14, 2004.

Magalie R. Salas,

Secretary.

[FR Doc. E4–3391 Filed 11–30–04; 8:45 am]

BILLING CODE 6717–01–P

DEPARTMENT OF ENERGY

Federal Energy Regulatory Commission

[Docket No. ER04–1251–000]

Styrka Energy Master Fund LLC; Notice of Issuance of Order

November 23, 2004.

Styrka Energy Master Fund LLC (SEMF) filed an application for market-based rate authority, with an accompanying rate schedule. The proposed rate schedule provides for wholesale sales of energy and capacity at market-based rates. SEMF also requested waiver of various Commission regulations. In particular, SEMF requested that the Commission grant blanket approval under 18 CFR part 34 of all future issuances of securities and assumptions of liability by SEMF.

On November 22, the Commission granted the request for blanket approval under Part 34, subject to the following:

[A]ny person desiring to be heard or to protest the blanket approval of issuances of securities or assumptions of liability by SEMF should file a motion to intervene or protest with the Federal Energy Regulatory Commission, 888 First Street, NE., Washington, DC 20426, in accordance with Rules 211 and 214 of the Commission's Rules of Practice and Procedure. 18 CFR 385.211, 385.214 (2004).

Styrka Energy Master Fund LLC, 109 FERC ¶ 61,199 (2004)

Notice is hereby given that the deadline for filing motions to intervene or protest, is December 22, 2004.

Absent a request to be heard in opposition by the deadline above, SEMF is authorized to issue securities and assume obligations or liabilities as a guarantor, indorser, surety, or otherwise in respect of any security of another person; provided that such issuance or assumption is for some lawful object within the corporate purposes of SEMF, compatible with the public interest, and is reasonably necessary or appropriate for such purposes.

The Commission reserves the right to require a further showing that neither public nor private interests will be adversely affected by continued approval of SEMF's issuances of securities or assumptions of liability.

Copies of the full text of the Commission's Order are available from the Commission's Public Reference Room, 888 First Street, NE., Washington, DC 20426. The Order may also be viewed on the Commission's Web site at *http://www.ferc.gov*, using the eLibrary link. Enter the docket

number excluding the last three digits in the docket number filed to access the document. Comments, protests, and interventions may be filed electronically via the internet in lieu of paper. See, 18 CFR 385.2001(a)(1)(iii) and the instructions on the Commission's Web site under the ''e-Filing'' link. The Commission strongly encourages electronic filings.

Magalie R. Salas,

Secretary.

[FR Doc. E4–3393 Filed 11–30–04; 8:45 am]

BILLING CODE 6717–01–P

DEPARTMENT OF ENERGY

Federal Energy Regulatory Commission

[Docket No. RP05–14–001]

Transwestern Pipeline Company, LLC; Notice of Correction

November 23, 2004.

Take notice that on November 16, 2004, Transwestern Pipeline Company, LLC (Transwestern) notified the Commission that the effective date of its conversion from a corporation to a limited liability company and its name change from Transwestern Pipeline Company to Transwestern Pipeline Company, LLC is November 16, 2004. Transwestern explains that, in its filing dated October 1, 2004 in Docket No. RP05–14–000, in the event the proposed conversion and name change were not completed by November 1, 2004, Transwestern would advise the Commission of the correct effective date to coincide with the actual date of conversion. Transwestern states that this letter serves as such notification that the effective date of Transwestern's Tariff, Third Revised Volume No. 1, is November 16, 2004.

Any person desiring to intervene or to protest this filing must file in accordance with Rules 211 and 214 of the Commission's Rules of Practice and Procedure (18 CFR 385.211 and 385.214). Protests will be considered by the Commission in determining the appropriate action to be taken, but will not serve to make protestants parties to the proceeding. Any person wishing to become a party must file a notice of intervention or motion to intervene, as appropriate. Such notices, motions, or protests must be filed in accordance with the provisions of Section 154.210 of the Commission's regulations (18 CFR 154.210). Anyone filing an intervention or protest must serve a copy of that document on all parties to this proceeding.

The Commission encourages electronic submission of protests and interventions in lieu of paper using the ''eFiling'' link at *http://www.ferc.gov*. Persons unable to file electronically should submit an original and 14 copies of the protest or intervention to the Federal Energy Regulatory Commission, 888 First Street, NE., Washington, DC 20426.

This filing is accessible on-line at *http://www.ferc.gov*, using the ''eLibrary'' link and is available for review in the Commission's Public Reference Room in Washington, DC. There is an ''eSubscription'' link on the Web site that enables subscribers to receive e-mail notification when a document is added to a subscribed docket(s). For assistance with any FERC Online service, please e-mail *FERCOnlineSupport@ferc.gov*, or call (866) 208–3676 (toll free). For TTY, call (202) 502–8659.

Magalie R. Salas,

Secretary.

[FR Doc. E4–3398 Filed 11–30–04; 8:45 am]

BILLING CODE 6717–01–P

DEPARTMENT OF ENERGY

Federal Energy Regulatory Commission

[Project No. 459–128]

Union Electric Company, d/b/a AmerenUE; Notice Soliciting Comments and Final Recommendations, Terms and Conditions, and Prescriptions

November 23, 2004.

Take notice that the following hydroelectric application and applicant-prepared environmental assessment has been filed with the Commission and is available for public inspection.

a. *Type of Application:* New major license.

b. *Project No.:* 459–128.

c. *Date Filed:* February 24, 2004.

d. *Applicant:* Union Electric Company (d/b/a AmerenUE).

e. *Name of Project:* Osage Hydroelectric Project.

f. *Location:* On the Osage River, in Benton, Camden, Miller and Morgan Counties, central Missouri. The project occupies 1.6 acres of Federal land.

g. *Filed Pursuant to:* Federal Power Act, 16 U.S.C. 791(a)–825(r).

h. *Applicant Contact:* Mr. Jerry Hogg, Superintendent Hydro Regulatory Compliance, AmerenUE, 617 River Road, Eldon, MO 65026; Telephone (573) 365–9315; e-mail *jhogg@ameren.com*.

i. *FERC Contact:* Allan Creamer at (202) 502–8365; or e-mail at *allan.creamer@ferc.gov*.

j. Deadline for filing comments and final recommendations, terms and conditions, and prescriptions is 60 days from the issuance of this notice; reply comments are due 105 days from the issuance date of this notice.

All documents (original and eight copies) should be filed with: Magalie R. Salas, Secretary, Federal Energy Regulatory Commission, 888 First Street, NE., Washington, DC 20426. Comments, recommendations, terms and conditions, and prescriptions may be filed electronically via the Internet in lieu of paper; *see* 18 CFR 385.2001(a)(1)(iii) and the instructions on the Commission's Web site (*http://www.ferc.gov*) under the ''e-Filing'' link. The Commission strongly encourages electronic filing.

The Commission's Rules of Practice require all intervenors filing documents with the Commission to serve a copy of that document on each person on the official service list for the project. Further, if an intervenor files comments or documents with the Commission relating to the merits of an issue that may affect the responsibilities of a particular resource agency, they must also serve a copy of the document on that resource agency.

k. This application has been accepted for filing.

l. *Project Description:* The existing project consists of: (1) A 2,543-foot-long, 148-foot-high dam comprised of, from right to left, (i) a 1,181-foot-long, non-overflow section, (ii) a 520-foot-long gated spillway section, (iii) a 511-foot-long intake works and powerhouse section, and (iv) a 331-foot-long non-overflow section; (2) an impoundment (Lake of the Ozarks), approximately 93 miles in length, covering 54,000 acres at a normal full pool elevation of 660 feet mean sea level; (3) a powerhouse, integral with the dam, containing eight main generating units (172 MW) and two auxiliary units (2.1 MW each), having a total installed capacity of 176.2 MW; and (4) appurtenant facilities. The project generates an average of 636,397 megawatt-hours of electricity annually.

AmerenUE currently operates, and is proposing to continue to operate, the Osage Project as a peaking and load regulation facility. AmerenUE proposes to upgrade two of the facility's eight main generating units and the two smaller, auxiliary generating units. With the proposed upgraded units, energy generation is estimated to increase by about 5.6 percent. In addition to the physical plant upgrades, AmerenUE

proposes a variety of environmental and recreation measures.

m. A copy of the application is available for review at the Commission in the Public Reference Room or may be viewed on the Commission's website at *http://www.ferc.gov* using the ''eLibrary'' link. Enter the docket number, excluding the last three digits in the docket number field (P–459), to access the document. For assistance, contact FERC Online Support at *FERCOnlineSupport@ferc.gov* or toll-free at 1–866–208–3676, or for TTY, (202) 502–8659. A copy is also available for inspection and reproduction at the address in item h above.

n. Anyone may submit comments on this application. In determining the appropriate action to take, the Commission will consider all comments filed. Comments must be received on or before the specified deadline date for comments identified in paragraph j above.

All filings must: (1) Bear in all capital letters the title ''COMMENTS,'' ''REPLY COMMENTS,'' ''RECOMMENDATIONS,'' ''TERMS AND CONDITIONS,'' or ''PRESCRIPTIONS;'' (2) set forth in the heading the name of the applicant and the project number of the application to which the filing responds; (3) furnish the name, address, and telephone number of the agency or other individual submitting the filing; and (4) otherwise comply with the requirements of 18 CFR 385.2001 through 385.2005. All comments, recommendations, terms and conditions or prescriptions must set forth their evidentiary basis and otherwise comply with the requirements of 18 CFR 4.34(b). Agencies may obtain copies of the application directly from the applicant. Each filing must be accompanied by proof of service on all persons listed on the service list prepared by the Commission in this proceeding, in accordance with 18 CFR 4.34(b) and 385.2010.

You may also register online at *http://www.ferc.gov/docs-filing/esubscription.asp* to be notified via e-mail of new filings and issuances related to this or other pending projects. For assistance, contact FERC Online Support.

o. The revised tentative schedule for processing the application is as follows:

Milestone	Date
Deadline for Agency Recommendations	January 2005.
Deadline for Reply Comments	March 2005.
Issuance of EA	March/April 2005.
Public Comments on EA due	May/June 2005.
Ready for Commission Decision on the Application	November 2005.

Magalie R. Salas,

Secretary.

[FR Doc. E4–3396 Filed 11–30–04; 8:45 am]

BILLING CODE 6717–01–P

DEPARTMENT OF ENERGY

Federal Energy Regulatory Commission

[Project No. P–2726–012]

Malad Hydroelectric Project; Notice of Meetings

November 23, 2004.

The Commission is scheduled to meet with representatives of the Shoshone-Paiute Tribes of the Duck Valley Indian Reservation and Shoshone-Bannock Tribes of the Fort Hall Indian Reservation involving the Malad Hydroelectric Project (Project No. 2726–012). Meetings will be held with the following tribes at the locations and times listed below:

Shoshone-Paiute Tribes, December 16, 2004, 9 a.m. (m.s.t.); Red Lion Canyon Springs Hotel, Cedar Room, 1357 Blue Lakes Blvd. N., Twin Falls, ID 83301.

Shoshone-Bannock Tribes, December 16, 2004, 3 p.m. (m.s.t.); Fort Hall Indian Reservation, Tribal Conference Room at the Tribal Business Center.

Members of the public and intervenors in the referenced proceedings may attend these meetings; however, participation will be limited to tribal representatives and the Commission representatives. If the Tribes decide to disclose information about a specific location which could create a risk or harm to an archeological site or Native American cultural resource, the public will be excused for that portion of the meeting when such information is disclosed.[1] If you plan to attend any of these meetings, please contact Dr. Frank Winchell at the Federal Energy Regulatory Commission. He can be reached at 202–502–6104. The meetings will be transcribed by a court reporter, and transcripts will be made available by the Commission after the meetings.

Magalie R. Salas,

Secretary.

[FR Doc. E4–3395 Filed 11–30–04; 8:45 am]

BILLING CODE 6717–01–P

DEPARTMENT OF ENERGY

Federal Energy Regulatory Commission

[Docket No. RM98–1–000]

Records Governing Off-the-Record Communications; Public Notice

November 23, 2004.

This constitutes notice, in accordance with 18 CFR 385.2201(b), of the receipt of exempt and prohibited off-the-record communications.

Order No. 607 (64 FR 51222, September 22, 1999) requires Commission decisional employees, who make or receive an exempt or prohibited off-the-record communication relevant to the merits of a contested on-the-record proceeding, to deliver a copy of the communication, if written, or a summary of the substance of any oral communication, to the Secretary.

Prohibited communications will be included in a public, non-decisional file associated with, but not a part of, the decisional record of the proceeding. Unless the Commission determines that the prohibited communication and any responses thereto should become a part of the decisional record, the prohibited off-the-record communication will not be considered by the Commission in reaching its decision. Parties to a proceeding may seek the opportunity to respond to any facts or contentions made in a prohibited off-the-record communication, and may request that the Commission place the prohibited communication and responses thereto in the decisional record. The Commission will grant such a request only when it determines that fairness so requires. Any person identified below as having made a prohibited off-the-record communication shall serve the document on all parties listed on the official service list for the applicable proceeding in accordance with Rule 2010, 18 CFR 385.2010.

[1] Protection from public disclosure involving this kind of specific information is based upon 18 CFR 4.32(b)(3)(ii) of the Commission's regulations implementing the Federal Power Act.

Exempt off-the-record communications will be included in the decisional record of the proceeding, unless the communication was with a cooperating agency as described by 40 CFR 1501.6, made under 18 CFR 385.2201(e)(1)(v).

The following is a list of prohibited and exempt communications recently received in the Office of the Secretary. The communications listed are grouped by docket numbers. These filings are available for review at the Commission in the Public Reference Room or may be viewed on the Commission's Web site at *http://www.ferc.gov* using the eLibrary (FERRIS) link. Enter the docket number excluding the last three digits in the docket number field to access the document. For Assistance, please contact FERC, Online Support at *FERCOnlineSupport@ferc.gov* or toll free at (866) 208–3676, or for TTY, contact (202) 502–8659.

Docket No.	Date filed	Presenter or requester
Prohibited:		
1. OR92–8–000, *et al*	11–2–04	Donald F. Santa, Jr.
Exempt:		
1. ER03–563–030	11–16–04	Honorable M. Jodi Rell.
2. Project No. 11858	11–17–04	Margaret Hangan.

Magalie R. Salas,

Secretary.

[FR Doc. E4–3397 Filed 11–30–04; 8:45 am]

BILLING CODE 6717–01–P

ENVIRONMENTAL PROTECTION AGENCY

[Docket ID Numbers OECA–2004–0041, OECA–2004–0031, OECA–2004–0038, OECA–2004–0048, OECA–2004–0033, OECA–2004–0030, OECA–2004–0049, OECA–2004–0047, OECA–2004–0037, and OECA–2004–0043; FRL–7843–9]

Agency Information Collection Activities: Request for Comments on Ten Proposed Information Collection Requests (ICRs)

AGENCY: Environmental Protection Agency (EPA).

ACTION: Notice.

SUMMARY: In compliance with the Paperwork Reduction Act (44 U.S.C. 3501 *et seq.*), this document announces that EPA is planning to submit the following ten existing, approved, continuing Information Collection Requests (ICR) to the Office of Management and Budget (OMB) for the purpose of renewing the ICRs. Before submitting the ICRs to OMB for review and approval, EPA is soliciting comments on specific aspects of the information collections as described under **SUPPLEMENTARY INFORMATION**.

DATES: Comments must be submitted on or before January 31, 2005.

ADDRESSES: Comments may be submitted electronically, by mail, or through hand delivery/courier service. Follow the detailed instructions as provided under **SUPPLEMENTARY INFORMATION**, section I. B.

FOR FURTHER INFORMATION CONTACT: The contact individuals for each ICR are listed under **SUPPLEMENTARY INFORMATION**, section II. C.

SUPPLEMENTARY INFORMATION:

I. General Information

A. Background

Pursuant to section 3506(c)(2)(A) of the PRA, EPA is soliciting comments and information to enable it to:

(1) Evaluate whether the proposed collections of information are necessary for the proper performance of the functions of the Agency, including whether the information will have practical utility.

(2) Evaluate the accuracy of the Agency's estimates of the burdens of the proposed collections of information.

(3) Enhance the quality, utility, and clarity of the information to be collected.

(4) Minimize the burden of the collections of information on those who are to respond, including through the use of appropriate automated or electronic collection technologies or other forms of information technology, *e.g.*, permitting electronic submission of responses.

Burden means the total time, effort, or financial resources expended by persons to generate, maintain, retain, or disclose or provide information to or for a Federal agency. This includes the time needed to review instructions; develop, acquire, install, and utilize technology and systems for the purposes of collecting, validating, and verifying information, processing and maintaining information, and disclosing and providing information; adjust the existing ways to comply with any previously applicable instructions and requirements; train personnel to be able to respond to a collection of information; search data sources; complete and review the collection of information; and transmit or otherwise disclose the information.

An agency may not conduct or sponsor, and a person is not required to respond to, a collection of information unless it displays a currently valid OMB control number. The OMB control numbers for EPA's standards are displayed at 40 CFR part 9.

B. Public Dockets

EPA has established official public dockets for the ICRs listed under **SUPPLEMENTARY INFORMATION**, section II. B. The official public docket for each ICR consists of the documents specifically referenced in the ICR, any public comments received, and other information related to each ICR. The official public docket for each ICR is the collection of materials that is available for public viewing at the Enforcement and Compliance Docket and Information Center in the EPA Docket Center (EPA/DC), EPA West, Room B102, 1301 Constitution Avenue, NW., Washington, DC. The EPA Docket Center Public Reading Room is open from 8:30 a.m. to 4:30 p.m., Monday through Friday, excluding legal holidays. The telephone number for the Reading Room is (202) 566–1744, and the telephone number for the Enforcement and Compliance Docket and Information Center Docket is (202) 566–1514. An electronic version of the public docket for each ICR is available through EPA Dockets (EDOCKET) at: *http://www.epa.gov/edocket*. Use EDOCKET to obtain a copy of the draft collection of information, to submit or to view public comments, to access the index listing of the contents of the public docket, and to access those documents in the public docket that are available electronically. When in the system, select ''search,'' then key in the docket ID number identified above.

Any comments related to the listed ICRs above should be submitted to EPA within 60 days of this notice. EPA's policy is that public comments, whether submitted electronically or in paper, will be made available for public viewing in EDOCKET as EPA receives them and without change, unless the

comment contains copyrighted material, Confidential Business Information (CBI), or other information whose public disclosure is restricted by statute. When EPA identifies a comment containing copyrighted material, EPA will provide a reference to that material in the version of the comment that is placed in EDOCKET. The entire printed comment, including the copyrighted material, will be available in the public docket. Although identified as an item in the official docket, information claimed as CBI, or whose disclosure is otherwise restricted by statute, is not included in the official public docket, and will not be available for public viewing in EDOCKET. For further information about the electronic docket, see EPA's **Federal Register** notice describing the electronic docket at 67 FR 38102 (May 31, 2002), or go to *http://www.epa.gov/edocket*.

II. ICRs To Be Renewed

A. For All ICRs

The listed ICRs address Clean Air Act information collection requirements in standards (*i.e.*, regulations) which have mandatory recordkeeping and reporting requirements. Records collected under the New Source Performance Standards (NSPS) must be retained by the owner or operator for at least two years and the records collected under the National Emission Standards for Hazardous Air Pollutants (NESHAP) must be retained by the owner or operator for at least five years. In general, the required collections consist of emissions data and other information deemed not to be private.

In the absence of such information collection requirements, enforcement personnel would be unable to determine whether the standards are being met on a continuous basis, as required by the Clean Air Act.

The Agency computed the burden for each of the recordkeeping and reporting requirements applicable to the industry for the currently approved Information Collection Requests (ICRs) listed in this notice. Where applicable, the Agency identified specific tasks and made assumptions, while being consistent with the concept of the Paperwork Reduction Act.

B. List of ICRs Planned To Be Submitted

In compliance with the Paperwork Reduction Act (44 U.S.C. 3501 *et seq.*), this notice announces that EPA is planning to submit the following ten proposed Information Collection Requests (ICR) to the Office of Management and Budget (OMB):

(1) NESHAP for Engine Test Cells/Stands (40 CFR part 63, subpart PPPPP); Docket ID Number OECA–2004–0041; EPA ICR Number 2066.03; OMB Control Number 2060–0483; expiration date July 31, 2005.

(2) NESHAP for Friction Materials Manufacturing (40 CFR part 63, subpart OOOO); Docket ID Number OECA–2004–0031; EPA ICR Number 2025.03; OMB Control Number 2060–0481; expiration date July 31, 2005.

(3) NESHAP for Oil and Natural Gas Production (40 CFR part 63, subpart HH); Docket ID Number OECA–2004–0038; EPA ICR Number 1788.04; OMB Control Number 2060–0417; expiration date August 31, 2005.

(4) NESHAP for Carbon Black, Ethylene, Cyanide and Spandex (40 CFR part 63, subpart YY); Docket ID Number OECA–2004–0048; EPA ICR Number 1983.03; OMB Control Number 2060–0489; expiration date August 31, 2005.

(5) NESHAP for Metal Coil Surface Coating Plants (40 CFR part 63, subpart SSSS); Docket ID Number OECA–2004–0033; EPA ICR Number 1957.03; OMB Control Number 2060–0487; expiration date August 31, 2005.

(6) NESHAP for Cellulose Products Manufacturing (40 CFR part 63, subpart UUUU); Docket ID Number OECA–2004–0030; EPA ICR Number 1974.03; OMB Control Number 2060–0488; expiration date August 31, 2005.

(7) Consolidated Federal Air Rule for SOCMI (40 CFR part 60, subparts A, BB, Ka, Kb, VV, DDD, III, NNN, and RRR; 40 CFR part 61 subparts BB, Y, and V; 40 CFR part 63, subparts F, G, H and I; 40 CFR part 65 subparts A, B, C, D, E, F, and G); Docket ID Number OECA–2004–0049; EPA ICR Number 1854.04; OMB Control Number 2060–0443; expiration date August 31, 2005.

(8) NESHAP for Polyether Polyols Production (40 CFR part 63, subpart PPP); Docket ID Number OECA–2004–0047; EPA ICR Number 1811.04; OMB Control Number 2060–0415; expiration date September 30, 2005.

(9) NESHAP for Natural Gas Transmission and Storage (40 CFR part 63, subpart HHH); Docket ID Number OECA–2004–0037; EPA ICR Number 1789.04; OMB Control Number 2060–0418; expiration date September 30, 2005.

(10) NSPS for Metallic Mineral Processing Plants (40 CFR part 60, subpart LL); Docket ID Number OECA–2004–0043; EPA ICR Number 0982.08; OMB Control Number 2060–0016; expiration date September 30, 2005.

C. Contact Individuals for ICRs

(1) NESHAP for Engine Test Cells/Stands (40 CFR part 63, subpart PPPPP); Learia Williams of the Office of Compliance at (202) 564–4113 or via e-mail to: *williams.learia@epa.gov*; EPA ICR Number 2066.03; OMB Control Number 2060–0483; expiration date July 31, 2005.

(2) NESHAP for Friction Materials Manufacturing (40 CFR part 63, subpart OOOO); Learia Williams of the Office of Compliance at (202) 564–4113 or via e-mail to: *williams.learia@epa.gov*; EPA ICR Number 2025.03; OMB Control Number 2060–0481; expiration date July 31, 2005.

(3) NESHAP for Oil and Natural Gas Production (40 CFR part 63, subpart HH); Dan Chadwick of the Office of Compliance at (202) 564–7054 or via e-mail to: *chadwick.dan@epa.gov*; EPA ICR Number 1788.04; OMB Control Number 2060–0417; expiration date August 31, 2005.

(4) NESHAP for Carbon Black, Ethylene, Cyanide and Spandex (40 CFR part 63, subpart YY); Marcia Mia of the Office of Compliance at (202) 564–7042 or via e-mail to: *mia.marcia@epa.gov*; EPA ICR Number 1983.03; OMB Control Number 2060–0489; expiration date August 31, 2005.

(5) NESHAP for Metal Coil Surface Coating Plants (40 CFR part 63, subpart SSSS); Learia Williams of the Office of Compliance at (202) 564–4113 or via e-mail to: *williams.learia@epa.gov*; EPA ICR Number 1957.03; OMB Control Number 2060–0487; expiration date August 31, 2005.

(6) NESHAP for Cellulose Products Manufacturing (40 CFR part 63, subpart UUUU); Scott Throwe of the Office of Compliance at (202) 564–7013 or via e-mail to: *throwe.scott@epa.gov*; EPA ICR Number 1974.03; OMB Control Number 2060–0488; expiration date August 31, 2005.

(7) Consolidated Federal Air Rule for SOCMI; Marcia Mia of the Office of Compliance at (202) 564–7042 or via e-mail to: *mia.marcia@epa.gov*; EPA ICR Number 1854.04; OMB Control Number 2060–0443; expiration date August 31, 2005.

(8) NESHAP for Polyether Polyols Production (40 CFR part 63, subpart PPP); Marcia Mia of the Office of Compliance at 202–564–7042 or via e-mail to: *mia.marcia@epa.gov*; EPA ICR Number 1811.04; OMB Control Number 2060–0415; expiration date September 30, 2005.

(9) NESHAP for Natural Gas Transmission and Storage (40 CFR part 63, subpart HHH); Dan Chadwick of the Office of Compliance at (202) 564–7054 or via e-mail to: *chadwick.dan@epa.gov;* EPA ICR Number 1789.04; OMB Control Number 2060–0418; expiration date September 30, 2005.

(10) NSPS for Metallic Mineral Processing Plants (40 CFR part 60, subpart LL); Gregory Fried of the Office of Compliance at (202)564–7016 or via e-mail to: *fried.gregory@epa.gov;* EPA ICR Number 0982.08; OMB Control Number 2060–0016; expiration date September 30, 2005.

D. Information for Individual ICRs

(1) NESHAP for Engine Test Cells/Stands (40 CFR part 63, subpart PPPPP); EPA ICR Number 2066.03; OMB Control Number 2060–0483; expiration date July 31, 2005.

Affected Entities: Sources potentially affected by this action are facilities that test uninstalled engines in engine test cells/stands.

Abstract: The affected entities are subject to the General Provisions of the NESHAP at 40 CFR part 63, subpart A and any changes or additions to the General Provisions specified at 40 CFR part 63, subpart PPPPP. An engine test cell/stand is any apparatus used for testing uninstalled stationary or uninstalled mobile engines. For new or reconstructed engine test cells/stands with startup on or after the effective date of this subpart, the initial notification is due not later than 120 calendar days after the source becomes subject to this standard. Owners or operators of new or reconstructed test cells/stands used for testing internal combustion engines with a rated power of 25 hp or more are also required to submit a semiannual report.

Burden Statement: In the previously approved ICR, the estimated number of respondents for this information collection was 18 with 36 responses per year. The annual industry reporting and recordkeeping burden for this collection of information was 2,840 hours. On average, each respondent reported twice per year and 79 hours were spent preparing each response. The responses were prepared initially and semiannually. The total annualized cost was $6,000, which was comprised of capital/startup costs of $6,000 and no operation and maintenance costs.

(2) NESHAP for Friction Materials Manufacturing (40 CFR part 63, subpart OOOO); EPA ICR Number 2025.03; OMB Control Number 2060–0481; expiration date July 31, 2005.

Affected Entities: Sources potentially affected by this action are friction materials manufacturing facilities.

Abstract: The affected entities are subject to the General Provisions of the NESHAP at 40 CFR part 63, subpart A and any changes or additions to the General Provisions specified at 40 CFR part 63, subpart OOOO.

Friction materials are used to manufacture products that include, but are not limited to, disc brake pucks, disc brake pads, brake linings, brake shoes, brake segments, brake blocks, brake discs, clutch facings, and clutches. The standard contains an emission limitation for solvent mixers at the affected facilities. Respondents must submit a one-time notification of applicability of the standard and a one-time notification of compliance status. Facilities must develop and implement a startup, shutdown, and malfunction plan and submit semiannual reports of any event where the plan was not followed. Semiannual reports for periods of operation during which the emission limitation is exceeded (or reports certifying that no exceedances have occurred) also are required. The general requirements require recordkeeping for applicability determinations; deviations; periods of startups, shutdowns, or malfunctions; monitoring records; and other information needed to determine compliance with the standard.

Burden Statement: In the previously approved ICR, the estimated number of respondents for this information collection was four with 11 responses per year. The annual industry reporting and recordkeeping burden for this collection of information was 1,390 hours. On average, each respondent reported three times per year and 12.5 hours were spent preparing each response. The responses were prepared initially and semiannually. The total annualized cost was $21,000, which was comprised of capital/startup costs of $1,000 and operation and maintenance costs of $1,000.

(3) NESHAP for Oil and Natural Gas Production (40 CFR part 63, subpart HH); EPA ICR Number 1788.04; OMB Control Number 2060–0417; expiration date August 31, 2005.

Affected Entities: Sources potentially affected by this action are facilities that process, upgrade, or store natural gas prior to the point at which natural gas enters the natural gas transmission and storage system.

Abstract: The National Emission Standards for Hazardous Air Pollutants (NESHAP), for the regulations published at 40 CFR part 63, subpart HH, were proposed on February 6, 1998 and promulgated on June 17, 1999.

The affected sources are subject to the General Provisions of the NESHAP at 40 CFR part 63, subpart A and any changes or additions to the general provisions specified at 40 CFR part 63, subpart HH. The requirements include initial notifications, performance tests and periodic reports. Owners or operators are also required to maintain records of the occurrence and duration of any startup, shutdown, or malfunction in the operation of an affected facility, or any period during which the monitoring system is inoperative. Initial and semiannual reports are required.

Burden Statement: In the previously approved ICR, the estimated number of respondents for this information collection was 498 with 996 responses per year. The annual industry reporting and recordkeeping burden for this collection of information was 29,489 hours. On average, each respondent reported twice per year and 29.6 hours were spent preparing each response. The responses were prepared initially and semiannually. The total annualized cost was $567,000, which was comprised of capital/startup costs of $16,000 and operation and maintenance costs of $551,000.

(4) NESHAP for Carbon Black, Ethylene, Cyanide and Spandex (40 CFR part 63, subpart YY); EPA ICR Number 1983.03; OMB Control Number 2060–0489; expiration date August 31, 2005.

Affected Entities: Entities potentially affected by this action are producers and co-producers of hydrogen cyanide and sodium cyanide; producers of carbon black by thermal-oxidative decomposition in a closed system, thermal decomposition in a cyclic process, or thermal decomposition in a continuous process; producers of ethylene from refined petroleum or liquid hydrocarbons; and producers of spandex.

Abstract: The NESHAP for Carbon black, Ethylene, Cyanide and Spandex production was promulgated on July 12, 2002. The affected entities are subject to the General Provisions of the NESHAP at 40 CFR part 63, subpart A and any changes, or additions to the General Provisions specified at 40 CFR part 63, subpart YY.

Carbon black, ethylene, cyanide and spandex production facilities are required to submit initial notifications, maintain records of the occurrence and duration of any startup, shutdown, or malfunction in the operation of an affected source, or any period during which the emissions monitoring system is inoperative. Respondents are required to monitor and keep records of specific operating parameters for each control device and to perform and document periodic inspections of the closed vent and waste water conveyance systems. Owners and operators must also submit semiannual reports of the monitoring results under the leak detection and repair program for cyanide and ethylene production.

Burden Statement: In the previously approved ICR, the estimated number of respondents for this information collection was 73 with 275 responses per year. The annual industry reporting and recordkeeping burden for this collection of information was 33,926 hours. On average, each respondent reported four times per year and 123 hours were spent preparing each response. The responses were prepared initially and semiannually. The total annualized cost was $4,917,000 which was comprised of capital/startup costs of $4,901,000 and operation and maintenance costs of $16,000.

(5) NESHAP for Metal Coil Surface Coating Plants (40 CFR part 63, subpart SSSS); EPA ICR Number 1957.03; OMB Control Number 2060–0487; expiration date August 31, 2005.

Affected Entities: Sources potentially affected by this action are metal coil surface coating plants.

Abstract: The affected entities are subject to the General Provisions of the NESHAP at 40 CFR part 63, subpart A and any changes or additions to the General Provisions specified at 40 CFR part 63, subpart SSSS.

Owners/operators subject to NESHAP are required to submit one-time notifications and one-time reports on compliance status and initial performance test results. Respondents also must develop and implement a startup, shutdown, and malfunction plan. Semiannual reports are required which include information regarding periods of operation during which measured emissions exceed an applicable limit, or control device operating parameters are outside of the established ranges. General recordkeeping requirements applicable to all NESHAP require records of applicability determinations; test results; startup, shutdown, or malfunction events; exceedances; performance test reports, monitoring records, and other information needed to determine compliance with the applicable standard.

Burden Statement: In the previously approved ICR, the estimated number of respondents for this information collection was 89 with 241 responses per year. The annual industry reporting and recordkeeping burden for this collection of information was 25,048 hours. On average, each respondent reported two times per year and 104 hours were spent preparing each response. The responses were prepared, semiannually. The total annualized cost was $236,000, which was comprised of capital/startup costs of $232,000 and operation and maintenance costs of $4,000.

(6) NESHAP for Cellulose Products Manufacturing (40 CFR part 63, subpart UUUU); EPA ICR Number 1974.03; OMB Control Number 2060–0488; expiration date August 31, 2005.

Affected Entities: Entities potentially affected by this action areowners and operators that manufacture cellulose products.

Abstract: The NESHAP for cellulose products manufacturing was promulgated on June 11, 2002.The affected entities are subject to the General Provisions of the NESHAP at 40 CFR part 63, subpart A and any changes, or additions to the General Provisions specified at 40 CFR part 63, subpart UUUU.

Respondents are required to record the values of operating parameters and maintain the averages of those values within the limits established during the performance test or other initial compliance demonstration. Respondents are given the option to use a continuous emissions monitoring system as an alternative to a continuous parameter monitoring system. Respondents are required to comply with the monitoring requirements of 40 CFR part 63, subparts F and G, for wastewater systems and 40 CFR part 63, subpart H or UU, for equipment leaks. Requirements also include notification that the facility is subject to the rule; the notification of performance test; the notification of compliance status (including results of performance tests and other initial compliance demonstrations); and semiannual compliance reports. In addition to the requirements of subpart A, cellulose ether respondents are required to comply with the applicable reporting and recordkeeping requirements of 40 CFR part 63, subparts F and G for wastewater systems, and 40 CFR part 63, subpart H or UU for equipment leaks.

Burden Statement: In the previously approved ICR, the estimated number of respondents for this information collection was 13 with nine responses per year. The annual industry reporting and recordkeeping burden for this collection of information was 1,436 hours. On average, respondents reported 0.7 times per year and 160 hours were spent preparing each response. The responses were prepared initially and semiannually. Annualized costs include capital/startup costs and operation and maintenance costs. There were no annualized costs in the previous ICR.

(7) Consolidated Federal Air Rule for SOCMI; EPA ICR Number 1854.04; OMB Control Number 2060–0443; expiration date August 31, 2005.

Affected Entities: Entities potentially affected by this action are facilities in the synthetic organic chemical industry (SOCMI).

Abstract: The Consolidated Federal Air Rule for SOCMI was promulgated on December 14, 2000. The affected entities are subject to the General Provisions at 40 CFR part 63, subpart A; 40 CFR part 60, subpart A;, 40 CFR part 61, subpart A; as well as the consolidated air rule (CAR) General Provisions at 40 CFR part 65, subpart A and any changes, or additions to the General Provisions specified in the referencing subpart or the CAR.

In general, the New Source Performance Standards (NSPS), NESHAP, and CAR regulations require initial notifications including one-time notifications of initial startup, applicability, and initial compliance status; performance tests, periodic monitoring, recordkeeping, and reporting. Periodic reports are required semiannually, and a startup, shutdown, and malfunction plan must be submitted and updated as needed. In addition, respondents taking advantage of various provisions for waivers, approval of alternative methods, and changes in schedules would be required to submit requests or applications.

Burden Statement: In the previously approved ICR, the estimated number of respondents for this information collection was 3,862 with 10,361 responses per year. The annual industry reporting and recordkeeping burden for this collection of information was 2,165,600 hours. On average, each respondent reported three times per year and 210 hours were spent preparing each response. The responses were prepared initially and semiannually. The total annualized cost was $99,921,000 which was comprised of capital/startup costs of $4,273,000 and operation and maintenance costs of $95,648,000.

(8) NESHAP for Polyether Polyols Production (40 CFR Part 63, Subpart PPP), EPA ICR Number 1811.04; OMB Control Number 2060–0415; expiration date September 30, 2005.

Affected Entities: Entities potentially affected by this action are polyether polyols and polyether monols production facilities.

Abstract: The NESHAP for polyether polyols production was promulgated on June 1, 1999. The affected entities are subject to the General Provisions at 40 CFR part 63, subpart A and any changes, or additions to the General Provisions specified at 40 CFR part 63, subpart PPP.

Polyether polyols production facilities are required to submit initial

notifications, maintain records of the occurrence and duration of any startup, shutdown, or malfunction in the operation of an affected source, or any period during which the emissions monitoring system is inoperative. Respondents are required to monitor and keep records of specific operating parameters for each control device and to perform and document periodic inspections of the closed vent and waste water conveyance systems. All respondents must submit semiannual reports of the monitored parameters and must submit a report within 180 days of any process changes.

Burden Statement: In the previously approved ICR, the estimated number of respondents for this information collection was 82 with 158 responses per year. The annual industry reporting and recordkeeping burden for this collection of information was 88,680 hours. On average, each respondent reported 1.9 times per year and 561 hours were spent preparing each response. The responses were prepared initially and semiannually. The total annualized cost was $513,000 which was comprised of capital/startup costs of $513,000 with no operation and maintenance costs.

(9) NESHAP for Natural Gas Transmission and Storage (40 CFR part 63, subpart HHH); Docket ID Number OECA–2004–0037; EPA ICR Number 1789.04; OMB Control Number 2060–0418; expiration date September 30, 2005.

Affected Entities: Entities potentially affected by this action are those facilities that transport or store natural gas prior to it entering the pipeline to a local distribution company or final end user.

Abstract: The NESHAP for the standard published at 40 CFR part 63, subpart HHH, was proposed on February 6, 1998, and promulgated on June 17, 1999.

The affected sources are subject to the General Provisions at 40 CFR part 63, subpart A, and any changes or additions to the general provisions as specified at 40 CFR part 63, subpart HHH. The requirements include initial notifications, performance tests, and periodic reports. Owners or operators are also required to maintain records of the occurrence and duration of any startup, shutdown, or malfunction in the operation of an affected facility, or any period during which the monitoring system is inoperative. Semiannual reports are also required.

Burden Statement: In the previously approved ICR, the estimated number of respondents for this information collection was seven with 217 responses per year. The annual industry reporting and recordkeeping burden for this collection of information was 581 hours. On average, each respondent reported 31 times per year and 2.7 hours were spent preparing each response. The responses were prepared initially and semiannually. There were no capital/startup costs and no operation and maintenance costs, therefore, the total annualized cost were zero.

(10) NSPS for Metallic Mineral Processing Plants (40 CFR part 60, subpart LL); EPA ICR Number 0982.08; OMB Control Number 2060–0016; expiration date September 30, 2005.

Affected Entities: Entities potentially affected by this action are metallic mineral processing plants.

Abstract: The NSPS for the standard published at 40 CFR part 60, subpart LL, was promulgated on February 21, 1984.

The affected entities are subject to the General Provisions at 40 CFR part 60, subpart A and any changes, or additions to the General Provisions specified at 40 CFR part 60, subpart LL.

Owners or operators of the affected facilities described must make initial notifications, including notification of any physical or operational change to an existing facility which may increase the regulated pollutant emission rate; notification of the demonstration of the continuous monitoring system (CMS) and notification of the initial performance test.

Owners of affected facilities are required to install, calibrate, maintain, and operate a CMS to measure the change in the pressure of the gas stream through the scrubber and the scrubbing liquid flow rate. Owners or operators are also required to maintain records of the occurrence and duration of any startup, shut down, or malfunction in the operation of an affected facility, or any period during which the monitoring system is inoperative. Semiannual reports and monitoring systems performance reports which include the exceeded findings of any control device operating parameters deviations, the date and time of the deviance, the nature and cause of the malfunction (if known), the corrective measures taken, and identification of the time period during which the CMS was inoperative are also required.

Burden Statement: In the previously approved ICR, the estimated number of respondents for this information collection was 22 with 44 responses per year. The annual industry reporting and recordkeeping burden for this collection of information was 1,760 hours. On average, each respondent reported twice per year and 40 hours were spent preparing each response. The total annualized cost was $14,000. There were no capital/startup costs and the operation and maintenance costs were $14,000.

Dated: November 23, 2004.

Michael M. Stahl,

Director, Office of Compliance.

[FR Doc. 04–26477 Filed 11–30–04; 8:45 am]

BILLING CODE 6560–50–P

ENVIRONMENTAL PROTECTION AGENCY

[OPPT–2004–0119; FRL–7686–8]

Targeted Grants to Reduce Childhood Lead Poisoning; Notice of Funds Availability

AGENCY: Environmental Protection Agency (EPA).

ACTION: Notice.

SUMMARY: EPA is soliciting grant proposals from eligible entities to conduct activities to reduce incidences of childhood lead poisoning in vulnerable populations, including projects to: (1) Address areas with high incidences of elevated blood-lead levels; (2) identify and address areas with high potential for heretofore undocumented elevated blood-lead levels; (3) develop tools to address unique and challenging issues in lead poisoning prevention; and (4) identify tools that are replicable and scalable for other areas. Activities eligible for funding include outreach and public education, data gathering, monitoring, training, inspections and assessments, demonstrations, and new, innovative approaches for identifying or reducing lead poisoning. EPA is awarding grants which will provide a total of approximately $750,000. The Agency anticipates awarding individual grants of $25,000 to $100,000. This grant program is open to a wide range of applicants, including state governments, local governments, federally recognized Indian Tribes and tribal consortia, territories, nonprofit organizations, private and state-controlled institutions of higher learning, and nonprofit organizations including community action agencies and other organizations having 501(c)(3) status.

DATES: Proposals must be postmarked, faxed, or e-mailed to EPA on or before January 31, 2005.

ADDRESSES: Proposals may be submitted by mail, fax, or electronically. Please follow the detailed instructions provided in Unit IV. of the **SUPPLEMENTARY INFORMATION**.

FOR FURTHER INFORMATION CONTACT: For specific information regarding your geographic area or application, contact

the appropriate EPA Regional Lead Contact listed in Unit VII. of the **SUPPLEMENTARYINFORMATION**.

SUPPLEMENTARY INFORMATION: The following listing provides certain key information concerning this funding opportunity.

- *Federal agency name*: Environmental Protection Agency (EPA).
- *Funding opportunity title*: Targeted Grants to Reduce Childhood Lead Poisoning.
- *Funding opportunity number*: FON–T001.
- *Announcement type*: The initial announcement of a funding opportunity.
- *Catalog of Federal Domestic Assistance (CFDA) number*: 66–716.
- *Dates*: Proposals must be postmarked, faxed, or e-mailed on or before January 31, 2005. Projects are expected to be completed within 2 years of award of the grant.

I. Funding Opportunity Description

A. Authority

Section 10 of the Toxic Substances Control Act (TSCA), as supplemented by Public Law 106–74, authorizes EPA to award grants for the purpose of conducting research, development, monitoring, education, training, demonstrations, and studies necessary to carry out the purposes of TSCA.

B. Program Description

1. *Purpose and scope*. EPA is soliciting grant proposals from eligible entities to conduct activities to reduce incidences of childhood lead poisoning in vulnerable populations, including projects to: (1) Address areas with high incidences of elevated blood-lead levels; (2) identify and address areas with high potential for heretofore undocumented elevated blood-lead levels; (3) develop tools to address unique and challenging issues in lead poisoning prevention; and (4) identify tools that are replicable and scalable for other areas. Activities eligible for funding include outreach and public education, data gathering, monitoring, training, inspections and assessments, demonstrations, and new, innovative approaches for identifying or reducing lead poisoning.

EPA is awarding grants which will provide a total of approximately $750,000. The Agency anticipates awarding individual grants of $25,000 to $100,000.

This grant program is open to a wide range of applicants, including state governments, local governments, federally recognized Indian Tribes and tribal consortia, territories, nonprofit organizations, private and state-controlled institutions of higher learning, and nonprofit organizations including community action agencies and other organizations having 501(c)(3) status. This list is not intended to be exhaustive, but rather provides a guide for readers regarding entities likely to be eligible for these grants. Other types of entities not listed in this unit could also be eligible.

2. *Activities to be funded*. EPA will provide financial assistance in the form of grants to conduct any or all of the following activities:

i. Outreach (educational) activities, including but not limited to development and conduct of organized outreach efforts to educate families about the dangers to children from exposure to lead-based paint hazards, distribution of educational information, and encouragement of families to have their children screened for lead poisoning and have their homes tested for lead hazards. Activities may include, but are not limited to, training medical professionals, developing culturally specific lead outreach materials, distributing pamphlets, establishing an in-home education program to visit the homes of young children, and promoting lead-safe work practices.

Grantees may develop their own outreach materials; however, the use and reproduction of pre-existing products is strongly encouraged and preferred. EPA and other Federal agencies have developed, and currently provide, a wide range of outreach materials available from the National Lead Information Center (1–800–424–LEAD). Any new lead awareness materials developed must be consistent with the Federal (EPA, Department of Housing and Urban Development (HUD), and Centers for Disease Control and Prevention (CDC, formerly the Centers for Disease Control)) lead hazard awareness and poisoning prevention programs (*http://www.epa.gov/lead/*,*http://www.hud.gov/offices/lead/*, and*http://www.cdc.gov/nceh/lead/lead.htm/*) and receive approval from the appropriate EPA Regional Lead Contact listed in Unit VII.

ii. Data gathering, including but not limited to assessments such as blood-lead screening and other activities described below, particularly for areas without well-documented rates of lead poisoning. This includes conducting blood-lead screening of children age 6 years and under, preferably of children between the ages of 12–36 months (blood-lead levels tend to be highest in this age group). (The CDC's recommended level of concern that encourages follow-up activities is 10 μg/dL, with specific actions/interventions recommended at various elevated blood-lead levels.)

All blood-lead samples collected must be analyzed using a Clinical Laboratory Improvement Amendments (CLIA)-certified laboratory. Portable, hand-held blood-lead analyzers may be used, but must be operated by a laboratory that is CLIA-certified for moderately complex analysis. CLIA regulations, published in 1992 (42 CFR part 493), are administered by the Centers for Medicare and Medicaid Services (CMS, formerly the Health Care Finance Administration). CLIA-certified laboratories must successfully participate in a testing proficiency program that is CLIA approved. Information regarding CLIA may be downloaded from the CMS web site at*http://www.cms.gov/clia/*.

EPA also encourages the development of new assessment methods which may be used in lieu of blood-lead monitoring. In particular, EPA encourages applicants to consider developing new tools to better target populations at risk and to gauge the success of activities funded under this program and other activities designed to combat childhood lead poisoning.

iii. Inspections and risk assessments of pre-1978 housing and/or child-occupied facilities for lead-based paint hazards. This includes collection and analysis of paint, dust, and soil samples for hazardous lead levels. Inspections and risk assessments may only be conducted by individuals appropriately certified. Inspections and risk assessments must be conducted according to the work practice standards found in 40 CFR 745.227 or those of the authorized state or tribal program. Analysis of paint, dust, and soil samples must be conducted by a National Lead Laboratory Accreditation Program (NLLAP)-recognized laboratory. A current list of NLLAP-recognized laboratories can be obtained by calling the National Lead Information Center at 1–800–424–LEAD.

iv. Training. This includes training of individuals and of parents and community members. Worker training includes training to perform abatements, lead inspections, and risk assessments, including initial, refresher, or any other training required to obtain certification to perform lead-based paint inspections and risk assessments. Grant funds cannot be used to pay for any administrative or testing fees for certification to conduct lead inspections and/or risk assessments. Training would also include training of other contractors in lead-safe work practices.

Funds can also be used for training of parents and other community members to do outreach and other efforts which do not require certification.

v. Partnership development, including partnerships with public and private entities which have expertise or experience in training, public health, housing, education, nutrition, public education or public relations, and other fields, as part of the performance of eligible activities and which will improve our ability to eliminate childhood lead poisoning.

vi. Quality assurance activities related to the above. All environmental or health-related measurements or data generation must adequately address the requirements of 40 CFR 30.54 and 31.45 relating to quality assurance/quality control. Information on EPA quality assurance requirements may be downloaded from the EPA Quality System web site at*http://www.epa.gov/quality/*. To begin the process of developing the quality assurance documentation, a quality assurance project plan template has been developed that may be helpful to use as a guide. The template may be downloaded from the EPA/OPPT web site at*http://www.epa.gov/lead/new.htm/*. No testing or analytical work may be performed without an approved quality assurance project plan. For further guidance on preparation of the quality documentation and specific EPA Regional Office approval requirements, please contact the appropriate EPA Regional Lead Contact listed in Unit VII.

vii. Innovative approaches which have a high likelihood of successfully identifying or reducing lead poisoning.

viii. Travel and related expenses consistent with the objectives of this grant.

2. *Goal and objectives*. EPA seeks to award grants to entities best able to undertake eligible activities (outreach and public education, data gathering, monitoring, training, inspections and assessments, demonstrations, and new, innovative approaches for identifying or reducing lead poisoning) that accomplish one or more of the following goals:

i. To reduce the incidence of childhood lead poisoning in areas of vulnerable populations.

ii. To address areas with a high incidence of elevated blood-lead levels in children, and also to identify and address areas with high potential for elevated blood-lead levels in children.

iii. To develop tools to address unique and challenging issues in lead poisoning prevention, including but not limited to special situations affecting inner cities, Tribes, Federal facilities, etc.

iv. To identify tools that are replicable and scalable for other areas combating lead poisoning.

EPA encourages applications addressing areas and/or populations with high documented levels of lead poisoning, as well as proposals to identify and address areas where there is great potential for elevated blood-lead levels to exist, although screening and other data are lacking. In the second case, applicants should submit rationale and evidence to describe why a particular area would be advantageous for EPA to invest in. In addition, the Agency encourages applications that focus on populations at particular risk such as those that live in inner cities, immigrant populations, those that live on Federal facilities, Indian Tribes, etc.

EPA is interested in encouraging innovation, and recognizes that smaller organizations may be uniquely situated to benefit populations that are otherwise hard to reach. Therefore, the award process is open to a wide range of applicants, including states, local governments, Indian Tribes and tribal consortia, territories, nonprofits, universities, and others.

II. Award Information

A total of $750,000 is available under this program at this time. Applicants may receive grants of up to $100,000. EPA's intention is to award 8 to 25 grants, including both smaller and larger grants, assuming applications of sufficient quality are received. Final distribution of the funds will be dependent upon the number of qualified applicants, populations served by each grant, and other factors as deemed appropriate by EPA, along with the evaluation criteria as stated in Unit V.

Applicants may use a portion of the grant funds for contractor support for these activities; however, contractor support may not account for more than 25% of the amount of the grant, except where contract services include blood-lead analysis, training, and/or lead-based paint inspections and risk assessments.

III. Eligibility Information

1. *Threshold eligibility factors*. There are no threshold eligibility factors under this grant program.

2. *Eligibility criteria*. Eligible recipients are those which have the ability to directly address childhood lead poisoning in a given population or area. This includes a wide range of potential applicants, such as state governments, local governments, federally recognized Indian Tribes and tribal consortia, territories, private and state-controlled institutions of higher learning, and nonprofit organizations including community action agencies and other organizations having 501(c)(3) status. This list is not intended to be exhaustive, but rather provides a guide for readers regarding entities likely to be affected by this action. Other types of entities not listed in this unit could also be eligible.

3. *Cost sharing or matching*. There are no requirements for cost sharing or matching funding under this grant program.

IV. Application and Submission Information

1. *Address to request application package*. To obtain an application package, or for further information on individual applications, contact the appropriate EPA Regional Lead Contact listed in Unit VII.

2. *Content and form of application submission*. To apply for a grant under this program, submit one original and one copy of the grant proposal, including a return mailing address, through the mail or electronically to the appropriate EPA Regional Lead Contact listed in Unit VII. The initial proposal must consist of no more than five pages (excluding attachments), with page numbers. One page is one side of a single-spaced typed letter-size page. Fonts must be 10 or 12 characters per inch (cpi) and must have margins that are at least 1 inch. If a package consists of more than five pages, the package will be considered but the additional pages will not be reviewed.

If sent through the mail, grant proposals must be unbound, stapled, or clipped in the upper lefthand corner, on white paper.

The format for the submission must address all of the elements contained in Unit V., and must be organized and outlined as follows:

i. Project title, name of applicant, project contact, target geographic location and/or population affected by the project, funding requested, a statement as to whether this project addresses (a) an area of high incidence of elevated blood-lead or (b) an area of suspected but undocumented elevated blood-lead levels, and a one-paragraph overview of your proposal describing how this project will identify and/or reduce elevated blood-lead levels.

ii. Project narrative including:

- Problem statement.
- Specific goals and objectives (describe in measurable terms the environmental or human health issue to be addressed).
- Project approach and tasks (steps you will take to reach the goals, along with a timeline or schedule).

• Expected outcomes and results (what you hope to accomplish and how you will measure and evaluate this).

• List of deliverables.

iii. Narrative addressing each evaluation criterion separately and in the order shown in Unit V., in which you must describe how this project will meet each criterion.

iv. Brief description of staffing, partners, and funding resources which would be available to implement the proposed project, including number of workers and staff qualifications (no resumes are required).

v. Brief description of the applicant's organization, experience relating to lead poisoning prevention and to the target community, and the organization's infrastructure as it relates to its ability to implement the proposed project.

vi. Attachments must include letters of specific commitment, if any, from partners, and draft Budget Forms 424-A and 424-B (these forms must be finalized if your project is selected for funding).

3. *Submission dates and times*. All grant proposals must be postmarked, e-mailed, or faxed on or before January 31, 2005.

4. *Intergovernmental Review*. Applicants should be aware that formal requests for assistance (i.e., SF424 and associated documentation) may be subject to intergovernmental review under Executive Order 12372, ''Intergovernmental Review of Federal Programs.'' Applicants should contact their state's single point of contact (SPOC) for further information. There is a list of these contacts at the following web site:*http://whitehouse.gov/omb/grants/spoc.html*.

5. *Funding restrictions*. Grant funding may not be used for the following:

i. Buying real property, such as land or buildings.

ii. Lead hazard reduction activities, such as performing interim controls or abatement (as defined in 40 CFR 745.223). However, if your proposal requests grant funding to pay for training activities, EPA is interested in knowing how you plan to ensure those trained will be put to work and how you will track the success of such a program.

iii. Construction activities, such as renovation, remodeling, or building a structure.

iv. Lead-based paint certification fees for individuals and firms.

v. Contractor support in excess of 25% of the amount of the grant award, except where contract services include blood-lead analysis, training, and/or lead-based paint inspections and risk assessments. This limit does not apply to developing quality assurance documentation. However, while grantees may develop their own quality assurance materials, pre-existing templates for inspection and screening are available and EPA strongly encourages their use.

vi. Duplication of funding for any lead-related activities that are being funded or have been previously funded by other EPA or other Federal Government sources.

vii. Case-management costs, including medical treatment for children with elevated blood-lead levels (e.g., followup visits by a doctor or chelation therapy). EPA is extremely interested in knowing what actions you plan to follow regarding monitoring, education, and/or treatment for children whose blood-lead levels are determined under this grant program to be elevated (greater than 10 μg/dL). It is important that the children who are found to have elevated blood-lead levels are treated. Although most case-management costs are not eligible for funding under the grant, a description of specific steps and related information for followup activities must be included in the work plan section of the grant proposal.

6. *Other submission requirements*. If the applicant has conducted, or is currently working on a related project(s), a brief description of those projects, funding sources, primary commitments, and an indication as to whether those commitments were met must be included in the grant proposal. The description must also indicate how the proposed project is different from other funded work conducted by the applicant(s) or unfunded work conducted by another entity, and how the proposed project will not duplicate previous or on-going projects. However, EPA is interested in knowing the extent to which these grants build upon or support previous or other on-going projects, particularly those funded by EPA or other Federal agency grant programs.

Grant proposals should be clearly marked to indicate any information that is to be considered confidential. EPA will make final confidentiality decisions in accordance with Agency regulations in 40 CFR part 2, subparts A and B.

V. Application Review Information

1. *Criteria*. EPA will review all proposals for quality, strength, and completeness. The Agency will use the proposals to select projects to be funded under this grant program. EPA reserves the right to reject all proposals and make no awards. The evaluation criteria are as follows:

Criterion 1: Identifying and/or Addressing Vulnerable Populations at Risk for Lead Poisoning (20 points)

For projects which address a community, population, or area with a significantly higher than average incidence rate of childhood lead poisoning, please address the following questions:

• What are the statistics illustrating that the target community, population, or area has significantly higher than average incidence rates of childhood lead poisoning? Please submit relevant blood-lead monitoring data.

• What are the characteristics of the target areas/populations, especially those which indicate that the need is critical? Include demographic information for the target community and other critical indicators including poverty rate, unemployment rate, special community characteristics (e.g., population density, size), or other factors that support the need for this project (e.g., low-income, minority population, concentration of children, or communities disproportionately impacted by environmental factors). Identify sources of information used to illustrate current conditions.

• How will your proposed project lower the incidence and severity of elevated blood-lead levels in children?

For projects that address a community, population, or area with a high likelihood of higher than average incidence rates of childhood lead poisoning, but where data or information is lacking, please address the following questions:

• Why do you believe that this target area has a high likelihood of higher than average incidence of childhood lead poisoning? Please share all information that you have available to understand the conditions in the target area (e.g., housing age and quality, low-income, minority population, concentration of children, or communities disproportionately impacted by environmental factors).

• Why is it important to better identify the remaining vulnerable populations at risk in the target community, population, or area?

• How will your project better identify the extent and location of childhood lead poisoning (and lower the incidence and severity of elevated blood-lead levels, if your project includes this step)?

Criterion 2: Measurable Results (20 Points)

EPA prefers that progress be shown in real environmental progress rather than solely in amount of work accomplished. Please describe the extent to which the proposal measures both quantitative and

qualitative results. All project proposals must address the following questions:

- What are the measurable short-term results that will be achieved? Please describe measures that are based on outputs (e.g., number of brochures/surveys distributed), behavior changes (e.g., increase in number of children screened, implementing lead-safe techniques), and/or environmental and human health results (e.g., decrease in elevated blood-lead levels, decrease in dust lead levels, identification of actual elevated blood-lead levels in target area).
- How will you ensure that the data and information collected are useable, accessible to the public, and are shared with appropriate stakeholders?
- How will this project develop and encourage the use of innovative techniques, tools, or measures which can identify vulnerable populations at risk and/or measure improvements in environmental and human health (e.g., surrogates for blood-lead testing)?

Criterion 3: Project Overview & Replicability (20 points)

EPA hopes to fund top quality projects that have a high likelihood for success and replicability across the country. EPA intends to award projects that reflect a broad range of areas and populations (e.g., urban, suburban, rural) and intends to showcase successful projects in order to encourage replicability of successful efforts across the country in areas facing similar challenges. Please include sufficient detail to demonstrate whether the project approach is reasonable and the use of resources is sound. All project proposals must address the following questions:

- What are the project goals, tasks, and deliverables for the project?
- What are the characteristics of the target area/population and are there other areas across the country that could benefit from the proposed approach?
- If successful, how could this project, or methods used, be replicated in other communities? Can this project serve as a model for others to use in addressing problems and achieving results?
- What outputs of this project could serve to reduce development, start-up, and/or research costs for other areas or populations?

Criterion 4: Critical Need & Leveraging Resources (20 points)

Please describe how the proposed project will fill a critical need to reduce the incidence or suspected incidence of childhood lead poisoning in the target community/area. In addition, please describe the extent to which resources from this grant program can or will be leveraged by other resources. All project proposals must answer the following questions:

- What are the critical needs to identify the incidence or reduce the incidence of childhood lead poisoning in the target community/area?
- How will this project fit those needs?
- What resources are currently available for the type of work proposed and why are they insufficient or unlikely to virtually eliminate childhood lead poisoning in this community?
- How will any additional resources (e.g., funding, staff time, in-kind resources) be leveraged for this project?

Criterion 5: Community Involvement and Effective Partnerships (15 points)

EPA believes that appropriate and effective community involvement enhances the prospects for overall project success. Please describe the extent to which the target community (e.g., area, neighborhood, population) will be involved in the project. Does this project include specific opportunities to empower the area/population to address the project goals and objectives? Please describe the extent to which the applicant will be partnering with local stakeholders (e.g., HUD, CDC grantees, other EPA grantees, other Federal agencies, local community groups, and/or health professionals) and the expected results of the partnership. Letters of commitment will be reviewed as part of the evaluation process and should explicitly state partner commitment including roles and responsibilities on project. All project proposals must address the following questions:

- How do your partners represent those in the target community/area who have an interest in or will be affected by the project?
- What methods will be used for community involvement to assure that all affected by the project will have the opportunity to participate?
- What will your partners be responsible for as part of your proposal and what commitments have they made to ensure the project's success (e.g., funding, staff time, in-kind resources)?

Criterion 6: Sustainability & Evaluation (5 points)

Please describe the extent to which project components will be evaluated, how the results will be compared to project goals, and how effectiveness will be monitored and judged. Please also describe the extent to which efforts will be made to continue project work beyond the length of the grant period. All project proposals must answer the following questions:

- How will needed changes to the project be identified and incorporated on an ongoing basis?
- After the project is completed, how will results be measured and evaluated to demonstrate how your project goals were met and identify lessons learned?
- How does the project fit into an overall strategic plan to address lead poisoning?
- After funds from EPA are exhausted, will any part of the work continue? What will be done to increase the likelihood of further work in the proposed target community/area?

2. *Review and selection process.* Award decisions will be made on the basis of the initial package. Decisions on awarding the grant funds will be made based on the evaluation of the proposals using the criteria specified in Unit IV. Entities that submit qualifying proposals will be notified by EPA of their selection and will be required to submit official grant applications as a part of the award process. Upon notice of award, you will be given 1 month to submit an official grant application as part of the award process prior to receipt of funds. Materials needed for the official grant application, as well as further information on individual applications, may be obtained though the appropriate EPA Regional Lead Contact listed in Unit VII.

All initial grant proposals received under this notice are subject to the dispute resolution process defined at 40 CFR 30.63 and 40 CFR part 31, subpart F.

Should additional funding become available for award, EPA may award additional grants based on this solicitation, in accordance with and at the time of the final selection process, without further notice or competition.

VI. Award Administration Information

1. *Award notices.* Once proposals have been reviewed and evaluated, the contact person for the applicant (as identified in the proposal) will receive notification from EPA in writing regarding the outcome of the competition. If proposals are selected, additional forms for grant application (such as Standard Form SF–424, Application for Federal Assistance) will be required to be submitted to EPA. The specific information will be provided in the written notification from EPA. In addition, successful applicants will be required to certify that they have not been debarred or suspended from participation in Federal assistance awards in accordance with 40 CFR part 32. The application forms are available on line at*http://www.epa.gov/ogd/AppKit/application.htm*. These forms

should not be submitted with the proposals.

2. *Administration and national policyrequirements—Quality assurance*. EPA's quality assurance requirements must be complied with before any environmental or health-related measurements or data are initiated under this grant. These requirements are addressed in 40 CFR 30.54 and 40 CFR 31.45 relating to quality assurance/quality control. Information on EPA quality assurance requirements may be downloaded from the EPA Quality System web site at *http://www.epa.gov/quality/*. For further guidance on preparation of the quality documentation, and specific EPA Regional approval requirements, please contact the appropriate EPA Regional Lead Contact listed in Unit VII.

3. *Statutory authority and Executive Order reviews*. Section 10 of TSCA, as supplemented by Public Law 106–74, authorizes EPA to award grants for the purpose of conducting research, development, monitoring, education, training, demonstrations, and studies necessary to carry out the purposes of the Act. Presently, these funds are not eligible for use in a Performance Partnership Agreement. The CFDA number is 66–716. Applicants should be aware that formal requests for assistance (i.e., SF–424 and associated documentation) may be subject to intergovernmental review under Executive Order 12372, ''Intergovernmental Review of Federal Programs.'' Applicants should contact their state's single point of contact (SPOC) for further information. There is a list of these contacts at the following web site:*http:/whitehouse.gov/omb/grants/spoc.html*.

4. *Reporting*. The grantee must provide EPA with written progress reports within 30 days after the end of each quarter and a report within 90 days after the end of the project period.

VII. Agency Contact

For specific information regarding your geographic area or application, contact the appropriate EPA Regional Lead Contact. Grant proposals must be submitted by mail or e-mail to the appropriate EPA Regional Lead Contact. The EPA Regional Lead Contacts are listed as follows:

Region 1 (Connecticut, Maine, Massachusetts, New Hampshire, Rhode Island, and Vermont): Regional Contact: James M. Bryson, USEPA Region 1 (CPT), One Congress St., Suite 1100, Boston, MA 02114–0203; telephone number: (617) 918–1524; fax number: (617) 918–0524; e-mail address:*bryson.jamesm@epa.gov*.

Region 2 (New Jersey, New York, Puerto Rico, and the Virgin Islands): Regional Contact: Lou Bevilacqua, USEPA Region 2 (MS 225), 2890 Woodbridge Ave., Edison, NJ 08837; telephone number: (732) 321–6671; fax number: (732) 321–6757; e-mail address:*bevilaqua.louis@epa.gov*.

Region 3 (Delaware, Maryland, Pennsylvania, Virginia, West Virginia, and the District of Columbia): Regional Contact: Demian Ellis, USEPA Region 3 (3WC33), 1650 Arch St., Philadelphia, PA 19103–2029; telephone number: (215) 814–2088; fax number: (215) 814–3114; e-mail address: *ellis.demian@epa.gov*.

Region 4 (Alabama, Florida, Georgia, Kentucky, Mississippi, North Carolina, South Carolina, and Tennessee): Regional Contact: Liz Wilde, USEPA Region 4, 61 Forsyth St., SW., Atlanta, GA 30303; telephone number: (404) 562–8998; fax numbers: (404) 562–8973 and (404) 562–8972;e-mail address: *wilde.liz@epa.gov*.

Region 5 (Illinois, Indiana, Michigan, Minnesota, Ohio, and Wisconsin): Regional Contact: David Turpin, USEPA Region 5 (DT 8J), 77 W. Jackson Blvd., Chicago, IL 60604; telephone number: (312) 886–7836; fax number: (312) 353–4788; e-mail address: *turpin.david@epa.gov*.

Region 6 (Arkansas, Louisiana, New Mexico, Oklahoma, and Texas): Regional Contact: Eva Steele, USEPA Region 6, 1445 Ross Ave., 12th Floor (6PD T), Dallas, TX 75202; telephone number: (214) 665–7211; fax number: (214) 665–6762; e-mail address: *steele.eva@epa.gov*.

Region 7 (Iowa, Kansas, Missouri, and Nebraska): Regional Contact: Larry Stafford, USEPA Region 7, ARTD/RALI, 901 North 5th, Kansas City, KS 66101; telephone number: (913) 551–7394; e-mail address:*stafford.larry@epa.gov*.

Region 8 (Colorado, Montana, North Dakota, South Dakota, Utah, and Wyoming): Regional Contact: Amanda Hasty, USEPA Region 8, 999 18th St., Suite 300, Denver, CO 80202; telephone number: (303) 312–6966; fax number (303) 312–6044; e-mail address:*hasty.amanda@epa.gov*.

Region 9 (Arizona, California, Hawaii, Nevada, American Samoa, and Guam): Regional Contact: Nancy Oien, USEPA Region 9 (CMD 4), 75 Hawthorne St., San Francisco, CA 94105, telephone number: (415) 972–3780; fax number: (415) 947–3583; e-mail address: *oien.nancy@epa.gov*.

Region 10 (Alaska, Idaho, Oregon, and Washington): Regional Contact: Barbara Ross, USEPA Region 10, Solid Waste and Toxics Unit (AWT 128), 1200 Sixth Ave., Seattle, WA 98101, telephone number: (206) 553–1985; fax number: (206) 553–8509; e-mail address:*ross.barbara@epa.gov*.

VIII. Other Information

A. Does this Action Apply to Me?

This action may be of particular interest to those who have the ability to directly address childhood lead poisoning in a given population or area, such as state governments, local governments, federally recognized Indian Tribes and tribal consortia, territories, private and state-controlled institutions of higher learning, and nonprofit organizations including community action agencies and other organizations having a 501(c)(3) status. Since other entities may also be interested, the Agency has not attempted to describe all the specific entities that may be affected by this action. If you have any questions regarding the applicability of this action to a particular entity, consult the appropriate EPA Regional Lead Contact listed in Unit VII.

B. How Can I Access Copies of this Document and Other Related Documents?

1. *Docket*. EPA has established an official public docket for this action under docket identification (ID) number OPPT 2004–0119. The official public docket is the collection of materials that is available for public viewing at the EPA Docket Center, Rm. B-102 Reading Room, EPA West, 1301 Constitution Ave., NW., Washington, DC. The EPA Docket Center is open from 8:30 a.m. to 4:30 p.m., Monday through Friday, excluding legal holidays. The EPA Docket Center Reading Room telephone number is (202) 566–1744, and the telephone number for the OPPT Docket, which is located in EPA Docket Center, is (202) 566–0280.

2. *Electronic access*. You may access this **Federal Register** document electronically through the EPA Internet under the ''**Federal Register**'' listings at*http://www.epa.gov/fedrgstr/*. An electronic version of the public docket is available through EPA's electronic public docket and comment system, EPA Dockets. You may use EPA Dockets at*http://www.epa.gov/edocket/* to submit or view public comments, access the index listing of the contents of the official public docket, and to access those documents in the public docket that are available electronically. Although not all docket materials may be available electronically, you may still access any of the publicly available docket materials through the docket facility identified in Unit VIII.B.1. Once

in the system, select ''search,'' then key in the appropriate docket ID number.

IX. Submission to Congress and the Comptroller General

Grant solicitations such as this are considered rules for the purpose of the Congressional Review Act (CRA). The CRA, 5 U.S.C. 801 *et seq*., as added by the Small Business Regulatory Enforcement Fairness Act of 1996 (SBREFA), generally provides that before a rule may take effect, the agency promulgating the rule must submit a rule report, which includes a copy of the rule, to each House of the Congress and to the Comptroller General of the United States. EPA will submit a report containing this rule and other required information to the U.S. Senate, the U.S. House of Representatives, and the Comptroller General of the United States prior to publication of the rule in the **Federal Register**. This is not a ''major rule'' as defined by 5 U.S.C. 804(2).

List of Subjects

Environmental protection, Grants, Lead, Lead-based paint, Maternal and child health.

Dated: November 24, 2004.

Margaret Schneider,

Acting Assistant Administrator, Office of Prevention, Pesticides and Toxic Substances.

[FR Doc. 04–26474 Filed 11–30–04; 8:45 am]

BILLING CODE 6560–50–S

ENVIRONMENTAL PROTECTION AGENCY

[OPP–2004–0279; FRL–7684–9]

National Agricultural Workers Pesticide Safety Training and Education Program; Notice of Funds Availability

AGENCY: Environmental Protection Agency (EPA).

ACTION: Notice.

SUMMARY: EPA's Office of Pesticide Programs (OPP) is soliciting proposals from eligible parties for an EPA cooperative agreement to provide financial assistance to an eligible organization to continue an effort to conduct a national train-the-trainer program to educate farmworkers about how to reduce risks from pesticides. As part of this program the grantee will train pesticide safety educators who will work with farmworker service organizations, growers, and other members of the agricultural community in key rural areas with high pesticide use and large numbers of farmworkers conducting pesticide safety programs for agricultural workers and their families. The total funding available for award in FY 2005, which represents funding set aside in FY 2004, is expected to be approximately $400,000. At the conclusion of the first 1 year period of performance and, based on the availability of future funding, incremental funding of up to $400,000 may be made available for each year allowing the project to continue for a total of five periods of performance (approximately 5 years) and with a total potential funding of up to $2,000,000 for the 5–year period, depending on need and the Agency budget in outlying years.

DATES: Applications must be received on or before January 18, 2005.

ADDRESSES: Applications, may be submitted by mail, fax, or electronically. Please follow the detailed instructions provided in Unit IV. of the **SUPPLEMENTARY INFORMATION**.

FOR FURTHER INFORMATION CONTACT: Carol Parker, Field and External Affairs Division (7506C), Office of Pesticide Programs, Environmental Protection Agency, 1200 Pennsylvania Ave., NW., Washington, DC 20460–0001; telephone number: (703) 305–6458; fax number: (703) 308–2962; e-mail address: *parker.carol@epa.gov*.

SUPPLEMENTARY INFORMATION: The following listing provides certain key information concerning the funding opportunity.

- *Federal agency name*: Environmental Protection Agency (EPA).
- *Funding opportunity title*: National Agricultural Workers Pesticide Safety Training and Education Program.
- *Funding opportunity number*: OPP–001.
- *Announcement type*: The initial announcement of a funding opportunity.
- *Catalog of Federal Domestic Assistance (CFDA) number*: This program is included in the Catalog of Federal Domestic Assistance under number 66.716 at *http://www.cfda.gov/public/whole.pdf*.
- *Dates*: Applications must be received by EPA on or before January 18, 2005.

I. Funding Opportunity Description

A. Authority

EPA expects to enter into cooperative agreements under the authority provided in FIFRA section 20 which authorizes the Agency to issue grants or cooperative agreements for research, public education, training, monitoring, demonstration and studies. Regulations governing these cooperative agreements are found at 40 CFR part 30 for institutions of higher education, colleges and universities, and non-profit organizations; and 40 CFR part 31 for States and local governments. In addition, the provisions in 40 CFR part 32, governing government wide debarment and suspension; and the provisions in 40 CFR part 34, regarding restrictions on lobbying apply. All costs incurred under this program must be allowable under the applicable OMB Cost Circulars: A-87 (States and local governments), A-122 (nonprofit organizations), or A-21 (universities). Copies of these circulars can be found at *http://www.whitehouse.gov/omb/circulars*. In accordance with EPA policy and the OMB circulars, as appropriate, any recipient of funding must agree not to use assistance funds for lobbying, fund-raising, or political activities (e.g., lobbying members of Congress or lobbying for other Federal grants, cooperative agreements or contracts). See 40 CFR part 34.

B. Program Description

1. *Purpose and scope*. EPA's Certification and Worker Protection Branch of the Field and External Affairs Division, Office of Pesticide Programs (OPP), is requesting proposals to train farmworkers, farmworker families, and the agricultural community regarding the potential hazards associated with pesticide chemicals and how to reduce those risks.

Under this new cooperative agreement, experience and/or expertise is critical to conduct worker protection pesticide safety training and education program for the unique population of farmworkers, including: A comprehensive, national training and outreach pesticide safety education program for farmworkers; an ability to conduct specialized training for Spanish speaking agricultural workers and their families with low literacy levels; qualified managers and staff devoted to training farmworkers about pesticide hazards; offices with pesticide safety programs and trainers in rural communities near agricultural areas with high farmworker populations; and full-time trainers whose primary responsibility is to train farmworkers about pesticide safety.

2. *Activities to be funded*. EPA will award a cooperative agreement for the National Agricultural Workers Pesticide Safety Training and Education Program under section 20 of FIFRA, as amended, for the continuation of a public training and education pesticide safety program of farmworkers, farmworker families,

and other members of the agricultural community to reduce exposure to the hazards of pesticides. Key activities to be funded under this cooperative agreement are:

i. Training of at least 14,000 farmworkers, farmworker families, and other members of the agricultural community each year in the key pesticide safety provisions of the Worker Protection Standard (WPS), 40 CFR 170.130.

ii. Development or utilization of a pesticide safety training program, including trainers and materials, which address the predominately Spanish speaking, low literacy level needs of agricultural workers.

iii. Development and/or utilization of WPS approved pesticide safety curricula and materials for agricultural workers. The curriculum and materials would convey as a minimum the following information:

- Where and in what form pesticides may be encountered during work activities.
- Hazards of pesticides resulting from toxicity and exposure, including acute and chronic effects, delayed effects, and sensitization.
- Routes through which pesticides can enter the body.
- Signs and symptoms of pesticide poisoning.
- Emergency first aid for pesticide injuries or poisonings.
- How to obtain emergency medical care.
- Routine and emergency decontamination procedures, including eye flushing techniques.
- Hazards from pesticide residues on clothing.
- Warnings about taking pesticide containers home.
- Requirements of the WPS, including reducing the risks of illness or injury resulting from workers' occupational exposure to pesticides, including application and entry restrictions, the design of the warning sign, posting of warning signs, oral warnings, the availability of specific information about applications, and protection against retaliatory acts.

iv. Conducting a national and/or several regional train-the-trainer workshops for a minimum of 30 pesticide safety educators. Workshops would train trainers of farmworkers about the importance of pesticide safety, the curriculum and materials to be used, how to reach farmworkers and work with growers, crew leaders, and other members of the agricultural community to utilize the training, and how to get certified as an official trainer by the state. Workshops would also include practice sessions for trainers.

v. Establishment of pesticide safety training programs in at least 15 local sites in rural areas with a minimum of 12 states including key states with high farmworker populations and high pesticide usage.

vi. Outreach and partnership programs with federal, state and local programs and agencies; farmworker service providers; growers and grower organizations; and other members of the agricultural community to utilize and certify the worker protection pesticide safety program for agricultural workers. While matching funds are not required, they are encouraged to meet the training needs of over 2½ million farmworkers.

vii. Develop or utilize a pesticide safety training evaluation tool like a pre- and post-tests to evaluate the effectiveness of the training program and modify the training to improve it as necessary.

3. *Goal and objectives*. Under the Federal Insecticide, Fungicide, and Rodenticide Act (FIFRA) (7 U.S.C. 136W), EPA developed the WPS to protect the 2½ million agricultural workers and other members of the public from the hazards of pesticides. Under this standard, workers must receive protections and information to prevent pesticide poisonings. Under this cooperative agreement, EPA seeks to work with organizations that have unique and special skills on reaching agricultural workers, who are predominately Spanish speaking, with low literacy levels, often transient, and difficult to reach through more conventional communications networks.

The objectives of this program would be to develop or continue an interactive training program to educate farmworkers, their families, and other members of the agricultural community about how to protect themselves from pesticides. The training program would be based primarily in Spanish, although parts could include other key languages that farmworkers speak. Information would be presented in an interactive format directed at reaching low literacy populations and in non-traditional settings. The program should be developed to reach farmworkers in key high farmworker rural areas with high pesticide uses and high hand-labor agricultural areas. The pesticide safety training program for agricultural workers could develop new curriculum or utilize national, state or organizational outreach materials. The information to be conveyed should include the requirements outlined in the WPS (40 CFR part 170).

4. *History*. In August of 1992, EPA's WPS (40 CFR part 170) was published to require actions to reduce the risk of pesticide poisonings and injuries among agricultural workers and pesticide handlers. The WPS offers protections to more than 3½ million agricultural workers who work with pesticides at more than 560,000 workplaces on farms, forests, nurseries, and greenhouses. The WPS contains requirements for pesticide safety training, notification of pesticide applications, use of personal protective equipment, restricted entry intervals following pesticide application, decontamination supplies, and emergency medical assistance.

Since 1995, OPP has provided funding for several research and education programs designed to evaluate and convey pesticide safety information to farmworkers. Since 2000, OPP funded a cooperative agreement, The National Pesticide Education Program for Agricultural Workers and Farmworker Children, that trained full-time educators to teach agricultural workers and their families how to reduce the risks from pesticide hazards. Through this program nearly 350,000 farmworkers, farmworker families, and community members have been trained about how to reduce risks from pesticide hazards. This program has researched and evaluated methods for delivering pesticide safety information to a predominately non-English speaking, low literacy, migrant populations. The program developed a curriculum on pesticide safety and established a program on pesticide safety for agricultural workers, their families and community members. The program trained between 50 and 70 educators yearly about pesticide safety, and education and outreach techniques, which in turn trained about 25,000 farmworkers, farmworker families, and other members of the farmworker community each year.

II. Award Information

The funding for the selected award project is in the form of a cooperative agreement awarded under section 20 of FIFRA. The total funding available for award in FY 2005 represents funding set aside in FY 2004 and is expected to be approximately $400,000. At the conclusion of the first 1 year period of performance, incremental funding of up to $400,000 may be made available for each subsequent year, depending on need and the Agency budget in outlying years, which would allow the project to continue for a total of five periods of performance (approximately 5 years) and totaling up to $2,000,000 for the 5–year period.

Should additional funding become available for award, based on the Agency budget in those outlying years, the Agency may award additional grants based on this solicitation and in accordance with the final selection process, without further notice of competition during the first year of the competition award.

III. Eligibility Information

1. *Threshold eligibility factors.* To be eligible for consideration, applicants must meet all of the following criteria. Failure to meet the following criteria will result in the automatic disqualification for consideration of the proposal for funding:

i. Be an applicant who is eligible to receive funding under this announcement, including states, U.S. territories or possessions, federally recognized Tribal governments and organizations, public and private universities and colleges, hospitals, laboratories, other public or private nonprofit institutions and individuals. Non-profit organizations described in section 501(c)(4) of the Internal Revenue Code that engage in lobbying activities as defined in section 3 of the Lobbying Disclosure Action of 1995 are not eligible to apply. Eligible applicants may include: Agricultural, environmental, health, and educational organizations and agencies, colleges or universities, and other public or non-profit agencies, authorities, institutions, organizations, individuals or other qualified entities working in agricultural and/or pesticide training, safety, education and communications. Applicants with experience and/or expertise working with farmworkers; farmworker families; agricultural employers; farmworker support organizations; the Cooperative Extension Service; local state, and national agriculture, environment, labor and occupational health, rural and migrant health, and/or education agencies are eligible.

ii. The proposal must address all of the criteria in the high priority areas for consideration listed under Unit III.2.

iii. The proposal must address all of the activities to be funded listed under Unit I.B.2.

iii. The proposal must meet all format and content requirements contained in Unit IV.

The proposal must comply with the directions for submittal contained in this notice.

2. *Eligibility criteria.* Applicants must demonstrate ability, experience and/or expertise in working with providing pesticide safety education to the unique population of farmworkers in the following high priority areas for consideration. Applicants will be evaluated on the following criteria:

i. *Expertise in language and literacy needs of farmworkers.* Applicant must have expertise in providing education, training, and other services to the needs of the farmworker population. Since the farmworker population has an average educational levels of only the sixth grade, applicants must demonstrate expertise in reaching low literacy level populations. Also, since 84% of farmworkers speak Spanish, applicants must demonstrate an ability to present pesticide safety information in Spanish.

ii. *Ability to provide comprehensive pesticide safety program for farmworkers, farmworker families, and agricultural community members.* Applicants must demonstrate the capacity of providing comprehensive worker training including key pesticide safety information, as outlined in the WPS, 40 CFR 170.130.

iii. *Extensive outreach strategies to farmworkers and rural communities.* Applicants must develop extensive outreach strategies that include areas where farmworkers work and reside. Provisions to train farmworkers and their families in labor camps, work sites on growers' property, in community centers, in churches, migrant health clinics, in schools, and farmworker employment and training offices. In addition, applicants must have the ability to conduct outreach programs with growers and small farmers and work with them to deliver pesticide training programs to their workers.

iv. *National network of offices in at least 15 agricultural areas with high farmworker populations in at least 12 states.* Since farmworkers live and work in hard to reach rural areas, applicants must describe how the training program would work with affiliate farmworker support offices in those 15 or more agricultural areas in close proximity to farmworkers in at least 12 states.

v. *Broad educational program with over 30 outreach trainers in pesticide safety.* Applicants must demonstrate that they have experience conducting effective pesticide safety education and training for farmworkers and a comprehensive curriculum for reaching farmworkers about pesticide safety. Applicants must have a staff of at least 30 full-time outreach workers whose main job is training farmworkers to prevent exposure to pesticides.

vi. *Ability to train a minimum of 14,000 farmworkers each year about pesticide safety.* Since there are approximately 2½ million farmworkers and 20% of these are new workers who enter the U.S. agricultural workforce every year, the applicant must demonstrate the ability to train at least 14,000 farmworkers a year about pesticide safety measures including minimum criteria outlined in the WPS, 40 CFR 170.130.

3. *Cost sharing or matching.* There are no cost share requirements for this project. However, matching funds are strongly encouraged in order to train the highest number of farmworkers.

IV. Application and Submission Information

1. *Address to request proposal package.* Carol Parker, Field and External Affairs Division (7506C), Office of Pesticide Programs, Environmental Protection Agency, 1200 Pennsylvania Ave., NW., Washington, DC 20460–0001; telephone number: (703) 305–6458; fax number: (703) 308–2962; e-mail address: *parker.carol@epa.gov.*

2. *Content and form of application submission.* Proposals must be typewritten, double spaced in 12 point or larger print using 8.5 x 11 inch paper with minimum 1 inch horizontal and vertical margins. Pages must be numbered in order starting with the cover page and continuing through the appendices. One original and one electronic copy (e-mail or disk) is required.

All proposals must include:

- Completed Standard Form SF 424*, Application for Federal Assistance. Please include organization fax number and e-mail address. The application forms are available on line at *http://www.epa.gov/ogd/grants/how_to_apply.htm.*
- Completed Section B--Budget Categories, on page 1 of Standard Form SF 424A* (see allowable costs discussion below). Blank forms may be located at *http://www.epa.gov/ogd/grants/how_to_apply.htm.*
- Detailed itemization of the amounts budgeted by individual Object Class Categories (see allowable costs discussion below).
- Statement regarding whether this proposal is a continuation of a previously funded project. If so, please provide the assistance number and status of the current grant/cooperative agreement.

Executive Summary. The Executive Summary shall be a stand alone document, not to exceed one page, containing the specifics of what is proposed and what you expect to accomplish regarding measuring or movement toward achieving project goals. This summary should identify the measurable environmental results you expect including potential human health benefits.

Table of contents. A one page table listing the different parts of your proposal and the page number on which each part begins. Proposal narrative. Includes Parts I–V as identified below (not to exceed 10 pages).

Part I--Project title. Self explanatory.

Part II--Objectives. A numbered list (1, 2, etc.) of concisely written project objectives, in most cases, each objective can be stated in a single sentence.

Part III--Justification. For each objective listed in Part II, discuss the potential outcome in terms of human health, environmental and/or pesticide risk reduction.

Part IV--Approach and methods. Describe in detail how the program will be carried out. Describe how the system or approach will support the program goals.

Part V--Impact assessment. Please state how you will evaluate the success of the program in terms of measurable results. How and with what measures will humans be better protected as a result of the program. Quantifiable risk reduction measures should be described.

Appendices. These appendices must be included in the cooperative agreement proposal. Additional appendices are not permitted.

Timetable. A timetable that includes what will be accomplished under each of the objectives during the project and when completion of each objective is anticipated.

Major participants. List all affiliates or other organizations, educators, trainers and others having a major role in the proposal. Provide name, organizational affiliation, or occupation and a description of the role each will play in the project. A brief resume (not to exceed two pages) should be submitted for each major project manager, educator, support staff, or other major participant.

3. *Submission dates and times*. You may submit an application through the mail, by fax, or electronically. Regardless of submission method, all applications must be received by EPA on or before January 18, 2005.

4. *Intergovernmental Review*. Applicants should be aware that formal requests for assistance (i.e., SF 424 and associated documentation) may be subject to intergovernmental review under Executive Order 12372, ''Intergovernmental Review of Federal Programs.'' Applicants should contact their state's single point of contact (SOC) for further information. There is a list of these contacts at the following web site: *http:/whitehouse.gov/omb/grants/spoc.html*.

5. *Funding restrictions*. EPA grant funds may only be used for the purposes set forth in the cooperative agreement, and must be consistent with the statutory authority for the award. Cooperative agreement funds may not be used for matching funds for other Federal grants, lobbying, or intervention in Federal regulatory or adjudicatory proceedings. In addition, federal funds may not be used to sue the federal government or any other governmental entity. All costs identified in the budget must conform to applicable Federal Cost Principles contained in OMB Circular A-87; A-122; and A-21, as appropriate.

6. *Other submission requirements*. As indicated above, each application must include the original paper copy of the submission, along with one electronic copy. The electronic copy of your application package, whether submitted separately by e-mail or on a disk, please ensure that the electronic copy is consolidated into a single file, and that you use Word Perfect WP8/9 for Windows, or Adobe PDF 4/5. If mailing a disk, please use a 3.5 disk that is labeled as a proposal for the National Agricultural Workers Pesticide Safety Training and Education Program, and include your pertinent information. Please check your electronic submissions to ensure that it does not contain any computer viruses. If an electronic submission is found to contain a virus, that submission will be disqualified from consideration.

Submit your application using one of the following methods:

By mail to: Carol Parker, Office of Pesticide Programs, Mail code: 7506C, Environmental Protection Agency, 1200 Pennsylvania Ave., NW., Washington, DC 20460.

By fax to: Carol Parker at fax number: (703) 308–2962.

By e-mail to: *parker.carol@epa.gov*.

7. *Confidential business information*. Applicants should clearly mark information contained in their proposal which they consider confidential business information. EPA reserves the right to make final confidentiality decisions in accordance with Agency regulations at 40 CFR part 2, subpart B. If no such claim accompanies the proposal when it is received by EPA, it may be made available to the public by EPA without further notice to the applicant.

V. Application Review Information

Applicants will be screened to ensure that they meet all eligibility criteria and will be disqualified if they do not meet all eligibility criteria. All proposals will be reviewed, evaluated, and ranked by a selected panel of EPA reviewers based on the following evaluation criteria and weights (Total: 100 points):

1. Project proposal must meet minimum requirements for the number of full-time trainers, number of locations, and number of workers trained, as outlined in Unit III.2. (Weighting: 35 points)

2. Project proposal must provide information on the education, skills, training of the project leader and/or other key managers. As appropriate, cite technical qualifications and specific examples of prior, relevant experience. Demonstrate experience and/or ability of organization to conduct national pesticide safety education and training programs for agricultural workers as outlined in Unit III.2. (Weighting: 30 points)

3. Qualification and experience of the applicant relative to the language, low literacy, and outreach to the farmworker community, as outlined in Unit III.2. (Weighting: 25 points)

4. Provisions for a quantitative or qualitative evaluation of the project success at achieving stated goals Unit III.2. (Weighting: 10 points)

The proposals will be reviewed and evaluated by a team of internal EPA Worker Protection and Pesticide Safety Training experts. The final funding decision will be made from a group of top rated proposals by the Chief of the Certification and Worker Protection Branch, Field and External Affairs Division, Office of Pesticide Programs. The Agency reserves the right to reject all proposals and make no awards. The procedures for dispute resolution at 40 CFR 30.63 and 40 CFR 31.70 apply.

VI. Award Administration Information

1. *Award notices*. The Certification and Worker Protection Branch in OPP will mail an acknowledgment to applicants upon receipt of the application. Once all of the applications have been reviewed, evaluated, and ranked, applicants will be notified of the outcome of the competition. A listing of the successful proposal will be posted on the Certification and Worker Protection website address at the conclusion of the competition (go to: *http://www.epa.gov/pesticides/health/worker.htm*). The website may also contain additional information about this announcement including information concerning deadline extensions or other modifications.

2. *Administrative and national policy requirements*. An applicant whose proposal is selected for federal funding must complete additional forms prior to award (see 40 CFR 30.12 and 31.10), and will be required to certify that they have not been debarred or suspended from

participation in federal assistance awards in accordance with 40 CFR part 32.

3. *Reporting.* The successful recipient will be required to submit quarterly and annual reports, and to submit annual financial reports. The specific information contained within the report will include at a minimum, a comparison of actual accomplishments to the objectives established for the period. The Certification and Worker Protection Branch may request additional information relative to the scope of work in the cooperative agreement and which may be useful for Agency reporting under the Government Performance and Results Act.

VII. Agency Contact

Carol Parker, Field and External Affairs Division (7506C), Office of Pesticide Programs, Environmental Protection Agency, 1200 Pennsylvania Ave., NW., Washington, DC 20460–0001; telephone number: (703) 305–6458; fax number: (703) 308–2962; e-mail address: *parker.carol@epa.gov*.

VIII. Other Information

A. Does this Action Apply to Me?

This action is directed to the public in general. Assistance is generally available to States, U. S. territories or possessions, federally recognized Tribal governments and organizations, public and private universities and colleges, hospitals, laboratories, other public or private nonprofit institutions and individuals. Non-profit organizations described in section 501(c)(4) of the Internal Revenue Code that engage in lobbying activities as defined in section 3 of the Lobbying Disclosure Action of 1995 are not eligible to apply. This program may, however, be of particular interest to farmworker and agricultural workers support organizations and agencies; environmental, health, and educational organizations and agencies; colleges or universities, and other public or non-profit agencies, authorities, institutions, organizations, individuals or other qualified entities working in agricultural training, safety, education and communications. Because others may also be interested, the Agency has not attempted to describe all the specific entities that may be interested by this action. If you have any questions regarding the applicability of this action to a particular entity, consult the person listed under **FOR FURTHER INFORMATION CONTACT**.

B. How Can I Access Copies of this Document and Other Related Information?

1. *Docket.* EPA has established an official public docket for this action under docket identification (ID) number OPP–2004–0279. The official public docket is the collection of materials that is available for public viewing at the Public Information and Records Integrity Branch (PIRIB), Rm. 119, Crystal Mall #2, 1801 S. Bell St., Arlington, VA. This docket facility is open from 8:30 a.m. to 4 p.m., Monday through Friday, excluding legal holidays. The docket telephone number is (703) 305–5805.

2. *Electronic access.* You may access this **Federal Register** document electronically through the EPA Internet under the ''**Federal Register**'' listings at *http://www.epa.gov/fedrgstr/*. An electronic version of the public docket is available through EPA's electronic public docket and comment system, EPA Dockets. You may use EPA Dockets at *http://www.epa.gov/edocket/* to access the index listing of the contents of the official public docket, and to access those documents in the public docket that are available electronically. Although not all docket materials may be available electronically, you may still access any of the publicly available docket materials through the docket facility identified in the Unit IV.A.1. Once in the system, select ''search,'' then key in the appropriate docket ID number.

IX. Submission to Congress and the Comptroller General

Grant solicitations such as this are considered rules for the purpose of the Congressional Review Act (CRA) (5 U.S.C. 801 *et seq.*). The CRA generally provides that before a rule may take effect, the agency promulgating the rule must submit a rule report, which includes a copy of the rule, to each House of the Congress and to the Comptroller General of the United States. EPA will submit a report containing this grant solicitation and other required information to the U.S. Senate, the U.S. House of Representatives, and the Comptroller General of the United States prior to its publication in the **Federal Register**. This rule is not a ''major rule'' as defined by 5 U.S.C. 804(2).

List of Subjects

Environmental protection, Grants, Pesticides, Training.

Dated: November 18, 2004.

Margaret Schneider,

Acting Assistant Administrator, Office of Prevention, Pesticides and Toxic Substances.

[FR Doc. 04–26397 Filed 11–30–04; 8:45 am]

BILLING CODE 6560–50–S

ENVIRONMENTAL PROTECTION AGENCY

[FRL–7844–1]

Jehl Cooperage Company Inc. Superfund Site; Notice of Settlement

AGENCY: Environmental Protection Agency.

ACTION: Notice of settlement.

SUMMARY: Under section 122(h)(1) of the Comprehensive Environmental Response, Compensation and Liability Act (CERCLA), the Environmental Protection Agency (EPA) has entered into an Agreement for Recovery of Past Cost (Agreement) at the Jehl Cooperage Company Inc Superfund Site (Site) located in Memphis, Shelby County, Tennessee, with Unocal. EPA will consider public comments on the Agreement until January 3, 2005. EPA may withdraw from or modify the Agreement should such comments disclose facts or considerations which indicate the Agreement is inappropriate, improper, or inadequate. Copies of the Agreement are available from: Ms. Paula V. Batchelor, U.S. Environmental Protection Agency, Region 4, Superfund Enforcement & Information Management Branch, Waste Management Division, 61 Forsyth Street, SW., Atlanta, Georgia 30303, (404) 562–8887.

Written comment may be submitted to Paula V. Batchelor at the above address within 30 days of the date of publication.

Dated: November 16, 2004.

Rosalind Brown,

Chief, Superfund Enforcement & Information Management Branch.

[FR Doc. 04–26478 Filed 11–30–04; 8:45 am]

BILLING CODE 6560–50–P

ENVIRONMENTAL PROTECTION AGENCY

[FRL–7844–2]

Middlesboro, Tannery Superfund Site; Notice of Proposed Settlement

AGENCY: Environmental Protection Agency.

ACTION: Notice of proposed settlement.

SUMMARY: Under section 122h(h)(1) of the Comprehensive Environmental

Response, Compensation and Liability Act (CERCLA), the Environmental Protection Agency (EPA) has entered into an Agreement for Recovery of past response costs at the Middlesboro, Tannery Superfund Site located in Middlesboro, Bell county, Kentucky. EPA will consider public comments on the agreement until January 3, 2005. EPA may withdraw from or modify the Agreement should such comments disclose facts or consideration which indicate the Agreement is inappropriate, improper, or inadequate. Copies of the Agreement are available from: Ms. Paula V. Batchelor, U.S. Environmental Protection Agency, Region 4, (WMD–SEIMB), 61 Forsyth Street, SW., Atlanta, Georgia 30303, (404) 562–8887, *Batchelor.Paula@epa.gov*.

Written comments may be submitted to Ms. Batchelor at the above address within 30 days of the date of publication.

Dated: November 16, 2004.

Rosalind H. Brown,

Chief, Superfund Enforcement Information Management Branch.

[FR Doc. 04–26479 Filed 11–30–04; 8:45 am]

BILLING CODE 6560–50–P

ENVIRONMENTAL PROTECTION AGENCY

[FRL–7844–3]

Clean Water Act Section 303(d): Availability of Total Maximum Daily Loads (TMDL)

AGENCY: Environmental Protection Agency (EPA).

ACTION: Notice of availability.

SUMMARY: This notice announces the availability for comment of the administrative record files for 4 TMDLs and the calculations for these TMDLs prepared by EPA Region 6 for waters listed in the Barataria river basin of Louisiana, under section 303(d) of the Clean Water Act (CWA). These TMDLs were completed in response to a court order in the lawsuit styled *Sierra Club, et al.* v. *Clifford, et al.*, No. 96–0527 (E.D. La.).

DATES: Comments must be submitted in writing to EPA on or before January 3, 2005.

ADDRESSES: Comments on the 4 TMDLs should be sent to Ellen Caldwell, Environmental Protection Specialist, Water Quality Protection Division, U.S. Environmental Protection Agency Region 6, 1445 Ross Ave., Dallas, TX 75202–2733 or e-mail: *caldwell.ellen@epa.gov*. For further information, contact Ellen Caldwell at (214) 665–7513 or fax 214.665.6689. The administrative record files for the 4 TMDLs are available for public inspection at this address as well. Documents from the administrative record files may be viewed at *http://www.epa.gov/region6/water/tmdl.htm*, or obtained by calling or writing Ms. Caldwell at the above address. Please contact Ms. Caldwell to schedule an inspection.

FOR FURTHER INFORMATION CONTACT: Ellen Caldwell at (214) 665–7513.

SUPPLEMENTARY INFORMATION: In 1996, two Louisiana environmental groups, the Sierra Club and Louisiana Environmental Action Network (plaintiffs), filed a lawsuit in Federal Court against the EPA, styled *Sierra Club, et al.* v. *Clifford, et al.*, No. 96–0527, (E.D. La.). Among other claims, plaintiffs alleged that EPA failed to establish Louisiana TMDLs in a timely manner. EPA proposes these TMDLs pursuant to a consent decree entered in this lawsuit.

EPA Seeks Comment on 4 TMDLs

By this notice EPA is seeking comment on the following 4 TMDLs for waters located within the Barataria river basin:

Subsegment	Waterbody name	Pollutant
020201	Bayou Des Allemands—Lac Des Allemands to Hwy. U.S. 90 (scenic)	Dissolved Oxygen.
020201	Bayou Des Allemands—Lac Des Allemands to Hwy. U.S. 90 (scenic)	Nutrients.
020303	Lake Cataouatche and Tributaries	Dissolved Oxygen.
020303	Lake Cataouatche and Tributaries	Nutrients.

EPA requests that the public provide to EPA any water quality related data and information that may be relevant to the calculations for the 4 TMDLs. EPA will review all data and information submitted during the public comment period and revise the TMDLs where appropriate. EPA will then forward the TMDLs to the Louisiana Department of Environmental Quality (LDEQ). The LDEQ will incorporate the TMDLs into its current water quality management plan.

Dated: November 22, 2004.

Jane B. Watson,

Acting Director, Water Quality Protection Division, Region 6.

[FR Doc. 04–26481 Filed 11–30–04; 8:45 am]

BILLING CODE 6560–50–P

FARM CREDIT SYSTEM INSURANCE CORPORATION

Farm Credit System Insurance Corporation Board; Regular Meeting

SUMMARY: Notice is hereby given of the regular meeting of the Farm Credit System Insurance Corporation Board (Board).

DATE AND TIME: The meeting of the Board will be held at the offices of the Farm Credit Administration in McLean, Virginia, on December 2, 2004, from 9 a.m. until such time as the Board concludes its business.

FOR FURTHER INFORMATION CONTACT: Jeanette C. Brinkley, Secretary to the Farm Credit System Insurance Corporation Board, (703) 883–4009, TTY (703) 883–4056.

ADDRESSES: Farm Credit System Insurance Corporation, 1501 Farm Credit Drive, McLean, Virginia 22102.

SUPPLEMENTARY INFORMATION: Parts of this meeting of the Board will be open to the public (limited space available), and parts will be closed to the public. In order to increase the accessibility to Board meetings, persons requiring assistance should make arrangements in advance. The matters to be considered at the meeting are:

Closed Session

- Report on System Performance

Open Session

Approval of Minutes

- September 16, 2004 (Regular Meeting)

Business Reports

- Financials
- Report on Insured Obligations
- Quarterly Report on Annual Performance Plan

New Business

- Premium Rates for 2005

Closed Session

- Proposed Audit Plan

Dated: November 29, 2004.

Jeanette C. Brinkley,

Secretary, Farm Credit System Insurance Corporation Board.

[FR Doc. 04–26573 Filed 11–29–04; 1:26 pm]

BILLING CODE 6710–01–P

FEDERAL MARITIME COMMISSION

Notice of Agreements Filed

The Commission hereby gives notice of the filing of the following agreements under the Shipping Act of 1984. Interested parties may obtain copies of agreements by contacting the Commission's Office of Agreements at 202–523–5793 or via e-mail at *tradeanalysis@fmc.gov*. Interested parties may submit comments on an agreement to the Secretary, Federal Maritime Commission, Washington, DC 20573, within 10 days of the date this notice appears in the **Federal Register**.

Agreement No.: 011877–001.

Title: Norasia/CMA–CGM Europe-USEC/USWC Slot Charter Agreement.

Parties: CMA CGM, S.A. and Norasia Container Lines Limited.

Filing Party: Walter H. Lion, Esq.; McLaughlin & Stern, LLP; 260 Madison Avenue; New York, NY 10016.

Synopsis: The agreement deletes the United States Pacific Coast from the scope of the agreement and modifies the terms of the slot purchase.

Agreement No.: 011689–008.

Title: Zim/CSCL Space Charter Agreement.

Parties: Zim Integrated Shipping Services, Ltd.; China Shipping Container Line Co., Ltd.; and China Shipping Container Lines (Hong Kong) Co., Ltd.

Filing Party: Brett M. Esber, Esq.; Blank Rome LLP; 600 New Hampshire Ave., NW.; Washington, DC 20037.

Synopsis: The amendment adds China Shipping Container Lines (Hong Kong) as a party to the agreement. The parties request expedited review.

By Order of the Federal Maritime Commission.

Dated: November 24, 2004.

Bryant L. VanBrakle,

Secretary.

[FR Doc. 04–26427 Filed 11–30–04; 8:45 am]

BILLING CODE 6730–01–P

FEDERAL RESERVE SYSTEM

Change in Bank Control Notices; Acquisition of Shares of Bank or Bank Holding Companies

The notificants listed below have applied under the Change in Bank Control Act (12 U.S.C. 1817(j)) and § 225.41 of the Board's Regulation Y (12 CFR 225.41) to acquire a bank or bank holding company. The factors that are considered in acting on the notices are set forth in paragraph 7 of the Act (12 U.S.C. 1817(j)(7)).

The notices are available for immediate inspection at the Federal Reserve Bank indicated. The notices also will be available for inspection at the office of the Board of Governors. Interested persons may express their views in writing to the Reserve Bank indicated for that notice or to the offices of the Board of Governors. Comments must be received not later than December 17, 2004.

A. Federal Reserve Bank of Minneapolis (Jacqueline G. Nicholas, Community Affairs Officer) 90 Hennepin Avenue, Minneapolis, Minnesota 55480–0291:

1. Bradley E. Bakken, St. Louis Park, Minnesota; to acquire control of Bakken Securities, Inc., Saint Louis Park, Minnesota, and thereby indirectly acquire voting shares of Citizens Independent Bank, Saint Louis Park, Minnesota.

Board of Governors of the Federal Reserve System, November 26, 2004.

Robert deV. Frierson,

Deputy Secretary of the Board.

[FR Doc. 04–26457 Filed 11–30–04; 8:45 am]

BILLING CODE 6210–01–S

FEDERAL RESERVE SYSTEM

Change in Bank Control Notices; Acquisition of Shares of Bank or Bank Holding Companies; Correction

This notice corrects a notice (FR Doc. 04-25773) published on page 67913 of the issue for Monday, November 22, 2004.

Under the Federal Reserve Bank of Kansas City heading, the entry for Embry W. Williams, Jr., Amarillo, Texas, is revised to read as follows:

1. Embry W. Williams, Jr., Amarillo, Texas; Embry W. Williams, III, Richardson, Texas; and James David Williams, Kerrville, Texas; to acquire voting shares of Union Bancshares, Inc., Clayton, New Mexico, and thereby indirectly acquire voting shares of The First National Bank of New Mexico, Clayton, New Mexico.

Comments on this application must be received by December 6, 2004.

Board of Governors of the Federal Reserve System, November 26, 2004.

Robert deV. Frierson,

Deputy Secretary of the Board.

[FR Doc. 04–26458 Filed 11–30–04; 8:45 am]

BILLING CODE 6210–01–S

FEDERAL RESERVE SYSTEM

Notice of Proposals to Engage in Permissible Nonbanking Activities or to Acquire Companies that are Engaged in Permissible Nonbanking Activities

The companies listed in this notice have given notice under section 4 of the Bank Holding Company Act (12 U.S.C. 1843) (BHC Act) and Regulation Y (12 CFR Part 225) to engage *de novo*, or to acquire or control voting securities or assets of a company, including the companies listed below, that engages either directly or through a subsidiary or other company, in a nonbanking activity that is listed in § 225.28 of Regulation Y (12 CFR 225.28) or that the Board has determined by Order to be closely related to banking and permissible for bank holding companies. Unless otherwise noted, these activities will be conducted throughout the United States.

Each notice is available for inspection at the Federal Reserve Bank indicated. The notice also will be available for inspection at the offices of the Board of Governors. Interested persons may express their views in writing on the question whether the proposal complies with the standards of section 4 of the BHC Act. Additional information on all bank holding companies may be obtained from the National Information Center website at *www.ffiec.gov/nic/*.

Unless otherwise noted, comments regarding the applications must be received at the Reserve Bank indicated or the offices of the Board of Governors not later than December 27, 2004.

A. Federal Reserve Bank of Atlanta (Sue Costello, Vice President) 1000 Peachtree Street, N.E., Atlanta, Georgia 30303:

1. Firstrust Corporation, New Orleans, Louisiana; to acquire Central Bank of Savings, Winona, Mississippi, and thereby engage in operating a savings association, pursuant to section 225.28(b)(4)(ii) of Regulation Y.

Board of Governors of the Federal Reserve System, November 26, 2004.

Robert deV. Frierson,

Deputy Secretary of the Board.

[FR Doc. 04–26459 Filed 11–30–04; 8:45 am]

BILLING CODE 6210–01–S

FEDERAL RESERVE SYSTEM

[Docket No. OP–1191]

Policy on Payments System Risk

AGENCY: Board of Governors of the Federal Reserve System.

ACTION: Notice.

SUMMARY: The Board has adopted several revisions to its Policy on Payments System Risk (PSR policy). Specifically, the Board revised its expectations for risk management in payments and securities settlement systems as previously set out in part II of the PSR policy, Policies for Private-Sector Systems, and expanded the scope of this part to cover Federal Reserve payments and securities settlement systems. The Board also reorganized the policy such that the more general Risk Management in Payments and Securities Settlement Systems now constitutes part I of the policy, while Federal Reserve Daylight Credit Policies constitute part II. Finally, the Board has deleted part III of the policy, entitled ''Other Policies.''

DATES: Revisions described in this notice will take effect on January 2, 2005.

FOR FURTHER INFORMATION CONTACT: Jeff Stehm, Assistant Director (202) 452–2217, or Doug Conover, Senior Analyst (202) 452–2887, Division of Reserve Bank Operations and Payment Systems; for the hearing impaired only: Telecommunications Device for the Deaf, (202) 263–4869.

SUPPLEMENTARY INFORMATION

I. Background

On April 26, 2004, the Board requested comment on proposed changes to part II of its Policy Statement on Payments System Risk addressing risk management in payments and securities settlement systems (69 FR 22512). Key aspects of the proposal included an expansion of the policy's scope to include the Federal Reserve Banks' (Reserve Banks) payments and securities settlement services, revised general risk management expectations for all systems subject to the policy, and the incorporation of the *Core Principles for Systemically Important Payment Systems* (Core Principles) and *Recommendations for Securities Settlement Systems* (Recommendations) as the Board's minimum standards for systemically important systems.[1] The proposed changes did not affect part I of the PSR policy, Federal Reserve Daylight Credit Policies, other than to renumber it as part II.

The Board proposed these revisions to update the policy in light of current industry and supervisory risk-management approaches and the recent publication of new international risk-management standards for payments and securities settlement systems. Over the course of several years, the Federal Reserve has worked with other central banks and securities regulators to develop standards to strengthen payments and securities settlement infrastructures. These efforts initially produced the Lamfalussy Minimum Standards, which were incorporated into the Board's PSR policy in 1994.[2] More recently, this work resulted in the publication of the Core Principles and the Recommendations. The Core Principles extend and replace the Lamfalussy Minimum Standards, while the Recommendations provide, for the first time, explicit standards for securities settlement systems.[3]

In addition to establishing specific standards, however, the Core Principles and Recommendations call for central banks to state clearly their roles and policies regarding payments and securities settlement systems, assess compliance with the Core Principles and the Recommendations when overseeing relevant systems, and coordinate with other authorities in overseeing systems. Moreover, the Core Principles and Recommendations are intended to apply to systems operated by central banks as well as the private sector. The policy revisions proposed by the Board in April were designed to meet these and other expectations.

II. Summary of Comments and Analysis

The Board received eight comments on the proposed policy—three from private-sector payment system operators, two from industry associations, two from commercial banks, and one from the Federal Reserve Bank of Richmond. Comments generally supported the substantive policy revisions set out in the proposal, but varied in regard to the Board's series of specific questions on the policy threshold, the definition of a system, the general policy expectations, and the criteria for determining a systemically important system. Several commenters also discussed risks related to third-party access in ACH systems.

The final policy retains all substantive aspects of the proposed policy. The final policy, however, includes several minor changes that address specific comments. The final policy also includes other editorial and technical corrections, including several changes to make the new introduction consistent with recent revisions to the Federal Reserve Daylight Credit Policies, as published on September 28, 2004 (69 FR 57917). Finally, in an action not proposed in April, the Board also deleted part III of the policy.

Policy Threshold

Five of the eight commenters offered specific comments on the $5 billion policy threshold. Three commenters suggested that the threshold be modified to be more inclusive by lowering the threshold or by suggesting additional quantitative or qualitative criteria. One commenter stated that the $5 billion threshold would leave out certain unnamed systems that should be covered by the policy for reasons of both systemic risk and competitive equity. Several commenters specifically supported the threshold, pointing out the current approach would ''result in a level playing field'' and ''ensure a consistent regulatory approach.''

In contrast, one commenter suggested that the threshold be modified to be less inclusive, specifically by raising the threshold to $10 billion. This commenter cited the original intent of the $5 billion threshold as described in January 1999 as exempting from the policy smaller systems that are not likely to ''pose systemic risks or other significant risk concerns.''[4] The commenter argued that the $5 billion threshold was appropriate in 1999, but due to economic growth, the level is no longer appropriate, as some systems with gross settlement near $5 billion per day still pose no systemic risk concerns. This commenter and one other suggested that the threshold be increased periodically.

The Board agrees with the opinions of several commenters who pointed out the value of a simple policy threshold in ensuring a consistent approach and transparent application of the policy. In

[1] The Core Principles were developed by the Committee on Payment and Settlement Systems (CPSS) of the central banks of the Group of Ten countries, and the Recommendations were developed by the CPSS in conjunction with the Technical Committee of the International Organization of Securities Commissions (IOSCO). The full reports on the Core Principles and the Recommendations are available at *http://www.bis.org.*

[2] 59 FR 67534, Dec. 29, 1994. The Lamfalussy Minimum Standards were set out in the ''Report of the Committee on Interbank Netting Schemes of the Central Banks of the Group of Ten Countries,'' published by the Bank for International Settlements in November 1990.

[3] Both sets of standards are part of the Financial Stability Forum's Compendium of Standards that have been widely recognized and endorsed by U.S. authorities as integral to strengthening global financial stability. Both sets of standards were published by the relevant committees for public comment before being adopted in their final form.

[4] 63 FR 34888, June 26, 1998.

fact, the $5 billion gross settlement threshold was adopted in response to industry comments in 1998 that largely opposed the use of more complex formulas in favor of a simple, numerical threshold. With regard to the absolute level of the threshold, the Board continues to believe that the $5 billion level appropriately eliminates any administrative burden of complying with the policy for those systems that are unlikely to pose significant risk concerns. The Board sees no reason to modify the existing threshold at this time.

Definition of a System

Of the four commenters that specifically addressed the definition of ''system'' as set out in proposed policy, three agreed that the definition was ''reasonable and appropriate,'' especially the exemption for bilateral relationships, such as in traditional correspondent banking. One commenter, however, suggested that the Board clarify the relationship between the ''general definition'' of a system and the three characteristics typically ''embodied'' by such systems. The final policy explains how the Board may use these characteristics in determining whether a particular arrangement meets the policy's definition of a system.

General Policy Expectations

All eight commenters expressed support for the general risk management expectations set out in part B of the proposed policy. Several offered strong support for these revisions. Two commenters raised questions about whether risks related to third-party access to payment systems, especially ACH systems, would fall under the general risk-management expectations (these comments are discussed below).

One commenter sought additional clarity on how systems should assess their dependencies and inter-relationships with other payment and securities settlement systems. This same commenter suggested that, where appropriate, oversight efforts associated with the revised policy be conducted through existing bank supervisory programs, citing a minimization in regulatory burden. The final policy elaborates on the Board's expectation that a system understand the risks posed by its various relationships with other systems, and clarifies the Board's intent to minimize unnecessary burden on systems subject to the policy, including coordinating, where possible, any assessments of compliance with the policy with other supervisory attentions to a system. The final policy also clarifies that systems currently falling below the $5 billion threshold for applying the policy, though not subject to the policy, are nonetheless encouraged to implement a sound risk-management framework.

Criteria for Systemic Importance

Four of the eight commenters suggested modifications to the criteria for determining ''systemically important'' systems that were set out in the proposed policy for assessing whether the Core Principles or Recommendations would be applicable to a payments or securities settlement system. Two commenters suggested that the criteria needed more clarity so that systems and their participants can know whether a particular system would be considered systemically important. These same commenters also suggested that the policy include some indicators that suggest when a system is not systemically important. One commenter suggested the inclusion of a seventh criterion, whether ''a failure of the system would cause significant or extended loss of investor or consumer confidence.'' A fourth commenter suggested that the policy clarify whether a system would be considered systemically important if it met only one of the six criteria.

The Board decided to retain the six proposed criteria for systemic importance. These criteria are based upon the description of ''systemically important systems'' provided in the Core Principles, adjusted to be applicable to securities settlement systems and to provide consistency with the criteria previously set out in the policy for applying the Lamfalussy Standards. Regarding the suggestion that the policy include a list of exclusions or characteristics of systems that are not systemically important, the Board believed that this type of change could introduce unnecessary conflicts with the existing criteria. On whether to add a seventh explicit criterion regarding investor or consumer confidence, the Board believes that these changes would unnecessarily broaden the definition of systemically important in a potentially ambiguous manner, and with possible unintended consequences. For example, such a criterion may suggest that many retail systems, such as debit card, credit card, and ACH systems, be considered systemically important regardless of any limited potential to spread credit and liquidity shocks through the financial system.

To address commenters' concerns about transparency regarding whether the Board considers a particular system to be systemically important for purposes of the PSR policy, the final policy states that the Board will separately inform each system subject to the policy as to whether they are or are not considered systemically important. This revision retains necessary flexibility in the criteria for systemic importance, but provides clarity for each system subject to the policy as to whether the Board expects them to meet the standards for systemically important systems.

Third-Party Access

Three commenters focused their comments on the risks regarding ''third-party access'' to ACH systems. Two of these organizations offered specific suggestions on how to address third-party risks in the ACH. Both suggested that the policy include a requirement that all third-party arrangements be subject to the approval of the sponsoring institution's board of directors or other senior management body. One of the two suggested that ACH operators provide tools for institutions to manage these risks, and controls that should, at a minimum, include gross debit limits. The third commenter did not make these specific suggestions and instead suggested that the Board request comment on a ''specific proposal'' to address these risks.

The Federal Reserve is interested in risks related to third-party access in ACH networks, and through the Federal Reserve Banks' role as an ACH operator, is taking steps to address these risks. For example, the Federal Reserve Bank presidents recently circulated a letter to depository institutions outlining the risks and possible risk mitigation techniques related to ACH debit originations, including third-party originators. The Federal Reserve Banks also have offered to work with ACH participants and the ACH rule-making body to discuss these risks. The Federal Reserve Banks are also examining possible enhancements to FedACH that could strengthen depository institutions' controls over ACH activity settling through their accounts.

In recent years, however, the Board specifically moved away from addressing outsourcing and third-party access risks in the context of the PSR policy. In August 1995, the Board sought comment on the benefits and costs of adopting third-party access provisions for ACH credit transfers in the PSR policy.[5] The Board's analysis of this issue, however, indicated that the costs, complexity, and operational effect of potential changes outweighed the risk reduction benefits. An ACH third-party access policy was never adopted.

[5] 60 FR 42413, Aug. 15, 1995.

Moreover, in April 2001, the Board rescinded the third-party Fedwire access section of the PSR policy, adopted in 1987, stating that such access, when properly managed by depository institutions, poses little additional risk to the Federal Reserve and does not warrant the administrative burden imposed by the third-party access policy.[6] The Board also stated that as part of the ongoing supervisory process, banking organizations are expected to address and manage risks that may arise out of third-party arrangements.[7]

Deletion of Part III

Given the changes to the policy that the Board is adopting in this notice and the changes adopted in recent revisions to the policy concerning Federal Reserve Daylight Credit Policies, the Board has decided to delete part III of the PSR policy, entitled Other Policies. Part III encourages, but does not require, depository institutions to use rollovers and continuing contracts in federal funds and Eurodollars to minimize their use of daylight credit in their Federal Reserve accounts. The Board adopted this aspect of the policy in 1989 as guidance for depository institutions. Given the incentives to manage daylight credit provided by the implementation of daylight overdraft fees in 1994, the Board believes that depository institutions have the appropriate incentives to incorporate the practices encouraged in part III into their daylight credit management procedures, and that specific guidance in this area is no longer necessary.

IV. Regulatory Flexibility Act Analysis

The Board has determined that these revisions to the PSR policy would not have a significant economic impact on a substantial number of small entities. The policy requires payments and securities settlement systems to address material risks in their systems. The policy applies to relatively large systems, *i.e.*, those that expect to settle an aggregate gross value exceeding $5 billion on any day during the next twelve-month period. Thus, the policy is designed to minimize regulatory burden on smaller systems that do not raise material risks. Although small financial institutions may participate in payments or securities settlement systems that are subject to the policy, the compliance burden largely falls on system operators and not on individual participants.

V. Competitive Impact Analysis

The Board has established procedures for assessing the competitive impact of rule or policy changes that have a substantial impact on payments system participants.[8] Under these procedures, the Board will assess whether a change would have a direct and material adverse effect on the ability of other service providers to compete effectively with the Federal Reserve in providing similar services due to differing legal powers or constraints, or due to a dominant market position of the Federal Reserve deriving from such differences. If no reasonable modifications would mitigate the adverse competitive effects, the Board will determine whether the anticipated benefits are significant enough to proceed with the change despite the adverse effects. The PSR policy provides that Reserve Bank payments and securities settlement systems will be treated similarly to private-sector systems and thus should have no material adverse effect on the ability of other service providers to compete effectively with the Federal Reserve Banks in providing payments and securities settlement services.

VI. Paperwork Reduction Act

In accordance with the Paperwork Reduction Act of 1995 (44 U.S.C. ch. 3506; 5 CFR part 1320 Appendix A.1), the Board has reviewed the policy under the authority delegated to the Board by the Office of Management and Budget. No collections of information pursuant to the Paperwork Reduction Act are contained in the revisions to the PSR policy.

VII. Federal Reserve Policy on Payments System Risk

The PSR policy is revised, effective January 2, 2005, to read as follows:

Introduction
Risks in Payments and Securities Settlement Systems
I. Risk Management in Payments and Securities Settlement Systems
A. Scope
B. General Policy Expectations
C. Systemically Important Systems
1. Standards for Systemically Important Payments Systems
2. Standards for Systemically Important Securities Settlement Systems
II. Federal Reserve Daylight Credit Policies
A. Daylight Overdraft Definition and Measurement
B. Pricing
C. Net Debit Caps
1. Definition
2. Cap Categories
a. Self-Assessed
b. *De minimis*
c. Exempt-From-Filing
d. Zero
3. Capital measure
a. U.S.-Chartered Institutions
b. U.S. Branches and Agencies of Foreign Banks
D. Collateralized Capacity
E. Special Situations
1. Edge and Agreement Corporations
2. Bankers' Banks
3. Limited-Purpose Trust Companies
4. Government-Sponsored Enterprises and International Organizations
5. Problem Institutions
F. Monitoring
1. Ex Post
2. Real Time
3. Multi-District Institutions
G. Transfer-Size Limit on Book-Entry Securities

Introduction

Payments and securities settlement systems are critical components of the nation's financial system. The smooth functioning of these systems is vital to the financial stability of the U.S. economy. Given the importance of these systems, the Board has developed this policy to address the risks that payments and securities settlement systems present to the financial system and to the Federal Reserve Banks (Reserve Banks).

In adopting this policy, the Board's objectives are to foster the safety and efficiency of payments and securities settlement systems. These policy objectives are consistent with (1) the Board's long-standing objectives to promote the integrity, efficiency, and accessibility of the payments mechanism; (2) industry and supervisory methods for risk management; and (3) internationally accepted risk management standards and practices for systemically important payments and securities settlement systems.[1]

Part I of this policy sets out the key risk management expectations of the Board that public- and private-sector payments and securities settlement systems should meet in the design and operation of those systems. Under the policy, all payments and securities settlement systems that expect to settle an aggregate gross value exceeding $5 billion on any day during the next twelve months are expected to implement a risk management

[6] 66 FR 19165, April 13, 2001.

[7] Federal Reserve and other FFIEC supervisors have issued guidance concerning third-party access risk, and continue to work to identify specific types of ACH flows and businesses that may pose special risks to depository institutions. See SR Ltr. 01–16 (July 3, 2001), SR Ltr. 00–4 (February 29, 2000).

[8] These procedures are described in ''The Federal Reserve in the Payments System,'' as revised in March 1990 (55 FR 11648, March 29, 1990).

[1] For the Board's long-standing objectives in the payments system, *see* ''The Federal Reserve in the Payments System,'' September 2001, FRRS 9–1550, available at *http://www.federalreserve.gov/paymentsystems/pricing/frpaysys.htm*.

framework that is appropriate for the risks they pose to the system operator, system participants, and the financial system more broadly. Systemically important payments and securities settlement systems are also expected to meet more specific standards based upon the Core Principles for Systemically Important Payments Systems (Core Principles) and the Recommendations for Securities Settlement Systems (Recommendations), respectively.[2]

Part II of this policy governs the provision of intraday or ''daylight'' credit in accounts at the Reserve Banks and sets out the general methods used by the Reserve Banks to control their intraday credit exposures. Under this part, the Board expects institutions to manage their Federal Reserve accounts effectively and use Federal Reserve daylight credit efficiently and appropriately, in accordance with this policy.[3] Although some intraday credit may be necessary, the Board expects that, as a result of this policy, relatively few institutions will consistently rely on significant amounts of intraday credit supplied by the Federal Reserve to conduct their business. The Board will continue to monitor the effects of its daylight credit policies on the payments system.

Risks in Payments and Securities Settlement Systems

The basic risks in payments and securities settlement systems are credit risk, liquidity risk, operational risk, and legal risk. In the context of this policy, these risks are defined as follows.[4]

Credit Risk. The risk that a counterparty will not settle an obligation for full value either when due, or anytime thereafter.

Liquidity Risk. The risk that a counterparty will not settle an obligation for full value when due.

Operational Risk. The risk of loss resulting from inadequate or failed internal processes, people, and systems, or from external events. This type of risk includes various physical and information security risks.

Legal Risk. The risk of loss because of the unexpected application of a law or regulation or because a contract cannot be enforced.

These risks arise between financial institutions as they settle payments and securities transactions and must be managed by institutions, both individually and collectively.[5] [6] Multilateral payments and securities settlement systems, in particular, may increase, shift, concentrate, or otherwise transform risks in unanticipated ways. These systems also may pose systemic risk to the financial system where the inability of a system participant to meet its obligations when due may cause other participants to be unable to meet their obligations when due. The failure of one or more participants to settle their payments or securities transactions, in turn, could create credit or liquidity problems for other participants, the system operator, or other financial institutions. Systemic risk might lead ultimately to a disruption in the financial system more broadly or undermine public confidence in the nation's financial infrastructure.

These risks stem, in part, from the multilateral and time-sensitive credit and liquidity interdependencies among financial institutions. These interdependencies often create complex transaction flows that, in combination with a system's design, can lead to significant demands for intraday credit, either on a regular or extraordinary basis. Some level of intraday credit is appropriate to ensure the smooth functioning of payments and securities settlement systems. To the extent that financial institutions or the Reserve Banks are the direct or indirect source of such intraday credit, they may face a direct risk of loss if daylight credit is not extinguished as planned. In addition, measures taken by Reserve Banks to limit their intraday credit exposures may shift some or all of the associated risks to private-sector systems.

The smooth functioning of payments and securities settlement systems is also critical to certain public policy objectives in the areas of monetary policy and banking supervision. The effective implementation of monetary policy, for example, depends on both the orderly settlement of open market operations and the efficient distribution of reserve balances throughout the banking system via the money market and payments system. Likewise, supervisory objectives regarding the safety and soundness of depository institutions must take into account the risks payments and securities settlement systems pose to depository institutions that participate directly or indirectly in, or provide settlement, custody, or credit services to, such systems.

Through this policy, the Board expects financial system participants, including the Reserve Banks, to manage appropriately the settlement and systemic risks arising in payments and securities settlement systems, consistent with the smooth operation of the financial system. This policy is designed to fulfill that aim by (1) informing all financial system participants and system operators of the basic risks that arise in the settlement process, and encouraging the management of these risks (2) describing the Board's general expectations for risk management in payment and securities settlement systems subject to this policy, (3) providing explicit risk management standards for systemically important systems, and (4) establishing the policy conditions governing the provision of Federal Reserve intraday credit to account holders. The Board's adoption of this policy in no way diminishes the primary responsibilities of financial system participants generally and settlement system operators, participants, and Federal Reserve accountholders more specifically, to address the risks that may arise through their operation of, or participation in, payments and securities settlement systems.

I. Risk Management in Payments and Securities Settlement Systems

This part sets out the Board's expectations regarding the management of risk in payments and securities settlement systems, including those operated by the Reserve Banks. The Board will be guided by this part, in conjunction with relevant laws and other Federal Reserve policies, when (1)

[2] The Core Principles were developed by the Committee on Payment and Settlement Systems of the central banks of the Group of Ten countries (CPSS) and the Recommendations were developed by the CPSS in conjunction with the Technical Committee of the International Organization of Securities Commissions (IOSCO). The full reports on the Core Principles and the Recommendations are available at *http://www.bis.org.*

[3] In part II of this policy, the term ''institution'' will be used to refer to institutions defined as ''depository institutions'' in 12 U.S.C. 461(b)(1)(A), U.S. branches and agencies of foreign banking organizations, Edge and agreement corporations, and bankers' banks, limited purpose trust companies, government-sponsored enterprises, and international organizations, unless the context indicates a different reading.

[4] These definitions of credit risk, liquidity risk, and legal risk are based upon those presented in the Core Principles and the Recommendations. The definition of operational risk is based on the Basel Committee on Banking Supervision's ''Sound Practices for the Management and Supervision of Operational Risk.'' See these publications at *http://www.bis.org* for a fuller discussion of these risks.

[5] The term ''financial institution,'' as generally used in part I of this policy, includes organizations, such as depository institutions, securities dealers, and other institutions, that act as intermediaries in financial markets and engage in financial activities for themselves and their customers.

[6] Several existing regulatory and bank supervision guidelines and policies also are directed at institutions' management of the risks posed by interbank payments and settlement activity. For example, Federal Reserve Regulation F (12 CFR part 206) directs insured depository institutions to establish policies and procedures to avoid excessive exposures to any other depository institutions, including exposures that may be generated through the clearing and settlement of payments.

supervising state member banks, bank holding companies, and clearinghouse arrangements, including the exercise of authority under the Bank Service Company Act, where applicable,[7] (2) setting the terms and conditions for the use of Federal Reserve payments and settlement services by system operators and participants, (3) developing and applying policies for the provision of intraday credit to Reserve Bank account holders, and (4) interacting with other domestic and foreign financial system authorities on payments and settlement risk management issues. The Board's adoption of this policy is not intended to exert or create new supervisory or regulatory authority over any particular class of institutions or arrangements where the Board does not currently have such authority.

Where the Board does not have direct or exclusive supervisory or regulatory authority over systems covered by this policy, it will work with other domestic and foreign financial system authorities to promote effective risk management in payments and securities settlement systems. The Board encourages other relevant authorities to consider the principles embodied in this policy when evaluating the payments and securities settlement risks posed by and to the systems and individual system participants that they oversee, supervise, or regulate. In working with foreign financial system authorities, the Board will be guided by Responsibility D of the Core Principles, Recommendation 18 of the Recommendations, and the ''Principles for Cooperative Central Bank Oversight of Cross-border and Multi-currency Netting and Settlement Schemes'' and related documents.[8] The Board believes these international principles provide an appropriate framework for cooperating with foreign authorities to address risks in cross-border, multicurrency, and, where appropriate, offshore payments and securities settlement systems.

A. Scope

This policy applies to public- and private-sector payments and securities settlement systems that expect to settle a daily aggregate gross value of U.S. dollar-denominated transactions exceeding $5 billion on any day during the next 12 months.[9] For purposes of this policy, a payments or securities settlement system is considered to be a multilateral arrangement (three or more participants) among financial institutions for the purposes of clearing, netting, and/or settling payments or securities transactions among themselves or between each of them and a central party, such as a system operator or central counterparty.[10] In determining whether a particular arrangement meets this definition, the Board may consider, but will not be limited to, whether the arrangement exhibits one or more of the following characteristics: (1) A set of rules and procedures, common to all participants, that govern the clearing or settlement of payments or securities transactions, (2) a common technical infrastructure for conducting the clearing or settlement process, and (3) a risk management or capital structure where at least some losses would be borne by participants rather than the arrangement's operator, central counterparty or guarantor, or shareholders or owners.

These systems may be organized, located, or operated within the United States (domestic systems), outside the United States (offshore systems), or both (cross-border systems) and may involve other currencies in addition to the U.S. dollar (multicurrency systems). The policy also applies to any system based or operated in the United States that engages in the settlement of non-U.S. dollar transactions if that system would be otherwise subject to the policy.[11]

This policy does not apply to bilateral relationships between financial institutions and their customers, such as traditional correspondent banking and correspondent securities clearing arrangements, including, for example, government securities clearing services provided to securities dealers by banks or correspondent clearing services provided by broker-dealers. The Board believes that these relationships do not constitute ''a system'' for purposes of this policy and that relevant safety and soundness issues associated with these relationships are more appropriately addressed through the supervisory and regulatory process. This policy also does not apply to clearance or settlement systems for exchange-traded futures and options that fall under the oversight of the Commodities and Futures Trading Commission or the Securities and Exchange Commission.

B. General Policy Expectations

The Board expects payments and securities settlement systems within the scope of this policy to implement a risk management framework appropriate for the risks the system poses to the system operator, system participants, and other relevant parties as well as the financial system more broadly. A risk management framework is the set of objectives, policies, arrangements, procedures, and resources that a system employs to limit and manage risk. While there are a number of ways to structure a sound risk management framework, all frameworks should:

- Clearly identify risks and set sound risk management objectives;
- Establish sound governance arrangements;
- Establish clear and appropriate rules and procedures; and,
- Employ the resources necessary to achieve the system's risk management objectives and implement effectively its rules and procedures.

The Board also expects any system it deems to be systemically important both to establish a sound risk management framework and to comply with the more detailed standards set out in Section I.C. The Board will seek to understand how and whether systems subject to this policy achieve a sound risk management framework and, if relevant, meet the detailed standards for systemically important systems. In addition, the Board encourages systems with settlement activity below the $5 billion threshold, though not subject to this policy, to consider implementing some or all of the elements of a sound risk management framework.[12]

[7] 12 U.S.C. 1861 *et seq.*

[8] The ''Principles for Cooperative Central Bank Oversight and Multi-currency Netting and Settlement Schemes'' are set out in the ''*Report of the Committee on Interbank Netting Schemes of the central banks of the Group of Ten countries'' (Lamfalussy Report).* The Lamfalussy Report is available at *http://www.bis.org/cpss/cpsspubl.htm.*

[9] The 'next' twelve-month period is determined by reference to the date a determination is being made as to whether the policy applies to a particular system. Aggregate gross value of U.S dollar-denominated transactions refers to the total dollar value of individual U.S. dollar transactions settled in the system which also represents the sum of total U.S. dollar debits (or credits) to all participants prior to or in absence of any netting of transactions.

[10] A system includes all of the governance, management, legal and operational arrangements used to effect settlement as well as the relevant parties to such arrangements, such as the system operator, system participants, and system owners. The types of systems that may fall within the scope of this policy include, but are not limited to, large-value funds transfer systems, automated clearinghouse (ACH) systems, check clearinghouses, and credit and debit card settlement systems, as well as central counterparties, clearing corporations, and central depositories for securities transactions. For purposes of this policy, the system operator is the entity that manages and oversees the operations of the system. For the definition of financial institution, *see* footnote 5.

[11] The daily gross value threshold will be calculated on a U.S. dollar equivalent basis.

[12] The Board may ask a system approaching the policy threshold to provide limited information on trends in its gross settlement activity to determine when that system might become subject to the policy. Systems approaching the threshold should anticipate meeting the expectations of this policy.

Identify Risks and Set Sound Risk Management Objectives. The first element of a sound risk management framework is the clear identification of all risks that have the potential to arise in or result from the system's settlement process and the development of clear and transparent objectives regarding the system's tolerance for and management of such risks.

System operators should identify the forms of risk present in their system's settlement process as well as the parties posing and bearing each risk. In particular, system operators should identify the risks posed to and borne by themselves, the system participants, and other key parties such as a system's settlement banks, custody banks, and third-party service providers. System operators should also analyze whether risks might be imposed on other external parties and the financial system more broadly.

In addition, system operators should analyze how risk is transformed or concentrated by the settlement process. System operators should also consider the possibility that attempts to limit one type of risk could lead to an increase in another type of risk. Moreover, system operators should be aware of risks that might be unique to certain instruments, participants, or market practices. System operators should also analyze how risks are correlated among instruments or participants.[13]

Based upon its clear identification of risks, a system should establish its risk tolerance, including the levels of risk exposure that are acceptable to the system operator, system participants, and other relevant parties. The system operator should then set risk management objectives that clearly allocate acceptable risks among the relevant parties and set out strategies to manage this risk. Risk management objectives should be consistent with the objectives of this policy, the system's business purposes, and the type of instruments and markets for which the system clears and settles. Risk management objectives should also be communicated to and understood by both the system operator's staff and system participants.

System operators should re-evaluate their risks in conjunction with any major changes in the settlement process or operations, the instruments or transactions settled, a system's rules or procedures, or the relevant legal and market environments. Systems should review their risk management objectives regularly to ensure that they are appropriate for the risks posed by the system, continue to be aligned with the system's purposes, remain consistent with this policy, and are being effectively adhered to by the system operator and participants.

Sound Governance Arrangements. Systems should have sound governance arrangements to implement and oversee their risk management frameworks. The responsibility for sound governance rests with a system operator's board of directors or similar body and with the system operator's senior management. Governance structures and processes should be transparent; enable the establishment of clear risk management objectives; set and enforce clear lines of responsibility and accountability for achieving these objectives; ensure that there is appropriate oversight of the risk management process; and enable the effective use of information reported by the system operator's management, internal auditors, and external auditors to monitor the performance of the risk management process.[14] Individuals responsible for governance should be qualified for their positions, understand their responsibilities, and understand their system's risk management framework. Governance arrangements should also ensure that risk management information is shared in forms, and at times, that allow individuals responsible for governance to fulfill their duties effectively.

Clear and Appropriate Rules and Procedures. Systems should implement rules and procedures that are appropriate and sufficient to carry out the system's risk management objectives and that have a well-founded legal basis. Such rules and procedures should specify the respective responsibilities of the system operator, system participants, and other relevant parties. Rules and procedures should establish the key features of a system's settlement and risk management design and specify clear and transparent crisis management procedures and settlement failure procedures, if applicable.[15]

Employ Necessary Resources. Systems should ensure that the appropriate resources and processes are in place to allow them to achieve their risk management objectives and effectively implement their rules and procedures. In particular, the system operator's staff should have the appropriate skills, information, and tools to apply the system's rules and procedures and achieve the system's risk management objectives. System operators should also ensure that their facilities and contingency arrangements, including any information system resources, are sufficient to meet their risk management objectives.[16]

The Board recognizes that payments and securities settlement systems differ widely in terms of form, function, scale, and scope of activities and that these characteristics result in differing combinations and levels of risks. Thus, the exact features of a system's risk management framework should be tailored to the risks of that system. The Board also recognizes that the specific features of a risk management framework may entail trade-offs between efficiency and risk reduction and that payments and securities settlement systems will need to consider these trade-offs when designing appropriate rules and procedures. In considering such trade-offs, however, it is critically important that systems take into account the costs and risks that may be imposed on all relevant parties, including parties with no direct role in the system.

To determine whether a system's current or proposed risk management framework is consistent with this policy, the Board will seek to understand how a system achieves the four elements of a sound risk management framework set out above. In this context, it may be necessary for the Board to obtain information from system operators regarding their risk management framework, risk management objectives, rules and procedures, significant legal analyses, general risk analyses, analyses of the credit and liquidity effects of settlement disruptions, business continuity plans, crisis management procedures, and

[13] Where systems have inter-relationships with or dependencies on other systems, system operators should also analyze whether and to what extent any cross-system risks arise and who bears them. Examples of such dependencies include, but are not limited to, financial and legal relationships, such as cross-margining, cross-collateralization, or cross-guarantees, operational relationships, such as shared platforms or networks, inter-system links to move transactions between systems, and tiered settlement dependencies (*e.g.* reliance on a second system to settle net obligations).

[14] The internal audit function should be independent of those responsible for day-to-day operational and other business functions.

[15] Examples of key features that might be specified in a system's rules and procedures are controls to limit participant-based risks, such as membership criteria based on participants' financial and operational health, limits on settlement exposures, and the procedures and resources to hedge, margin, or collateralize settlement exposures. Other examples of key features might be business continuity requirements and loss allocation procedures.

[16] Such arrangements may also be subject to various supervisory guidelines, such as the ''Interagency Paper on Sound Practices to Strengthen the Resilience of the U.S. Financial System.'' (68 FR 17809, April 11, 2003)

other relevant documentation.[17] It may also be necessary for the Board to obtain data or statistics on system activity on an ad-hoc or ongoing basis. All information provided to the Federal Reserve for the purposes of this policy will be handled in accordance with all applicable Federal Reserve policies on information security, confidentiality, and conflicts of interest. In seeking to obtain information and in determining whether a system's risk management framework is consistent with this policy, the Board intends to minimize unnecessary burden on systems, and will coordinate its activities, if practicable, with supervisory attentions to the system.

C. Systemically Important Systems

In addition to establishing a risk management framework that includes the key elements described above, the Board expects systemically important payments and securities settlement systems to comply with the detailed standards set out in this section.[18] To determine whether a system is systemically important for purposes of this policy, the Board may consider, but will not be limited to, one or more of the following factors:

- Whether the system has the potential to create significant liquidity disruptions or dislocations should it fail to perform or settle as expected;
- Whether the system has the potential to create large credit or liquidity exposures relative to participants' financial capacity;
- Whether the system settles a high proportion of large-value transactions;
- Whether the system settles transactions for critical financial markets; [19]
- Whether the system provides settlement for other systems;
- Whether the system is the only system or one of a very few systems for settlement of a given financial instrument.

Systemically important systems are expected to meet specific risk management standards because of their potential to cause major disruptions in the financial system. The Board, therefore, expects systemically important payments systems to comply with the standards listed in section I.C.1. Securities settlement systems of systemic importance are expected to comply with the standards listed in section I.C.2. Some systemically important systems, however, may present an especially high degree of systemic risk, by virtue of their high volume of large-value transactions or central role in the operation of critical financial markets. Because all systems are expected to employ a risk management framework that is appropriate for their risks, the Board may expect these systems to exceed the standards set out below.

The Board acknowledges that payments and securities settlement systems vary in terms of the range of instruments they settle and markets they serve. It also recognizes that systems may operate under different legal and regulatory constraints and within particular market infrastructures or institutional frameworks. The Board will consider these factors when assessing how a systemically important system addresses a particular standard.

The Board's standards for systemically important payments and securities settlement systems are based, respectively, on the Core Principles and the Recommendations. The Core Principles and the Recommendations are two examples of recent initiatives pursued by the international financial community to strengthen the global financial infrastructure.[20] The Federal Reserve worked closely with other central banks to develop and draft the Core Principles and with other central banks and securities regulators to develop and draft the Recommendations. These standards are part of the Financial Stability Forum's Compendium of Standards that have been widely recognized, supported, and endorsed by U.S. authorities as integral to strengthening the stability of the financial system.

1. Standards for Systemically Important Payments Systems

1. The system should have a well-founded legal basis under all relevant jurisdictions.
2. The system's rules and procedures should enable participants to have a clear understanding of the system's impact on each of the financial risks they incur through participation in it.
3. The system should have clearly defined procedures for the management of credit risks and liquidity risks, which specify the respective responsibilities of the system operator and the participants and which provide appropriate incentives to manage and contain those risks.
4. The system should provide prompt final settlement on the day of value, preferably during the day and at a minimum at the end of the day.
5. A system in which multilateral netting takes place should, at a minimum, be capable of ensuring the timely completion of daily settlements in the event of an inability to settle by the participant with the largest single settlement obligation.
6. Assets used for settlement should preferably be a claim on the central bank; where other assets are used, they should carry little or no credit risk and little or no liquidity risk.
7. The system should ensure a high degree of security and operational reliability and should have contingency arrangements for timely completion of daily processing.
8. The system should provide a means of making payments which is practical for its users and efficient for the economy.
9. The system should have objective and publicly disclosed criteria for participation, which permit fair and open access.
10. The system's governance arrangements should be effective, accountable and transparent.

2. Standards for Systemically Important Securities Settlement Systems

The CPSS–IOSCO Recommendations apply to the full set of institutional arrangements for confirmation, clearance, and settlement of securities transactions, including those related to market convention and pre-settlement activities. As such, not all of these standards apply to all systems. Moreover, the standards applicable to a particular system also will vary based on the structure of the market and the system's design.

While the Board endorses the CPSS–IOSCO Recommendations in their entirety, its primary interest for

[17] To facilitate analysis of settlement disruptions, systems with significant settlement flows may need to develop the capability to simulate credit and liquidity effects on participants and on the system resulting from one or more participant defaults, or other possible sources of settlement disruption. Such simulations may need to include, if appropriate, the effects of changes in market prices, volatilities, or other factors.

[18] The Board will separately inform systems subject to the policy as to whether they are or are not systemically important.

[19] The ''Interagency Paper on Sound Practices to Strengthen the Resilience of the U.S. Financial System'' defines critical financial markets as the markets for federal funds, foreign exchange, and commercial paper; U.S. government and agency securities; and corporate debt and equity securities.

[20] The Core Principles draw extensively on the previous work of the CPSS, most importantly the Report of the Committee on Interbank Netting Schemes of the Central Banks of the Group of Ten Countries (the Lamfalussy Minimum Standards). The Core Principles extend the Lamfalussy Minimum Standards by adding several principles and broadening the coverage to include systemically important payments systems of all types, including gross settlement systems and hybrid systems, operated by either the public or private sector. The Core Principles also address the responsibilities of central banks in applying the Core Principles.

purposes of this policy is in those standards related to the settlement aspects of securities transactions, including the role of central counterparties and central depositories, the delivery of securities against payment, and related risks.[21] The Board expects that systems engaged in the management or conduct of settling securities transactions and their participants to comply with the expectations set forth in the applicable Recommendations. Securities settlement systems also may wish to consult the *Assessment Methodology for ''Recommendations for Securities Settlement Systems''* for further guidance on each standard.[22]

1. Securities settlement systems should have a well-founded, clear and transparent legal basis in the relevant jurisdictions.

2. Confirmation of trades between direct market participants should occur as soon as possible after trade execution, but no later than the trade date (T+0). Where confirmation of trades by indirect market participants (such as institutional investors) is required, it should occur as soon as possible after the trade execution, preferably on T+0, but no later than T+1.

3. Rolling settlement should be adopted in all securities markets. Final settlement should occur no later than T+3. The benefits and costs of a settlement cycle shorter than T+3 should be evaluated.

4. The benefits and costs of a central counterparty should be evaluated. Where such a mechanism is introduced, the central counterparty should rigorously control the risks it assumes.

5. Securities lending and borrowing (or repurchase agreements and other economically equivalent transactions) should be encouraged as a method for expediting the settlement of securities transactions. Barriers that inhibit the practice of lending securities for this purpose should be removed.

6. Securities should be immobilized or dematerialized and transferred by book entry in a central securities depository to the greatest extent possible.

7. Central securities depositories should eliminate principal risk by linking securities transfers to funds transfers in a way that achieves delivery versus payment.

8. Final settlement should occur no later than the end of the settlement day. Intraday or real time finality should be provided where necessary to reduce risks.

9. Central securities depositories that extend intraday credit to participants, including central securities depositories that operate net settlement systems, should institute risk controls that, at a minimum, ensure timely settlement in the event that the participant with the largest payment obligation is unable to settle. The most reliable set of controls is a combination of collateral requirements and limits.

10. Assets used to settle the ultimate payment obligations arising from securities transactions should carry little or no credit or liquidity risk. If central bank money is not used, steps must be taken to protect central securities depository members from potential losses and liquidity pressures arising from the failure of the cash settlement agent whose assets are used for that purpose.

11. Sources of operational risk arising in the clearing and settlement process should be identified and minimized through the development of appropriate systems, controls and procedures. Systems should be reliable and secure, and have adequate, scalable capacity. Contingency plans and backup facilities should be established to allow for the timely recovery of operations and completion of the settlement process.

12. Entities holding securities in custody should employ accounting practices and safekeeping procedures that fully protect customers' securities. It is essential that customers' securities be protected against the claims of a custodian's creditors.

13. Governance arrangements for central securities depositories and central counterparties should be designed to fulfill public interest requirements and to promote the objectives of owners and users.

14. Central securities depositories and central counterparties should have objective and publicly disclosed criteria for participation that permit fair and open access.

15. While maintaining safe and secure operations, securities settlement systems should be cost-effective in meeting the requirements of users.

16. Securities settlement systems should use or accommodate the relevant international communication procedures and standards in order to facilitate efficient settlement of cross-border transactions.

17. Central securities depositories and central counterparties should provide market participants with sufficient information for them to identify and evaluate accurately the risks and costs associated with using the central securities depository or central counterparty services.

18. Securities settlement systems should be subject to transparent and effective regulation and oversight. Central banks and securities regulators should cooperate with each other and with other relevant authorities.

19. Central securities depositories that establish links to settle cross-border trades should design and operate such links to reduce effectively the risks associated with cross-border settlement.

II. Federal Reserve Daylight Credit Policies

This part outlines the methods used to control intraday overdraft exposures in Federal Reserve accounts. These methods include limits on daylight overdrafts in institutions' Federal Reserve accounts and collateralization, in certain situations, of daylight overdrafts at the Federal Reserve.

To assist institutions in implementing this part of the policy, the Federal Reserve has prepared two documents: the *Overview of the Federal Reserve's Payments System Risk Policy on Daylight Credit* (Overview) and the *Guide to the Federal Reserve's Payments System Risk Policy on Daylight Credit* (Guide).[23] The Overview summarizes the Board's policy on the provision of daylight credit, including net debit caps and daylight overdraft fees, and is intended for use by institutions that incur only small and infrequent daylight overdrafts. The Guide explains in detail how these policies apply to different institutions and includes procedures for completing a self-assessment and filing a cap resolution, as well as information on other aspects of the policy.

A. Daylight Overdraft Definition and Measurement

A daylight overdraft occurs when an institution's Federal Reserve account is in a negative position during the business day. The Reserve Banks use an ex post system to measure daylight overdrafts in institutions' Federal Reserve accounts. Under this ex post measurement system, certain transactions, including Fedwire funds transfers, book-entry securities transfers, and net settlement transactions, are posted as they are processed during the business day. Other transactions,

[21] The CPSS and the Technical Committee of IOSCO have recently developed a separate set of Recommendations for Central Counterparties, which are intended to supersede those elements of the Recommendations for Securities Settlement Systems that are applicable to central counterparties. The Board will review the new recommendations and determine whether it is appropriate to incorporate them into this policy.

[22] CPSS and Technical Committee of IOSCO (November 2002). Available at *http://www.bis.org.*

[23] Available at *http://www.federalreserve.gov/paymentsystems/PSR.*

including ACH and check transactions, are posted to institutions' accounts according to a defined schedule. The following table presents the schedule used by the Federal Reserve for posting transactions to institutions' accounts for purposes of measuring daylight overdrafts.

Procedures for Measuring Daylight Overdrafts [24]

Opening Balance (Previous Day's Closing Balance)

Post throughout business day:

± Fedwire funds transfers.

± Fedwire book-entry securities transfers.

± National Settlement Service entries.

Post throughout business day (beginning July 20, 2006):

+ Fedwire book-entry interest and redemption payments on securities that are not obligations of, or fully guaranteed as to principal and interest by, the United States.[25] [26] [27]

+ Electronic payments for matured coupons and definitive securities that are not obligations of, or fully guaranteed as to principal and interest by, the United States.[28]

Post at 8:30 a.m. eastern time:

± Government and commercial ACH credit transactions.[29]

+ Treasury Electronic Federal Tax Payment System (EFTPS) investments from ACH credit transactions.

+ Advance-notice Treasury investments.

+ Treasury checks, postal money orders, local Federal Reserve Bank checks, and EZ-Clear savings bond redemptions in separately sorted deposits; these items must be deposited by 12:01 a.m. local time or the local deposit deadline, whichever is later.

− Penalty assessments for tax payments from the Treasury Investment Program (TIP).[30]

Post at 8:30 a.m. eastern time and hourly, on the half-hour, thereafter:

± Main account administrative investment or withdrawal from TIP.

± Special Direct Investment (SDI) administrative investment or withdrawal from TIP.

+ 31 CFR part 202 account deposits from TIP.

− Uninvested paper tax (PATAX) deposits from TIP.

− Main account balance limit withdrawals from TIP.

− Collateral deficiency withdrawals from TIP.

− 31 CFR part 202 deficiency withdrawals from TIP.

Post at 8:30 a.m., 1 p.m., and 6:30 p.m. eastern time:

− Main account Treasury withdrawals from TIP.[31]

Post by 9:15 a.m. eastern time:

+ U.S. Treasury and government agency Fedwire book-entry interest and redemption payments.[32]

+ Electronic payments for U.S. Treasury and government agency matured coupons and definitive securities.[33]

Post by 9:15 a.m. eastern time (until July 20, 2006):

+ Fedwire book-entry interest and redemption payments on securities that are not obligations of, or fully guaranteed as to principal and interest by, the United States.[34]

+ Electronic payments for matured coupons and definitive securities that are not obligations of, or fully guaranteed as to principal and interest by, the United States.[35]

Post beginning at 9:15 a.m. eastern time:

− Original issues of Treasury securities.[36]

Post at 9:30 a.m. eastern time and hourly, on the half-hour, thereafter:

+ Federal Reserve Electronic Tax Application (FR–ETA) value Fedwire investments from TIP.

Post at 11 a.m. eastern time:

± ACH debit transactions.

+ EFTPS investments from ACH debit transactions.

Post at 11 a.m. eastern time and hourly thereafter:

±Commercial check transactions, including returned checks.[37, 38]

---

[24] This schedule of posting rules does not affect the overdraft restrictions and overdraft-measurement provisions for nonbank banks established by the Competitive Equality Banking Act of 1987 and the Board's Regulation Y (12 CFR 225.52).

[25] The Reserve Banks act as fiscal agents for certain entities, such as government-sponsored enterprises (GSEs) and international organizations, whose securities are Fedwire-eligible but are not obligations of, or fully guaranteed as to principal and interest by, the United States. The GSEs include Fannie Mae, the Federal Home Loan Mortgage Corporation (Freddie Mac), entities of the Federal Home Loan Bank System (FHLBS), the Farm Credit System, the Federal Agricultural Mortgage Corporation (Farmer Mac), the Student Loan Marketing Association (Sallie Mae), the Financing Corporation, and the Resolution Funding Corporation. The international organizations include the World Bank, the Inter-American Development Bank, the Asian Development Bank, and the African Development Bank. The Student Loan Marketing Association Reorganization Act of 1996 requires Sallie Mae to be completely privatized by 2008; however, Sallie Mae plans to complete privatization by September 2006. Upon privatization, the Reserve Banks will no longer act as fiscal agents for new issues of Sallie Mae securities, and the new Sallie Mae will not be considered a GSE.

[26] The term ''interest and redemption payments'' refers to payments of principal, interest, and redemption on securities maintained on the Fedwire Securities Service.

[27] The Reserve Banks will post these transactions, as directed by the issuer, provided that the issuer's Federal Reserve account contains funds equal to or in excess of the amount of the interest and redemption payments to be made. In the normal course, if a Reserve Bank does not receive funding from an issuer for the issuer's interest and redemption payments by the established cut-off hour of 4 p.m. eastern time on the Fedwire Securities Service, the issuer's payments will not be processed on that day.

[28] Electronic payments for credits on these securities will post according to the posting rules for the mechanism through which they are processed, as outlined in this policy. However, the majority of these payments are made by check and will be posted according to the established check posting rules as set forth in this policy.

[29] Institutions that are monitored in real time must fund the total amount of their commercial ACH credit originations in order for the transactions to be processed. If the Federal Reserve receives commercial ACH credit transactions from institutions monitored in real time after the scheduled close of the Fedwire Funds Service, these transactions will be processed at 12:30 a.m. the next business day, or by the ACH deposit deadline, whichever is earlier. The Account Balance Monitoring System provides intraday account information to the Reserve Banks and institutions and is used primarily to give authorized Reserve Bank personnel a mechanism to control and monitor account activity for selected institutions. For more information on ACH transaction processing, refer to the ACH Settlement Day Finality Guide available through the Federal Reserve Financial Services Web site at *http://www.frbservices.org.*

[30] The Reserve Banks will identify and notify institutions with Treasury-authorized penalties on Thursdays. In the event that Thursday is a holiday, the Reserve Banks will identify and notify institutions with Treasury-authorized penalties on the following business day. Penalties will then be posted on the business day following notification.

[31] On rare occasions, the Treasury may announce withdrawals in advance that are based on institutions' closing balances on the withdrawal date. The Federal Reserve will post these withdrawals after the close of Fedwire.

[32] For purposes of this policy, government agencies are those entities (other than the U.S. Treasury) for which the Reserve Banks act as fiscal agents and whose securities are obligations of, or fully guaranteed as to principal and interest by, the United States.

[33] Electronic payments for credits on these securities will post by 9:15 a.m. eastern time; however, the majority of these payments are made by check and will be posted according to the established check posting rules as set forth in this policy.

[34] *See* footnote 25.

[35] *See* footnote 33.

[36] Original issues of government agency, government-sponsored enterprise, or international organization securities are delivered as book-entry securities transfers and will be posted when the securities are delivered to the purchasing institutions.

[37] This does not include electronic check presentments, which are posted at 1 p.m. local time and hourly thereafter. Paper check presentments are posted on the hour at least one hour after presentment. Paper checks presented before 10:01 a.m. eastern time will be posted at 11 a.m. eastern time. Presentment times will be based on surveys of endpoints' scheduled courier deliveries and so

±Check corrections amounting to $1 million or more.[39]
+ Currency and coin deposits.
+ Credit adjustments amounting to $1 million or more.[40]

Post at 12:30 p.m. eastern time and hourly, on the half-hour, thereafter:

+ Dynamic investments from TIP.

Post by 1 p.m. eastern time:

+ Same-day Treasury investments.

Post at 1 p.m. local time and hourly thereafter:

− Electronic check presentments.[41]

Post at 5 p.m. eastern time:

+ Treasury checks, postal money orders, and EZ-Clear savings bond redemptions in separately sorted deposits; these items must be deposited by 4 p.m. eastern time.
+ Local Federal Reserve Bank checks; these items must be presented before 3 p.m. eastern time.
± Same-day ACH transactions; these transactions include ACH return items, check-truncation items, and flexible-settlement items.

Post at 6:30 p.m. eastern time:[42]

+ Penalty abatements from TIP.

Post after the close of Fedwire Funds Service:

± All other transactions. These transactions include the following: local Federal Reserve Bank checks presented after 3 p.m. eastern time but before 3 p.m. local time; noncash collection; currency and coin shipments; small-dollar credit adjustments; and all debit adjustments. Discount-window loans and repayments are normally posted after the close of Fedwire as well; however, in unusual circumstances a discount window loan may be posted earlier in the day with repayment 24 hours later, or a loan may be repaid before it would otherwise become due.

Equals: Closing Balance.

B. Pricing

Reserve Banks charge institutions for daylight overdrafts incurred in their Federal Reserve accounts. For each two-week reserve-maintenance period, the Reserve Banks calculate and assess daylight overdraft fees, which are equal to the sum of any daily daylight overdraft charges during the period.

Daylight overdraft fees are calculated using an annual rate of 36 basis points, quoted on the basis of a 24-hour day. To obtain the effective annual rate for the standard Fedwire operating day, the 36-basis-point annual rate is multiplied by the fraction of a 24-hour day during which Fedwire is scheduled to operate. For example, under a 21.5-hour scheduled Fedwire operating day, the effective annual rate used to calculate daylight overdraft fees equals 32.25 basis points (36 basis points multiplied by 21.5/24).[43] The effective daily rate is calculated by dividing the effective annual rate by 360.[44] An institution's daily daylight overdraft charge is equal to the effective daily rate multiplied by the institution's average daily daylight overdraft minus a deductible valued at the deductible's effective daily rate.

An institution's average daily daylight overdraft is calculated by dividing the sum of its negative Federal Reserve account balances at the end of each minute of the scheduled Fedwire operating day by the total number of minutes in the scheduled Fedwire operating day. In this calculation, each positive end-of-minute balance in an institution's Federal Reserve account is set to equal zero.

The daily daylight overdraft charge is reduced by a deductible, valued at the effective daily rate for a 10-hour operating day. The deductible equals 10 percent of a capital measure (*see* section II.C.3., ''Capital measure''). Because the effective daily rate applicable to the deductible is kept constant at the 10-hour-operating-day rate, any changes to the scheduled Fedwire operating day should not significantly affect the value of the deductible.[45] Reserve Banks will waive fees of $25 or less in any two-week reserve-maintenance period. Certain institutions are subject to a penalty fee and modified daylight overdraft fee calculation as described in section II.E.

C. Net Debit Caps

1. Definition

To limit the aggregate amount of daylight credit that the Reserve Banks extend, each institution incurring daylight overdrafts in its Federal Reserve account must adopt a net debit cap, that is, a ceiling on the uncollateralized daylight overdraft position that it can incur during a given interval. If an institution's daylight overdrafts generally do not exceed the lesser of $10 million or 20 percent of its capital measure, the institution may qualify for the exempt-from-filing cap. An institution must be financially healthy and have regular access to the discount window in order to adopt a net debit cap greater than zero or qualify for the filing exemption.

An institution's cap category and capital measure determine the size of its net debit cap. More specifically, the net debit cap is calculated as an institution's cap multiple times its capital measure:

net debit cap = cap multiple × capital measure

Cap categories (*see* section II.C.2., ''Cap categories'') and their associated cap levels, set as multiples of capital measure, are listed below:

NET DEBIT CAP MULTIPLES

Cap category	Single day	Two-week average
High	2.25	1.50
Above average.	1.875	1.125
Average	1.125	0.75
De minimis	0.40	0.40
Exempt-from-filing[46].	$10 million or 0.20.	$10 million or 0.20

will occur at the same time each day for a particular institution.

[38] Institutions must choose one of two check-credit posting options: (1) All credits posted at a single, float-weighted posting time, or (2) fractional credits posted throughout the day. The first option allows an institution to receive all of its check credits at a single time for each type of cash letter. This time may not necessarily fall on the clock hour. The second option lets the institution receive a portion of its available check credits on the clock hours between 11 a.m. and 6 p.m. eastern time. The option selected applies to all check deposits posted to an institution's account. Reserve Banks will calculate crediting fractions and float-weighted posting times for each time zone based on surveys. Credits for mixed cash letters and other Fed cash letters are posted using the crediting fractions or the float-weighted posting times for the time zone of the Reserve Bank servicing the depositing institution. For separately sorted deposits, credits are posted using the posting times for the time zone of the Reserve Bank servicing the payor institution.

[39] Corrections are account entries made to correct discrepancies detected by a Reserve Bank during the initial processing of checks.

[40] Adjustments are account entries made to correct discrepancies detected by an institution after entries have posted to its account and are made at the request of the institution.

[41] The Federal Reserve Banks will post debits to institutions' accounts for electronic check presentments made before 12 p.m. local time at 1 p.m. local time. The Reserve Banks will post presentments made after 12 p.m. local time on the next clock hour that is at least one hour after presentment takes place but no later than 3 p.m. local time.

[42] The Federal Reserve Banks will process and post Treasury-authorized penalty abatements on Thursdays. In the event that Thursday is a holiday, the Federal Reserve Banks will process and post Treasury-authorized penalty abatements on the following business day.

[43] A change in the length of the scheduled Fedwire operating day should not significantly change the amount of fees charged because the effective daily rate is applied to average daylight overdrafts, whose calculation would also reflect the change in the operating day.

[44] Under the current 21.5-hour Fedwire operating day, the effective daily daylight-overdraft rate is truncated to 0.0000089.

[45] Under the current 21.5-hour Fedwire operating day, the effective daily deductible rate is rounded to 0.0000042.

NET DEBIT CAP MULTIPLES—Continued

Cap category	Single day	Two-week average
Zero	0.0	0.0

[46] The net debit cap for the exempt-from-filing category is equal to the lesser of $10 million or 0.20 multiplied by the institution's capital measure.

An institution is expected to avoid incurring daylight overdrafts whose daily maximum level, averaged over a two-week period, would exceed its two-week average cap, and, on any day, would exceed its single-day cap.[47] The two-week average cap provides flexibility, in recognition that fluctuations in payments can occur from day to day. The purpose of the higher single-day cap is to limit excessive daylight overdrafts on any day and to ensure that institutions develop internal controls that focus on their exposures each day, as well as over time.

The Board's policy on net debit caps is based on a specific set of guidelines and some degree of examiner oversight. Under the Board's policy, a Reserve Bank may limit or prohibit an institution's use of Federal Reserve intraday credit if (1) the institution's use of daylight credit is deemed by the institution's supervisor to be unsafe or unsound; (2) the institution does not qualify for a positive net debit cap (*see* section II.C.2., ''Cap categories''); or (3) the institution poses excessive risk to a Reserve Bank by incurring chronic overdrafts in excess of what the Reserve Bank determines is prudent.

While capital measures differ, the net debit cap provisions of this policy apply to foreign banking organizations (FBOs) to the same extent that they apply to U.S. institutions. The Reserve Banks will advise home-country supervisors of the daylight overdraft capacity of U.S. branches and agencies of FBOs under their jurisdiction, as well as of other pertinent information related to the FBOs' caps. The Reserve Banks will also provide information on the daylight overdrafts in the Federal Reserve accounts of FBOs' U.S. branches and agencies in response to requests from home-country supervisors.

2. Cap Categories

The policy defines the following six cap categories, described in more detail below: high, above average, average, de minimis, exempt-from-filing, and zero. The high, above average, and average cap categories are referred to as ''self-assessed'' caps.

a. Self-assessed. In order to establish a net debit cap category of high, above average, or average, an institution must perform a self-assessment of its own creditworthiness, intraday funds management and control, customer credit policies and controls, and operating controls and contingency procedures.[48] The assessment of creditworthiness is based on the institution's supervisory rating and Prompt Corrective Action (PCA) designation.[49] An institution may perform a full assessment of its creditworthiness in certain limited circumstances, for example, if its condition has changed significantly since its last examination or if it possesses additional substantive information regarding its financial condition. An institution performing a self-assessment must also evaluate its intraday funds-management procedures and its procedures for evaluating the financial condition of and establishing intraday credit limits for its customers. Finally, the institution must evaluate its operating controls and contingency procedures to determine if they are sufficient to prevent losses due to fraud or system failures. The ''Guide to the Federal Reserve's Payments System Risk Policy'' includes a detailed explanation of the self-assessment process.

Each institution's board of directors must review that institution's self-assessment and recommended cap category. The process of self-assessment, with board-of-directors review, should be conducted at least once in each twelve-month period. A cap determination may be reviewed and approved by the board of directors of a holding company parent of an institution, provided that (1) the self-assessment is performed by each entity incurring daylight overdrafts, (2) the entity's cap is based on the measure of the entity's own capital, and (3) each entity maintains for its primary supervisor's review its own file with supporting documents for its self-assessment and a record of the parent's board-of-directors review.[50]

In applying these guidelines, each institution should maintain a file for examiner review that includes (1) worksheets and supporting analysis used in its self-assessment of its own cap category, (2) copies of senior-management reports to the board of directors of the institution or its parent (as appropriate) regarding that self-assessment, and (3) copies of the minutes of the discussion at the appropriate board-of-directors meeting concerning the institution's adoption of a cap category.[51]

As part of its normal examination, the institution's examiners may review the contents of the self-assessment file.[52] The objective of this review is to ensure that the institution has applied the guidelines appropriately and diligently, that the underlying analysis and method were reasonable, and that the resultant self-assessment was generally consistent with the examination findings. Examiner comments, if any, should be forwarded to the board of directors of the institution. The examiner, however, generally would not require a modification of the self-assessed cap

[47] The two-week period is the two-week reserve-maintenance period. The number of days used in calculating the average daylight overdraft over this period is the number of business days the institution's Reserve Bank is open during the reserve-maintenance period.

[48] This assessment should be done on an individual-institution basis, treating as separate entities each commercial bank, each Edge corporation (and its branches), each thrift institution, and so on. An exception is made in the case of U.S. branches and agencies of FBOs. Because these entities have no existence separate from the FBO, all the U.S. offices of FBOs (excluding U.S.-chartered bank subsidiaries and U.S.-chartered Edge subsidiaries) should be treated as a consolidated family relying on the FBO's capital.

[49] An insured depository institution is (1) ''well capitalized'' if it significantly exceeds the required minimum level for each relevant capital measure, (2) ''adequately capitalized'' if it meets the required minimum level for each relevant capital measure, (3) ''undercapitalized'' if it fails to meet the required minimum level for any relevant capital measure, (4) ''significantly undercapitalized'' if it is significantly below the required minimum level for any relevant capital measure, or (5) ''critically undercapitalized'' if it fails to meet any leverage limit (the ratio of tangible equity to total assets) specified by the appropriate Federal banking agency, in consultation with the FDIC, or any other relevant capital measure established by the agency to determine when an institution is critically undercapitalized (12 U.S.C. 1831o).

[50] An FBO should undergo the same self-assessment process as a domestic bank in determining a net debit cap for its U.S. branches and agencies. Many FBOs, however, do not have the same management structure as U.S. institutions, and adjustments should be made as appropriate. If an FBO's board of directors has a more limited role to play in the bank's management than a U.S. board has, the self-assessment and cap category should be reviewed by senior management at the FBO's head office that exercises authority over the FBO equivalent to the authority exercised by a board of directors over a U.S. institution. In cases in which the board of directors exercises authority equivalent to that of a U.S. board, cap determination should be made by the board of directors.

[51] In addition, for FBOs, the file that is made available for examiner review by the U.S. offices of an FBO should contain the report on the self-assessment that the management of U.S. operations made to the FBO's senior management and a record of the appropriate senior management's response or the minutes of the meeting of the FBO's board of directors or other appropriate management group, at which the self-assessment was discussed.

[52] Between examinations, examiners or Reserve Bank staff may contact an institution about its cap if there is other relevant information, such as statistical or supervisory reports, that suggests there may have been a change in the institution's financial condition.

category, but rather would inform the appropriate Reserve Bank of any concerns. The Reserve Bank would then decide whether to modify the cap category. For example, if the institution's level of daylight overdrafts constitutes an unsafe or unsound banking practice, the Reserve Bank would likely assign the institution a zero net debit cap and impose additional risk controls.

The contents of the self-assessment file will be considered confidential by the institution's examiner. Similarly, the Federal Reserve and the institution's examiner will hold the actual cap level selected by the institution confidential. Net debit cap information should not be shared with outside parties or mentioned in any public documents; however, net debit cap information will be shared with the home-country supervisor of U.S. branches and agencies of foreign banks.

The Reserve Banks will review the status of any institution with a self-assessed net debit cap that exceeds its cap during a two-week reserve-maintenance period and will decide if the cap should be maintained or if additional action should be taken (*see* section II.F., ''Monitoring'').

b. De minimis. Many institutions incur relatively small overdrafts and thus pose little risk to the Federal Reserve. To ease the burden on these small overdrafters of engaging in the self-assessment process and to ease the burden on the Federal Reserve of administering caps, the Board allows institutions that meet reasonable safety and soundness standards to incur de minimis amounts of daylight overdrafts without performing a self-assessment. An institution may incur daylight overdrafts of up to 40 percent of its capital measure if the institution submits a board-of-directors resolution.

An institution with a de minimis cap must submit to its Reserve Bank at least once in each 12-month period a copy of its board-of-directors resolution (or a resolution by its holding company's board) approving the institution's use of daylight credit up to the de minimis level. The Reserve Banks will review the status of a de minimis cap institution that exceeds its cap during a two-week reserve-maintenance period and will decide if the de minimis cap should be maintained or if the institution will be required to perform a self-assessment for a higher cap.

c. Exempt-from-filing. Institutions that only rarely incur daylight overdrafts in their Federal Reserve accounts that exceed the lesser of $10 million or 20 percent of their capital measure are excused from performing self-assessments and filing board-of-directors resolutions with their Reserve Banks. This dual test of dollar amount and percent of capital measure is designed to limit the filing exemption to institutions that create only low-dollar risks to the Reserve Banks and that incur small overdrafts relative to their capital measure.

The Reserve Banks will review the status of an exempt institution that incurs overdrafts in its Federal Reserve account in excess of $10 million or 20 percent of its capital measure on more than two days in any two consecutive two-week reserve-maintenance periods. The Reserve Bank will decide if the exemption should be maintained or if the institution will be required to file for a cap. Granting of the exempt-from-filing net debit cap is at the discretion of the Reserve Bank.

d. Zero. Some financially healthy institutions that could obtain positive net debit caps choose to have zero caps. Often these institutions have very conservative internal policies regarding the use of Federal Reserve daylight credit or simply do not want to incur daylight overdrafts and any associated daylight overdraft fees. If an institution that has adopted a zero cap incurs a daylight overdraft, the Reserve Bank counsels the institution and may monitor the institution's activity in real time and reject or delay certain transactions that would cause an overdraft. If the institution qualifies for a positive cap, the Reserve Bank may suggest that the institution adopt an exempt-from-filing cap or file for a higher cap if the institution believes that it will continue to incur daylight overdrafts.

In addition, a Reserve Bank may assign an institution a zero net debit cap. Institutions that may pose special risks to the Reserve Banks, such as those without regular access to the discount window, those incurring daylight overdrafts in violation of this policy, or those in weak financial condition, are generally assigned a zero cap (*see* section II.E.5., ''Problem institutions''). Recently-chartered institutions may also be assigned a zero net debit cap.

3. Capital Measure

As described above, an institution's cap category and capital measure determine the size of its net debit cap. The capital measure used in calculating an institution's net debit cap depends upon its chartering authority and home-country supervisor.

a. U.S.-chartered institutions. For institutions chartered in the United States, net debit caps are multiples of ''qualifying'' or similar capital measures that consist of those capital instruments that can be used to satisfy risk-based capital standards, as set forth in the capital adequacy guidelines of the Federal financial regulatory agencies. All of the Federal financial regulatory agencies collect, as part of their required reports, data on the amount of capital that can be used for risk-based purposes—''risk-based'' capital for commercial banks, savings banks, and savings associations and total regulatory reserves for credit unions. Other U.S.-chartered entities that incur daylight overdrafts in their Federal Reserve accounts should provide similar data to their Reserve Banks.

b. U.S. branches and agencies of foreign banks. For U.S. branches and agencies of foreign banks, net debit caps on daylight overdrafts in Federal Reserve accounts are calculated by applying the cap multiples for each cap category to the FBO's U.S. capital equivalency measure.[53] U.S. capital equivalency is equal to the following:

- 35 percent of capital for FBOs that are financial holding companies (FHCs).[54]
- 25 percent of capital for FBOs that are not FHCs and have a strength of support assessment ranking (SOSA) of 1.[55]
- 10 percent of capital for FBOs that are not FHCs and are ranked a SOSA 2.
- 5 percent of ''net due to related depository institutions'' for FBOs that are not FHCs and are ranked a SOSA 3.

Granting a net debit cap, or any extension of intraday credit, to an

[53] The term ''U.S. capital equivalency'' is used in this context to refer to the particular capital measure used to calculate net debit caps and does not necessarily represent an appropriate capital measure for supervisory or other purposes.

[54] The Gramm-Leach-Bliley Act defines a financial holding company as a bank holding company that meets certain eligibility requirements. In order for a bank holding company to become a financial holding company and be eligible to engage in the new activities authorized under the Gramm-Leach-Bliley Act, the Act requires that all depository institutions controlled by the bank holding company be well capitalized and well managed (12 U.S.C. 1841(p)). With regard to a foreign bank that operates a branch or agency or owns or controls a commercial lending company in the United States, the Act requires the Board to apply comparable capital and management standards that give due regard to the principle of national treatment and equality of competitive opportunity (12 U.S.C. 1843(l)).

[55] The SOSA ranking is composed of four factors, including the FBO's financial condition and prospects, the system of supervision in the FBO's home country, the record of the home country's government in support of the banking system or other sources of support for the FBO; and transfer risk concerns. Transfer risk relates to the FBO's ability to access and transmit U.S. dollars, which is an essential factor in determining whether an FBO can support its U.S. operations. The SOSA ranking is based on a scale of 1 through 3, with 1 representing the lowest level of supervisory concern.

institution is at the discretion of the Reserve Bank. In the event a Reserve Bank grants a net debit cap or extends intraday credit to a financially healthy SOSA 3-ranked FBO, the Reserve Bank may require such credit to be fully collateralized, given the heightened supervisory concerns with SOSA 3-ranked FBOs.

D. Collateralized Capacity

The Board recognizes that while net debit caps provide sufficient liquidity to most institutions, some institutions may still experience liquidity pressures. The Board believes it is important to provide an environment in which payment systems may function effectively and efficiently and to remove barriers, as appropriate, to foster risk-reducing payment system initiatives. Consequently, certain institutions with self-assessed net debit caps may pledge collateral to their administrative Reserve Banks to secure daylight overdraft capacity in excess of their net debit caps, subject to Reserve Bank approval.[56,57] This policy is intended to provide extra liquidity through the pledge of collateral to the few institutions that might otherwise be constrained from participating in risk-reducing payment system initiatives.[58] The Board believes that requiring collateral allows the Federal Reserve to protect the public sector from additional credit risk. Additionally, providing extra liquidity to these few institutions should help prevent liquidity-related market disruptions.

An institution with a self-assessed net debit cap that wishes to expand its daylight overdraft capacity by pledging collateral should consult with its administrative Reserve Bank. Institutions that request daylight overdraft capacity beyond the net debit cap must have already explored other alternatives to address their increased liquidity needs.[59] The Reserve Banks will work with an institution that requests additional daylight overdraft capacity to determine the appropriate maximum daylight overdraft capacity level. In considering the institution's request, the Reserve Bank will evaluate the institution's rationale for requesting additional daylight overdraft capacity as well as its financial and supervisory information. The financial and supervisory information considered may include, but is not limited to, capital and liquidity ratios, the composition of balance sheet assets, CAMELS or other supervisory ratings and assessments, and SOSA rankings (for U.S. branches and agencies of foreign banks). An institution approved for a maximum daylight overdraft capacity level must submit at least once in each twelve-month period a board-of-directors resolution indicating its board's approval of that level.

If the Reserve Bank approves an institution's request, the Reserve Bank approves a maximum daylight overdraft capacity level. The maximum daylight overdraft capacity is defined as follows:

maximum daylight overdraft capacity = single-day net debit cap + collateralized capacity.[60]

An institution that has a self-assessed net debit cap and that has also been approved for a maximum daylight overdraft capacity level has a two-week average limit equal to its two-week average net debit cap plus its collateralized capacity, averaged over a two-week reserve-maintenance period. The single-day limit is equal to an institution's single-day net debit cap plus its collateralized capacity. The institution should avoid incurring daylight overdrafts whose daily maximum level, averaged over a two-week period, would exceed its two-week average limit, and, on any day, would exceed its single-day limit. The Reserve Banks will review the status of any institution that exceeds its single-day or two-week limit during a two-week reserve-maintenance period and will decide if the maximum daylight overdraft capacity should be maintained or if additional action should be taken (*see* section II.F., ''Monitoring'').

Institutions with exempt-from-filing and *de minimis* net debit caps may *not* obtain additional daylight overdraft capacity by pledging collateral without first obtaining a self-assessed net debit cap. Likewise, institutions that have voluntarily adopted zero net debit caps may *not* obtain additional daylight overdraft capacity by pledging collateral without first obtaining a self-assessed net debit cap. Institutions that have been assigned a zero net debit cap by their administrative Reserve Bank are *not* eligible to apply for any daylight overdraft capacity.

E. Special Situations

Under the Board's policy, certain institutions warrant special treatment primarily because of their charter types. As mentioned previously, an institution must have regular access to the discount window and be in sound financial condition in order to adopt a net debit cap greater than zero. Institutions that do not have regular access to the discount window include Edge and agreement corporations, bankers' banks that are not subject to reserve requirements, limited-purpose trust companies, government-sponsored enterprises (GSEs), and certain international organizations.[61] Institutions that have been assigned a zero cap by their Reserve Banks are also subject to special considerations under this policy based on the risks they pose. In developing its policy for these institutions, the Board has sought to balance the goal of reducing and managing risk in the payments system, including risk to the Federal Reserve, with that of minimizing the adverse effects on the payments operations of these institutions.

Regular access to the Federal Reserve discount window generally is available to institutions that are subject to reserve requirements. If an institution that is not subject to reserve requirements and thus does not have regular discount-window access were to incur a daylight overdraft, the Federal Reserve might end up extending overnight credit to that institution if the daylight overdraft were not covered by the end of the business day. Such a credit extension would be contrary to the quid pro quo of reserves for regular discount-window access as reflected in the Federal Reserve Act and in Board regulations. Thus, institutions that do not have regular access to the discount window should not incur daylight overdrafts in their Federal Reserve accounts.

Certain institutions are subject to a daylight-overdraft penalty fee levied

[56] The administrative Reserve Bank is responsible for the administration of Federal Reserve credit, reserves, and risk management policies for a given institution or other legal entity.

[57] Institutions have some flexibility as to the specific types of collateral they may pledge to the Reserve Banks; however, all collateral must be acceptable to the Reserve Banks. The Reserve Banks may accept securities in transit on the Fedwire book-entry securities system as collateral to support the maximum daylight overdraft capacity level. Securities in transit refer to book-entry securities transferred over the Fedwire Securities Service that have been purchased by an institution but not yet paid for and owned by the institution's customers.

[58] Institutions may consider applying for a maximum daylight overdraft capacity level for daylight overdrafts resulting from Fedwire funds transfers, Fedwire book-entry securities transfers, National Settlement Service entries, and ACH credit originations. Institutions incurring daylight overdrafts as a result of other payment activity may be eligible for administrative counseling flexibility (59 FR 54915–18, Nov. 2, 1994).

[59] Some potential alternatives available to an institution to address increased intraday credit needs include shifting funding patterns, delaying the origination of funds transfers, or transferring some payments processing business to a correspondent bank.

[60] Collateralized capacity, on any given day, equals the amount of collateral pledged to the Reserve Bank, not to exceed the difference between the institution's maximum daylight overdraft capacity level and its single-day net debit cap.

[61] *See* footnote 25.

against the average daily daylight overdraft incurred by the institution. These include Edge and agreement corporations, bankers' banks that are not subject to reserve requirements, and limited-purpose trust companies. The annual rate used to determine the daylight-overdraft penalty fee is equal to the annual rate applicable to the daylight overdrafts of other institutions (36 basis points) plus 100 basis points multiplied by the fraction of a 24-hour day during which Fedwire is scheduled to operate (currently 21.5/24). The daily daylight-overdraft penalty rate is calculated by dividing the annual penalty rate by 360.[62] The daylight-overdraft penalty rate applies to the institution's average daily daylight overdraft in its Federal Reserve account. The daylight-overdraft penalty rate is charged in lieu of, not in addition to, the rate used to calculate daylight overdraft fees for institutions described in section II.B. Institutions that are subject to the daylight-overdraft penalty fee do not benefit from a deductible and are subject to a minimum fee of $25 on any daylight overdrafts incurred in their Federal Reserve accounts.[63]

1. Edge and Agreement Corporations [64]

Edge and agreement corporations should refrain from incurring daylight overdrafts in their Federal Reserve accounts. In the event that any daylight overdrafts occur, the Edge or agreement corporation must post collateral to cover the overdrafts. In addition to posting collateral, the Edge or agreement corporation would be subject to the daylight-overdraft penalty rate levied against the average daily daylight overdrafts incurred by the institution, as described above.

This policy reflects the Board's concerns that these institutions lack regular access to the discount window and that the parent company may be unable or unwilling to cover its subsidiary's overdraft on a timely basis. The Board notes that the parent of an Edge or agreement corporation could fund its subsidiary during the day over Fedwire or the parent could substitute itself for its subsidiary on private systems. Such an approach by the parent could both reduce systemic risk exposure and permit the Edge or agreement corporation to continue to service its customers. Edge and agreement corporation subsidiaries of foreign banking organizations are treated in the same manner as their domestically owned counterparts.

2. Bankers' Banks [65]

Bankers' banks are exempt from reserve requirements and do not have regular access to the discount window. They do, however, have access to Federal Reserve payment services. Bankers' banks should refrain from incurring daylight overdrafts and must post collateral to cover any overdrafts they do incur. In addition to posting collateral, a bankers' bank would be subject to the daylight-overdraft penalty fee levied against the average daily daylight overdrafts incurred by the institution, as described above.

The Board's policy for bankers' banks reflects the Reserve Banks' need to protect themselves from potential losses resulting from daylight overdrafts incurred by bankers' banks. The policy also considers the fact that some bankers' banks do not incur the costs of maintaining reserves as do some other institutions and do not have regular access to the discount window.

Bankers' banks may voluntarily waive their exemption from reserve requirements, thus gaining access to the discount window. Such bankers' banks are free to establish net debit caps and would be subject to the same policy as other institutions. The policy set out in this section applies only to those bankers' banks that have not waived their exemption from reserve requirements.

3. Limited-Purpose Trust Companies [66]

The Federal Reserve Act permits the Board to grant Federal Reserve membership to limited-purpose trust companies subject to conditions the Board may prescribe pursuant to the Act. As a general matter, member limited-purpose trust companies do not accept reservable deposits and do not have regular discount-window access. Limited-purpose trust companies should refrain from incurring daylight overdrafts and must post collateral to cover any overdrafts they do incur. In addition to posting collateral, limited-purpose trust companies would be subject to the same daylight-overdraft penalty rate as other institutions that do not have regular access to the discount window.

4. Government-Sponsored Enterprises and International Organizations (Beginning July 20, 2006)

The Reserve Banks act as fiscal agents for certain GSEs and international organizations in accordance with federal statutes. These institutions generally have Federal Reserve accounts and issue securities over the Fedwire Securities Service. The securities of these institutions are not obligations of, or fully guaranteed as to principal and interest by, the United States. Furthermore, these institutions are not subject to reserve requirements and do not have regular access to the discount window. GSEs and international organizations should refrain from incurring daylight overdrafts and must post collateral to cover any daylight overdrafts they do incur. In addition to posting collateral, these institutions would be subject to the same daylight-overdraft penalty rate as other institutions that do not have regular access to the discount window.

5. Problem Institutions

For institutions that are in weak financial condition, the Reserve Banks will impose a zero cap. The Reserve Bank will also monitor the institution's activity in real time and reject or delay certain transactions that would create an overdraft. Problem institutions should refrain from incurring daylight overdrafts and must post collateral to cover any daylight overdrafts they do incur.

F. Monitoring

1. Ex Post

Under the Federal Reserve's ex post monitoring procedures, an institution with a daylight overdraft in excess of its maximum daylight overdraft capacity or net debit cap may be contacted by its Reserve Bank. The Reserve Bank may counsel the institution, discussing ways to reduce its excessive use of intraday credit. Each Reserve Bank retains the right to protect its risk exposure from

[62] Under the current 21.5-hour Fedwire operating day, the effective daily daylight-overdraft penalty rate is truncated to 0.0000338.

[63] While daylight overdraft fees are calculated differently for these institutions than for institutions that have regular access to the discount window, overnight overdrafts at Edge and agreement corporations, bankers' banks that are not subject to reserve requirements, limited-purpose trust companies, GSEs, and international organizations are priced the same as overnight overdrafts at institutions that have regular access to the discount window.

[64] These institutions are organized under section 25A of the Federal Reserve Act (12 U.S.C. 611–631) or have an agreement or undertaking with the Board under section 25 of the Federal Reserve Act (12 U.S.C. 601–604(a)).

[65] For the purposes of this policy, a bankers' bank is a depository institution that is not required to maintain reserves under the Board's Regulation D (12 CFR part 204) because it is organized solely to do business with other financial institutions, is owned primarily by the financial institutions with which it does business, and does not do business with the general public. Such bankers' banks also generally are not eligible for Federal Reserve Bank credit under the Board's Regulation A (12 CFR 201.2(c)(2)).

[66] For the purposes of this policy, a limited-purpose trust company is a trust company that is a member of the Federal Reserve System but that does not meet the definition of ''depository institution'' in section 19(b)(1)(A) of the Federal Reserve Act (12 U.S.C. 461(b)(1)(A)).

individual institutions by unilaterally reducing net debit caps, imposing collateralization or clearing-balance requirements, rejecting or delaying certain transactions as described below, or, in extreme cases, taking the institution off line or prohibiting it from using Fedwire.

2. Real Time

A Reserve Bank will, through the Account Balance Monitoring System, apply real-time monitoring to an individual institution's position when the Reserve Bank believes that it faces excessive risk exposure, for example, from problem banks or institutions with chronic overdrafts in excess of what the Reserve Bank determines is prudent. In such a case, the Reserve Bank will control its risk exposure by monitoring the institution's position in real-time, rejecting or delaying certain transactions that would exceed the institution's maximum daylight overdraft capacity or net debit cap, and taking other prudential actions, including requiring collateral.[67]

3. Multi-District Institutions

Institutions, such as those maintaining merger-transition accounts and U.S. branches and agencies of a foreign bank, that access Fedwire through accounts in more than one Federal Reserve District are expected to manage their accounts so that the total daylight overdraft position across all accounts does not exceed their net debit caps. One Reserve Bank will act as the administrative Reserve Bank and will have overall risk-management responsibilities for institutions maintaining accounts in more than one Federal Reserve District. For domestic institutions that have branches in multiple Federal Reserve Districts, the administrative Reserve Bank generally will be the Reserve Bank where the head office of the bank is located.

In the case of families of U.S. branches and agencies of the same foreign banking organization, the administrative Reserve Bank generally is the Reserve Bank that exercises the Federal Reserve's oversight responsibilities under the International Banking Act.[68] The administrative Reserve Bank, in consultation with the management of the foreign bank's U.S. operations and with Reserve Banks in whose territory other U.S. agencies or branches of the same foreign bank are located, may determine that these agencies and branches will not be permitted to incur overdrafts in Federal Reserve accounts. Alternatively, the administrative Reserve Bank, after similar consultation, may allocate all or part of the foreign family's net debit cap to the Federal Reserve accounts of agencies or branches that are located outside of the administrative Reserve Bank's District; in this case, the Reserve Bank in whose Districts those agencies or branches are located will be responsible for administering all or part of the collateral requirement.[69]

G. Transfer-Size Limit on Book-Entry Securities

Secondary-market book-entry securities transfers on Fedwire are limited to a transfer size of $50 million par value. This limit is intended to encourage partial deliveries of large trades in order to reduce position building by dealers, a major cause of book-entry securities overdrafts before the introduction of the transfer-size limit and daylight overdraft fees. This limitation does not apply to either of the following:

a. Original issue deliveries of book-entry securities from a Reserve Bank to an institution

b. Transactions sent to or by a Reserve Bank in its capacity as fiscal agent of the United States, government agencies, or international organizations.

Thus, requests to strip or reconstitute Treasury securities or to convert bearer or registered securities to or from book-entry form are exempt from this limitation. Also exempt are pledges of securities to a Reserve Bank as principal (for example, discount-window collateral) or as agent (for example, Treasury Tax and Loan collateral).

By order of the Board of Governors of the Federal Reserve System, November 24, 2004.

Jennifer J. Johnson,

Secretary of the Board.

[FR Doc. 04–26444 Filed 11–30–04; 8:45 am]

BILLING CODE 6210–01–P

[67] Institutions that are monitored in real time must fund the total amount of their ACH credit originations in order for the transactions to be processed by the Federal Reserve, even if those transactions are processed one or two days before settlement.

[68] 12 U.S.C. 3101–3108.

[69] As in the case of Edge and agreement corporations and their branches, with the approval of the designated administrative Reserve Bank, a second Reserve Bank may assume the responsibility of managing and monitoring the net debit cap of particular foreign branch and agency families. This would often be the case when the payments activity and national administrative office of the foreign branch and agency family is located in one District, while the oversight responsibility under the International Banking Act is in another District. If a second Reserve Bank assumes management responsibility, monitoring data will be forwarded to the designated administrator for use in the supervisory process.

GENERAL SERVICES ADMINISTRATION

OMB Control No. 3090–0086

General Services Administration Acquisition Regulation; Information Collection; Proposal to Lease Space (Not Required By Regulation), GSA Form 1364

AGENCY: General Services Administration (GSA), GSA.

ACTION: Notice of request for comments regarding a renewal to an existing OMB clearance.

SUMMARY: Under the provisions of the Paperwork Reduction Act of 1995 (44 U.S.C. Chapter 35), the General Services Administration will be submitting to the Office of Management and Budget (OMB) a request to review and approve a renewal of a currently approved information collection requirement regarding proposal to lease space (not required by regulation), GSA Form 1364.

Public comments are particularly invited on: Whether this collection of information is necessary and whether it will have practical utility; whether our estimate of the public burden of this collection of information is accurate, and based on valid assumptions and methodology; ways to enhance the quality, utility, and clarity of the information to be collected.

DATES: Submit comments on or before: January 31, 2005.

FOR FURTHER INFORMATION CONTACT: Julia Wise, Procurement Analyst, Contract Policy Division, at telephone (202) 208–1168 or via e-mail to *julia.wise@gsa.gov*.

ADDRESSES: Submit comments regarding this burden estimate or any other aspect of this collection of information, including suggestions for reducing this burden to the Regulatory Secretariat (VIR), General Services Administration, Room 4035, 1800 F Street, NW., Washington, DC 20405. Please cite OMB Control No. 3090–0086, Proposal to Lease Space (Not Required By Regulation), GSA Form 1364, in all correspondence.

SUPPLEMENTARY INFORMATION:

A. Purpose

The General Services Administration (GSA) has various mission responsibilities related to the acquisition and provision of real property management, and disposal of real and personal property. These mission responsibilities generate requirements that are realized through the solicitation and award of leasing contracts. Individual solicitations and

resulting contracts may impose unique information collection/reporting requirements on contractors, not required by regulation, but necessary to evaluate particular program accomplishments and measure success in meeting program objectives.

B. Annual Reporting Burden

Respondents: 5016
Responses Per Respondent: 1
Hours Per Response: 5.0205
Total Burden Hours: 25,183
Obtaining Copies of Proposals: Requesters may obtain a copy of the information collection documents from the General Services Administration, Regulatory Secretariat (V), 1800 F Street, NW., Room 4035, Washington, DC 20405, telephone (202) 208–7312. Please cite OMB Control No. 3090–0086, Proposal to Lease Space (Not Required By Regulation), GSA Form 1364, in all correspondence.

Dated: November 22, 2004.

Laura Auletta,

Director, Contract Policy Division.

[FR Doc. 04–26455 Filed 11–30–04; 8:45 am]

BILLING CODE 6820–61–S

DEPARTMENT OF HEALTH AND HUMAN SERVICES

Administration on Aging

2005 White House Conference on Aging Listening Sessions

AGENCY: Administration on Aging, HHS.

ACTION: Notice.

SUMMARY: Pursuant to section 10(a) of the Federal Advisory Committee Act as amended (5 U.S.C. Appendix 2), notice is hereby given of listening sessions on December 7 in Indianapolis, Indiana and December 8 in Chicago, Illinois. The listening sessions will be open to the public, with attendance limited to space available. Individuals who plan to attend and need special assistance, such as sign language interpretation or other reasonable accommodations, should inform the contact person listed below in advance of the meeting.

Dates, Times, and Addresses: Tuesday, December 7, 2004, from 4:15 to 5:15 p.m. at the Westin Hotel, 50 South Capitol Avenue, Indianapolis, Indiana 46204 in conjunction with the 49th Annual Governor's Conference on Aging; Wednesday, December 8, 2004, from 9 a.m. to 11:30 a.m. at the Hyatt Regency Hotel, 151 East Wacker Drive, Regency D, Chicago, Illinois 60601 in conjunction with the 2004 Illinois Governor's Conference on Aging. Because of verifying logistical issues, the listening sessions fall under the 15-day notification requirement.

FOR FURTHER INFORMATION CONTACT: For general questions concerning the two listening sessions: Nora Andrews at (301) 443–2874. For specific listening sessions: December 7 in Indianapolis, IN, Ernestine Kasper, (317) 232–7125, or e-mail *Ernestine.kasper@fssa.in.gov;* December 8 in Chicago, IL, Matt Wescott, (217) 785–3357, e-mail *matt.wescott@aging.state.il.us.*

SUPPLEMENTARY INFORMATION: As the Baby Boom generation approaches retirement age, it is essential that we evaluate and develop any needed policies to ensure that this national resource remains a vital part of society. The 2005 White House Conference on Aging (WHCoA) is seeking input from a wide array of stakeholders as we develop an overarching agenda and plan for the 2005 WHCoA. For example, how can we enable both ''rising'' seniors and mature seniors to continue actively participating in and contributing to personal, community and national well-being? Looking forward over the next decade and beyond, how can we, as individuals, businesses, private organizations, and Government, in partnership, better harness the vast potential that exists within an aging America.

Josefina G. Carbonell,

Assistant Secretary for Aging.

[FR Doc. 04–26438 Filed 11–30–04; 8:45 am]

BILLING CODE 4154–01–P

DEPARTMENT OF HEALTH AND HUMAN SERVICES

Centers for Disease Control and Prevention

[60Day–05–0527]

Proposed Data Collections Submitted for Public Comment and Recommendations

In compliance with the requirement of section 3506(c)(2)(A) of the Paperwork Reduction Act of 1995 for opportunity for public comment on proposed data collection projects, the Centers for Disease Control and Prevention (CDC) will publish periodic summaries of proposed projects. To request more information on the proposed projects or to obtain a copy of the data collection plans and instruments, call 404–498–1210 or send comments to Seleda Perryman, CDC Assistant Reports Clearance Officer, 1600 Clifton Road, MS–E11, Atlanta, GA 30333 or send an e-mail to *omb@cdc.gov.*

Comments are invited on: (a) Whether the proposed collection of information is necessary for the proper performance of the functions of the agency, including whether the information shall have practical utility; (b) the accuracy of the agency's estimate of the burden of the proposed collection of information; (c) ways to enhance the quality, utility, and clarity of the information to be collected; and (d) ways to minimize the burden of the collection of information on respondents, including through the use of automated collection techniques or other forms of information technology. Written comments should be received within 60 days of this notice.

Proposed Project

Human Exposure to Cyanobacterial (blue-green algal) Toxins in Drinking Water: Risk of Exposure to Microcystin from Public Water Systems (OMB No. 0920–0527) ''Revision—National Center for Environmental Health (NCEH), Centers for Disease Control and Prevention (CDC).

Cyanobacteria (blue-green algae) can be found in terrestrial, fresh, brackish, or marine water environments. Some species of cyanobacteria produce toxins that may cause acute or chronic illnesses (including neurotoxicity, hepatotoxicity, and skin irritation) in humans and animals (including other mammals, fish, and birds). A number of human health effects, including gastroenteritis, respiratory effects, skin irritations, allergic responses, and liver damage, are associated with the ingestion of or contact with water containing cyanobacterial blooms. Although the balance of evidence, in conjunction with data from laboratory animal research, suggests that cyanobacterial toxins are responsible for a range of human health effects, there have been few epidemiologic studies of this association.

CDC originally planned to conduct a study of human exposure to microcystins in drinking water from a source with a cyanobacterial bloom. However, regional weather patterns over the last 2 years (since the original OMB application was approved) have not supported blooms in the lake that is the source of drinking water for our cooperating utility. Therefore, we have decided to redirect our activities to assess recreational exposures. Anecdotal evidence suggests that exposure to cyanobacterial toxins in recreational waters may be an important public health issue.

CDC, National Center for Environmental Health plans to recruit 2,000 people (2,500 contacts, 80%

agreeing to participate) as they arrive to participate in recreational activities on fresh water bodies with cyanobacteria blooms. Questionnaires will be administered to all study participants while they are on the beach and again when they leave the beach for the day. CDC plans to contact them by phone 7 days after their beach exposure to administer a final questionnaire. Water samples for levels of cyanobacterial toxins and water quality indicators, including microorganisms will also be examined. Blood samples will be collected from a subset of study participants who are exposed to recreational waters with blooms of *Microcystis aeruginosa*. Blood samples will be analyzed using a newly developed molecular assay for levels of microcystin L–R–one of the hepatotoxins produced by this organism. CDC will evaluate the probability of detecting (1) increases in symptoms after people engage in recreational activities in water bodies during cyanobacteria blooms, and (2) low levels of microcystins (<10 ng/ml of blood) in the blood of people who are exposed to very low levels of this toxin while engaged in recreational activities. There are no costs to respondents except their time to participate in the survey.

Respondents	No. of respondents	No. of responses per respondent	Average burden per response (in hours)	Total burden (in hours)
Recruiting contact	2500	1	10/60	417
Pre-activity survey	2000	1	10/60	334
Post-activity survey	2000	1	10/60	334
Telephone follow-up survey	2000	1	10/60	334
Total				1,419

Dated: November 24, 2004.

B. Kathy Skipper,

Acting Director, Management Analysis and Services Office, Centers for Disease Control and Prevention.

[FR Doc. 04–26486 Filed 11–30–04; 8:45 am]

BILLING CODE 4163–18–P

DEPARTMENT OF HEALTH AND HUMAN SERVICES

Centers for Disease Control and Prevention

[30Day–0450X]

Proposed Data Collections Submitted for Public Comment and Recommendations

The Centers for Disease Control and Prevention (CDC) publishes a list of information collection requests under review by the Office of Management and Budget (OMB) in compliance with the Paperwork Reduction Act (44 U.S.C. Chapter 35). To request a copy of these requests, call the CDC Reports Clearance Officer at (404) 498–1210 or send an e-mail to *omb@cdc.gov*. Send written comments to CDC Desk Officer, Human Resources and Housing Branch, New Executive Office Building, Room 10235, Washington, DC 20503 or by fax to (202) 395–6974. Written comments should be received within 30 days of this notice.

Proposed Project

Evaluation of the Poison Help Campaign to Enhance Public Awareness of the National Poison Toll-Free Number, Poison Center Access, and Poison Prevention—New—National Center for Injury Control and Prevention (NCIPC), Centers for Disease Control and Prevention (CDC).

Background and brief description:

Every day more than 6,000 calls about poison emergencies are placed to poison control centers (PCCs) throughout the United States. Although PCCs clearly save lives and reduce healthcare costs, the system that delivers care and prevents poisoning is comprised of more than 131 telephone numbers and thousands of disjointed local prevention efforts. As a result public and professional access to an essential emergency service has been hampered by a confusing array of telephone numbers and by an inability to mount a full-fledged national poison center awareness campaign.

The Poison Control Center Enhancement and Awareness Act of 2000 (Pub. L. 106–174) was signed into legislation in February 2000 with the intent to provide assistance for poison prevention and to stabilize funding of regional PCCs. In October 1999, in response to the impending passage of this legislation, CDC and the Health Services Resource Administration (HRSA) began funding and administering a cooperative agreement with the American Association of Poison Control Centers (AAPCC). The agreement called for the establishment of a National Poison Prevention and Control Program. The purpose of this program is to support an integrated system of poison prevention and control services including: coordination of all PCCs through development, implementation, and evaluation of standardized public education; development of a plan to improve national toxicosurveillance and data systems; and support of a national public service media campaign.

The purpose of the national media campaign is to launch a national toll-free helpline entitled Poison Help (1–800–222–1222) that the general public, health professionals, and others can use to access poison emergency services and prevention information 24 hours a day, seven days a week. The campaign was launched nationally in January 2002 with a special interest in targeting high-risk populations such as parents of children under age 6, older adults between 60–80 years of age, and underserved groups who are often not reached effectively through public health communication efforts.

Two telephone surveys will be conducted to assess the reach and impact of campaign activities and the overall effectiveness of the awareness campaign. The High-Risk Population Survey will be conducted with parents of children under age 6 to assess their awareness of the national toll-free number, awareness of PCCs and the services they provide, and poison prevention knowledge. The High-Risk Population Survey was originally intended to also gather information from older adults ages 60–80, however, limited resources necessitate that the data collection focus on poisonings among young children, which represent more than half of all unintentional poisonings. The Helpline Caller Survey will be conducted with persons who have contacted a PCC to ascertain whether callers have seen or heard Poison Help prevention messages, their awareness of the 1–800–222–1222 number and how they learned of it, and how they rate the ease of accessing poison emergency services or

prevention information. There is no cost to respondents other than their time. The estimated annualized burden is 157 hours.

Annualized Burden Table:

Respondents	Number of respondents	Number of responses/respondents	Average burden/respondents (in hours)
Screened Households:			
Helpline Callers	430	1	.5/60
High-Risk Population	1400	1	1/60
Respondents:			
Helpline Callers	300	1	10/60
High-Risk Population	600	1	8/60

Dated: November 24, 2004.

B. Kathy Skipper,

Acting Director, Management Analysis and Services Office, Centers for Disease Control and Prevention.

[FR Doc. 04–26487 Filed 11–30–04; 8:45 am]

BILLING CODE 4163–18–P

DEPARTMENT OF HEALTH AND HUMAN SERVICES

Centers for Disease Control and Prevention

[60Day–05AK]

Proposed Data Collections Submitted for Public Comment and Recommendations

In compliance with the requirement of section 3506(c)(2)(A) of the Paperwork Reduction Act of 1995 for opportunity for public comment on proposed data collection projects, the Centers for Disease Control and Prevention (CDC) will publish periodic summaries of proposed projects. To request more information on the proposed projects or to obtain a copy of the data collection plans and instruments, call 404–498–1210 or send comments to Seleda Perryman, CDC Assistant Reports Clearance Officer, 1600 Clifton Road, MS–E11, Atlanta, GA 30333 or send an e-mail to *omb@cdc.gov*.

Comments are invited on: (a) Whether the proposed collection of information is necessary for the proper performance of the functions of the agency, including whether the information shall have practical utility; (b) the accuracy of the agency's estimate of the burden of the proposed collection of information; (c) ways to enhance the quality, utility, and clarity of the information to be collected; and (d) ways to minimize the burden of the collection of information on respondents, including through the use of automated collection techniques or other forms of information technology. Written comments should be received within 60 days of this notice.

Proposed Project

National Intimate Partner Violence Survey—New—National Center for Injury Prevention and Control (NCIPC), Centers for Disease Control and Prevention (CDC).

Intimate partner violence (IPV) is considered by many to be a serious problem. CDC considers IPV to be a ''substantial public health problem for Americans that has serious consequences and cost to individuals, families, communities and society.'' The past twenty years have witnessed an extraordinary growth in research on the prevalence, incidence, causes and effects of IPV. Various disciplines have contributed to the development of research on the subject including psychology, epidemiology, criminology and public health.

Still, there is a lack of reliable information on the prevalence of IPV and on trends over time. Estimates vary widely regarding the magnitude of the problem. This variance is due in large part to the different methods that are used to measure IPV and the context in which questions are asked about IPV. Thus, CDC is engaged in work to improve the quality of data, and hence knowledge about IPV. Part of this process includes comparing various ways of introducing questions about IPV and comparing information obtained from both men and women when questions about IPV victimization and perpetration are asked in differing order.

The purpose of this project is to administer questions, via telephone interviews, that measure both victimization and perpetration for various forms of intimate partner violence (IPV) including stalking, sexual violence, physical violence, and emotional control. The questions will be administered to a random sample of 1500 men and 1500 women ages 18–50. The survey instrument has been developed specifically for this study.

The overall benefit of this project is to determine the optimal order for asking questions about IPV victimization and perpetration and to compare and select the most useful context for introducing IPV questions (*i.e.*, health *vs.* crime *vs.* family conflict). Ultimately, this knowledge will assist the CDC in establishing an ongoing data collection system for monitoring IPV victimization and perpetration. CDC, National Center for Injury Prevention and Control (NCIPC) intends to contract with an agency to conduct the survey. The only cost to the respondents is the time involved to complete the survey.

Respondent	No. of respondents	No. of responses per respondent	Avg. burden number per responses (in hours)	Total burden hours
Female	1500	1	45/60	1125
Male	1500	1	45/60	1125
Total	3,000			2250

Dated: November 24, 2004.

B. Kathy Skipper,

Acting Director, Management Analysis and Services Office, Centers for Disease Control and Prevention.

[FR Doc. 04–26488 Filed 11–30–04; 8:45 am]

BILLING CODE 4163–18–P

DEPARTMENT OF HEALTH AND HUMAN SERVICES

Centers for Disease Control and Prevention

[60Day–05AL]

Proposed Data Collections Submitted for Public Comment and Recommendations

In compliance with the requirement of section 3506(c)(2)(A) of the Paperwork Reduction Act of 1995 for opportunity for public comment on proposed data collection projects, the Centers for Disease Control and Prevention (CDC) will publish periodic summaries of proposed projects. To request more information on the proposed projects or to obtain a copy of the data collection plans and instruments, call 404–498–1210 or send comments to Seleda Perryman, CDC Assistant Reports Clearance Officer, 1600 Clifton Road, MS–E11, Atlanta, GA 30333 or send an e-mail to *omb@cdc.gov*.

Comments are invited on: (a) Whether the proposed collection of information is necessary for the proper performance of the functions of the agency, including whether the information shall have practical utility; (b) the accuracy of the agency's estimate of the burden of the proposed collection of information; (c) ways to enhance the quality, utility, and clarity of the information to be collected; and (d) ways to minimize the burden of the collection of information on respondents, including through the use of automated collection techniques or other forms of information technology. Written comments should be received within 60 days of this notice.

Proposed Project

Evaluation and Assessment of the Effectiveness of Activities Supporting Fire Prevention and Safety—New—National Center for Injury Prevention and Control (NCIPC), Centers for Disease Control and Prevention (CDC).

This project will evaluate the effect of fire safety and prevention education for second grade children and identify program components that contribute to successful outcomes. The fire safety prevention education programs are delivered by fire department personnel and funded by the United States Fire Administration's (USFA) Assistance to Firefighters Grant Program (AFGP). Deaths from fires and burns are the sixth most common cause of unintentional injury-related deaths in the United States with over three-fourths of fire-related deaths and three-fourths of fire-related injuries resulting from house fires. Children are particularly at high risk for injury with residential fire death rates approximately two times that of adult age groups. The prevention programs that are funded by AFGP provide local fire departments with resources to conduct fire safety education for elementary school children. None of these programs has been systematically evaluated to determine impact on fire safety knowledge, skills, and behaviors. The proposed project does not assume a direct link from knowledge, skills, and behaviors to reductions in fire death rates; however, these intermediate outcomes may predispose and enable children to protect themselves from fire-related injury.

Children's knowledge, skills, and behaviors will be studied as a function of time (pre-, immediate post-, and 6 month post-), geographic setting (urban, rural, suburban) and instructional format (classroom, safety trailer, classroom + safety trailer, none). The design used in this study is a 3×4 factorial design with repeated measures. A survey will be used to assess children's fire safety knowledge, skills, and behaviors. Information will also be collected from the children's parents on fire safety activities within the home.

Teachers, school administrators, and the fire fighters delivering the program will complete surveys to gather information on messages delivered, props used, and possible additional exposures to fire safety education. Information will also be collected regarding the school and Fire Department personnel's perception of program sustainability and the relationship between the Fire Department and school. The only cost to the respondents is the time involved to complete the survey.

Respondents	Number of respondents	Number of responses/respondent	Average burden/response (in hrs)	Total burden hours
Fire Fighters	24	2	15/60	12
2nd Grade Children	1920	3	20/60	1920
Parents of 2nd Grade Children	1920	2	10/60	640
Teachers of 2nd Grade Children	96	2	15/60	48
School Administrators	48	1	20/60	16
Total				2636

Dated: November 24, 2004.

B. Kathy Skipper,

Acting Director, Management Analysis and Services Office, Centers for Disease Control and Prevention.

[FR Doc. 04–26489 Filed 11–30–04; 8:45 am]

BILLING CODE 4163–18–U

DEPARTMENT OF HEALTH AND HUMAN SERVICES

Centers for Disease Control and Prevention

National Institute for Occupational Safety and Health Advisory Board on Radiation and Worker Health

In accordance with section 10(a)(2) of the Federal Advisory Committee Act (Pub. L. 92–463), the Centers for Disease Control and Prevention (CDC) announces the following committee meeting:

Name: Advisory Board on Radiation and Worker Health (ABRWH), National Institute for Occupational Safety and Health (NIOSH).

Subcommittee Meeting Time and Date: 8:30 a.m.–9:30 a.m., December 13, 2004.

Committee Meeting Times and Dates: 9:45 a.m.–4:30 p.m., December 13, 2004; 8 a.m.–4:30 p.m., December 14, 2004; 7 p.m.–8:30 p.m., December 14, 2004; 8:30 a.m.–4:30 p.m., December 15, 2004.

Place: The DoubleTree Club Hotel, 720 Las Flores Road, Livermore, California 94551, telephone 925/443–4950, fax 925/449–9059.

Status:

Subcommittee Meeting Time and Date: Open 8:30 a.m.–9:30 a.m., December 13, 2004.

Committee Meeting Times and Dates: Open 9:45 a.m.–1 p.m., December 13, 2004; Closed 1 p.m.–4:30 p.m., December 13, 2004; Open 8 a.m.–4:30 p.m., December 14, 2004; Open 7 p.m.–8:30 p.m., December 14, 2004; Open 8:30 a.m.–4:30 p.m., December 15, 2004; The open portions of the meeting are limited only by the space available. The meeting room accommodates approximately 65 people.

Background

The ABRWH was established under the Energy Employees Occupational Illness Compensation Program Act (EEOICPA) of 2000 to advise the President, on a variety of policy and technical functions required to implement and effectively manage the new compensation program. Key functions of the Board include providing advice on the development of probability of causation guidelines which have been promulgated by HHS as a final rule, advice on methods of dose reconstruction which have also been promulgated by HHS as a final rule, advice on the scientific validity and quality of dose estimation and reconstruction efforts being performed for purposes of the compensation program, and advice on petitions to add classes of workers to the Special Exposure Cohort (SEC). In December 2000 the President delegated responsibility for funding, staffing, and operating the Board to HHS, which subsequently delegated this authority to the CDC. NIOSH implements this responsibility for CDC. The charter was issued on August 3, 2001, and renewed on August 3, 2003.

Purpose

This board is charged with (a) providing advice to the Secretary, HHS, on the development of guidelines under Executive Order 13179; (b) providing advice to the Secretary, HHS, on the scientific validity and quality of dose reconstruction efforts performed for this Program; and (c) upon request by the Secretary, HHS, advise the Secretary on whether there is a class of employees at any Department of Energy facility who were exposed to radiation but for whom it is not feasible to estimate their radiation dose, and on whether there is reasonable likelihood that such radiation doses may have endangered the health of members of this class.

Matters to Be Discussed

The agenda for this meeting will focus on Program Status Reports from NIOSH and the Department of Labor, Contract Process and Requirements, Board Discussion of Case Reviews, Subcommittee Report and Recommendations, Site Profile Review, NIOSH's Response to Site Profile Review, SEC Petition Process Procedures, SEC Petition Evaluation Review Plan Workgroup Report, Scientific Research Issues Update, and a Board working session. There will be an evening public comment period scheduled for December 14, 2004, and a public comment period on December 15, 2004.

The Subcommittee will convene on December 13, 2004, from 8:30 a.m.–9:30 a.m. and will focus on review of draft minutes and selection of Individual Dose Reconstruction Cases for Board Review.

The closed portion of the meeting on December 13th will involve discussion of individual dose reconstruction case reviews, and is required to avoid the public disclosure of confidential information and claimant's privacy.

The agenda is subject to change as priorities dictate.

FOR FURTHER INFORMATION CONTACT: Larry Elliott, Executive Secretary, ABRWH, NIOSH, CDC, 4676 Columbia Parkway, Cincinnati, Ohio 45226, telephone 513/533–6825, fax 513/533–6826.

The Director, Management Analysis and Services Office, has been delegated the authority to sign **Federal Register** notices pertaining to announcements of meetings and other committee management activities for both CDC and the Agency for Toxic Substances and Disease Registry.

Dated: November 24, 2004.

B. Kathy Skipper,

Acting Director, Management Analysis and Services Office, Centers for Disease Control and Prevention.

[FR Doc. 04–26490 Filed 11–30–04; 8:45 am]

BILLING CODE 4163–19–P

DEPARTMENT OF HEALTH AND HUMAN SERVICES

Food and Drug Administration

[Docket No. 2004N–0062]

Agency Information Collection Activities; Announcement of Office of Management and Budget Approval; Color Additive Certification Requests and Recordkeeping

AGENCY: Food and Drug Administration, HHS.

ACTION: Notice.

SUMMARY: The Food and Drug Administration (FDA) is announcing that a collection of information entitled ''Color Additive Certification Requests and Recordkeeping'' has been approved by the Office of Management and Budget (OMB) under the Paperwork Reduction Act of 1995.

FOR FURTHER INFORMATION CONTACT: Peggy Robbins, Office of Management Programs (HFA–250), Food and Drug Administration, 5600 Fishers Lane, Rockville, MD 20857, 301–827–1223.

SUPPLEMENTARY INFORMATION: In the **Federal Register** of July 19, 2004 (69 FR 42998), the agency announced that the proposed information collection had been submitted to OMB for review and clearance under 44 U.S.C. 3507. An agency may not conduct or sponsor, and a person is not required to respond to, a collection of information unless it displays a currently valid OMB control number. OMB has now approved the information collection and has assigned OMB control number 0910–0216. The approval expires on November 30, 2007. A copy of the supporting statement for this information collection is available on the Internet at *http://www.fda.gov/ohrms/dockets*.

Dated: November 19, 2004.

Jeffrey Shuren,

Assistant Commissioner for Policy.

[FR Doc. 04–26441 Filed 11–30–04; 8:45 am]

BILLING CODE 4160–01–S

DEPARTMENT OF HEALTH AND HUMAN SERVICES

Health Resources and Services Administration

National Vaccine Injury Compensation Program: Inclusion of Hepatitis A Vaccines in the Vaccine in the Injury Table

AGENCY: Health Resources and Services Administration (HRSA), HHS.

ACTION: Notice.

SUMMARY: Through this notice, the Secretary of Health and Human Services announces that Hepatitis A vaccines are covered vaccines under the National Vaccine Injury Compensation Program (VICP), which provides a system of no-fault compensation for certain individuals who have been injured by covered childhood vaccines. This notice serves to include Hepatitis A vaccines as covered vaccines under Category XIV (new vaccines) of the Vaccine Injury Table (Table), which lists the vaccines covered under the VICP. This notice ensures that petitioners may file petitions relating to Hepatitis A

vaccines with the VICP even before such vaccines are added as a separate and distinct category to the Table through rulemaking.

DATES: This Notice is effective on December 1, 2004. As described below, Hepatitis A vaccines will be covered under the VICP on December 1, 2004.

FOR FURTHER INFORMATION CONTACT: Geoffrey Evans, M.D., Medical Director, Division of Vaccine Injury Compensation, Healthcare Systems Bureau, Health Resources and Services Administration, Parklawn Building, Room 11C–26, 5600 Fishers Lane, Rockville, Maryland 20857; telephone number (301) 443–4198.

SUPPLEMENTARY INFORMATION: The statute authorizing the VICP provides for the inclusion of additional vaccines in the VICP when they are recommended by the Centers for Disease Control and Prevention (CDC) to the Secretary for routine administration to children. See section 2114(e)(2) of the Public Health Service (PHS) Act, 42 U.S.C. 300aa–14(e)(2). Consistent with section 13632(a)(3) of Public Law 103–66, the regulations governing the VICP provide that such vaccines will be included in the Table as covered vaccines as of the effective date of an excise tax to provide funds for the payment of compensation with respect to such vaccines (42 CFR 100.3(c)(5)).

The two prerequisites for adding Hepatitis A vaccines to the VICP as covered vaccines as well as to the Table have been satisfied. First, the CDC published its recommendation that Hepatitis A vaccines be routinely administered to certain children in the October 1, 1999, issue of the Morbidity and Mortality Weekly Report (MMWR). Specifically, the CDC recommended that all children in States, counties, and communities with rates of Hepatitis A that are twice the 1987–1997 national average or greater (*i.e.*, greater than or equal to 20 cases per 100,000 population) receive the Hepatitis A vaccine.

Second, on October 22, 2004, the excise tax for Hepatitis A vaccines was enacted by Public Law 108–357, the ''American Jobs Creation Act of 2004.'' Section 889 of this Act adds all vaccines against Hepatitis A to section 4132(a)(1) of the Internal Revenue Code of 1986, which defines all taxable vaccines. Unlike the CDC's recommendation, the American Jobs Creation Act of 2004 does not distinguish between Hepatitis A vaccines administered in areas in which rates of Hepatitis A are at least twice the national average and Hepatitis A vaccines administered in other areas of the country. For this reason, all Hepatitis A vaccines manufactured or produced in the United States, or entered into the United States for consumption, use, or warehousing, will be subject to this excise tax (26 U.S.C. 4132(a)(1)).

Under the regulations governing the VICP, Item XIV of the Table specifies that ''[a]ny new vaccine recommended by the Centers for Disease Control and Prevention for routine administration to children, after publication by the Secretary of a notice of coverage'' is a covered vaccine under the Table. (42 CFR 100.3(a), Item XIV.) As explained above, the CDC's recommendation was accepted. This notice serves to satisfy the regulation's publication requirement. Through this notice, Hepatitis A vaccines are included as covered vaccines under Category XIV of the Table. As explained above, because the American Jobs Creation Act of 2004 enacted an excise tax for Hepatitis A vaccines administered throughout the United States, all Hepatitis A vaccines will be covered under the VICP and under the Table.

Under section 2114(e) of the PHS Act, as amended by section 13632(a) of the Omnibus Budget Reconciliation Act of 1993, coverage for a vaccine recommended by the CDC for routine administration to children shall take effect upon the effective date of the tax enacted to provide funds for compensation with respect to the vaccine included as a covered vaccine in the Table. The American Jobs Creation Act of 2004 provides that the addition of Hepatitis A vaccines to the list of taxable vaccines applies to sales and uses on or after the first day of the first month which begins more than 4 weeks after the date of the enactment of the Act. It further provides that if the vaccines were sold before or on the effective date of the excise tax, but delivered after this date, the delivery date of such vaccines shall be considered the sale date. Because the American Jobs Creation Act of 2004 was enacted on October 22, 2004, the effective date of the excise tax adding Hepatitis A vaccines as taxable vaccines is December 1, 2004. Thus, Hepatitis A vaccines are included as covered vaccines under Category XIV of the Table as of December 1, 2004. Petitioners may file petitions related to Hepatitis A vaccines as of December 1, 2004.

Petitions filed concerning vaccine-related injuries or deaths associated with Hepatitis A vaccines must, of course, be filed within the applicable statute of limitations. The statutes of limitations applicable to petitions filed with the VICP are set out in section 2116(a) of the PHS Act (42 U.S.C. 300aa–16(a)). In addition, section 2116(b) of the PHS Act lays out specific exceptions to these statutes of limitations that apply when the effect of a revision to the Table makes a previously ineligible person eligible to receive compensation or when an eligible person's likelihood of obtaining compensation significantly increases. Under this provision, a person who may be eligible to file a petition based on the addition of a new vaccine under Category XIV of the Table may file a petition for compensation not later than 2 years after the effective date of the revision if the injury or death occurred not more than 8 years before the effective date of the revision of the Table (42 U.S.C. 300aa–16(b)). Thus, persons whose petitions may not satisfy the limitations periods described in section 2116(a) of the PHS Act may still file petitions concerning vaccine-related injuries or deaths associated with Hepatitis A vaccines until December 1, 2006, as long as the vaccine-related injury or death occurred on or after December 1, 1996 (8 years prior to the effective date of the addition that included Hepatitis A as a covered vaccine).

The Secretary plans to amend the Table through the rulemaking process by including Hepatitis A vaccines as a separate category of vaccines in the Table. December 1, 2004, will remain the applicable effective date when the Secretary makes a corresponding amendment to add Hepatitis A vaccines as a separate category on the Table through rulemaking.

Dated: November 22, 2004.

Elizabeth M. Duke,

Administrator, HRSA.

[FR Doc. 04–26273 Filed 11–30–04; 8:45 am]

BILLING CODE 4165–15–P

DEPARTMENT OF HEALTH AND HUMAN SERVICES

Substance Abuse and Mental Health Services Administration

Current List of Laboratories Which Meet Minimum Standards To Engage in Urine Drug Testing for Federal Agencies

AGENCY: Substance Abuse and Mental Health Services Administration, HHS.

ACTION: Notice.

SUMMARY: The Department of Health and Human Services (HHS) notifies Federal agencies of the laboratories currently certified to meet the standards of subpart C of the Mandatory Guidelines

for Federal Workplace Drug Testing Programs (Mandatory Guidelines). The Mandatory Guidelines were first published in the **Federal Register** on April 11, 1988 (53 FR 11970), and subsequently revised in the **Federal Register** on June 9, 1994 (59 FR 29908), on September 30, 1997 (62 FR 51118), and on April 13, 2004 (69 FR 19644).

A notice listing all currently certified laboratories is published in the **Federal Register** during the first week of each month. If any laboratory's certification is suspended or revoked, the laboratory will be omitted from subsequent lists until such time as it is restored to full certification under the Mandatory Guidelines.

If any laboratory has withdrawn from the HHS National Laboratory Certification Program (NLCP) during the past month, it will be listed at the end, and will be omitted from the monthly listing thereafter.

This notice is also available on the Internet at *http://workplace.samhsa.gov* and *http://www.drugfreeworkplace.gov*.

FOR FURTHER INFORMATION CONTACT: Mrs. Giselle Hersh or Dr. Walter Vogl, Division of Workplace Programs, SAMHSA/CSAP, Room 2–1035, 1 Choke Cherry Road, Rockville, Maryland 20857; 240–276–2600 (voice), 240–276–2610 (fax).

SUPPLEMENTARY INFORMATION: The Mandatory Guidelines were developed in accordance with Executive Order 12564 and section 503 of Pub. L. 100–71. Subpart C of the Mandatory Guidelines, ''Certification of Laboratories Engaged in Urine Drug Testing for Federal Agencies,'' sets strict standards that laboratories must meet in order to conduct drug and specimen validity tests on urine specimens for Federal agencies. To become certified, an applicant laboratory must undergo three rounds of performance testing plus an on-site inspection. To maintain that certification, a laboratory must participate in a quarterly performance testing program plus undergo periodic, on-site inspections.

Laboratories which claim to be in the applicant stage of certification are not to be considered as meeting the minimum requirements described in the HHS Mandatory Guidelines. A laboratory must have its letter of certification from HHS/SAMHSA (formerly: HHS/NIDA) which attests that it has met minimum standards.

In accordance with subpart C of the Mandatory Guidelines dated April 13, 2004 (69 FR 19644), the following laboratories meet the minimum standards to conduct drug and specimen validity tests on urine specimens:

ACL Laboratories, 8901 W. Lincoln Ave., West Allis, WI 53227, 414–328–7840/800–877–7016 (Formerly: Bayshore Clinical Laboratory).

ACM Medical Laboratory, Inc., 160 Elmgrove Park, Rochester, NY 14624, 585–429–2264.

Advanced Toxicology Network, 3560 Air Center Cove, Suite 101, Memphis, TN 38118, 901–794–5770/888–290–1150.

Aegis Analytical Laboratories, Inc., 345 Hill Ave., Nashville, TN 37210, 615–255–2400.

Baptist Medical Center—Toxicology Laboratory, 9601 I–630, Exit 7, Little Rock, AR 72205–7299, 501–202–2783 (Formerly: Forensic Toxicology Laboratory Baptist Medical Center).

Clinical Reference Lab, 8433 Quivira Rd., Lenexa, KS 66215–2802, 800–445–6917.

Diagnostic Services Inc., dba DSI, 12700 Westlinks Dr., Fort Myers, FL 33913, 239–561–8200/800–735–5416.

Doctors Laboratory, Inc., 2906 Julia Drive, Valdosta, GA 31602, 229–671–2281.

DrugProof, Division of Dynacare/Laboratory of Pathology, LLC, 1229 Madison St., Suite 500, Nordstrom Medical Tower, Seattle, WA 98104, 206–386–2661/800–898–0180, (Formerly: Laboratory of Pathology of Seattle, Inc., DrugProof, Division of Laboratory of Pathology of Seattle, Inc.).

DrugScan, Inc., P.O. Box 2969, 1119 Mearns Rd., Warminster, PA 18974, 215–674–9310.

Dynacare Kasper Medical Laboratories*, 10150–102 St., Suite 200, Edmonton, Alberta, Canada T5J 5E2, 780–451–3702/800–661–9876.

ElSohly Laboratories, Inc., 5 Industrial Park Dr., Oxford, MS 38655, 662–236–2609.

Express Analytical Labs, 3405 7th Ave., Suite 106, Marion, IA 52302, 319–377–0500.

General Medical Laboratories, 36 South Brooks St., Madison, WI 53715, 608–267–6225.

Kroll Laboratory Specialists, Inc., 1111 Newton St., Gretna, LA 70053, 504–361–8989/800–433–3823, (Formerly: Laboratory Specialists, Inc.).

LabOne, Inc., 10101 Renner Blvd., Lenexa, KS 66219, 913–888–3927/800–873–8845, (Formerly: Center for Laboratory Services, a Division of LabOne, Inc.).

LabOne, Inc., d/b/a Northwest Toxicology, 1141 E. 3900 S., Salt Lake City, UT 84124, 801–293–2300/800–322–3361, (Formerly: NWT Drug Testing, NorthWest Toxicology, Inc.; Northwest Drug Testing, a division of NWT Inc.).

Laboratory Corporation of America Holdings, 7207 N. Gessner Rd., Houston, TX 77040, 713–856–8288/800–800–2387.

Laboratory Corporation of America Holdings, 69 First Ave., Raritan, NJ 08869, 908–526–2400/800–437–4986, (Formerly: Roche Biomedical Laboratories, Inc.).

Laboratory Corporation of America Holdings, 1904 Alexander Dr., Research Triangle Park, NC 27709, 919–572–6900/800–833–3984, (Formerly: LabCorp Occupational Testing Services, Inc., CompuChem Laboratories, Inc.; CompuChem Laboratories, Inc., A Subsidiary of Roche Biomedical Laboratory; Roche CompuChem Laboratories, Inc., A Member of the Roche Group).

Laboratory Corporation of America Holdings, 10788 Roselle St., San Diego, CA 92121, 800–882–7272 (Formerly: Poisonlab, Inc.).

Laboratory Corporation of America Holdings, 1120 Main Street, Southaven, MS 38671, 866–827–8042/800–233–6339, (Formerly: LabCorp Occupational Testing Services, Inc.; MedExpress/National Laboratory Center).

Marshfield Laboratories, Forensic Toxicology Laboratory, 1000 North Oak Ave., Marshfield, WI 54449, 715–389–3734/800–331–3734.

MAXXAM Analytics Inc.,* 6740 Campobello Road, Mississauga, ON, Canada L5N 2L8, 905–817–5700, (Formerly: NOVAMANN (Ontario) Inc.).

MedTox Laboratories, Inc., 402 W. County Rd. D, St. Paul, MN 55112, 651–636–7466/800–832–3244.

MetroLab-Legacy Laboratory Services, 1225 NE 2nd Ave., Portland, OR 97232, 503–413–5295/800–950–5295.

Minneapolis Veterans Affairs Medical Center, Forensic Toxicology Laboratory, 1 Veterans Dr., Minneapolis, MN 55417, 612–725–2088.

National Toxicology Laboratories, Inc., 1100 California Ave., Bakersfield, CA 93304, 661–322–4250/800–350–3515.

One Source Toxicology Laboratory, Inc., 1213 Genoa-Red Bluff, Pasadena, TX 77504, 888–747–3774, (Formerly: University of Texas Medical Branch, Clinical Chemistry Division; UTMB Pathology-Toxicology Laboratory).

Oregon Medical Laboratories, P.O. Box 972, 722 East 11th Ave., Eugene, OR 97440–0972, 541–687–2134.

Pacific Toxicology Laboratories, 9348 DeSoto Ave., Chatsworth, CA 91311, 800–328–6942, (Formerly: Centinela Hospital Airport Toxicology Laboratory).

Pathology Associates Medical Laboratories, 110 West Cliff Dr., Spokane, WA 99204, 509–755–8991/800–541–7897 x7.
Physicians Reference Laboratory, 7800 West 110th St., Overland Park, KS 66210, 913–339–0372/800–821–3627.
Quest Diagnostics Incorporated, 3175 Presidential Dr., Atlanta, GA 30340, 770–452–1590/800–729–6432, (Formerly: SmithKline Beecham Clinical Laboratories; SmithKline Bio-Science Laboratories).
Quest Diagnostics Incorporated, 4770 Regent Blvd., Irving, TX 75063, 800–824–6152, (Moved from the Dallas location on 03/31/01; Formerly: SmithKline Beecham Clinical Laboratories; SmithKline Bio-Science Laboratories).
Quest Diagnostics Incorporated, 4230 South Burnham Ave., Suite 250, Las Vegas, NV 89119–5412, 702–733–7866/800–433–2750, (Formerly: Associated Pathologists Laboratories, Inc.).
Quest Diagnostics Incorporated, 400 Egypt Rd., Norristown, PA 19403, 610–631–4600/877–642–2216, (Formerly: SmithKline Beecham Clinical Laboratories; SmithKline Bio-Science Laboratories).
Quest Diagnostics Incorporated, 506 E. State Pkwy., Schaumburg, IL 60173, 800–669–6995/847–885–2010, (Formerly: SmithKline Beecham Clinical Laboratories; International Toxicology Laboratories).
Quest Diagnostics Incorporated, 7600 Tyrone Ave., Van Nuys, CA 91405, 818–989–2520/800–877–2520, (Formerly: SmithKline Beecham Clinical Laboratories).
Scientific Testing Laboratories, Inc., 450 Southlake Blvd., Richmond, VA 23236, 804–378–9130.
Sciteck Clinical Laboratories, Inc., 317 Rutledge Rd., Fletcher, NC 28732, 828–650–0409.
S.E.D. Medical Laboratories, 5601 Office Blvd., Albuquerque, NM 87109, 505–727–6300/800–999–5227.
South Bend Medical Foundation, Inc., 530 N. Lafayette Blvd., South Bend, IN 46601, 574–234–4176 x276.
Southwest Laboratories, 4645 E. Cotton Center Boulevard, Suite 177, Phoenix, AZ 85040, 602–438–8507/800–279–0027.
Sparrow Health System, Toxicology Testing Center, St. Lawrence Campus, 1210 W. Saginaw, Lansing, MI 48915, 517–364–7400, (Formerly: St. Lawrence Hospital & Healthcare System).
St. Anthony Hospital Toxicology Laboratory, 1000 N. Lee St., Oklahoma City, OK 73101, 405–272–7052.
Toxicology & Drug Monitoring Laboratory, University of Missouri Hospital & Clinics, 301 Business Loop 70 West, Suite 208, Columbia, MO 65203, 573–882–1273.
Toxicology Testing Service, Inc., 5426 N.W. 79th Ave., Miami, FL 33166, 305–593–2260.
U.S. Army Forensic Toxicology Drug Testing Laboratory , 2490 Wilson St., Fort George G. Meade, MD 20755–5235, 301–677–7085.

Anna Marsh,

Executive Officer, SAMHSA.

[FR Doc. 04–26426 Filed 11–30–04; 8:45 am]

BILLING CODE 4160–20–P

DEPARTMENT OF THE INTERIOR

Bureau of Land Management

[NV–912–05–1990–PO–241A–006F]

Sierra Front-Northwestern Great Basin Resource Advisory Council; Notice of Meeting Location and Time

AGENCY: Bureau of Land Management, Interior.

ACTION: Notice of meeting location and time for the Sierra Front-Northwestern Great Basin Resource Advisory Council (Nevada).

SUMMARY: In accordance with the Federal Land Policy and Management Act and the Federal Advisory Committee Act of 1972 (FACA), a meeting of the U.S. Department of the Interior, Bureau of Land Management (BLM) Sierra Front-Northwestern Great Basin Resource Advisory Council (RAC), Nevada, will be held as indicated below. Topics for discussion at the meeting will include, but are not limited to: Manager's reports of current field office activities; review of the BLM's Resource Management Planning Process; review of the Pine Nut Mountain RMP Amendment DEIS; a review of Native American tribe consultation procedures; review of proposed 2005 Wild Horse Herd Management Area gathers in the Northwest Great Basin; a panel discussion on water resources transportation issues in Nevada; and additional topics the council may raise during the meeting.

Date & Time: The RAC will meet on Thursday, January 27, 2005, from 9 a.m. to 5 p.m., at the BLM-Carson City Field Office, 5665 Morgan Mill Road, Carson City, Nevada; and on Friday, January 28, 2005, from 8 a.m. to 12 p.m., at the BLM-Nevada State Office, Great Basin A&B Conference Room, 1340 Financial Blvd., Reno, Nevada. All meetings are open to the public. A general public comment period, where the public may submit oral or written comments to the RAC, will be held at 4 p.m. on January 27, 2005.

A final detailed agenda, with any additions/corrections to agenda topics, will be available on the Internet no later than January 13, 2005, at *http://www.nv.blm.gov/rac;* hard copies can also be mailed or sent via FAX. Individuals who need special assistance such as sign language interpretation or other reasonable accommodations, or who wish a hard copy of the agenda, should contact Mark Struble, Carson City Field Office, 5665 Morgan Mill Road, Carson City, NV 89701, telephone (775) 885–6107, no later than January 13, 2005.

FOR FURTHER INFORMATION CONTACT: Mark Struble, Public Affairs Officer, BLM Carson City Field Office, 5665 Morgan Mill Road, Carson City, NV 89701. Telephone: (775) 885–6107. E-mail: *mstruble@nv.blm.gov.*

Dated: November 23, 2004.

Don Hicks,

Field Office Manager, BLM-Carson City Field Office.

[FR Doc. 04–26491 Filed 11–30–04; 8:45 am]

BILLING CODE 4310–HC–P

---

* The Standards Council of Canada (SCC) voted to end its Laboratory Accreditation Program for Substance Abuse (LAPSA) effective May 12, 1998. Laboratories certified through that program were accredited to conduct forensic urine drug testing as required by U.S. Department of Transportation (DOT) regulations. As of that date, the certification of those accredited Canadian laboratories will continue under DOT authority. The responsibility for conducting quarterly performance testing plus periodic on-site inspections of those LAPSA-accredited laboratories was transferred to the U.S. HHS, with the HHS' NLCP contractor continuing to have an active role in the performance testing and laboratory inspection processes. Other Canadian laboratories wishing to be considered for the NLCP may apply directly to the NLCP contractor just as U.S. laboratories do.

Upon finding a Canadian laboratory to be qualified, HHS will recommend that DOT certify the laboratory (**Federal Register**, July 16, 1996) as meeting the minimum standards of the Mandatory Guidelines published in the **Federal Register** on April 13, 2004 (69 FR 19644). After receiving DOT certification, the laboratory will be included in the monthly list of HHS certified laboratories and participate in the NLCP certification maintenance program.

DEPARTMENT OF THE INTERIOR

Office of Surface Mining Reclamation and Enforcement

Black Mesa and Kayenta Mines, Life-of-Mine Plans and Water Supply Project, Coconino, Navajo, and Mohave Counties, AZ, and Clark County, NV

AGENCY: Office of Surface Mining Reclamation and Enforcement, Interior.

ACTION: Notice of intent to prepare an environmental impact statement and to hold public scoping meetings.

SUMMARY: Pursuant to the National Environmental Policy Act of 1969 (NEPA), the Office of Surface Mining Reclamation and Enforcement (OSM), as the lead Federal agency, plans to prepare an environmental impact statement (EIS) to analyze the effects of Peabody Western Coal Company's proposed operation and reclamation plans for the Black Mesa and Kayenta coal mines; the Coal Slurry Preparation Plant at the Black Mesa Mine; the reconstruction of the 273-mile long Coal Slurry Pipeline across northern Arizona from the Coal Slurry Preparation Plant to the Mohave Generating Station (electrical) in Laughlin, Nevada; the construction and operation of water wells in the Coconino aquifer (C-aquifer) northwest of Winslow, Arizona; and construction and operation of a water supply pipeline running about 120 miles across the Navajo and Hopi Reservations from the wells to the Coal Slurry Preparation Plant.

The Hopi Tribe, Navajo Nation, Bureau of Indian Affairs (BIA), Bureau of Land Management (BLM), Bureau of Reclamation (BOR), U.S. Environmental Protection Agency (USEPA); U.S. Department of Agriculture Forest Service (USFS), County of Mohave, Arizona; and City of Kingman, Arizona, will cooperate with OSM in the preparation of the EIS.

OSM solicits public comments on the scope of the EIS and significant issues that should be addressed in the EIS.

At *http://www.wrcc.osmre.gov/bmk-eis*, interested persons may view information about the proposed projects; the comment period during which persons may submit comments; the locations, dates, and times of public scoping meetings; and the procedures that OSM will follow at the scoping meetings.

DATES: Written comments must be received by OSM by 4 p.m. on January 21, 2005, to ensure consideration in the preparation of the draft EIS.

Public scoping meetings will be held in:

- Saint Michaels, Arizona, on Monday, January 3, 2005, from 6 p.m. to 10 p.m. at the Saint Michaels Chapter House on Indian Route 12 about 2 miles south and west of Window Rock, Arizona.
- Forest Lake, Arizona, on Tuesday, January 4, 2005, from 12 p.m. to 4 p.m. at the Forest Lake Chapter House on Navajo Route 41 about 20 miles north of Pinon, Arizona.
- Kayenta, Arizona, on Tuesday, January 4, 2005, from 6 p.m. to 10 p.m. at the Kayenta Chapter House on Highway 163 at the intersection with Navajo Route 6485, Kayenta, Arizona.
- Kykotsmovi, Arizona, on Wednesday, January 5, 2005, from 6 p.m. to 10 p.m. at the Community Center, Kykotsmovi, Arizona.
- Leupp, Arizona, on Thursday, January 6, 2005, from 12 p.m. to 4 p.m. at the Leupp Chapter House on Navajo Route 15, Leupp, Arizona.
- Kingman, Arizona, Wednesday, January 12, 2005, from 12 p.m. to 4 p.m. at the Mohave County Board Room, Negus Building, 809 E. Beale Street, Kingman, Arizona.
- Laughlin, Nevada, on Wednesday, January 12, 2005, from 6 p.m. to 10 p.m. at the Laughlin Town Hall, 101 Civic Way, Laughlin, Nevada.
- Flagstaff, Arizona, on Thursday, January 13, 2005, from 6 p.m. to 10 p.m. at the Coconino County Board Room, 219 E. Cherry, Flagstaff, Arizona.

ADDRESSES: Comments may be submitted in writing or by e-mail. At the top of your letter or in the subject line of your e-mail message, please indicate that the comments are ''BMK EIS Comments.''

- E-mail comments should be sent to: *BMK-EIS@osmre.gov*.
- Written comments sent by first-class or priority U.S. Postal Service should be mailed to: Richard Holbrook, Chief, Southwest Branch, OSM WRCC, P.O. Box 46667, Denver, Colorado 80201–6667.
- Comments delivered by U.S. Postal Service Express Mail or by courier service should be sent to: Richard Holbrook, Chief, Southwest Branch, OSM WRCC, 1999 Broadway, Suite 3320, Denver, Colorado 80202–5733.

FOR FURTHER INFORMATION CONTACT: Richard Holbrook, Chief, Southwest Branch, Program Support Division, OSM Western Regional Coordinating Center, by telephone at (303) 844–1400, extension 1491, or by e-mail at *BMK–EIS@osmre.gov*.

SUPPLEMENTARY INFORMATION:

I. Background on the Black Mesa and Kayenta Mines
II. Proposals for the Mines, Coal Slurry Pipeline, and C-Aquifer Water Supply System
III. Decisions to Be Made by OSM and the Cooperating Agencies
IV. Public Comment Procedures

I. Background on the Black Mesa and Kayenta Mines

The contiguous Black Mesa and Kayenta surface coal mines have operated since 1970 and 1973, respectively. Peabody Western Coal Company operates the mines on three leaseholds comprising about 65,000 acres within the boundaries of the Navajo and Hopi Reservations. The mines are located on the Black Mesa about 125 miles northeast of Flagstaff, Arizona, and 10 miles southwest of Kayenta, Arizona. The Kayenta Mine produces about 8.5 million tons of coal per year, all of which are delivered to the Navajo Generating Station near Page, Arizona, by electric railroad. Currently, the Kayenta Mine is to provide coal to the Navajo Generating Station through 2011. The Black Mesa Mine produces about 4.8 million tons of coal annually, all of which are delivered to the Mohave Generating Station at Laughlin, Nevada, through the 273-mile long Coal Slurry Pipeline originating at the Black Mesa Coal Slurry Preparation Plant. Currently, the Black Mesa Mine is to provide coal to the Mohave Generating Station through 2005.

Black Mesa Pipeline, Inc., operates the Coal Slurry Preparation Plant and the Coal Slurry Pipeline that transports coal from the Black Mesa Mine to the Mohave Generating Station. Currently, about 3,100 acre-feet of water from Peabody Western Coal Company's wells in the Navajo aquifer (N-aquifer) are used annually to slurry the coal.

II. Proposals for the Mines, Coal Slurry Pipeline, and C-Aquifer Water Supply System

In the past, public concern about the mines and related projects has centered on use of the N-aquifer water. Under the proposals, most of the water used by the Black Mesa and Kayenta Mines and Coal Slurry Pipeline would come from the C-aquifer rather than the N-aquifer. Peabody Western Coal Company would continue to pump some water from wells in the N-aquifer (about 500 acre-feet per year) for domestic uses at the mines, providing potable water for use by the local residents in the vicinity of the mines, and to ensure that the wells are functional in the event that they are needed for mining-related purposes or for the Coal Slurry Pipeline if there is a temporary or emergency disruption in

water delivery from the C-aquifer Water Supply System.

Peabody Western Coal Company's life-of-mine revision proposes that the Black Mesa and Kayenta Mines would continue mining through at least 2026. Mining methods would not change at either mine. The annual coal production rate at the Black Mesa Mine would increase from 4.8 million tons to 6.2 million tons and would remain unchanged at the Kayenta Mine. A coal wash plant would be constructed at the Black Mesa Mine to remove waste from the coal. The plant would extract about 0.8 million tons of waste from the coal each year. About 500 acre-feet of water would be used each year for washing the coal. Waste would be dewatered and disposed in the mining pits. The wastewater would be recycled through the wash plant. About 5.4 million tons of washed coal produced each year would be crushed and slurried with C-aquifer water at the Coal Slurry Preparation Plant and would be shipped to the Mohave Generating Station through the Coal Slurry Pipeline. Because of the increased coal production, the amount of water needed to slurry coal from the mine would increase from about 3,100 to 3,700 acre-feet per year. The Black Mesa Mine would use an additional 1,300 acre-feet of water for mine-related and domestic purposes (including coal washing). The Kayenta Mine would use an additional 800 acre-feet of water for mine-related and domestic purposes.

Black Mesa Pipeline, Inc., would replace about 95 percent of the 273-mile long Coal Slurry Pipeline because the existing pipeline is reaching its design life. The pipeline passes through the Navajo and Hopi Reservations; through Federal lands administered by the Bureau of Land Management and the U.S. Forest Service (Kaibab National Forest); through lands owned by the State of Arizona, the County of Mohave, Arizona, and the City of Kingman, Arizona; and through privately-owned lands. Pipeline reconstruction would involve decommissioning the existing buried pipeline (mostly leaving it in place) and burying a new coal slurry pipeline adjacent to the existing pipeline. Additional right-of-way width (about 15 feet) would be needed for construction activities along much of the 50-foot wide right-of-way. The new pipeline would pass under the Colorado River at Laughlin, Nevada and under the Little Colorado River east of Cameron, Arizona. The C-aquifer Water Supply System would provide an alternative water source to N-aquifer water currently used to slurry coal at the Black Mesa Preparation Plant and for mine-related uses at the Black Mesa Mine and Kayenta Mine. The system would be capable of providing 6,000 acre-feet per year for coal slurry and mine-related uses. Development of this water supply system would provide an opportunity to make water available to the Navajo Nation and Hopi Tribe for municipal and industrial uses by expanding the system. In anticipation of the potential future use of the system for tribal purposes, OSM anticipates that it would evaluate an alternative that provides an expanded delivery system and well configuration design for up to an additional 5,600 acre-feet per year (*i.e.*, up to a total capacity of 11,600 acre-feet per year). The additional capacity would allow future spur pipelines to be constructed to Navajo and Hopi communities.

Major components of the C-aquifer Water Supply System would include:

- A well field in the southwest part of the Navajo Reservation (southwest of Leupp, Arizona) and, possibly, a well field on Hopi-owned lands immediately south of the Navajo Reservation well field, consisting of approximately 20 production wells (for the 11,600 acre-foot maximum capacity) and associated collector pipelines.
- An approximately 120-mile long main pipeline from the well field(s) north-northeast to the Black Mesa Mine following, to the extent possible, existing roads.
- Associated facilities (*e.g.*, an estimated five pump stations, access roads and electrical transmission lines).

III. Decisions To Be Made by OSM and the Cooperating Agencies

Under applicable laws, OSM and the cooperators would need to make several decisions on whether to approve various aspects of the Black Mesa and Kayenta Mines life-of-mine revision, the Coal Slurry Preparation Plant, the Coal Slurry Pipeline, and the C-aquifer Water Supply System. OSM has approval authority for the permit revision application for the Kayenta and Black Mesa Mines and the permit application for the Coal Slurry Preparation Plant. BLM has approval authority for the mining plan for the Kayenta and Black Mesa Mines. BIA, Navajo Nation, and Hopi Tribe would have various realty actions to undertake such as granting of rights-of-way, as well as approval authorities and responsibilities for several other components of the project, such as C-aquifer water usage. BLM, USFS, Mohave County, and City of Kingman also would have realty actions to undertake such as granting of rights-of-way. USEPA has a number of responsibilities under the Clean Water Act including section 401 certification authority, which is a prerequisite to section 404 permit authorization. Under section 402, USEPA issues and enforces National Pollutant Discharge Elimination System (NPDES) permits. USEPA also is responsible for implementing the Clean Air Act requirements on the Hopi reservation and for implementing most Clean Air Act requirements on the Navajo reservation. USEPA recently delegated to the Navajo Environmental Protection Agency the Clean Air Act Part 71 Operating Permit Program for sources located on Navajo land. Some aspects of the proposed projects will require a Department of the Army permit from the U.S. Army Corps of Engineers under section 404 of the Clean Water Act and section 10 of the River and Harbor Act of 1899.

The EIS would evaluate the environmental effects of the proposed project and a variety of alternatives. Alternatives that may be evaluated include alternative alignments for the Coal Slurry Pipeline and the C-aquifer water supply pipeline, amounts of water to be withdrawn from the C-aquifer for tribal municipal and industrial uses as well as mine related and coal slurry uses, and a variety of approval and disapproval options related to the various components of the project. Other alternatives may be evaluated based on the comments received during the scoping comment period.

IV. Public Comment Procedures

In accordance with the Council on Environmental Quality's regulations for implementing NEPA, 40 CFR parts 1500 through 1508, OSM solicits public comments on the scope of the EIS and significant issues that it should address in the EIS.

Written comments, including email comments, should be sent to OSM at the addresses given in the **ADDRESSES** section of this notice. Comments should be specific and pertain only to the issues relating to the proposals. OSM will include all comments in the administrative record.

If you would like to be placed on the mailing list to receive future information, please contact the person listed in the section, **FOR FURTHER INFORMATION CONTACT**, above.

Availability of Comments

OSM will make comments, including names and addresses of respondents, available for public review during normal business hours. OSM will not consider anonymous comments. If individual respondents request confidentiality, OSM will honor their

requests to the extent allowable by law. Individual respondents who wish to withhold their name or address (except for the city or town) from public review must state this prominently at the beginning of their comments and must submit their comments by regular mail. All submissions from organizations or businesses and from individuals identifying themselves as representatives or officials of organizations or businesses will be available for public review in their entirety.

Scoping Meetings

If you wish to speak at a scoping meeting, you should sign up to speak when you arrive at the meeting. OSM will call upon persons to speak in the order of the sign-in. If you are in the audience and have not signed up to speak, you will be allowed to speak after those who have signed up. For persons who wish not to speak, OSM also will accept written comments at the meeting.

A transcriber will be present at the meetings to record comments. To assist the transcriber and ensure an accurate record, OSM requests that each speaker provide a written copy of his or her comments, if possible. OSM will end the meeting after everyone who wishes to speak has been heard. If a large number of people wish to speak at a meeting, OSM may limit the length of time each person has to speak in order to give everyone an opportunity to speak.

Hopi and Navajo interpreters will be present at meetings on the Hopi and Navajo Reservations.

If you are disabled or need special accommodations to attend one of the meetings, contact the person under **FOR FURTHER INFORMATION CONTACT** at least one week before the meeting.

Dated: November 17, 2004.

Allen D. Klein,

Regional Director, Western Regional Coordinating Center.

[FR Doc. 04–26439 Filed 11–30–04; 8:45 am]

BILLING CODE 4310–05–P

INTERNATIONAL TRADE COMMISSION

[Inv. No. 337–TA–508]

Certain Absorbent Garments; Notice of a Commission Determination Not To Review an Initial Determination Terminating the Investigation With Respect to all Respondents on the Basis of a Consent Order; Issuance of Consent Order; Termination of Investigation

AGENCY: U.S. International Trade Commission.

ACTION: Notice.

SUMMARY: Notice is hereby given that the U.S. International Trade Commission has determined not to review an initial determination (''ID'') of the presiding administrative law judge (''ALJ'') granting the joint motion of the complainants and four respondents, Grupo ABS Internacional, S.A. de C.V., Absormex S.A. de C.V., and ABS Bienes de Capital S.A. de C.V. all of Mexico, and Absormex USA, Inc., of Laredo, Texas, to terminate the above-captioned investigation with respect to those respondents on the basis of a consent order. The investigation is terminated in its entirety.

FOR FURTHER INFORMATION CONTACT: Michael K. Haldenstein, Esq., telephone 202–205–3041, Office of the General Counsel, U.S. International Trade Commission, 500 E Street, SW., Washington, DC 20436. Copies of all nonconfidential documents filed in connection with this investigation are or will be available for inspection during official business hours (8:45 a.m. to 5:15 p.m.) in the Office of the Secretary, U.S. International Trade Commission, 500 E Street SW., Washington, DC 20436, telephone 202–205–2000. General information concerning the Commission may also be obtained by accessing its Internet server (*http://www.usitc.gov*). The public record for this investigation may be viewed on the Commission's electronic docket (EDIS–ON–LINE) at *http://edis.usitc.gov*. Hearing-impaired persons are advised that information on the matter can be obtained by contacting the Commission's TDD terminal on 202–205–1810.

SUPPLEMENTARY INFORMATION: The Commission instituted this investigation on May 2, 2004, based on a complaint filed by Tyco Healthcare Retail Group, Inc. and Paragon Trade Brands, Inc. A supplement to the complaint was filed on April 26, 2004. The complaint, as supplemented, alleges violations of section 337 in the importation into the United States, the sale for importation, and the sale within the United States after importation of certain absorbent garments by reason of infringement of claims 1, 9, 12–13 of U.S. Patent No. 5,275,590, claims 1–2 of U.S. Patent No. 5,403,301, and claims 8–9 of U.S. Patent No. 4,892,528. The complaint further alleges that there exists an industry in the United States as required by subsection (a)(2) of section 337. The complaint named three respondents: Grupo ABS Internacional, S.A. de C.V. and Absormex S.A. de C.V. of Mexico, and Absormex USA, Inc. of Laredo Texas. ABS Bienes de Capital S.A. de C.V. was added as a respondent on July 15, 2004.

On October 12, 2004, the two complainants and the four respondents filed a joint motion to terminate the investigation as to all four respondents. The joint motion was based on a proposed consent order, filed pursuant to a consent order stipulation and Memorandum of Understanding (MOU) between the parties. The Commission Investigative Attorney (''IA'') filed a response in support of the motion on October 22, 2004. The ALJ denied the joint motion on October 27, 2004 because it appeared to him that the parties may have intended to have the Commission enforce the MOU. The parties then moved for reconsideration of the denial of the joint motion on October 29, 2004.

The ALJ issued the subject ID on November 2, 2004, granting the motion for reconsideration and terminating the investigation as to all four respondents on the basis of a consent order. The ALJ indicates in the ID that he is satisfied that the parties made clear in their motion for reconsideration that they do not intend for the Commission to enforce the MOU. The ID also indicates that the consent order stipulation satisfies the provisions of Commission rule 210.21(c)(3)(i). No petitions for review of the subject ID were filed.

This action is taken under the authority of section 337 of the Tariff Act of 1930, as amended, 19 U.S.C. 1337, and Commission rule 210.42, 19 CFR 210.42.

Issued: November 24, 2004.

By order of the Commission.

Marilyn R. Abbott,

Secretary to the Commission.

[FR Doc. 04–26485 Filed 11–30–04; 8:45 am]

BILLING CODE 7020–02–P

INTERNATIONAL TRADE COMMISSION

[Investigations Nos. 731–TA–308–310, 520, and 521 (Second Review)]

Carbon Steel Butt-Weld Pipe Fittings From Brazil, China, Japan, Taiwan, and Thailand

AGENCY: United States International Trade Commission.

ACTION: Institution of five-year reviews concerning the antidumping duty orders on carbon steel butt-weld pipe fittings from Brazil, China, Japan, Taiwan, and Thailand.

SUMMARY: The Commission hereby gives notice that it has instituted reviews pursuant to section 751(c) of the Tariff Act of 1930 (19 U.S.C. 1675(c)) (the Act) to determine whether revocation of the antidumping duty orders on carbon steel butt-weld pipe fittings from Brazil, China, Japan, Taiwan, and Thailand would be likely to lead to continuation or recurrence of material injury. Pursuant to section 751(c)(2) of the Act, interested parties are requested to respond to this notice by submitting the information specified below to the Commission;[1] to be assured of consideration, the deadline for responses is January 21, 2005. Comments on the adequacy of responses may be filed with the Commission by February 14, 2005. For further information concerning the conduct of these reviews and rules of general application, consult the Commission's Rules of Practice and Procedure, part 201, subparts A through E (19 CFR part 201), and part 207, subparts A, D, E, and F (19 CFR part 207).

EFFECTIVE DATE: December 1, 2004.

FOR FURTHER INFORMATION CONTACT: Mary Messer (202–205–3193), Office of Investigations, U.S. International Trade Commission, 500 E Street SW., Washington, DC 20436. Hearing-impaired persons can obtain information on this matter by contacting the Commission's TDD terminal on 202–205–1810. Persons with mobility impairments who will need special assistance in gaining access to the Commission should contact the Office of the Secretary at 202–205–2000. General information concerning the Commission may also be obtained by accessing its internet server (*http://www.usitc.gov*). The public record for these reviews may be viewed on the Commission's electronic docket (EDIS) at *http://edis.usitc.gov*.

SUPPLEMENTARY INFORMATION:

Background. On the dates listed below, the Department of Commerce issued antidumping duty orders on the subject imports:

Order date	Product/country	Investigation no.	FR cite
12/17/86	Carbon steel butt-weld pipe fittings/Brazil	731–TA–308	51 FR 45152
12/17/86	Carbon steel butt-weld pipe fittings/Taiwan	731–TA–310	51 FR 45152
2/10/87	Carbon steel butt-weld pipe fittings/Japan	731–TA–309	52 FR 4167
7/6/92	Carbon steel butt-weld pipe fittings/China	731–TA–520	57 FR 29702
7/6/92	Carbon steel butt-weld pipe fittings/Thailand	731–TA–521	57 FR 29702

Following five-year reviews by Commerce and the Commission, effective January 6, 2000, Commerce issued a continuation of the antidumping duty orders on imports of carbon steel butt-weld pipe fittings from Brazil, China, Japan, Taiwan, and Thailand (65 FR 753). The Commission is now conducting second reviews to determine whether revocation of the orders would be likely to lead to continuation or recurrence of material injury to the domestic industry within a reasonably foreseeable time. It will assess the adequacy of interested party responses to this notice of institution to determine whether to conduct full reviews or expedited reviews. The Commission's determinations in any expedited reviews will be based on the facts available, which may include information provided in response to this notice.

Definitions. The following definitions apply to these reviews:

(1) *Subject Merchandise* is the class or kind of merchandise that is within the scope of the five-year reviews, as defined by the Department of Commerce.

(2) The *Subject Countries* in these reviews are Brazil, China, Japan, Taiwan, and Thailand.

(3) The *Domestic Like Product* is the domestically produced product or products which are like, or in the absence of like, most similar in characteristics and uses with, the Subject Merchandise. In its original and expedited five-year review determinations, the Commission defined the Domestic Like Product as carbon steel butt-weld pipe fittings having an inside diameter of less than 14 inches, whether finished or unfinished.

(4) The *Domestic Industry* is the U.S. producers as a whole of the Domestic Like Product, or those producers whose collective output of the Domestic Like Product constitutes a major proportion of the total domestic production of the product. In its original and expedited five-year review determinations, the Commission defined a single Domestic Industry: producers of finished and unfinished carbon steel butt-weld pipe fittings having an inside diameter of less than 14 inches, including integrated producers, converters, and combination producers which perform both integrated production and conversion. One Commissioner defined the Domestic Industry differently in the original determinations concerning Brazil, Japan, and Taiwan. In the original determinations concerning China and Thailand, the Commission excluded two domestic producers, Tube Line and Weldbend, from the Domestic Industry under the related parties provision. In its expedited five-year review determinations, the Commission once again excluded Tube Line from the Domestic Industry under the related parties provision but found that Weldbend was no longer a related party eligible for exclusion. Certain Commissioners did not exclude Tube Line from the Domestic Industry in the expedited five-year review. For purposes of this notice, you should report information separately on each of the following two Domestic Industries: (1) the Domestic Industry including Tube Line and (2) the Domestic Industry excluding Tube Line.

(5) An *Importer* is any person or firm engaged, either directly or through a parent company or subsidiary, in importing the Subject Merchandise into the United States from a foreign

[1] No response to this request for information is required if a currently valid Office of Management and Budget (OMB) number is not displayed; the OMB number is 3117–0016/USITC No. 04–5–102, expiration date June 30, 2005. Public reporting burden for the request is estimated to average 7 hours per response. Please send comments regarding the accuracy of this burden estimate to the Office of Investigations, U.S. International Trade Commission, 500 E Street, SW., Washington, DC 20436.

manufacturer or through its selling agent.

Participation in the reviews and public service list. Persons, including industrial users of the Subject Merchandise and, if the merchandise is sold at the retail level, representative consumer organizations, wishing to participate in the reviews as parties must file an entry of appearance with the Secretary to the Commission, as provided in section 201.11(b)(4) of the Commission's rules, no later than 21 days after publication of this notice in the **Federal Register**. The Secretary will maintain a public service list containing the names and addresses of all persons, or their representatives, who are parties to the reviews.

Former Commission employees who are seeking to appear in Commission five-year reviews are reminded that they are required, pursuant to 19 CFR 201.15, to seek Commission approval if the matter in which they are seeking to appear was pending in any manner or form during their Commission employment. The Commission is seeking guidance as to whether a second transition five-year review is the ''same particular matter'' as the underlying original investigation for purposes of 19 CFR 201.15 and 18 U.S.C. 207, the post employment statute for Federal employees. Former employees may seek informal advice from Commission ethics officials with respect to this and the related issue of whether the employee's participation was ''personal and substantial.'' However, any informal consultation will not relieve former employees of the obligation to seek approval to appear from the Commission under its rule 201.15. For ethics advice, contact Carol McCue Verratti, Deputy Agency Ethics Official, at 202–205–3088.

Limited disclosure of business proprietary information (BPI) under an administrative protective order (APO) and APO service list. Pursuant to section 207.7(a) of the Commission's rules, the Secretary will make BPI submitted in these reviews available to authorized applicants under the APO issued in the reviews, provided that the application is made no later than 21 days after publication of this notice in the **Federal Register**. Authorized applicants must represent interested parties, as defined in 19 U.S.C. 1677(9), who are parties to the reviews. A separate service list will be maintained by the Secretary for those parties authorized to receive BPI under the APO.

Certification. Pursuant to section 207.3 of the Commission's rules, any person submitting information to the Commission in connection with these reviews must certify that the information is accurate and complete to the best of the submitter's knowledge. In making the certification, the submitter will be deemed to consent, unless otherwise specified, for the Commission, its employees, and contract personnel to use the information provided in any other reviews or investigations of the same or comparable products which the Commission conducts under Title VII of the Act, or in internal audits and investigations relating to the programs and operations of the Commission pursuant to 5 U.S.C. Appendix 3.

Written submissions. Pursuant to section 207.61 of the Commission's rules, each interested party response to this notice must provide the information specified below. The deadline for filing such responses is January 21, 2005. Pursuant to section 207.62(b) of the Commission's rules, eligible parties (as specified in Commission rule 207.62(b)(1)) may also file comments concerning the adequacy of responses to the notice of institution and whether the Commission should conduct expedited or full reviews. The deadline for filing such comments is February 14, 2005. All written submissions must conform with the provisions of sections 201.8 and 207.3 of the Commission's rules and any submissions that contain BPI must also conform with the requirements of sections 201.6 and 207.7 of the Commission's rules. The Commission's rules do not authorize filing of submissions with the Secretary by facsimile or electronic means, except to the extent permitted by section 201.8 of the Commission's rules, as amended, 67 Fed. Reg. 68036 (November 8, 2002). Also, in accordance with sections 201.16(c) and 207.3 of the Commission's rules, each document filed by a party to the reviews must be served on all other parties to the reviews (as identified by either the public or APO service list as appropriate), and a certificate of service must accompany the document (if you are not a party to the reviews you do not need to serve your response).

Inability to provide requested information. Pursuant to section 207.61(c) of the Commission's rules, any interested party that cannot furnish the information requested by this notice in the requested form and manner shall notify the Commission at the earliest possible time, provide a full explanation of why it cannot provide the requested information, and indicate alternative forms in which it can provide equivalent information. If an interested party does not provide this notification (or the Commission finds the explanation provided in the notification inadequate) and fails to provide a complete response to this notice, the Commission may take an adverse inference against the party pursuant to section 776(b) of the Act in making its determinations in the reviews.

Information To Be Provided in Response To This Notice of Institution: If you are a domestic producer, union/worker group, or trade/business association; import/export Subject Merchandise from more than one Subject Country; or produce Subject Merchandise in more than one Subject Country, you may file a single response. If you do so, please ensure that your response to each question includes the information requested for each pertinent Subject Country. As used below, the term ''firm'' includes any related firms.

(1) The name and address of your firm or entity (including World Wide Web address if available) and name, telephone number, fax number, and E-mail address of the certifying official.

(2) A statement indicating whether your firm/entity is a U.S. producer of the Domestic Like Product, a U.S. union or worker group, a U.S. importer of the Subject Merchandise, a foreign producer or exporter of the Subject Merchandise, a U.S. or foreign trade or business association, or another interested party (including an explanation). If you are a union/worker group or trade/business association, identify the firms in which your workers are employed or which are members of your association.

(3) A statement indicating whether your firm/entity is willing to participate in these reviews by providing information requested by the Commission.

(4) A statement of the likely effects of the revocation of the antidumping duty orders on the Domestic Industry in general and/or your firm/entity specifically. In your response, please discuss the various factors specified in section 752(a) of the Act (19 U.S.C. 1675a(a)) including the likely volume of subject imports, likely price effects of subject imports, and likely impact of imports of Subject Merchandise on the Domestic Industry.

(5) A list of all known and currently operating U.S. producers of the Domestic Like Product. Identify any known related parties and the nature of the relationship as defined in section 771(4)(B) of the Act (19 U.S.C. 1677(4)(B)).

(6) A list of all known and currently operating U.S. importers of the Subject Merchandise and producers of the Subject Merchandise in each Subject Country that currently export or have exported Subject Merchandise to the

United States or other countries after 1998.

(7) If you are a U.S. producer of the Domestic Like Product, provide the following information on your firm's operations on that product during calendar year 2003 (report quantity data in pounds and value data in U.S. dollars, f.o.b. plant). If you are a union/worker group or trade/business association, provide the information, on an aggregate basis, for the firms in which your workers are employed/which are members of your association.

(a) Production (quantity) and, if known, an estimate of the percentage of total U.S. production of the Domestic Like Product accounted for by your firm's(s') production;

(b) the quantity and value of U.S. commercial shipments of the Domestic Like Product produced in your U.S. plant(s); and

(c) the quantity and value of U.S. internal consumption/company transfers of the Domestic Like Product produced in your U.S. plant(s).

(8) If you are a U.S. importer or a trade/business association of U.S. importers of the Subject Merchandise from the Subject Countries, provide the following information on your firm's(s') operations on that product during calendar year 2003 (report quantity data in pounds and value data in U.S. dollars). If you are a trade/business association, provide the information, on an aggregate basis, for the firms which are members of your association.

(a) The quantity and value (landed, duty-paid but not including antidumping or countervailing duties) of U.S. imports and, if known, an estimate of the percentage of total U.S. imports of Subject Merchandise from each Subject Country accounted for by your firm's(s') imports;

(b) the quantity and value (f.o.b. U.S. port, including antidumping and/or countervailing duties) of U.S. commercial shipments of Subject Merchandise imported from each Subject Country; and

(c) the quantity and value (f.o.b. U.S. port, including antidumping and/or countervailing duties) of U.S. internal consumption/company transfers of Subject Merchandise imported from each Subject Country.

(9) If you are a producer, an exporter, or a trade/business association of producers or exporters of the Subject Merchandise in the Subject Countries, provide the following information on your firm's(s') operations on that product during calendar year 2003 (report quantity data in pounds and value data in U.S. dollars, landed and duty-paid at the U.S. port but not including antidumping or countervailing duties). If you are a trade/business association, provide the information, on an aggregate basis, for the firms which are members of your association.

(a) Production (quantity) and, if known, an estimate of the percentage of total production of Subject Merchandise in each Subject Country accounted for by your firm's(s') production; and

(b) the quantity and value of your firm's(s') exports to the United States of Subject Merchandise and, if known, an estimate of the percentage of total exports to the United States of Subject Merchandise from each Subject Country accounted for by your firm's(s') exports.

(10) Identify significant changes, if any, in the supply and demand conditions or business cycle for the Domestic Like Product that have occurred in the United States or in the market for the Subject Merchandise in the Subject Countries after 1998, and significant changes, if any, that are likely to occur within a reasonably foreseeable time. Supply conditions to consider include technology; production methods; development efforts; ability to increase production (including the shift of production facilities used for other products and the use, cost, or availability of major inputs into production); and factors related to the ability to shift supply among different national markets (including barriers to importation in foreign markets or changes in market demand abroad). Demand conditions to consider include end uses and applications; the existence and availability of substitute products; and the level of competition among the Domestic Like Product produced in the United States, Subject Merchandise produced in the Subject Countries, and such merchandise from other countries.

(11) (*Optional*) A statement of whether you agree with the above definitions of the Domestic Like Product and Domestic Industry; if you disagree with either or both of these definitions, please explain why and provide alternative definitions.

Authority: These reviews are being conducted under authority of title VII of the Tariff Act of 1930; this notice is published pursuant to section 207.61 of the Commission's rules.

Issued: November 22, 2004.

By order of the Commission.

Marilyn R. Abbott,

Secretary to the Commission.

[FR Doc. 04–26482 Filed 11–30–04; 8:45 am]

BILLING CODE 7020–02–P

INTERNATIONAL TRADE COMMISSION

[Investigations Nos. 731–TA–385 and 386 (Second Review)]

Granular Polytetrafluoroethylene Resin From Italy and Japan

AGENCY: United States International Trade Commission.

ACTION: Institution of five-year reviews concerning the antidumping duty orders on granular polytetrafluoroethylene resin from Italy and Japan.

SUMMARY: The Commission hereby gives notice that it has instituted reviews pursuant to section 751(c) of the Tariff Act of 1930 (19 U.S.C. 1675(c)) (the Act) to determine whether revocation of the antidumping duty orders on granular polytetrafluoroethylene resin from Italy and Japan would be likely to lead to continuation or recurrence of material injury. Pursuant to section 751(c)(2) of the Act, interested parties are requested to respond to this notice by submitting the information specified below to the Commission;[1] to be assured of consideration, the deadline for responses is January 21, 2005. Comments on the adequacy of responses may be filed with the Commission by February 14, 2005. For further information concerning the conduct of these reviews and rules of general application, consult the Commission's Rules of Practice and Procedure, part 201, subparts A through E (19 CFR part 201), and part 207, subparts A, D, E, and F (19 CFR part 207).

DATES: *Effective Date:* December 1, 2004.

FOR FURTHER INFORMATION CONTACT: Mary Messer (202–205–3193), Office of Investigations, U.S. International Trade Commission, 500 E Street SW., Washington, DC 20436. Hearing-impaired persons can obtain information on this matter by contacting the Commission's TDD terminal on 202–205–1810. Persons with mobility impairments who will need special assistance in gaining access to the Commission should contact the Office of the Secretary at 202–205–2000. General information concerning the Commission may also be obtained by accessing its Internet server (*http://*

[1] No response to this request for information is required if a currently valid Office of Management and Budget (OMB) number is not displayed; the OMB number is 3117–0016/USITC No. 04–5–103, expiration date June 30, 2005. Public reporting burden for the request is estimated to average 7 hours per response. Please send comments regarding the accuracy of this burden estimate to the Office of Investigations, U.S. International Trade Commission, 500 E Street, SW., Washington, DC 20436.

www.usitc.gov). The public record for these reviews may be viewed on the Commission's electronic docket (EDIS) at *http://edis.usitc.gov*.

SUPPLEMENTARY INFORMATION:

Background.—On August 24, 1988, the Department of Commerce (''Commerce'') issued an antidumping duty order on imports of granular polytetrafluoroethylene resin from Japan (53 FR 32267). On August 30, 1988, Commerce issued an antidumping duty order on imports of granular polytetrafluoroethylene resin from Italy (53 FR 33163). Following five-year reviews by Commerce and the Commission, effective January 3, 2000, Commerce issued a continuation of the antidumping duty order on imports of granular polytetrafluoroethylene resin from Italy and Japan (65 FR 6147, February 8, 2000). The Commission is now conducting a second review to determine whether revocation of the order would be likely to lead to continuation or recurrence of material injury to the domestic industry within a reasonably foreseeable time. It will assess the adequacy of interested party responses to this notice of institution to determine whether to conduct full reviews or expedited reviews. The Commission's determinations in any expedited reviews will be based on the facts available, which may include information provided in response to this notice.

Definitions.—The following definitions apply to these reviews:

(1) *Subject Merchandise* is the class or kind of merchandise that is within the scope of the five-year reviews, as defined by Commerce.

(2) The *Subject Countries* in these reviews are Italy and Japan.

(3) The *Domestic Like Product* is the domestically produced product or products which are like, or in the absence of like, most similar in characteristics and uses with, the Subject Merchandise. In its original determinations, the Commission defined the Domestic Like Product as granular polytetrafluoroethylene resin. In its expedited five-year review determinations, the Commission defined the Domestic Like Product as granular polytetrafluoroethylene resin, coextensive with Commerce's scope.

(4) The *Domestic Industry* is the U.S. producers as a whole of the Domestic Like Product, or those producers whose collective output of the Domestic Like Product constitutes a major proportion of the total domestic production of the product. In its original and expedited five-year review determinations, the Commission defined the Domestic Industry as U.S. producers of granular polytetrafluoroethylene resin, both unfilled and filled.

(5) An *Importer* is any person or firm engaged, either directly or through a parent company or subsidiary, in importing the Subject Merchandise into the United States from a foreign manufacturer or through its selling agent.

Participation in the reviews and public service list.—Persons, including industrial users of the Subject Merchandise and, if the merchandise is sold at the retail level, representative consumer organizations, wishing to participate in the reviews as parties must file an entry of appearance with the Secretary to the Commission, as provided in section 201.11(b)(4) of the Commission's rules, no later than 21 days after publication of this notice in the **Federal Register**. The Secretary will maintain a public service list containing the names and addresses of all persons, or their representatives, who are parties to the reviews.

Former Commission employees who are seeking to appear in Commission five-year reviews are reminded that they are required, pursuant to 19 CFR 201.15, to seek Commission approval if the matter in which they are seeking to appear was pending in any manner or form during their Commission employment. The Commission is seeking guidance as to whether a second transition five-year review is the ''same particular matter'' as the underlying original investigation for purposes of 19 CFR 201.15 and 18 U.S.C. 207, the post employment statute for Federal employees. Former employees may seek informal advice from Commission ethics officials with respect to this and the related issue of whether the employee's participation was ''personal and substantial.'' However, any informal consultation will not relieve former employees of the obligation to seek approval to appear from the Commission under its rule 201.15. For ethics advice, contact Carol McCue Verratti, Deputy Agency Ethics Official, at 202–205–3088.

Limited disclosure of business proprietary information (BPI) under an administrative protective order (APO) and APO service list.—Pursuant to section 207.7(a) of the Commission's rules, the Secretary will make BPI submitted in these reviews available to authorized applicants under the APO issued in the reviews, provided that the application is made no later than 21 days after publication of this notice in the **Federal Register**. Authorized applicants must represent interested parties, as defined in 19 U.S.C. 1677(9), who are parties to the reviews. A separate service list will be maintained by the Secretary for those parties authorized to receive BPI under the APO.

Certification.—Pursuant to section 207.3 of the Commission's rules, any person submitting information to the Commission in connection with these reviews must certify that the information is accurate and complete to the best of the submitter's knowledge. In making the certification, the submitter will be deemed to consent, unless otherwise specified, for the Commission, its employees, and contract personnel to use the information provided in any other reviews or investigations of the same or comparable products which the Commission conducts under Title VII of the Act, or in internal audits and investigations relating to the programs and operations of the Commission pursuant to 5 U.S.C. Appendix 3.

Written submissions.—Pursuant to section 207.61 of the Commission's rules, each interested party response to this notice must provide the information specified below. The deadline for filing such responses is January 21, 2005. Pursuant to section 207.62(b) of the Commission's rules, eligible parties (as specified in Commission rule 207.62(b)(1)) may also file comments concerning the adequacy of responses to the notice of institution and whether the Commission should conduct expedited or full reviews. The deadline for filing such comments is February 14, 2005. All written submissions must conform with the provisions of sections 201.8 and 207.3 of the Commission's rules and any submissions that contain BPI must also conform with the requirements of sections 201.6 and 207.7 of the Commission's rules. The Commission's rules do not authorize filing of submissions with the Secretary by facsimile or electronic means, except to the extent permitted by section 201.8 of the Commission's rules, as amended, 67 Fed. Reg. 68036 (November 8, 2002). Also, in accordance with sections 201.16(c) and 207.3 of the Commission's rules, each document filed by a party to the reviews must be served on all other parties to the reviews (as identified by either the public or APO service list as appropriate), and a certificate of service must accompany the document (if you are not a party to the reviews you do not need to serve your response).

Inability to provide requested information.—Pursuant to section 207.61(c) of the Commission's rules, any interested party that cannot furnish the information requested by this notice in the requested form and manner shall

notify the Commission at the earliest possible time, provide a full explanation of why it cannot provide the requested information, and indicate alternative forms in which it can provide equivalent information. If an interested party does not provide this notification (or the Commission finds the explanation provided in the notification inadequate) and fails to provide a complete response to this notice, the Commission may take an adverse inference against the party pursuant to section 776(b) of the Act in making its determinations in the reviews.

Information To Be Provided in Response To This Notice of Institution: If you are a domestic producer, union/worker group, or trade/business association; import/export Subject Merchandise from more than one Subject Country; or produce Subject Merchandise in more than one Subject Country, you may file a single response. If you do so, please ensure that your response to each question includes the information requested for each pertinent Subject Country. As used below, the term ''firm'' includes any related firms.

(1) The name and address of your firm or entity (including World Wide Web address if available) and name, telephone number, fax number, and E-mail address of the certifying official.

(2) A statement indicating whether your firm/entity is a U.S. producer of the Domestic Like Product, a U.S. union or worker group, a U.S. importer of the Subject Merchandise, a foreign producer or exporter of the Subject Merchandise, a U.S. or foreign trade or business association, or another interested party (including an explanation). If you are a union/worker group or trade/business association, identify the firms in which your workers are employed or which are members of your association.

(3) A statement indicating whether your firm/entity is willing to participate in these reviews by providing information requested by the Commission.

(4) A statement of the likely effects of the revocation of the antidumping duty orders on the Domestic Industry in general and/or your firm/entity specifically. In your response, please discuss the various factors specified in section 752(a) of the Act (19 U.S.C. 1675a(a)) including the likely volume of subject imports, likely price effects of subject imports, and likely impact of imports of Subject Merchandise on the Domestic Industry.

(5) A list of all known and currently operating U.S. producers of the Domestic Like Product. Identify any known related parties and the nature of the relationship as defined in section 771(4)(B) of the Act (19 U.S.C. 1677(4)(B)).

(6) A list of all known and currently operating U.S. importers of the Subject Merchandise and producers of the Subject Merchandise in each Subject Country that currently export or have exported Subject Merchandise to the United States or other countries after 1998.

(7) If you are a U.S. producer of the Domestic Like Product, provide the following information on your firm's operations on that product during calendar year 2003 (report quantity data in pounds and value data in U.S. dollars, f.o.b. plant). If you are a union/worker group or trade/business association, provide the information, on an aggregate basis, for the firms in which your workers are employed/which are members of your association.

(a) Production (quantity) and, if known, an estimate of the percentage of total U.S. production of the Domestic Like Product accounted for by your firm's(s') production;

(b) the quantity and value of U.S. commercial shipments of the Domestic Like Product produced in your U.S. plant(s); and

(c) the quantity and value of U.S. internal consumption/company transfers of the Domestic Like Product produced in your U.S. plant(s).

(8) If you are a U.S. importer or a trade/business association of U.S. importers of the Subject Merchandise from the Subject Countries, provide the following information on your firm's(s') operations on that product during calendar year 2003 (report quantity data in pounds and value data in U.S. dollars). If you are a trade/business association, provide the information, on an aggregate basis, for the firms which are members of your association.

(a) The quantity and value (landed, duty-paid but not including antidumping or countervailing duties) of U.S. imports and, if known, an estimate of the percentage of total U.S. imports of Subject Merchandise from each Subject Country accounted for by your firm's(s') imports;

(b) the quantity and value (f.o.b. U.S. port, including antidumping and/or countervailing duties) of U.S. commercial shipments of Subject Merchandise imported from each Subject Country; and

(c) the quantity and value (f.o.b. U.S. port, including antidumping and/or countervailing duties) of U.S. internal consumption/company transfers of Subject Merchandise imported from each Subject Country.

(9) If you are a producer, an exporter, or a trade/business association of producers or exporters of the Subject Merchandise in the Subject Countries, provide the following information on your firm's(s') operations on that product during calendar year 2003 (report quantity data in pounds and value data in U.S. dollars, landed and duty-paid at the U.S. port but not including antidumping or countervailing duties). If you are a trade/business association, provide the information, on an aggregate basis, for the firms which are members of your association.

(a) Production (quantity) and, if known, an estimate of the percentage of total production of Subject Merchandise in each Subject Country accounted for by your firm's(s') production; and

(b) the quantity and value of your firm's(s') exports to the United States of Subject Merchandise and, if known, an estimate of the percentage of total exports to the United States of Subject Merchandise from each Subject Country accounted for by your firm's(s') exports.

(10) Identify significant changes, if any, in the supply and demand conditions or business cycle for the Domestic Like Product that have occurred in the United States or in the market for the Subject Merchandise in each Subject Country after 1998, and significant changes, if any, that are likely to occur within a reasonably foreseeable time. Supply conditions to consider include technology; production methods; development efforts; ability to increase production (including the shift of production facilities used for other products and the use, cost, or availability of major inputs into production); and factors related to the ability to shift supply among different national markets (including barriers to importation in foreign markets or changes in market demand abroad). Demand conditions to consider include end uses and applications; the existence and availability of substitute products; and the level of competition among the Domestic Like Product produced in the United States, Subject Merchandise produced in the Subject Countries, and such merchandise from other countries.

(11) (*Optional*) a statement of whether you agree with the above definitions of the Domestic Like Product and Domestic Industry; if you disagree with either or both of these definitions, please explain why and provide alternative definitions.

Authority: These reviews are being conducted under authority of title VII of the Tariff Act of 1930; this notice is published pursuant to section 207.61 of the Commission's rules.

Issued: November 22, 2004.

By order of the Commission.

Marilyn R. Abbott,

Secretary to the Commission.

[FR Doc. 04–26483 Filed 11–30–04; 8:45 am]

BILLING CODE 7020–02–P

INTERNATIONAL TRADE COMMISSION

[Investigation No. 731–TA–1059 (Final)]

Hand Trucks and Certain Parts Thereof From China

Determination

On the basis of the record [1] developed in the subject investigation, the United States International Trade Commission (Commission) determines, pursuant to section 735(b) of the Tariff Act of 1930 (19 U.S.C. 1673d(b)) (the Act), that an industry in the United States is threatened with material injury by reason of imports from China of hand trucks and certain parts thereof, provided for in subheadings 8716.80.50 and 8716.90.50 of the Harmonized Tariff Schedule of the United States, that have been found by the Department of Commerce (Commerce) to be sold in the United States at less than fair value (LTFV). The Commission further determines that it would not have found material injury but for the suspension of liquidation.

Background

The Commission instituted this investigation effective November 13, 2003, following receipt of a petition filed with the Commission and Commerce by Gleason Industrial Products, Inc., Los Angeles, CA. The final phase of the investigation was scheduled by the Commission following notification of a preliminary determination by Commerce that imports of hand trucks and certain parts thereof from China were being sold at LTFV within the meaning of section 733(b) of the Act (19 U.S.C. 1673b(b)). Notice of the scheduling of the final phase of the Commission's investigation and of a public hearing to be held in connection therewith was given by posting copies of the notice in the Office of the Secretary, U.S. International Trade Commission, Washington, DC, and by publishing the notice in the **Federal Register** of June 8, 2004 (69 FR 32042). The hearing was held in Washington, DC, on October 7, 2004, and all persons who requested the opportunity were permitted to appear in person or by counsel.

[1] The record is defined in sec. 207.2(f) of the Commission's Rules of Practice and Procedure (19 CFR 207.2(f)).

The Commission transmitted its determination in this investigation to the Secretary of Commerce on November 22, 2004. The views of the Commission are contained in USITC Publication 3737 (November 2004), entitled Hand Trucks and Certain Parts Thereof From China: Investigation No. 731–TA–1059 (Final).

Issued: November 24, 2004.

By order of the Commission.

Marilyn R. Abbott,

Secretary to the Commission.

[FR Doc. 04–26484 Filed 11–30–04; 8:45 am]

BILLING CODE 7020–02–P

DEPARTMENT OF JUSTICE

Notice of Lodging of Consent Decree Under the Clean Water Act, the Comprehensive Environmental Response, Compensation, and Liability Act, the Emergency Planning and Community Right-To-Know Act, and the Park System Resource Protection Act

Under the policy set out at 28 CFR 50.7, notice is hereby given that on November 15, 2004, the United States lodged with the United States District Court for the Northern District of Iowa a proposed consent decree (''Consent Decree'') in the case of *United States* v. *Iowa Turkey Products, Inc.*, Civ. A. No. C04–1045–LRR. The Consent Decree pertains to Iowa Turkey Products, Inc. (''ITP''), which owned a former turkey processing facility in Postville, Iowa. ITP discharged wastewater into a Publicly Owned Treatment Works (''POTW'') owned by the City of Postville (''City''). A related settlement with the City was lodged on October 15, 2004.

The Consent Decree would resolve claims in a Complaint filed, simultaneously with the lodging of the Consent Decree, by the United States against ITP for violations of Sections 301 and 307 of the Clean Water Act (''CWA''), 33 U.S.C. 1311 and 1317, and the Pretreatment Standards under the City's National Pollutant Discharge Elimination System Permit, pursuant to Section 402 of the CWA, 33 U.S.C. 1342. The Consent Decree would also resolve claims under Section 304 of the Emergency Planning and Community Right-to-Know Act (''EPCRA''), 42 U.S.C. 11004, and Section 103 of the Comprehensive Environmental Response, Compensation, and Recovery Act of 1980, as amended (''CERCLA''), 42 U.S.C. 9603, for failure to give notice of the release of anhydrous ammonia during a fire at the facility on December 20, 2003.

In addition, the Consent Decree would resolve claims by the United States for natural resource damages under Section 311 of the CWA, 33 U.S.C. 1321; Section 107 of CERCLA, 42 U.S.C. 9607; and the Park System Resource Protection Act, 16 U.S.C. 19jj, for unlawful discharges to the POTW that contributed to the release of hazardous substances during a March 2000 discharge event by the City. The March 2000 discharge event contributed to an aquatic life kill in the Yellow River.

The Consent Decree requires ITP to refrain from any future violations of the CWA, CERCLA, and EPCRA; to pay civil penalties for the CWA, EPCRA and CERCLA violations; and to pay natural resource damages, including compensatory restoration costs.

The Department of Justice will receive for a period of thirty (30) days from the date of this publication comments relating to the Consent Decree. Comments should be addressed to the Assistant Attorney General, Environmental and Natural Resources Division, P.O. Box 7611, U.S. Department of Justice, Washington, D.C. 20044–7611, and should refer to *United States* v. *Iowa Turkey Products,* DOJ Ref. No. 90–5–1–1–08078/1/.

The Consent Decree may be examined at the offices of the United States Attorney, Northern District of Iowa, 401 First Street, SE., Room 400, Cedar Rapids, IA 52401, and at the offices of U.S. EPA Region 7, 901 North 5th Street, Kansas City, Kansas 66101.

During the public comment period, the Consent Decree may also be examined on the following Department of Justice Web site, *http://www.usdoj.gov/enrd/open.html.* A copy of the Consent Decree may also be obtained by mail from the Consent Decree Library, P.O. Box 7611, U.S. Department of Justice, Washington, DC 20044–7611, or by faxing or e-mailing a request to Tonia Fleetwood (*tonia.fleetwood@usdoj.gov*), fax no. (202) 514–0097, phone confirmation number (202) 514–1547. In requesting a copy from the Consent Decree Library, please enclose a check in the amount of $6.75 (25 cents per page reproduction cost) payable to the U.S. Treasury.

Robert E. Maher, Jr.,

Assistant Chief, Environmental Enforcement Section, Environment and Natural Resources Division.

[FR Doc. 04–26509 Filed 11–30–04; 8:45 am]

BILLING CODE 4410–15–M

DEPARTMENT OF JUSTICE

Notice of Lodging of Consent Decree Between the United States of America and Wainwright Industries, Inc. Under the Comprehensive Environmental Response, Compensation and Liability Act (CERCLA)

Under 28 CFR 50.7, notice is hereby given that on November 18, 2004, a proposed Consent Decree (''Consent Decree'') in the case of *United States of America* v. *Wainwright Industries, Inc.*, Civil Action No. 02–CV–1548–SNL, was lodged with the United States District Court for the Eastern District of Missouri, Eastern Division.

The Consent Decree resolves the United States' claims under Section 107 of CERCLA, 42 U.S.C. 9607, against Wainwright Industries, Inc. for costs the Environmental Protection Agency incurred responding to contamination at the Valley Park TCE Site (''Site''), in St. Louis County. Under the Consent Decree, Wainwright Industries will pay $542,000 plus interest in two installments, plus future EPA oversight costs at its former property. The amount is based upon Wainwright Industries' certified inability to pay more. In exchange, Wainwright Industries will receive a covenant not to sue for past and future costs related to known contamination at the Site, and contribution protection, subject to standard reservations of rights. The covenant not to sue is conditioned upon Wainwright Industries' satisfactory completion of a cleanup at its former property, which is required by a prior consent decree with the State of Missouri.

The Department of Justice will receive comments relating to the Consent Decree for a period of thirty days from the date of this publication. Comments should be addressed to the Assistant Attorney General, Environment and Natural Resources Division, P.O. Box 7611, U.S. Department of Justice, Washington, DC 20044–7611, and should refer to *United States* v. *Wainwright Industries, Inc.*, D.J. Reference No. 90–11–3–07637.

The Consent Decree may be examined at the office of the United States Attorney, 111 South 10th Street, Room 20.333, St. Louis, MO 63102 and at U.S. EPA Region 7, 901 N. 5th Street, Kansas City, KS 66101. During the comment period, the Consent Decree may be examined on the following Department of Justice Web Site: *http://www.usdoj.gov/enrd/open.html.* A copy of the Consent Decree may also be obtained by mail from the Consent Decree Library, P.O. Box 7611, U.S. Department of Justice, Washington DC 20044–7611, or by faxing or e-mailing a request to Tonia Fleetwood (*tonia.fleetwood@usdoj.gov*), fax no. (202) 514–0097, phone confirmation number (202) 514–1547. In requesting a copy from the Consent Decree Library, please enclose a check in the amount of $5.75 (25 cents per page reproduction cost) payable to the United States Treasury for payment.

Dated: November 22, 2004.

Robert E. Maher, Jr.,

Assistant Section Chief, Environmental Enforcement Section, Environment and Natural Resources Division.

[FR Doc. 04–26510 Filed 11–30–04; 8:45 am]

BILLING CODE 4410–15–M

DEPARTMENT OF LABOR

Office of the Secretary

Submission for OMB Review: Comment Request

November 23, 2004.

The Department of Labor (DOL) has submitted the following public information collection requests (ICRs) to the Office of Management and Budget (OMB) for review and approval in accordance with the Paperwork Reduction Act of 1995 (Pub. L. 104–13, 44 U.S.C. chapter 35). A copy of each ICR, with applicable supporting documentation, may be obtained by contacting Darrin King on 202–693–4129 (this is not a toll-free number) or e-mail: *king.darrin@dol.gov*.

Comments should be sent to Office of Information and Regulatory Affairs, Attn: OMB Desk Officer for the Occupational Safety and Health Administration (OSHA), Office of Management and Budget, Room 10235, Washington, DC 20503, 202–395–7316 (this is not a toll-free number), within 30 days from the date of this publication in the **Federal Register**.

The OMB is particularly interested in comments which:

- Evaluate whether the proposed collection of information is necessary for the proper performance of the functions of the agency, including whether the information will have practical utility;
- Evaluate the accuracy of the agency's estimate of the burden of the proposed collection of information, including the validity of the methodology and assumptions used;
- Enhance the quality, utility, and clarity of the information to be collected; and
- Minimize the burden of the collection of information on those who are to respond, including through the use of appropriate automated, electronic, mechanical, or other technological collection techniques or other forms of information technology, *e.g.*, permitting electronic submission of responses.

Agency: Occupational Safety and Health Administration.

Type of Review: Extension of currently approved collection.

Title: Cranes and Derricks Standards for Construction: Recording Tests for Toxic Gases and Oxygen-Deficient Atmospheres in Enclosed Spaces.

OMB Number: 1218–0054.

Form Number: None.

Frequency: On occasion.

Type of Response: Recordkeeping and Third party disclosure.

Affected Public: Business or other for-profit; Not-for-profit institutions; Federal Government; and State, Local, or Tribal Government.

Number of Respondents: 50.

Number of Annual Responses: 2,950.

Estimated Time Per Response: 15 minutes.

Total Burden Hours: 728.

Total Annualized capital/startup costs: $0.

Total Annual Costs (operating/maintaining systems or purchasing services): $18,000.

Description: The Cranes and Derricks Standard for Construction [29 CFR 1926.550] addresses conditions in which a crane or derrick powered by an internal-combustion engine is exhausting in an enclosed space that employees occupy or will occupy. Under these conditions, employers must record tests made of the breathing air in the space to ensure that adequate oxygen is available and that concentrations of toxic gases are at safe levels. Establishing a test record allows employers to document oxygen levels and specific atmospheric contaminants, ascertain the effectiveness of controls, implement additional controls if necessary, and readily provide this information to other crews and shifts who may work in the enclosed space. Accordingly, employers will prevent serious injury and death to equipment operators and other employees who use or work near this equipment in an enclosed space.

Agency: Occupational Safety and Health Administration.

Type of Review: Extension of currently approved collection.

Title: Cranes and Derricks Standards for Construction; Notification of Operational Specifications and Hand Signals.

OMB Number: 1218–0115.

Form Number: None.
Frequency: On occasion.
Type of Response: Recordkeeping and Third party disclosure.
Affected Public: Business or other for-profit; Not-for-profit institutions; Federal Government; and State, Local, or Tribal Government.
Number of Respondents: 70,544.
Number of Annual Responses: 70,544.
Estimated Time Per Response: 5 minutes.
Total Burden Hours: 5,640.
Total Annualized capital/startup costs: $0.
Total Annual Costs (operating/maintaining systems or purchasing services): $477,802.
Description: The Cranes and Derricks Standard for Construction [29 CFR 1926.550] requires employers to provide notification of specified operating characteristics through documentation, posting, or revising maintenance-instruction plates, tags, or decals, and to notify employees of hand signals used to communicate with equipment operators by posting an illustration of applicable signals at the worksite. By operating the equipment safely and within specified parameters, and communicating effectively with equipment operators, employers will prevent serious injury and death to the equipment operators and other employees who use or work near the equipment.

Ira L. Mills,
Departmental Clearance Officer.
[FR Doc. 04–26449 Filed 11–30–04; 8:45 am]
BILLING CODE 4510–26–P

DEPARTMENT OF LABOR

Office of the Secretary

Submission for OMB Review: Comment Request

November 24, 2004.

The Department of Labor (DOL) has submitted the following public information collection request (ICR) to the Office of Management and Budget (OMB) for review and approval in accordance with the Paperwork Reduction Act of 1995 (Pub. L. 104–13, 44 U.S.C. chapter 35). A copy of this ICR, with applicable supporting documentation, may be obtained by contacting Darrin King on 202–693–4129 (this is not a toll-free number) or e-mail: *king.darrin@dol.gov*.

Comments should be sent to Office of Information and Regulatory Affairs, Attn: OMB Desk Officer for the Employee Benefits Security Administration (EBSA), Office of Management and Budget, Room 10235, Washington, DC 20503, 202–395–7316 (this is not a toll-free number), within 30 days from the date of this publication in the **Federal Register**.

The OMB is particularly interested in comments which:

- Evaluate whether the proposed collection of information is necessary for the proper performance of the functions of the agency, including whether the information will have practical utility;
- Evaluate the accuracy of the agency's estimate of the burden of the proposed collection of information, including the validity of the methodology and assumptions used;
- Enhance the quality, utility, and clarity of the information to be collected; and
- Minimize the burden of the collection of information on those who are to respond, including through the use of appropriate automated, electronic, mechanical, or other technological collection techniques or other forms of information technology, *e.g.*, permitting electronic submission of responses.

Agency: Employee Benefits Security Administration.
Type of Review: Extension of currently approved collection.
Title: Notice to Participants and Beneficiaries and the Federal Government to Electing One Percent Increased Cost Exemption.
OMB Number: 1210–0105.
Frequency: On occasion.
Type of Response: Reporting; Record keeping; and Third party disclosure.
Affected Public: Business or other for-profit; Not-for-profit institutions; and Individuals or households.
Number of Respondents: 10.
Number of Annual Responses: 10,000.
Estimated Time Per Response: 2 minutes.
Total Burden Hours: 333.
Total Annualized capital/startup costs: $0.
Total Annual Costs (operating/maintaining systems or purchasing services): $5,000.
Description: The Mental Health Parity Act of 1996 (Pub. L. 104–204) requires that group health plans provide parity in the application of dollar limits between mental health and medical/surgical benefits. The statute exempts plans from this requirement if its application results in an increase in the cost under the plan or coverage by at least one percent. The Interim Final Rules under 29 CFR 2590.712(f)(3)(i) and (ii) require a group health plan electing to take advantage of this exemption to provide a written notice to participants and beneficiaries and to the federal government of the plan's election. To satisfy the requirements to notify the federal government, a group health plan may either send the Department a copy of the summary of material reductions in covered services or benefits sent to participants and beneficiaries, or the plan may use the Department's model notice published in the Interim Final Rule which was developed for this purpose.

Ira L. Mills,
Departmental Clearance Officer.
[FR Doc. 04–26450 Filed 11–30–04; 8:45 am]
BILLING CODE 4510–29–P

DEPARTMENT OF LABOR

Mine Safety and Health Administration

Proposed Information Collection Request Submitted for Public Comment and Recommendations; Qualification/Certification Program and Man Hoist Operators Physical Fitness

ACTION: Notice.

SUMMARY: The Department of Labor, as part of its continuing effort to reduce paperwork and respondent burden, conducts a preclearance consultation program to provide the general public and Federal agencies with an opportunity to comment on proposed and/or continuing collections of information in accordance with the Paperwork Reduction Act of 1995 (PRA95) [44 U.S.C. 3506(c)(2)(A)]. This program helps ensure that requested data is provided in the desired format, reporting burden (time and financial resources) is minimized, collection instruments are clearly understood, and the impact of collection requirements on respondents can be properly assessed.

DATES: Submit comments on or before January 31, 2005.

ADDRESSES: Send comments to Debbie Ferraro, Records Management Branch, 1100 Wilson Boulevard, Room 2171, Arlington, VA 22209–3939. Commenters are encouraged to send their comments on computer disk, or via E-mail to *ferraro.debbie@dol.gov*. Ms. Ferraro can be reached at (202) 693–9821 (voice), or (202) 693–9801 (facsimile).

FOR FURTHER INFORMATION CONTACT: Contact the employee listed in the **ADDRESSES** section of this notice.

SUPPLEMENTARY INFORMATION:

I. Background

Persons performing tasks and certain required examinations at coal mines related to miner safety and health,

which require specialized training, experience, and physical qualifications, are required to be either ''certified'' or ''qualified''. The regulations recognized State certification and qualification programs. However, under the Federal Mine Safety and Health Act of 1977 and MSHA standards, where State programs do not exist, MSHA may certify and qualify persons for as long as they continue to satisfy the requirements needed to obtain the certification or qualification, fulfill any applicable retraining requirements, and remained employed at the same mine or by the same independent contractor.

Applications for Secretarial qualification or certification are submitted to the MSHA Qualification and Certification Unit in Denver, Colorado. Form 5000–41 provides the coal mining industry with a standardized reporting format that expedited the certification and qualification process while ensuring compliance with the regulations. MSHA uses the form's information to determine if applicants satisfy the requirements to obtain the certification or qualification sought. Persons must meet certain minimum experience requirements depending on the type of certification or qualification.

Sections 75.155 and 77.105 of Title 30 of the CFR explain the qualifications to be a qualified hoisting engineer or a qualified hoist man on a slope or shaft sinking operation. Sections 75.100 and 77.100 pertain to the certification of certain persons to perform specific examinations and tests. Under §§ 75.160, 75.161, 77.107 and 77.107–1, the mine operator must have an approved training plan developed to train and retrain the qualified and certified people to effectively perform their tasks.

Sections 75.159 and 77.106 requires the operator of a mine to maintain a list of all certified and qualified persons designated to perform certain duties, which require specialized expertise at underground and surface coal mines, *i.e.*, conduct test for methane and oxygen deficiency, conduct tests of air flow, perform electrical work, repair energized surface high-voltage lines, and perform duties of hoisting engineer. The recorded information is necessary to ensure that only persons who are properly trained and have the required number of years of experience are permitted to perform these duties. MSHA does not specify a format for the recordkeeping; however, it normally consists of the names of the certified and qualified person listed in two columns on a sheet of paper. One column is for certified persons and the other is for qualified persons.

II. Desired Focus of Comments

Currently, the Mine Safety and Health Administration (MSHA) is soliciting comments concerning the proposed extension of the information collection requirement related to the Qualification/Certification Program and Man Hoist Operators Physical Fitness. MSHA is particularly interested in comments that:

- Evaluate whether the proposed collection of information is necessary for the proper performance of the functions of the agency, including whether the information will have practical utility;
- Evaluate the accuracy of the agency's estimate of the burden of the proposed collection of information, including the validity of the methodology and assumptions used;
- Enhance the quality, utility, and clarity of the information to be collected; and
- Minimize the burden of the collection of information on those who are to respond, including through the use of appropriate automated, electronic, mechanical, or other technological collection techniques or other forms of information technology, *e.g.*, permitting electronic submissions of responses.

A copy of the proposed information collection request can be obtained by contacting the employee listed in the **ADDRESSES** section of this notice or viewed on the Internet by accessing the MSHA Home page (*http://www.msha.gov*) and then choosing ''Statutory and Regulatory Information'' and ''**Federal Register** Documents.''

III. Current Actions

This request for collection of information contains provisions whereby persons may be temporarily qualified or certified to perform tests and examinations; requiring specialized expertise; related to inner safety and health at coal mines.

Type of Review: Extension.

Agency: Mine Safety and Health Administration.

Title: Qualification/Certification Program and Man Hoist Operators Physical Fitness.

OMB Number: 1219–0127.

Frequency: Quarterly and on occasion.

Affected Public: Business or other for-profit.

Number of Respondents: 1,989.

Estimated Time per Respondent: 9 hours.

Recordkeeping: One year.

Total Burden Hours: 17,723.

Total Burden Cost (capital/startup): 0.

Total Burden Cost (operating/maintaining): $902.

Comments submitted in response to this notice will be summarized and/or included in the request for Office of Management and Budget approval of the information collection request; they will also become a matter of public record.

Dated at Arlington, Virginia, this 23rd day of November, 2004.

David L. Meyer,

Director, Office of Administration and Management

[FR Doc. 04–26451 Filed 11–30–04; 8:45 am]

BILLING CODE 4510–43–P

SECURITIES AND EXCHANGE COMMISSION

[Release No. 34–50726; File No. SR–Amex–2004–92]

Self-Regulatory Organizations; Notice of Filing and Immediate Effectiveness of a Proposed Rule Change by the American Stock Exchange LLC to Correct a Cross-Reference in Section 220 of the Amex Company Guide

November 23, 2004.

Pursuant to section 19(b)(1) of the Securities Exchange Act of 1934 (''Act'')[1] and Rule 19b–4 thereunder,[2] notice is hereby given that on November 19, 2004, the American Stock Exchange LLC (''Amex'' or ''Exchange'') filed with the Securities and Exchange Commission the proposed rule change as described in items I and III below, which items have been prepared by the Amex. The Commission is publishing this notice to solicit comments on the proposed rule change from interested persons.

I. Self-Regulatory Organization's Statement of the Terms of Substance of the Proposed Rule Change

Amex proposes to amend a cross-reference in Section 220 of the *Amex Company Guide*. New text is in italics. Proposed deletions are in brackets.

* * * * *

Sec. 220.

ORIGINAL LISTING APPLICATIONS OF FOREIGN ISSUERS—GENERAL

(a) No change.

(b) Listing Fee—For companies listed on foreign stock exchanges, the original listing fee, including the one-time charge, is 50% of the rate for domestic companies, with a maximum fee of

[1] 15 U.S.C. 78s(b)(1).

[2] 17 CFR 240.19b–4.

[$25,000] *$32,500* (see § 140). Additional and annual fees are the same as charged for domestic companies (see §§ 141 and 142).

* * * * *

II. Self-Regulatory Organization's Statement of the Purpose of, and Statutory Basis for, the Proposed Rule Change

In its filing with the Commission, the Amex included statements concerning the purpose of and basis for the proposed rule change and discussed any comments it received on the proposed rule change. The text of these statements may be examined at the places specified in item IV below. The Amex has prepared summaries, set forth in sections A, B, and C below, of the most significant aspects of such statements.

A. Self-Regulatory Organization's Statement of the Purpose of, and the Statutory Basis for, the Proposed Rule Change

1. Purpose

On December 6, 2001, the Exchange submitted a proposal amending multiple sections of the Amex *Company Guide* relating to the initial and annual listing fees, fees for listing additional shares, and the one-time charge for listing shares issued in connection with the acquisition of a listed company by an unlisted company. Specifically, an amendment was made to Section 140 of the Amex *Company Guide* to increase the maximum original listing fees charged to non-U.S. companies that are listed on a foreign stock exchange from $25,000 to $32,500.[3] Unfortunately, at the time of the proposed rule change, a cross-reference to this exact fee in Section 220(b) of the Amex *Company Guide* was overlooked and, therefore, not updated. Section 220(b) currently, and inaccurately, reads that the maximum fee charged in the abovementioned circumstance is $25,000. The Amex is proposing to correct the cross-reference in Section 220(b) to read $32,500 in order to keep its published rules accurate.

2. Statutory Basis

The proposed rule change is consistent with section 6(b) of the Act,[4] in general and furthers the objectives of section 6(b)(5) of the Act,[5] in particular, in that it is designed to prevent fraudulent and manipulative acts and practices, to promote just and equitable principles of trade, to foster cooperation and coordination with persons engage in regulating, clearing, settling, processing information with respect to and facilitating transactions in securities, to remove impediments to and perfect the mechanism of a free and open market and a national market system, and, in general, to protect investors and the public interest; and is not designed to permit unfair discrimination between customers, issuers, brokers and dealers.

B. Self-Regulatory Organization's Statement on Burden on Competition

The Amex does not believe that the proposed rule change will impose any burden on competition that is not necessary or appropriate in furtherance of the purposes of the Act.

C. Self-Regulatory Organization's Statement on Comments on the Proposed Rule Change Received From Members, Participants or Others

No written comments were solicited or received with respect to the proposed rule change.

III. Date of Effectiveness of the Proposed Rule Change and Timing for Commission Action

Because the foregoing proposed rule change does not:

(i) Significantly affect the protection of investors or the public interest;

(ii) Impose any significant burden on competition; and

(iii) Become operative for 30 days from the date on which it was filed, or such shorter time as the Commission may designate if consistent with the protection of investors and the public interest, it has become effective pursuant to section 19(b)(3)(A) of the Act[6] and Rule 19b–4(f)(6) thereunder.[7]

At any time within 60 days of the filing of the proposed rule change, the Commission may summarily abrogate such rule change if it appears to the Commission that such action is necessary or appropriate in the public interest, for the protection of investors, or otherwise in furtherance of the purposes of the Act.

The Amex has requested that the Commission waive the 30-day operative delay period. The Commission believes that allowing the Exchange to correct this cross-reference in its rules is consistent with the protection of investors and the public interest, and therefore waives the 30-day operative delay.[8]

IV. Solicitation of Comments

Interested persons are invited to submit written data, views, and arguments concerning the foregoing, including whether the proposed rule change is consistent with the Act. Comments may be submitted by any of the following methods:

Electronic Comments

- Use the Commission's Internet comment form (*http://www.sec.gov/rules/sro.shtml*); or
- Send an e-mail to *rulecomments@sec.gov*. Please include File Number SR–Amex–2004–92 on the subject line.

Paper Comments

- Send paper comments in triplicate to Jonathan G. Katz, Secretary, Securities and Exchange Commission, 450 Fifth Street, NW., Washington, DC 20549–0609.

All submissions should refer to File Number SR–Amex–2004–92. This file number should be included on the subject line if e-mail is used. To help the Commission process and review your comments more efficiently, please use only one method. The Commission will post all comments on the Commission's Internet Web site (*http://www.sec.gov/rules/sro.shtml*). Copies of the submission, all subsequent amendments, all written statements with respect to the proposed rule change that are filed with the Commission, and all written communications relating to the proposed rule change between the Commission and any person, other than those that may be withheld from the public in accordance with the provisions of 5 U.S.C. 552, will be available for inspection and copying in the Commission's Public Reference Room. Copies of such filing also will be available for inspection and copying at the principal office of the Amex. All comments received will be posted without change; the Commission does not edit personal identifying information from submissions. You should submit only information that you wish to make available publicly. All submissions should refer to File Number SR–Amex–2004–92 and should

[3] *See* Securities Exchange Act Release No. 45403 (February 6, 2002), 67 FR 6553 (February 12, 2002) (approving File No. SR–Amex–2001–100).

[4] 15 U.S.C. 78(b).

[5] 15 U.S.C. 78(b)(5).

[6] 15 U.S.C. 78s(b)(3)(A).

[7] 17 CFR 240.19b–4(f)(6). In addition, Rule 19b–4(f)(6) requires a self-regulatory organization to give the Commission written notice of its intent to file the proposed rule change, along with a brief description and text of the proposed rule change, at least five business days prior to the date of filing of the proposed rule change, or such shorter time as designated by the Commission. The Amex complied with this requirement.

[8] For purposes of waiving the operative period date of this proposal only, the Commission has considered the proposed rule's impact on efficiency, competition and capital formation. 15 U.S.C. 78c(f).

be submitted on or before December 22, 2004.

For the Commission by the Division of Market Regulation, pursuant to delegated authority.[9]

Margaret H. McFarland,

Deputy Secretary.

[FR Doc. E4–3408 Filed 11–30–04; 8:45 am]

BILLING CODE 8010–01–P

SECURITIES AND EXCHANGE COMMISSION

[Release No. 34–50733; File No. SR–BSE–2004–50]

Self-Regulatory Organizations; Boston Stock Exchange, Inc.; Notice of Filing and Immediate Effectiveness of Proposed Rule Change To Eliminate a Restriction Precluding a BSE Specialist From Trading Both Nasdaq-Listed and New York Stock Exchange-Listed Securities Simultaneously

November 24, 2004.

Pursuant to Section 19(b)(1) of the Securities Exchange Act of 1934 (''Act'')[1] and Rule 19b–4 thereunder,[2] notice is hereby given that on November 22, 2004, the Boston Stock Exchange, Inc., (''BSE'' or ''Exchange'') filed with the Securities and Exchange Commission (''Commission'') the proposed rule change as described in Items I and II, below, which Items have been prepared by the Exchange. The BSE filed the proposed rule change pursuant to section 19(b)(3)(A) of the Act[3] and Rule 19b–4(f)(6) thereunder,[4] which renders it effective upon filing with the Commission. The Commission is publishing this notice to solicit comments on the proposed rule change from interested persons.

I. Self-Regulatory Organization's Statement of the Terms of Substance of the Proposed Rule Change

The BSE proposes to eliminate the restrictions precluding a BSE specialist from trading both Nasdaq-listed and New York Stock Exchange (''NYSE'')-listed securities at the same time. The text of the proposed rule change is below. Proposed deletions are in brackets.[5]

Chapter XXXV

Limitations on Specialists

[Sec. 11. Any individual member who is registered as a specialist is not permitted to maintain a book, as defined in Chapter XV, Specialists, Section 6, The Specialist's Book, in both Nasdaq securities and listed securities. Nasdaq securities must comprise a separate book which must be solely traded by a separate specialist. A specialist who is qualified under the provisions of this Chapter XXXV, and the provisions of Chapter XV, Specialists, Section 1, Registration, to trade either listed or Nasdaq securities, or both, cannot accept orders in, nor effect transactions in, both types of securities, at the same time.

Nothing in this section shall preclude any duly qualified specialist from occasionally substituting for, or acting as an alternate for, another specialist in either listed or Nasdaq securities, in accordance with Article XVI of the Constitution of the Boston Stock Exchange, Officers and Associates, Section 7, Alternates for Members Absent. A specialist substituting for another specialist in accordance with the provisions of this section will be permitted to trade both Nasdaq and listed securities at the same time, during the period of substitution. In the case of an extended or permanent absence of a specialist qualified to trade Nasdaq securities, the firm from which the specialist is absent must promptly notify the Exchange and make arrangements to permanently replace the absent specialist in a reasonable amount of time, as determined by the Exchange. The Exchange reserves the right to temporarily reassign some or all of the Nasdaq securities comprising an absent specialist's book in the event that a firm does not make suitable or timely arrangements for the replacement of the absent specialist.]

* * * * *

II. Self-Regulatory Organization's Statement of the Purpose of, and Statutory Basis for, the Proposed Rule Change

In its filing with the Commission, the Exchange included statements concerning the purpose of, and basis for, the proposed rule change and discussed any comments it received on the proposed rule change. The text of these statements may be examined at the places specified in Item IV below. The Exchange has prepared summaries, set forth in Sections A, B, and C below, of the most significant aspects of such statements.

A. Self-Regulatory Organization's Statement of the Purpose of, and Statutory Basis for, the Proposed Rule Change

1. Purpose

The Exchange proposes to eliminate the restrictions, as set forth in Chapter XXXV, Trading in Nasdaq Securities, Section 11, Limitations on Specialists. This Section precludes a BSE specialist from trading both Nasdaq-listed and NYSE-listed securities at the same time.

Originally, the primary reason for the restriction was to separate specialists' books so that the BSE would be able to ensure that specialists maintained adequate levels of capital in their respective accounts. When the rule was first proposed,[6] the Exchange anticipated that individual BSE specialists might seek to trade large numbers of Nasdaq-listed securities, and the Exchange was concerned that such a practice would lead to an undue concentration of stocks within a single specialist book. The Exchange was also concerned that differences in the marketplaces for Nasdaq-listed and NYSE-listed securities necessitated a requirement that a specialist concentrate on trading in either the Nasdaq or NYSE-listed marketplace, but not both at the same time.

Since the rule was approved,[7] BSE specialist trading practices have gradually evolved to the point that the specialists are limiting their trading to a much more limited number of securities. As a result, the concern regarding undue concentration of stocks within a single specialist book has lessened considerably. Also, regardless of the number of stocks within a specialist's book, the Exchange consistently monitors all of its specialist accounts regarding proper capitalization and risk levels, and is confident in its ability to proactively manage that risk, regardless of the types of securities within an account.

Moreover, with the proposal set forth in Regulation NMS[8] that all securities, regardless of listing market, be considered NMS securities, and the proposals to apply uniform rules (such as the trade-through rule proposal[9]) to all securities, the Exchange no longer believes that it is necessary, or prudent, to distinguish between Nasdaq-listed

[9] 17 CFR 200.30–3(a)(12).

[1] 15 U.S.C. 78s(b)(1).

[2] 17 CFR 240.19b–4.

[3] 15 U.S.C. 78s(b)(3)(A).

[4] 17 CFR 240.19b–4(f)(6).

[5] With the instant proposed rule change, the BSE eliminated Section 11 of Chapter XXXV (''Limitations on Specialists''). As a result, all subsequent Sections in Chapter XXXV are renumbered.

[6] *See* Securities Exchange Act Release No. 44476 (June 26, 2001), 66 FR 35293 (July 3, 2001) (SR–BSE–2001–01).

[7] See Securities Exchange Act Release No. 44952 (October 18, 2001), 66 FR 54039 (October 25, 2001) (SR-BSE–2001–01).

[8] *See* Securities Exchange Act Release No. 49325 (February 26, 2004), 69 FR 11126 (March 9, 2004).

[9] *Id.* at 69 FR 11129–11153.

and NYSE-listed securities for the purposes of restricting a specialist's trading activities. Recently enacted Regulation SHO [10] also does not distinguish between NYSE-listed and Nasdaq-listed securities in its application. The BSE is seeking to proactively respond to the trend of treating all securities as one type, and as part of a single national market system.

Most importantly, however, is that, on November 9, 2004, Nasdaq officially announced that it would be assuming the listing of the Nasdaq-100 Index Tracking Stock (the ''QQQs''), effective December 1, 2004. Several BSE specialists currently trade the QQQs as an NYSE-listed security. As a result of the prohibition currently set forth in the BSE's rules, those specialists would no longer be able to transact business in the QQQs on the BSE. Since the BSE is the only UTP Exchange that currently has this restriction in place, BSE specialists, and the BSE, would be placed at a severe competitive disadvantage, as a result of actions beyond the Exchange's control, if the BSE does not remove this restriction.

Accordingly, the Exchange has asked the Commission to waive the 30-day operative delay of the proposed rule change, to allow it to be both effective and operative upon filing with the Commission.

2. Statutory Basis

The BSE believes that the proposed rule change is consistent with the requirements of Section 6(b) of the Act,[11] in general, and Section 6(b)(5)[12] in particular, in that it is designed to promote just and equitable principles of trade, to remove impediments to and perfect the mechanism of a free and open market and a national market system, and is not designed to permit unfair discrimination between customers, brokers, or dealers, or to regulate by virtue of any authority matters not related to the administration of the Exchange.

B. Self-Regulatory Organization's Statement on Burden on Competition

The Exchange does not believe that the proposed rule change will impose any burden on competition.

C. Self-Regulatory Organization's Statement on Comments on the Proposed Rule Change Received From Members, Participants or Others

The Exchange has neither solicited nor received comments on the proposed rule change.

III. Date of Effectiveness of the Proposed Rule Change and Timing for Commission Action

Because the foregoing proposed rule change does not:

(i) Significantly affect the protection of investors or the public interest;

(ii) Impose any significant burden on competition; and

(iii) Become operative for 30 days from the date on which it was filed, or such shorter time as the Commission may designate, it has become effective pursuant to Section 19(b)(3)(A) of the Act [13] and Rule 19b–4(f)(6) thereunder.[14] At any time within 60 days of the filing of the proposed rule change, the Commission may summarily abrogate such rule change if it appears to the Commission that such action is necessary or appropriate in the public interest, for the protection of investors, or otherwise in furtherance of the purposes of the Act.

The BSE has asked that the Commission waive the 30-day operative delay contained in Rule 19b–4(f)(6)(iii) under the Act.[15] The Commission believes such waiver is consistent with the protection of investors and the public interest, for it will allow BSE specialists that currently trade the QQQs as a NYSE-listed security to continue to do so as of December 1, 2004, when Nasdaq will assume the listing of the QQQs. For these reasons, the Commission designates the proposal to be effective and operative upon filing with the Commission.[16]

IV. Solicitation of Comments

Interested persons are invited to submit written data, views, and arguments concerning the foregoing, including whether the proposed rule change is consistent with the Act.

Comments may be submitted by any of the following methods:

Electronic Comments

- Use the Commission's Internet comment form (http://www.sec.gov/rules/sro.shtml); or
- Send an e-mail to *rule-comments@sec.gov*. Please include File Number SR–BSE–2004–50 on the subject line.

Paper Comments

- Send paper comments in triplicate to Jonathan G. Katz, Secretary, Securities and Exchange Commission, 450 Fifth Street, NW., Washington, DC 20549–0609.

All submissions should refer to File Number SR–BSE–2004–50. This file number should be included on the subject line if e-mail is used. To help the Commission process and review your comments more efficiently, please use only one method. The Commission will post all comments on the Commission's Internet Web site (*http://www. sec.gov/rules/sro.shtml*). Copies of the submission, all subsequent amendments, all written statements with respect to the proposed rule change that are filed with the Commission, and all written communications relating to the proposed rule change between the Commission and any person, other than those that may be withheld from the public in accordance with the provisions of 5 U.S.C. 552, will be available for inspection and copying in the Commission's Public Reference Section, 450 Fifth Street, NW., Washington, DC 20549. Copies of such filing also will be available for inspection and copying at the principal office of the BSE. All comments received will be posted without change; the Commission does not edit personal identifying information from submissions. You should submit only information that you wish to make available publicly. All submissions should refer to File Number SR–BSE–2004–50 and should be submitted on or before December 22, 2004.

For the Commission, by the Division of Market Regulation, pursuant to delegated authority.[17]

Margaret H. McFarland,

Deputy Secretary.

[FR Doc. E4–3405 Filed 11–30–04; 8:45 am]

BILLING CODE 8010–01–P

[10] *See* Securities Exchange Act Release No. 50103 (July 28, 2004), 69 FR 48008 (August 6, 2004).

[11] 15 U.S.C. 78f(b).

[12] 15 U.S.C. 78f(b)(5).

[13] 15 U.S.C. 78s(b)(3)(A).

[14] 17 CFR 240.19b–4(f)(6). In addition, Rule 19b–4(f)(6)(iii) requires that a self-regulatory organization provide the Commission written notice of its intent to file a proposed rule change, along with a brief description and text of the proposed rule change, at least five business days prior to the date of filing of the proposed rule change with the Commission. The BSE complied with this requirement.

[15] 17 CFR 240.19b–4(f)(6)(iii).

[16] For purposes only of accelerating the operative date of this proposal, the Commission has considered the proposed rule's impact on efficiency, competition, and capital formation. *See* 15 U.S.C. 78c(f).

[17] 17 CFR 200.30–3(a)(12).

SECURITIES AND EXCHANGE COMMISSION

[Release No. 34–50735; File No. SR–CBOE–2004–69]

Self-Regulatory Organizations; Notice of Filing and Immediate Effectiveness of Proposed Rule Change by the Chicago Board Options Exchange, Incorporated to Eliminate the Exchange's Marketing Fee Voting Procedures

November 24, 2004.

Pursuant to Section 19(b)(1) of the Securities Exchange Act of 1934 (''Act''),[1] and Rule 19b–4 thereunder,[2] notice is hereby given that on October 29, 2004, the Chicago Board Options Exchange, Incorporated (''CBOE'' or ''Exchange'') filed with the Securities and Exchange Commission (''SEC'' or ''Commission'') the proposed rule change as described in Items I, II, and III below, which Items have been prepared by the Exchange. The Exchange filed the proposal pursuant to Section 19(b)(3)(A)(iii) of the Act[3] and Rule 19b–4(f)(6) thereunder,[4] which renders the proposal effective upon filing with the Commission.[5] The Commission is publishing this notice to solicit comments on the proposed rule change.

I. Self-Regulatory Organization's Statement of the Terms of Substance of the Proposed Rule Change

The CBOE proposes to eliminate its Marketing Fee Voting Procedures, previously set forth in Interpretation and Policy .12 to CBOE Rule 8.7. Proposed new language is *italicized*; proposed deletions are in [brackets].

Rule 8.7 Obligations of Market-Makers

* * * * *

Interpretations and Policies

.01–.11 No change.

.12 *Reserved*. [Marketing Fee Voting Procedures: The following procedures specify how a trading crowd determines whether to participate or not to participate in the Exchange's marketing fee program. These procedures expire six months from the date of SEC approval, or such earlier time as the Commission has approved them on a permanent basis.

(a) Eligible Voters.

(i) The term ''trading crowd'' is synonymous with the term ''station,'' which is defined in Interpretation and Policy .01 to Rule 8.8.

(ii) Eligible Trading Crowd Members: Members of a trading crowd that will be eligible to participate in the vote (''eligible trading crowd members'') shall include (1) those Market-Makers who have transacted at least 80% of their Market-Maker contracts and transactions in each of the three immediately preceding calendar months in option classes traded in the trading crowd, and who continue to be present in the trading crowd in the capacity of a Market-Maker at the time of the vote; (2) the DPM for a trading crowd; and (3) any e-DPM, and shall each have one vote. Any e-DPM appointed to one or more option classes shall be eligible to vote on marketing fees for those option classes.

(b) Requesting a Trading Crowd Vote. Any eligible trading crowd member (including the DPM and any e-DPM) can request that a vote be held to determine whether or not the trading crowd should continue to participate in the marketing fee program for one or more of the option classes located at that station by submitting a written request to that effect to the Secretary of the Exchange. The Exchange shall post a notice at the station and provide written notice to the e-DPM of the time and date of any vote to be taken at least 10 calendar days prior to the time of the vote. The marketing fee oversight committee shall determine all other administrative procedures pertaining to the vote.

(c) Participation in the Marketing Fee Program. A trading crowd shall be deemed to have indicated that it desires to participate in the Exchange's marketing fee program for one or more of the option classes located at that station if a majority of those eligible trading crowd members participate in the vote and if a majority of the total votes cast are in favor of participating in the marketing fee program for those option classes. Conversely, a trading crowd shall be deemed to have indicated that it does not desire to participate in the Exchange's marketing fee program for one or more of the option classes located at that station if a majority of those eligible trading crowd members participate in the vote and if a majority of the total votes cast are against participating in the marketing fee program for those option classes.

(i) Frequency of Vote: Once a crowd votes to participate in the marketing fee program, subsequent votes to determine whether to continue its participation may be held only once every three calendar months. Once a crowd votes not to participate in the marketing fee program, subsequent votes to determine whether to participate in the marketing fee program may be held only once every thirty days.

(ii) Tie Votes: If a vote conducted in accordance with this rule results in a tie, the status quo for that trading crowd shall remain in effect. Accordingly, if the trading crowd currently participates in the marketing fee program and a tie vote occurs, the marketing fee program will remain in effect in that trading crowd. If the trading crowd does not participate in the marketing fee at the time the tie vote occurs, the marketing fee will not be implemented in the trading crowd at that time.]

.13 No Change.

A. Self-Regulatory Organization's Statement of the Purpose of, and Statutory Basis for, the Proposed Rule Change

1. Purpose

On July 30, 2004,[6] the CBOE amended Interpretation and Policy .12 to CBOE Rule 8.7, setting forth voting procedures specifying how a trading crowd, including the DPM and e-DPM, determines whether or not to participate in the Exchange's marketing fee program.[7] The marketing fee voting procedures were adopted as a six-month pilot. The CBOE has determined to replace its current marketing fee program that is assessed on DPM, e-DPM, and Market-Maker transactions in all equity option classes in which a DPM has been appointed. The marketing fee is assessed only on those Market-Maker, DPM, and e-DPM transactions resulting from orders from customers of payment accepting firms with which the DPM has agreed to pay for that firm's order flow, and only with respect to orders from customers that are for 200 contracts or less. According to the Exchange, on October 28, 2004, it held a special meeting of its membership for the purpose of holding a membership vote on its proposed new marketing fee program. The Exchange states that CBOE membership voted in favor of approving the new marketing fee program, which does not include a marketing fee voting procedure. In conjunction with this filing, the CBOE has filed a rule change incorporating the

[1] 15 U.S.C. 78s(b)(1).

[2] 17 CFR 240.19b–4.

[3] 15 U.S.C. 78s(b)(3)(A)(iii).

[4] 17 CFR 240.19b–4(f)(6).

[5] The Exchange has asked the Commission to waive the 30-day operative delay. See Rule 19b–4(f)(6)(iii).

[6] Telephone conversation between Andrew Spiwak, Director Legal Division and Chief Enforcement Attorney, CBOE, and David Liu, Attorney, Division of Market Regulation, Commission, on November 2, 2004.

[7] The marketing fee voting procedures were described in SR–CBOE–2004–47 (*see* Securities Exchange Act Release 50130 (July 30, 2004) 69 FR 47965 (August 6, 2004).)

new marketing fee program pursuant to Section 19(b)(3)(A)(ii) of the Act[8] and subparagraph (f)(2) of Rule 19b–4 thereunder.[9]

2. Statutory Basis

The CBOE believes that the elimination of Interpretation and Policy .12 to Rule 8.7 is consistent with and in furtherance of the objectives of Section 6(b)(5) of the Act[10] in that it is designed to enhance competition to promote just and equitable principles of trade and to remove impediments to and perfect the mechanisms of a free and open market.

B. Self-Regulatory Organization's Statement on Burden on Competition

The Exchange does not believe that the proposed rule change will impose any burden on competition.

C. Self-Regulatory Organization's Statement on Comments on the Proposed Rule Change Received From Members, Participants or Others

The Exchange has neither solicited nor received comments on the proposed rule change.

III. Date of Effectiveness of the Proposed Rule Change and Timing for Commission Action

The foregoing proposed rule change has become effective pursuant to Section 19(b)(3)(A) of the Act[11] and Rule 19b–4(f)(6) thereunder[12] because the proposal: (i) Does not significantly affect the protection of investors or the public interest; (ii) does not impose any significant burden on competition; and (iii) does not become operative prior to 30 days after the date of filing (or such shorter time as the Commission may designate if consistent with the protection of investors and the public interest).

A proposed rule change filed under Rule 19b–4(f)(6) normally does not become operative prior to 30 days after the date of filing. However, Rule 19b–4(f)(6)(iii) permits the Commission to designate a shorter time if such action is consistent with the protection of investors and the public interest. The Exchange satisfied the five-day pre-filing requirement. The Exchange requests that the Commission waive the 30-day operative delay, as specified in Rule 19b–4(f)(6)(iii),[13] and designate the proposed rule change to become operative immediately.

The CBOE has requested that the Commission waive the 30-day operative delay and to designate the proposed rule change as operative on November 1, 2004, to facilitate the implementation of the new marketing fee program that became effective on November 1, 2004. The Commission believes that waiving the 30-day operative period is consistent with the protection of investors and the public interest.[14] The Commission believes that waiving the 30-day operative delay would permit the Exchange to eliminate the Marketing Fee Voting Procedures at the same time that it implements its revised marketing fee program. Under the Exchange's revised marketing fee program, which applies to all classes of equity options, voting procedures would not be a part of the program.[15] Accordingly, the Commission, consistent with the protection of investors and the public interest, has waived the 30-day operative date requirement for this proposed rule change, and has determined to designate the proposed rule change as operative on November 1, 2004, to facilitate the implementation of the new marketing fee program that became effective on November 1, 2004.[16]

At any time within 60 days of the filing of such proposed rule change, the Commission may summarily abrogate such rule change if it appears to the Commission that such action is necessary or appropriate in the public interest, for the protection of investors or otherwise in furtherance of the purposes of the Act.

IV. Solicitation of Comments

Interested persons are invited to submit written data, views, and arguments concerning the foregoing, including whether the proposed rule change is consistent with the Act. Comments may be submitted by any of the following methods:

Electronic Comments

- Use the Commission's Internet comment form (*http://www.sec.gov/rules/sro.shtml*); or
- Send an e-mail to *rule-comments@sec.gov*. Please include File Number SR–CBOE–2004–69 on the subject line.

Paper Comments

- Send paper comments in triplicate to Jonathan G. Katz, Secretary, Securities and Exchange Commission, 450 Fifth Street, NW., Washington, DC 20549–0609.

All submissions should refer to File Number SR–CBOE–2004–69. This file number should be included on the subject line if e-mail is used. To help the Commission process and review your comments more efficiently, please use only one method. The Commission will post all comments on the Commission's Internet Web site (*http://www.sec.gov/rules/sro.shtml*). Copies of the submission, all subsequent amendments, all written statements with respect to the proposed rule change that are filed with the Commission, and all written communications relating to the proposed rule change between the Commission and any person, other than those that may be withheld from the public in accordance with the provisions of 5 U.S.C. 552, will be available for inspection and copying in the Commission's Public Reference Section, 450 Fifth Street, NW., Washington, DC 20549. Copies of such filing also will be available for inspection and copying at the principal office of the CBOE. All comments received will be posted without change; the Commission does not edit personal identifying information from submissions. You should submit only information that you wish to make available publicly. All submissions should refer to File Number SR–CBOE–2004–69 and should be submitted on or before December 22, 2004.

For the Commission, by the Division of Market Regulation, pursuant to delegated authority.[17]

Margaret H. McFarland,

Deputy Secretary.

[FR Doc. E4–3401 Filed 11–30–04; 8:45 am]

BILLING CODE 8010–01–P

[8] 15 U.S.C. 78s(b)(3)(A)(ii).

[9] 17 CFR 240.19b–4(f)(2). The CBOE filed a rule change to adopt a new marketing fee to be imposed on transactions of Market-Makers (including Designated Primary Market-Makers, or DPMs, and electronic Designated Primary Market-Makers, or e-DPMs) pursuant to Section 19(b)(3)(A)(ii) of the Act and subparagraph (f)(2) of Rule 19b–4 thereunder (*see* SR–CBOE–2004–68).

[10] 15 U.S.C. 78f(b)(5).

[11] 15 U.S.C. 78s(b)(3)(A).

[12] 17 CFR 240.19b–4(f)(6).

[13] 17 CFR 240.19b–4(f)(6)(iii).

[14] For purposes only of accelerating the operative date of this proposal, the Commission has considered the proposed rule's impact on efficiency, competition, and capital formation. 15 U.S.C. 78c(f).

[15] *See supra* note 9.

[16] *Id.*

[17] 17 CFR 200.30–3(a)(12).

SECURITIES AND EXCHANGE COMMISSION

[Release No. 34–50736; File No. SR–CBOE–2004–68]

Self-Regulatory Organizations; Notice of Filing and Immediate Effectiveness of Proposed Rule Change by the Chicago Board Options Exchange, Inc. To Adopt a New Marketing Fee

November 24, 2004.

Pursuant to Section 19(b)(1) of the Securities Exchange Act of 1934 (''Act''),[1] and Rule 19b–4 thereunder,[2] notice is hereby given that on October 29, 2004, the Chicago Board Options Exchange, Inc. (''CBOE'' or ''Exchange'') filed with the Securities and Exchange Commission (''Commission'') the proposed rule change as described in Items I, II and III below, which Items have been prepared by the CBOE. On November 2, 2004, CBOE submitted Amendment No. 1 to the proposed rule change.[3] The CBOE has designated this proposal as one establishing or changing a due, fee, or other charge imposed by the CBOE under Section 19(b)(3)(A)(ii) of the Act,[4] and Rule 19b–4(f)(2) thereunder,[5] which renders the proposal effective upon filing with the Commission. The Commission is publishing this notice to solicit comments on the proposed rule change from interested persons.

I. Self-Regulatory Organization's Statement of the Terms of Substance of the Proposed Rule Change

The CBOE proposes to adopt a new marketing fee to be imposed on transactions of Market-Makers (including Designated Primary Market-Makers, or DPMs, and electronic Designated Primary Market-Makers, or e-DPMs) other than Market-Maker-to-Market-Maker transactions. The fee will be imposed at the rate of $.22 per contract on all classes of equity options. Below is the text of the proposed rule change. Proposed new language is *italicized*; proposed deletions are in [brackets].

Chicago Board Options Exchange, Inc.
Fee Schedule

1. Unchanged.

2. MARKET MAKER, e-DPM & DPM MARKETING FEE (in option classes in which a DPM has been appointed) (6) $.[40]*22*

3.–4. Unchanged.

Notes:

(1)–(5) No Change.

(6) The Marketing Fee will be assessed only on transactions of Market-Makers, e-DPMs and DPMs [resulting from customer orders from payment accepting firms with which the DPM has agreed to pay for that firm's order flow, and with respect to orders from customers that are for 200 contracts or less.] *at the rate of $.22 per contract on all classes of equity options other than Market-Maker-to-Market-Maker transactions. This fee shall not apply to index options and options on ETFs. The fee shall apply to options on HOLDRs. Should any surplus of the marketing fees at the end of each month occur, those funds would be carried forward to the following month. The Exchange would then refund such surplus at the end of the quarter, if any, on a pro rata basis based upon contributions made by the Market-Makers, e-DPMs and DPMs.*

(7)–(14) No change.

II. Self-Regulatory Organization's Statement of the Purpose of, and Statutory Basis for, the Proposed Rule Change

In its filing with the Commission, the CBOE included statements concerning the purpose of and basis for its proposal and discussed any comments it had received regarding the proposal. The text of these statements may be examined at the places specified in Item IV below. The CBOE has prepared summaries, set forth in Sections A, B and C below, of the most significant aspects of such statements.

A. Self-Regulatory Organization's Statement of the Purpose of, and Statutory Basis for, the Proposed Rule Change

1. Purpose

Currently, the CBOE imposes a marketing fee of $.40 per option contract on Market-Maker transactions, including transactions of DPMs and e-DPMs, in all classes of options in which a DPM has been appointed. The marketing fee is assessed only on those Market-Maker, DPM and e-DPM transactions resulting from orders from customers of payment accepting firms (''payment accepting firms'') with which the DPM has agreed to pay for that firm's order flow, and only with respect to orders from customers that are for 200 contracts or less.

The CBOE proposes to replace its current marketing fee that is assessed on DPM, e-DPM and Market Maker transactions in all equity option classes.[6] The CBOE states that the purpose of the new marketing fee plan is to provide the members of the Exchange with the ability to compete for the opportunity to trade with those orders that might otherwise be routed to other exchanges. The proposed marketing fee would be assessed whereby DPMs, e-DPMs and Market-Makers would be debited $.22 for every contract they enter into on the Exchange other than Market-Maker-to-Market-Maker transactions, including all transaction between any combination of DPMs, e-DPMs, and Market-Makers. This fee would not apply to index options and options on ETFs, but would apply to options on HOLDRs.[7]

The CBOE states that all funds generated by the marketing fee would be collected by the Exchange and recorded according to the DPM, station, and class where the options subject to the fee are traded (''Trading Crowds''). The money collected would be disbursed by the Exchange according to the instructions of the DPM. According to the Exchange, those funds would be available to the DPM solely for those Trading Crowds where the fee was assessed and could only be used by that DPM to attract orders in the classes of options for which the fee was assessed. The CBOE states that funds collected from e-DPMs would only be used to attract order flow for the classes in which the e-DPM is appointed. According to the CBOE, the Marketing Fee Oversight Committee, which the Exchange's Board of Directors has previously established, would conduct a quarterly review to determine the effectiveness of the proposed marketing fee and may recommend to the Exchange that it modify the fee in the future based upon its effectiveness.

Similar to the current marketing fee program, the Exchange states that it would not be involved in the determination of the terms governing the orders that qualify for payment or the amount of any payment. The Exchange would provide administrative support for the program in such matters as maintaining the funds, keeping track of the number of qualified orders each firm directs to the Exchange, and

[1] 15 U.S.C. 78s(b)(1).

[2] 17 CFR 240.19b–4.

[3] *See* letter from Andrew D. Spiwak, Director Legal Division and Chief Enforcement Attorney, CBOE, to Nancy Sanow, Assistant Director, Division of Market Regulation, Commission, dated November 2, 2004 (''Amendment No. 1''). Amendment No. 1 replaced the originally filed proposed rule text in full.

[4] 15 U.S.C. 78s(b)(3)(A)(ii).

[5] 17 CFR 240.19b–4(f)(2).

[6] On August 3, 2004, the Exchange amended its marketing fee to incorporate e-DPMs as part of the existing marketing fee. *See* Securities Exchange Act Release No. 50212 (August 18, 2004), 69 FR 52051 (August 24, 2004) (SR–CBOE–2004–55).

[7] HOLDRs are trust-issued receipts that represent an investor's beneficial ownership of a specified group of stocks. *See* Interpretation and Policy .07 to CBOE Rule 5.3.

making the necessary debits and credits to the accounts of the traders and the payment accepting firms to reflect the payments that are made. According to the CBOE, fees collected during a calendar month would only be available to the DPM for payment for that calendar month's order flow. The Exchange believes that the rate of $.22 would generally result in all funds being paid out at the end of the calendar month.

The CBOE states that the Marketing Fee Oversight Committee would review, on a quarterly basis, any surplus. Should any surplus of the marketing fees at the end of each month occur, those funds would be carried forward to the following month. The Exchange would then refund such surplus at the end of the quarter, if any, on a pro rata basis based upon contributions made by the Market-Makers. The Exchange believes that refunds, if any, would be *de minimis*. Thus, the Exchange states that refunding any surplus at the end of a quarter, rather than on a monthly basis, would be more efficient for Exchange administration.

The Exchange believes that the $.22 per contract is an equitable allocation of a reasonable fee among CBOE members and is designed to enable the CBOE to compete with other markets in attracting options order flow in multiply traded options.

According to the CBOE, it is important to note that Exchange Market-Makers, DPMs, and e-DPMs would have no way of identifying prior to execution whether a particular order is from a payment-accepting firm, or from a firm that does not accept payment for their order flow.

2. Statutory Basis

The Exchange believes that the proposed rule change is consistent with Section 6(b) of the Act [8] in general, and furthers the objectives of Section 6(b)(4) of the Act [9] in particular, in that it is designed to provide for the equitable allocation of reasonable dues, fees, and other charges among the CBOE's members.

B. Self-Regulatory Organization's Statement on Burden on Competition

The Exchange does not believe that the proposed rule change will impose any burden on competition that is not necessary or appropriate in furtherance of the purposes of the Act.

C. Self-Regulatory Organization's Statement on Comments on the Proposed Rule Change Received From Members, Participants or Others

The CBOE neither solicited nor received written comments with respect to the proposed rule change.

III. Date of Effectiveness of the Proposed Rule Change and Timing for Commission Action

Because the foregoing rule change establishes or changes a due, fee, or other charge imposed by the Exchange, it has become effective pursuant to Section 19(b)(3)(A)(ii) of the Act [10] and subparagraph (f)(2) of Rule 19b–4 thereunder.[11] Accordingly, the proposal will take effect upon filing with the Commission. At any time within 60 days after the filing of the proposed rule change, the Commission may summarily abrogate the rule change if it appears to the Commission that such action is necessary or appropriate in the public interest, for the protection of investors, or otherwise in furtherance of the purposes of the Act.

IV. Solicitation of Comments

Interested persons are invited to submit written data, views, and arguments concerning the foregoing, including whether the proposed rule change is consistent with the Act. Comments may be submitted by any of the following methods:

Electronic Comments

- Use the Commission's Internet comment form (*http://www.sec.gov/rules/sro.shtml*); or
- Send an e-mail to *rule-comments@sec.gov*. Please include File Number SR–CBOE–2004–68 on the subject line.

Paper Comments

- Send paper comments in triplicate to Jonathan G. Katz, Secretary, Securities and Exchange Commission, 450 Fifth Street, NW., Washington, DC 20549–0609.

All submissions should refer to File Number SR–CBOE–2004–68. This file number should be included on the subject line if e-mail is used. To help the Commission process and review your comments more efficiently, please use only one method. The Commission will post all comments on the Commission's Internet Web site (*http://www.sec.gov/rules/sro.shtml*). Copies of the submission, all subsequent amendments, all written statements with respect to the proposed rule change that are filed with the Commission, and all written communications relating to the proposed rule change between the Commission and any person, other than those that may be withheld from the public in accordance with the provisions of 5 U.S.C. 552, will be available for inspection and copying in the Commission's Public Reference Room. Copies of the filing also will be available for inspection and copying at the principal office of the CBOE. All comments received will be posted without change; the Commission does not edit personal identifying information from submissions. You should submit only information that you wish to make available publicly. All submissions should refer to File Number SR–CBOE–2004–68 and should be submitted on or before December 22, 2004.

For the Commission, by the Division of Market Regulation, pursuant to delegated authority.[12]

Margaret H. McFarland,

Deputy Secretary.

[FR Doc. E4–3403 Filed 11–30–04; 8:45 am]

BILLING CODE 8010–01–P

[8] 15 U.S.C. 78f(b).

[9] 15 U.S.C. 78f(b)(4).

[10] 15 U.S.C. 78s(b)(3)(A)(ii).

[11] 17 CFR 240.19b–4(f)(2).

[12] 17 CFR 200.30–3(a)(12).

SECURITIES AND EXCHANGE COMMISSION

[Release No. 34–50732; File No. SR–CBOE–2004–71]

Self-Regulatory Organizations; Chicago Board Options Exchange, Inc.; Notice of Filing of Proposed Rule Change To Modify the Distribution of the DPM Participation Entitlement for Orders Specifying a Preferred DPM Under CBOE Rule 8.87

November 23, 2004.

Pursuant to Section 19(b)(1) of the Securities Exchange Act of 1934 (''Act'') [1] and Rule 19b–4 thereunder,[2] notice is hereby given that on November 10, 2004, the Chicago Board Options Exchange, Inc. (''CBOE'' or ''Exchange'') filed with the Securities and Exchange Commission (''Commission'') the proposed rule change as described in Items I, II, and III below, which Items have been prepared by the CBOE. The Commission is publishing this notice to solicit comments on the proposed rule change from interested persons.

[1] 15 U.S.C. 78s(b)(1).

[2] 17 CFR 240.19b–4.

I. Self-Regulatory Organization's Statement of the Terms of Substance of the Proposed Rule Change

The CBOE proposes to modify the distribution of the Designated Primary Market-Maker (''DPM'') participation entitlement for orders specifying a Preferred DPM under CBOE Rule 8.87. Below is the text of the proposed rule change. Proposed new language is in *italics;* proposed deletions are in brackets.

Rule 8.87 Participation Entitlements of DPMs and e-DPMs

(a) No change.

(b) The participation entitlement for DPMs and e-DPMs (as defined in Rule 8.92) shall operate as follows:

(1) Generally.

(i) To be entitled to a participation entitlement, the DPM/e-DPM must be quoting at the best bid/offer on the Exchange.

(ii) A DPM/e-DPM may not be allocated a total quantity greater than the quantity that the DPM/e-DPM is quoting at the best bid/offer on the Exchange.

(iii) The participation entitlement is based on the number of contracts remaining after all public customer orders in the book at the best bid/offer on the Exchange have been satisfied.

(2) Participation Rates applicable to DPM Complex. The collective DPM/e-DPM participation entitlement shall be: 50% when there is one Market-Maker also quoting at the best bid/offer on the Exchange; 40% when there are two Market-Makers also quoting at the best bid/offer on the Exchange; and, 30% when there are three or more Market-Makers also quoting at the best bid/offer on the Exchange.

(3) Allocation of Participation Entitlement Between DPMs and e-DPMs. The participation entitlement shall be as follows: If the DPM and one or more e-DPMs are quoting at the best bid/offer on the Exchange, the e-DPM participation entitlement shall be one-half (50%) of the total DPM/e-DPM entitlement and shall be divided equally by the number of e-DPMs quoting at the best bid/offer on the Exchange. The remaining half shall be allocated to the DPM. If the DPM is not quoting at the best bid/offer on the Exchange and one or more e-DPMs are quoting at the best bid/offer on the Exchange, then the e-DPMs shall be allocated the entire participation entitlement (divided equally between them). If no e-DPMs are quoting at the best bid/offer on the Exchange and the DPM is quoting at the best bid/offer on the Exchange, then the DPM shall be allocated the entire participation entitlement. If only the DPM and/or e-DPMs are quoting at the best bid/offer on the Exchange (with no Market-Makers at that price), the participation entitlement shall not be applicable and the allocation procedures under Rule 6.45A shall apply.

(4) Allocation of Participation Entitlement Between DPMs and e-DPMs for Orders Specifying a Preferred DPM. Notwithstanding the provisions of subparagraph (b)(3) above, the Exchange may allow, on a class-by-class basis, for the receipt of marketable orders, through the Exchange's Order Routing System when the Exchange's disseminated quote is the NBBO, that carry a designation from the member transmitting the order that specifies a DPM or e-DPM in that class as the ''Preferred DPM'' for that order.

In such cases and after the provisions of subparagraph (b)(1)(i) and (iii) above have been met, then the participation entitlement applicable to the DPM Complex (as set forth in subparagraph (b)(2) above) shall be allocated to the Preferred DPM subject to the following:

(i) If the Preferred DPM is an e-DPM and the DPM is also quoting at the best bid/offer on the Exchange, then ⅓ of the participation entitlement shall be allocated to the DPM and the balance of the participation entitlement shall be allocated to the Preferred DPM;

(ii) If the Preferred DPM is the DPM and one or more e-DPMs are also quoting at the best bid/offer on the Exchange, then ⅓ of the participation entitlement shall be allocated to the e-DPMs and the balance of the participation entitlement shall be allocated to the Preferred DPM;

(iii) If the Preferred DPM is not quoting at the best bid/offer on the Exchange then the participation entitlement set forth in subparagraph (b)(3) above shall apply;

(iv) If only members of the DPM Complex are quoting at the best bid/offer on the Exchange then the participation entitlement applicable to the Preferred DPM shall be: 50% when there is one other member of the DPM Complex also quoting at the best bid/offer on the Exchange; 40% when there are two other members of the DPM Complex quoting at the best bid/offer on the Exchange; and, 30% when there are three or more members of the DPM Complex also quoting at the best bid/offer on the Exchange. The other members of the DPM Complex shall not receive a participation entitlement and the allocation procedures under Rule 6.45A shall apply; and

(v) In no case shall a DPM/e-DPM be allocated, pursuant to this participation right, a total quantity greater than the quantity that the DPM/e-DPM is quoting at the best bid/offer on the Exchange.

The Preferred DPM participation entitlement set forth in subparagraph (b)(4) of this Rule shall be in effect until [insert 1 year from SEC approval date] on a pilot basis.

* * * * *

II. Self-Regulatory Organization's Statement of the Purpose of, and Statutory Basis for, the Proposed Rule Change

In its filing with the Commission, the Exchange included statements concerning the purpose of and basis for the proposed rule change and discussed any comments it had received on the proposed rule change. The text of these statements may be examined at the places specified in Item IV below. The CBOE has prepared summaries, set forth in Sections A, B, and C below, of the most significant aspects of such statements.

A. Self-Regulatory Organization's Statement of the Purpose of, and Statutory Basis for, the Proposed Rule Change

1. Purpose

On July 12, 2004 the Commission approved a proposed rule change allowing competing remote electronic DPMs (''e-DPMs'').[3] Under these new rules, the Exchange may approve one or more e-DPMs for any option class trading on the CBOE's Hybrid System. Among other things, e-DPMs are required to meet certain quoting obligations in at least 90% of the series of each allocated class,[4] and to promote the Exchange in a manner that is likely to enhance the ability of the Exchange to compete for order flow. The Exchange has approved seven e-DPMs to date. Option classes have been allocated to these e-DPMs in a manner that has resulted in no option class having more than four e-DPMs (in addition to a floor-based DPM).

As part of SR–CBOE–2004–24, the CBOE also amended CBOE Rule 8.87 relating to the participation entitlement of DPMs to account for e-DPMs.[5] More specifically, CBOE Rule 8.87 now

[3] *See* Securities Exchange Act Release No. 50003 (July 12, 2004), 69 FR 43028 (July 19, 2004) (SR–CBOE–2004–24).

[4] Alternatively, if a Request for Quote (''RFQ'') functionality is enabled for CBOE's Hybrid System, e-DPMs could be required to respond to 98% of RFQs.

[5] DPMs and e-DPMs are only entitled to a guaranteed participation percentage if they are quoting at the best price on the Exchange. Further, the participation entitlement is based on the number of contracts remaining after public customer orders on the book have been filled.

provides that the DPM Complex (the DPM and e-DPM(s) combined) participation entitlement rate is 30% when there are three or more Market-Makers also quoting at the best price, 40% when there are two Market-Makers also quoting at the best price, and 50% when there is one Market-Maker also quoting at the best price. The rule further details the manner in which the participation entitlement is divided between members of the DPM Complex. If the DPM and one or more e-DPMs are quoting at the best price, the collective e-DPM participation entitlement shall be one-half of the total entitlement and shall be divided equally by the number of e-DPMs quoting at the best price with the remaining half allocated to the DPM. If the DPM is not quoting at the best price and one or more e-DPMs are quoting at the best price, then the e-DPMs shall be allocated the entire participation entitlement (divided equally between them). If no e-DPMs are quoting at the best price and the DPM is quoting at the best price, then the DPM shall be allocated the entire participation entitlement. Lastly, if only the DPM and/or e-DPMs are quoting at the best price (with no Market-Makers at that price), the participation entitlement shall not be applicable and the allocation procedures under CBOE Rule 6.45A shall apply. The following example illustrates the application of the current participation entitlement for e-DPMs:

Example 1. Assume the CBOE market is 1–1.15 and both sides equal the NBBO. Also assume that the DPM and three e-DPMs are part of the $1 bid along with ten Market-Makers and one customer order in the book for 10 contracts. A market order to sell 110 contracts will execute against the customer order in the book first for 10 contracts. After that, the participation right (which may or may not be used in the allocation of the order under CBOE Rule 6.45A) would be as follows: 15 contracts to the DPM and five contracts to each of the three e-DPMs.

The Exchange now seeks to modify the participation entitlement for orders designated with a Preferred DPM (the modified participation entitlement is being proposed as a one-year pilot program). Only a DPM or e-DPMs allocated a particular option class would be eligible for the ''preferred'' designation in such class, and the Preferred DPM participation entitlement (described below) would only be granted if the Preferred DPM were quoting at the best price at the time the order is received and executed electronically by the Hybrid System. Thus, the preferred entitlement will only apply to orders executed at the NBBO. The proposed participation entitlement for the Preferred DPM is as follows:

- If the Preferred DPM is an e-DPM and the DPM is also quoting at the best bid/offer on the Exchange, then ⅓ of the participation entitlement shall be allocated to the DPM and the balance of the participation entitlement shall be allocated to the Preferred DPM;
- If the Preferred DPM is the DPM and one or more e-DPMs are also quoting at the best bid/offer on the Exchange, then ⅓ of the participation entitlement shall be allocated to the e-DPMs and the balance of the participation entitlement shall be allocated to the Preferred DPM;
- If the Preferred DPM is not quoting at the best bid/offer on the Exchange then the Preferred DPM participation entitlement shall not apply and the ''regular'' participation entitlement set forth in subparagraph (b)(3) of CBOE Rule 8.87 shall apply; and,
- If only members of the DPM Complex are quoting at the best bid/offer on the Exchange then the participation entitlement applicable to the Preferred DPM shall be: 50% when there is one other member of the DPM Complex also quoting at the best bid/offer on the Exchange; 40% when there are two other members of the DPM Complex quoting at the best bid/offer on the Exchange; and, 30% when there are three or more members of the DPM Complex also quoting at the best bid/offer on the Exchange. All members of the DPM Complex other than the Preferred DPM will not receive a participation entitlement (but may participate on a trade pursuant to CBOE Rule 6.45A).

In no case shall a DPM/e-DPM be allocated a total quantity greater than the quantity that the DPM/e-DPM is quoting at the best bid/offer on the Exchange. Below are examples detailing how the proposed participation entitlement would operate:

Example 2. (With DPM as the Preferred DPM)—Assume the CBOE market is 1–1.15 and both sides equal the NBBO. Also assume that the DPM and two e-DPMs are part of the $1 bid along with ten Market-Makers and one customer order in the book for 10 contracts. A market order designating the DPM as the Preferred DPM to sell 110 contracts will execute against the customer order in the book first for 10 contracts. After that, the participation entitlement (which may or may not be used in the allocation of the order under CBOE Rule 6.45A) would be as follows: 20 contracts to the DPM and five contracts to each of the two e-DPMs.

Example 3. (With e-DPM as the Preferred DPM)—Same market as Example 2 above. A market order designating e-DPM #1 as the Preferred DPM to sell 110 contracts will execute against the customer order in the book first for 10 contracts. After that, the participation entitlement (which may or may not be used in the allocation of the order under CBOE Rule 6.45A) would be as follows: 20 contracts to e-DPM #1, 10 contracts to the DPM, and no entitlement for e-DPM #2.

Example 4. (Only members of the DPM Complex quoting at the best price)—Assume the CBOE market is 1–1.15 and both sides equal the NBBO. Also assume that the DPM and two e-DPMs are the only quoters on the $1 bid. A market order designating e-DPM #1 as the Preferred DPM to sell 100 contracts is received. The participation entitlement (which may or may not be used in the allocation of the order under CBOE Rule 6.45A) would be as follows: 40 contracts to e-DPM #1. The balance of the order would be allocated to the DPM and e-DPM #2 pursuant to CBOE Rule 6.45A.

Example 5. (Preferred DPM not quoting at best price)—Assume the CBOE market is 1–1.15 and both sides equal the NBBO. Also assume that the DPM and three e-DPMs are part of the $1 bid along with ten Market-Makers and one customer order in the book for 10 contracts. A market order designating e-DPM #4 (not part of $1 bid) as the Preferred DPM to sell 110 contracts will execute against the customer order in the book first for 10 contracts. After that, the participation entitlement (which may or may not be used in the allocation of the order under CBOE Rule 6.45A) would be as follows: 15 contracts to the DPM and 5 contracts to each of the three e-DPMs. e-DPM #4 would not participate.

There would be no requirement that orders submitted to the Exchange carry a Preferred DPM designation. Further, by requiring DPMs to quote on the NBBO in order to receive a Preferred DPM participation entitlement, the Exchange believes that the proposed rule will significantly enhance quote competition and will result in greater liquidity for customers. Lastly, by providing e-DPMs with a greater participation right in cases where orders designate them as a Preferred DPM, the CBOE believes the proposal creates incentives for e-DPMs to competitively quote and to attempt to attract order-flow to the CBOE. This benefits the Exchange and its customers by adding liquidity to the CBOE's markets.

2. Statutory Basis

The Exchange believes the proposed rule change is consistent with Section 6(b) of the Act,[6] in general, and furthers the objectives of Section 6(b)(5) of the Act,[7] in particular. By Rewarding DPMs and e-DPMs for making deep and tight markets and by enhancing their ability to compete for order flow, the Exchange believes the proposed rule change would: (i) Promote just and equitable

[6] 15 U.S.C. 78f(b).

[7] 15 U.S.C. 78f(b)(5).

principles of trade; (ii) serve to remove impediments to and perfect the mechanism of a free and open market and a national market system; and (iii) help ensure that the Exchange can attract well capitalized firms as specialists which in turn serves to protect investors and the public interest.

B. Self-Regulatory Organization's Statement on Burden on Competition

The CBOE does not believe that the proposed rule change will impose any burden on competition not necessary or appropriate in furtherance of the purposes of the Act.

C. Self-Regulatory Organization's Statement on Comments on the Proposed Rule Change Received From Members, Participants, or Others

No written comments were solicited or received with respect to the proposed rule change.

III. Date of Effectiveness of the Proposed Rule Change and Timing for Commission Action

Within 35 days of the date of publication of this notice in the **Federal Register** or within such longer period (i) as the Commission may designate up to 90 days of such date if it finds such longer period to be appropriate and publishes its reasons for so finding, or (ii) as to which the CBOE consents, the Commission will:

(A) By order approve such proposed rule change; or

(B) Institute proceedings to determine whether the proposed rule change should be disapproved.

IV. Solicitation of Comments

Interested persons are invited to submit written data, views, and arguments concerning the foregoing, including whether the proposed rule change is consistent with the Act. Comments may be submitted by any of the following methods:

Electronic Comments

- Use the Commission's Internet comment form *(http://www.sec.gov/rules/sro.shtml)*; or
- Send an e-mail to *rule-comments@sec.gov*. Please include File Number SR–CBOE–2004–71 on the subject line.

Paper Comments

- Send paper comments in triplicate to Jonathan G. Katz, Secretary, Securities and Exchange Commission, 450 Fifth Street, NW., Washington, DC 20549–0609.

All submissions should refer to File Number SR–CBOE–2004–71. This file number should be included on the subject line if e-mail is used. To help the Commission process and review your comments more efficiently, please use only one method. The Commission will post all comments on the Commission's Internet Web site *(http://www.sec.gov/rules/sro.shtml)*. Copies of the submission, all subsequent amendments, all written statements with respect to the proposed rule change that are filed with the Commission, and all written communications relating to the proposed rule change between the Commission and any person, other than those that may be withheld from the public in accordance with the provisions of 5 U.S.C. 552, will be available for inspection and copying in the Commission's Public Reference Section, 450 Fifth Street, NW., Washington, DC 20549. Copies of such filing also will be available for inspection and copying at the principal office of the CBOE. All comments received will be posted without change; the Commission does not edit personal identifying information from submissions. You should submit only information that you wish to make publicly available. All submissions should refer to File Number SR–CBOE–2004–71 and should be submitted on or before December 22, 2004.

For the Commission, by the Division of Market Regulation, pursuant to delegated authority.[8]

Margaret H. McFarland,

Deputy Secretary.

[FR Doc. E4–3406 Filed 11–30–04; 8:45 am]

BILLING CODE 8010–01–P

[8] 17 CFR 200.30–3(a)(12).

SECURITIES AND EXCHANGE COMMISSION

[Release No. 34–50725; File No. SR–CBOE–2004–25]

Self-Regulatory Organizations; Chicago Board Options Exchange, Incorporated; Order Granting Approval to Proposed Rule Change and Amendment No. 1 Relating to Designated Primary Market-Makers Obligations

November 23, 2004.

On April 23, 2004, the Chicago Board Options Exchange, Incorporated (''CBOE'' or ''Exchange'') filed with the Securities and Exchange Commission (''Commission''), pursuant to Section 19(b)(1) of the Securities Exchange Act of 1934 (''Act'')[1] and Rule 19b–4 thereunder,[2] a proposed rule change to amend its rules to clarify that CBOE Designated Primary Market Makers (''DPMs'') are required to make competitive markets on the Exchange and to otherwise promote the Exchange in a manner that is likely to enhance the ability of the Exchange to compete successfully for order flow in the classes they trade. On September 30, 2004, the CBOE filed Amendment No. 1 to the proposed rule change.[3]

The proposed rule change, as amended, was published for comment in the **Federal Register** on October 21, 2004.[4] The Commission received no comments on the amended proposal.

The Commission finds that the proposed rule change, as amended, is consistent with the requirements of the Act and the rules and regulations thereunder applicable to a national securities exchange[5] and, in particular, the requirements of Section 6 of the Act[6] and the rules and regulations thereunder. The Commission finds specifically that the proposed rule change, as amended, is consistent with Section 6(b)(5) of the Act[7] in that it is designed to promote just and equitable principles of trade, remove impediments to and perfect the mechanism of a free and open market and a national market system, and, in general, to protect investors and the public interest.

The Commission notes that the CBOE is amending the language used to describe its DPMs' current obligation under CBOE Rule 8.85(c)(ii) by using specific language that was more recently approved by the Commission to describe a similar obligation applicable to electronic DPMs (''e-DPMs'') under CBOE Rule 8.93(vi). The Commission further notes that proposed rule change, as amended, is simply making a clarifying change and will not in any way change the substance of the DPMs' current obligation. The Commission believes that the proposed rule change, as amended, will conform the language used to describe the same current DPM and e-DPM obligations, and therefore finds the proposal to be consistent with the Act.

[1] 15 U.S.C. 78s(b)(1).

[2] 17 CFR 240.19b–4.

[3] Amendment No. 1 replaced and superseded the CBOE's original 19b–4 filing in its entirety.

[4] *See* Securities Exchange Act Release No. 50548 (October 15, 2004), 69 FR 61881.

[5] In approving this proposed rule change, as amended, the Commission notes that it has considered the proposed rule's impact on efficiency, competition, and capital formation. 15 U.S.C. 78c(f).

[6] 15 U.S.C. 78f.

[7] 15 U.S.C. 78f(b)(5).

It is therefore ordered, pursuant to section 19(b)(2) of the Act,[8] that the proposed rule change (File No. SR–CBOE–2004–25), as amended, be, and it hereby is, approved.

For the Commission, by the Division of Market Regulation, pursuant to delegated authority.[9]

Margaret H. McFarland,

Deputy Secretary.

[FR Doc. E4–3407 Filed 11–30–04; 8:45 am]

BILLING CODE 8010–01–P

[8] 15 U.S.C. 78s(b)(2).

[9] 17 CFR 200.30–3(a)(12).

SECURITIES AND EXCHANGE COMMISSION

[Release No. 34–50714; File No. SR–NASD–2003–101]

Self-Regulatory Organizations; National Association of Securities Dealers, Inc.; Order Granting Approval to Proposed Rule Change, and Notice of Filing and Order Granting Accelerated Approval to Amendments No. 1 and 2 Thereto Relating to Time Limits for Submission of Claims in Arbitration

November 22, 2004.

I. Introduction

On June 19, 2003, the National Association of Securities Dealers, Inc. (''NASD'' or ''Association''), through its wholly-owned subsidiary, NASD Dispute Resolution, Inc. (''NASD Dispute Resolution''), filed with the Securities and Exchange Commission (''Commission''), pursuant to section 19(b)(1) of the Securities Exchange Act of 1934 (''Act'') [1] and Rule 19b–4 thereunder,[2] a proposed rule change to amend Rule 10304 of the NASD Code of Arbitration Procedure (''Code'') to clarify, among other effects of the rule, that arbitration eligibility determinations are made by arbitrators.

The proposed rule change was published for comment in the **Federal Register** on August 1, 2003.[3] The Commission received eight comment letters on the proposal.[4] On September 23, 2003, NASD filed a response to the comment letters received as of that date and Amendment No. 1 to the proposed rule change.[5] On February 3, 2004, NASD filed Amendment No. 2 to the proposed rule change.[6] This order approves the proposed rule change, and issues notice of and grants accelerated approval to Amendments No. 1 and No. 2.

II. Description of the Proposal

A. Text of the Proposed Rule Change

NASD proposes to amend its rules governing arbitration to clarify and limit the effect of its six-year time limitation for the submission of claims. Below is the text of the proposed rule change. Proposed new language is *italicized* and proposed deletions are in [brackets].

* * * * *

Rule 10304. Time Limitation Upon Submission.

(a) No dispute, claim, or controversy shall be eligible for submission to arbitration under this Code where six (6) years have elapsed from the occurrence or event giving rise to the act of dispute, claim, or controversy. *The panel will resolve any questions regarding the eligibility of a claim under this Rule.*

(b) *Dismissal of a claim under this Rule does not prohibit a party from pursuing the claim in court. By requesting dismissal of a claim under this Rule, the requesting party agrees that if the panel dismisses a claim under the Rule, the party that filed the dismissed claim may withdraw any remaining related claims without prejudice and may pursue all of the claims in court.*

(*c*) This Rule shall not extend applicable statutes of limitations[, nor shall it apply to any case which is directed to arbitration by a court of competent jurisdiction.] *; nor shall the six-year time limit on the submission of claims apply to any claim that is directed to arbitration by a court of competent jurisdiction upon request of a member or associated person.*

* * * * *

B. Description of the Proposed Rule Change

NASD has proposed to amend Rule 10304 of the Code to clarify certain of its effects, particularly in light of the ruling of the United States Supreme Court in *Howsam* vs. *Dean Witter Reynolds, Inc.*[7] In *Howsam*, the Court held that the issue of whether a claim is ineligible for arbitration under Rule 10304 of the Code is presumptively a matter for arbitrators to decide. Rule 10304 of the Code provides that a claim is ineligible for arbitration in the NASD forum if six or more years have elapsed from the occurrence or event giving rise to the claim. Rule 10304 of the Code, however, currently does not state expressly whether the eligibility of a claim is determined by arbitrators or by the courts. In its proposal, NASD explained that under current NASD practice, arbitrators resolve questions concerning whether a particular claim falls with the six-year time limit, but noted that the issue has generated a significant amount of collateral litigation with differing results, leading to uncertainty and confusion among forum users until the Supreme Court's decision in *Howsam*.

NASD therefore has proposed several amendments to Rule 10304 of the Code. First, NASD proposes to amend Rule 10304 of the Code to state explicitly that eligibility determinations are made by the arbitrators. Second, NASD proposes to amend the provision in the current eligibility rule to provide that the rule does not apply to claims ordered to arbitration by a court at a member's or associated person's request. Finally, NASD proposes to amend Rule 10304 of the Code to provide that by requesting dismissal of a claim on eligibility grounds in the NASD forum, the requesting party is agreeing that the party that filed the dismissed claim may withdraw all related claims without prejudice and may pursue all of the claims in court. Moreover, by a companion rule filing being approved today, Rule 10304 of the Code and all other NASD arbitration rules would be incorporated into predispute arbitration agreements governing arbitrations proceedings that take place in NASD forums.[8]

[1] 15 U.S.C. 78s(b)(1).

[2] 17 CFR 240.19b–4.

[3] *See* Release No. 34–48225 (July 7, 2002), 68 FR 45299 (August 1, 2003).

[4] *See* letters to Jonathan G. Katz, Secretary, Commission, from J. Pat Sadler, President, Public Investors Arbitration Bar Association, dated August 18, 2003 (''PIABA Letter''); Stephen G. Sneeringer, Senior Vice President and Counsel, A.G. Edwards & Sons, Inc., dated August 22, 2003 (''A.G. Edwards Letter''); Gregory M. Scanlon, Vice President & Senior Corporate Counsel, Charles Schwab & Co., Inc., dated August 26, 2003 (''Schwab Letter''); Herbert E. Pounds, Jr., Law Offices of Herbert E. Pounds, Jr., P.C., dated November 1, 2004 (''Pounds Letter''); James D. Keeney, P.A., dated November 8, 2004 (''Second Keeney Letter''); William S. Sheperd, Sheperd Smith & Edwards, L.L.P., dated November 10, 2004 (''Sheperd Letter'') Rosemary J. Shockman, President, Public Investors Arbitration Bar Association, dated November 1, 2004 (''Second PIABA Letter''); and letter from James D. Keeney, P.A., to Mr. Robert Love, Division of Market Regulation (''Division''), Commission, dated July 17, 2003 (''Keeney Letter'').

[5] *See* Letter from Laura Gansler, Counsel, NASD Dispute Resolution, Inc., to Florence Harmon, Senior Special Counsel, Division, Commission, dated September 23, 2003, available at *http://www.nasdadr.com/rule_filings_index03.asp#03–101* (''Amendment No. 1'').

[6] *See* Letter from Laura Gansler, Counsel, NASD Dispute Resolution, Inc., to Catherine McGuire, Chief Counsel, Division, Commission, dated February 3, 2004, available at *http://www.nasdadr.com/rule_filings_index03.asp#03–101* (''Amendment No. 2'').

[7] 537 U.S. 79 (Dec. 10, 2002).

[8] *See* Release No. 34–50713.

III. Summary of Comments and NASD's Response

The Commission received eight comments on the proposal.[9] PIABA generally supported the proposed rule change as ''far superior to the rule in its present form,'' although PIABA would prefer elimination of Rule 10304 of the Code.[10] PIABA suggested amending the rule, however, to provide that motions to dismiss a claim under the rule be filed within 30 days of appointment of an arbitration panels.[11] NASD responded that arbitrators, rather than the Code, should set deadlines for raising and responding to eligibility challenges on a case-by-case basis, generally in Initial Prehearing Conferences, given the varying complexity of cases.[12]

Mr. Keeney objected to the proposed rule change, arguing that the current six-year eligibility rule should be eliminated entirely, on the basis that it is ''hostile to investors.'' [13] Mr. Keeney also took issue with the proposed amendment to allow parties whose claims are dismissed under Rule 10304 of the Code to withdraw any remaining related claims and pursue them in court, claiming that this provision forces claimants to choose between bifurcating or abandoning older claims, or pursuing the entire case in court.[14] NASD responded to these concerns, disagreeing that the rule is ''hostile to investors'' and, in contrast, stated that the purpose of the rule is to provide claimants with more choices with respect to where they can pursue related claims, a result that is in the best interest of investors.[15] Finally, Mr. Keeney objected to the elimination of the provision in Rule 10304 of the Code that the rule would not apply to claims ordered to arbitration by a court, on the basis that this would allow industry parties to ''whipsaw'' claimants between court and arbitration.[16] In response, NASD is proposing to amend the exemption, rather than delete it, to provide that the six-year time limit would not apply to claims ordered to arbitration by a court at a member's or associated person's request.[17]

Schwab also opposed the proposed rule change. Schwab contended that the anti-bifurcation provision would encourage claimants intentionally to include ineligible claims in their Statement of Claim, resulting in respondents having to choose between arbitrating stale claims, or seeking dismissal of an older claim based on eligibility while having to litigate remaining claims in court.[18] NASD acknowledged that there was a theoretical potential for abuse of this provision, but responded that the benefits of eliminating the issue of claimants being forced to bifurcate claims (as under the current rule) outweighs this concern.[19] NASD also noted that the anti-bifurcation provision applies to related claims, and rejected Schwab's assertion that the term ''related claims'' should be defined in the rule, maintaining that this determination is most properly made by arbitrators on a case-by-case basis.[20] In addition, Schwab noted that Rule 10304 of the Code does not expressly state that only a respondent may request dismissal of a claim based on eligibility, leading to the possibility that a claimant could request such a dismissal to pursue related claims in court.[21] NASD responded that this is not a practical concern because the rule change is not intended to apply to parties who move to dismiss their own claims.[22]

A.G. Edwards objected to the elimination of the portion of Rule 10304(a) of the Code that states that ''This Rule shall not extend applicable statutes of limitations. * * *''[23] NASD responded by explaining that this comment resulted from a typographical error in the originally filed proposed rule change. NASD had intended to leave this phrase in Rule 10304(a) of the Code, while deleting only the text that followed: ''nor shall it apply to any case which is directed to arbitration by a court of competent jurisdiction.'' A misplaced bracket made it appear as though NASD intended to delete the entire sentence.[24] NASD has corrected this error in Amendment No. 1 and, in Amendment No. 2, further amended this provision in response to Mr. Keeney's comments, as discussed above.[25]

Mr. Pounds, while not supportive of every aspect of the rule change, urged approval of the rule as soon as possible to prevent claimants from ending up without a forum in which to bring their claims.[26] In second comment letters, Mr. Keeney and PIABA urged a prompt resolution of this rule filing.[27] Mr. Sheperd similarly urged a prompt resolution of this rule filing.[28]

IV. Discussion and Commission Findings

After careful consideration, the Commission finds that the proposed rule change, as amended, is consistent with the requirements of the Act and the rules and regulations thereunder applicable to a national securities association [29] and, in particular, the requirements of section 15A of the Act [30] and the rules and regulations thereunder. The Commission finds specifically, that the proposed rule change, as amended, is consistent with section 15A(b)(6) of the Act,[31] which requires, among other things, that the rules of an association be designed to prevent fraudulent and manipulative acts and practices, to promote just and equitable principles of trade, and, in general, to protect investors and the public interest.[32]

The Commission believes that the proposed rule is an appropriate response to the U.S. Supreme Court's holding in *Howsam* and clarifies Rule 10304 of the Code in a manner consistent with the Act. The specific amendments to Rule 10304 of the Code proposed by NASD—that questions of eligibility are to be resolved by the arbitration panel, that dismissal under the rule will not preclude later claims in court, and that respondents may not force claimants to bifurcate their claims under the rule—provide needed guidance to parties arbitrating disputes in the NASD's forum. The Commission believes that these amendments will

[9] *See* note 4, *supra*.

[10] *See* PIABA Letter.

[11] *Id*.

[12] *See* Amendment No. 1. Due to a misplaced bracket in the original filing, NASD deleted the entire last sentence of Rule 10304(a) of the Code. Rather, NASD had intended to delete only the following text: ''nor shall it apply to any case which is directed to arbitration by a court of competent jurisdiction.'' NASD corrected this typographical error in Amendment No. 1. In Amendment No. 2, this text was moved to Rule 10304(c) and further amended in response to certain comments.

[13] *See* Keeney Letter.

[14] *Id*.

[15] *See* Amendment No. 1

[16] *See* Keeney Letter.

[17] Mr. Keeney's concern also would be addressed in part by SR–NASD–98–74, approved today in Release No. 34–50713, which would amend NASD Rule 3110 so that a predispute arbitration agreement would prohibit members from seeking to compel arbitration of some but not all of a customer's court-filed claims, thus preventing members from forcing customers to litigate in two forums. NASD Rule 3110 also explicitly incorporates the rules of the arbitration forum in which the claim is filed into the predispute arbitration agreement. *See supra* n. 8.

[18] *See* Schwab Letter.

[19] *See* Amendment No. 1.

[20] *See* Amendment No. 1.

[21] *See* Schwab Letter.

[22] *See* Amendment No. 1.

[23] *See* A.G. Edwards Letter.

[24] *See* Amendment No. 1; Amendment No. 2.

[25] *ID*.

[26] *See* Pounds Letter.

[27] *See* Second Keeney Letter and Second PIABA Letter.

[28] *See* Sheperd Letter.

[29] In approving this proposed rule change, the Commission notes that it has considered the proposed rule's impact on efficiency, competition, and capital formations. 15 U.S.C. 78c(f).

[30] 15 U.S.C. 78*o*–3.

[31] 15 U.SC. 78*o*–3(b)(6).

[32] *Id*.

provide certainty, reduce the cost and delay caused by collateral litigation, and streamline the NASD arbitration process.

Further, the Commission has carefully considered the suggestions and concerns submitted by commenters and has concluded that NASD has responded appropriately to them. In response to PIABA's suggestion for a 30-day deadline to file a motion to dismiss under Rule 10304 of the Code, the Commission finds consistent with the Act the NASD's position that arbitrators, rather than the Code, should set deadlines for raising and responding to eligibility challenges on a case-by-case basis.

The Commission also finds consistent with the Act the NASD's position allowing parties whose claims are dismissed under Rule 10304 of the Code to withdraw any remaining related claims and to pursue all of the claims in court. Both Mr. Keeney and Schwab have objected to this provision of Rule 10304 of the Code for different reasons. Mr. Keeney has asserted that this provision would force claimants to choose between bifurcating or abandoning older claims, or pursuing the entire case in court. Schwab has asserted that this provision may result in respondents having to choose between arbitrating stale claims, or seeking dismissal of an older claim based on eligibility while having to litigate remaining claims in court. While claimants would have to address statute of limitations issues if their claims are ineligible for arbitration, and respondents would have to address possible bifurcation if they request dismissal under Rule 10304 of the Code, the Commission finds that Rule 10304 of the Code, as proposed, is consistent with the Act. The Commission observes that the term ''related claims'' is intended to be interpreted broadly, given the purposes of the rule and the parallel language in a companion rule filing approved today.[33]

The Commission also finds that the proposed amendment of the Rule's provision that the six year time limit does not pertain to claims ordered to arbitration by a court at a member's or associated person's request is consistent with the Act. The provision limits the potential litigation strategies that could impede the resolution of disputes and would address the concern that industry parties could force claimants to litigate in two forums. Moreover, the Commission also notes that pursuant to the companion filing approved today, the specific requirements of this and other provisions of the Code explicitly would be incorporated into the parties' predispute arbitration agreement.[34] and would be given effect under applicable law.

The Commission finds good cause for accelerating approval of Amendment Nos. 1 and 2 prior to the thirtieth day after the date of publication of notice thereof in the **Federal Register**. Amendment No. 1 merely corrects a typographical error. Amendment No. 2, as noted above, amends Rule 10304(c), so that concerns of claimants or industry parties abusing Rule 10304, as amended, are addressed appropriately. Furthermore, concurrent approval of Amendment Nos. 1 and 2 will enable NASD to announce promptly the final rules, in conjunction with those being approved today in the companion filing, which changes would incorporate Rule 10304, as amended, into any predispute arbitration agreement governing proceedings held in a NASD forum. Concurrent approval of Amendment Nos. 1 and 2 and SR–NASD–2003–101 with the companion rule filing will lessen member confusion as to the final requirements of both rule filings, allow their effective dates to be the same, and thereby permit members to make the necessary changes to comply with them in a timely fashion.[35]

V. Solicitation of Comments

Interested persons are invited to submit written data, views, and arguments concerning the foregoing, including whether the proposed rule change is consistent with the Act. Comments may be submitted by any of the following methods:

Electronic Comments

- Use the Commission's Internet comment form (*http://www.sec.gov/rules/sro.shtml*); or
- Send an e-mail to *rule-comments@sec.gov*. Please include file Number SR–NASD–2003–101 on the subject line.

Paper Comments

- Send paper comments in triplicate to Jonathan G. Katz, Secretary, Securities and Exchange Commission, 450 Fifth Street, NW., Washington, DC 20549–0609.

All submission should refer to file Number SR–NASD–2003–101. This file number should be included on the subject line if e-mail is used. To help the Commission process and review your comments more efficiently, please use only one method. The Commission will post all comments on the Commission's Internet Web site (*http://www.sec.gov/rule/sro.shtml*). Copies of the submission, all subsequent amendments, all written statements with respect to the proposed rule change that are filed with the Commission, and all written communications relating to the proposed rule change between the Commission and any person, other than those that may be withheld from the public in accordance with the provisions of 5 U.S.C. 552, will be available for inspection and copying in the Commission's Pubic Reference Section, 450 Fifth Street, NW., Washington DC 20549. Copies of such filing also will be available for inspection and copying at the principal office of the NASD. All comments received will be posted without change; the Commission does not edit personal identifying information from submissions. You should submit only information that you wish to make available publicly. All submissions should refer to File Number SR–NASD–2003–101 and should be submitted on or before December 22, 2004.

VI. Conclusion

It is therefore ordered, pursuant to section 19(b)(2) of the Act,[36] that the proposed rule change (File No. SR–NASD–2003–101) be, and it hereby is, approved and Amendment Nos. 1 and 2 are approved on an accelerated basis.

For the Commission, by the Division of Market Regulation, pursuant to delegated authority.[37]

Margaret H. McFarland,

Deputy Secretary.

[FR Doc. 04–26460 Filed 11–30–04; 8:45 am]

BILLING CODE 8010–01–M

[33] *See supra* n. 8.

[34] *Id.*

[35] The Commission further notes that both rule filings and amendments thereto have been available since their respective filing dates on *www.nasdadr.com*.

[36] 15 U.S.C. 78s(b)(2).

[37] CFR 200.30–3(a)(12).

SECURITIES AND EXCHANGE COMMISSION

[Release No. 34–50734; File No. SR–NYSE–2004–48]

Self-Regulatory Organizations; New York Stock Exchange, Inc.; Order Granting Approval to Proposed Rule Change To Create New NYSE Rule 416A (''Member and Member Organization Profile Information Updates and Quarterly Certifications Via the Electronic Filing Platform'') and To Amend NYSE Rule 476A (''Imposition of Fines for Minor Violations of Rules''), Adding New NYSE Rule 416A to the ''List of Exchange Rule Violations and Fines Applicable Thereto Pursuant to Rule 476A''

November 24, 2004.

On August 19, 2004, the New York Stock Exchange, Inc. (''NYSE'' or ''Exchange'') filed with the Securities and Exchange Commission (''Commission''), pursuant to Section 19(b)(1) of the Securities Exchange Act of 1934 (''Act'')[1] and Rule 19b–4 thereunder,[2] a proposed rule change to adopt new NYSE Rule 416A (''Member and Member organization Profile Information Updates and Quarterly Certifications Via the Electronic Filing Platform''), which rule would require members and member organizations to promptly update their organizational information via the Electronic Filing Platform, and to make quarterly certifications that their organizational information is complete and accurate. Additionally, the NYSE proposed an amendment to NYSE Rule 476A (''Imposition of Fines for Minor Violations of Rules'') to allow the Exchange to sanction members' and member organizations' minor violations of new NYSE Rule 416A pursuant to the minor fine provisions of NYSE Rule 476A. The NYSE amended the proposed rule change on October 12, 2004, which amendment completely replaced and superseded the original proposal. The proposed rule change, as amended, was published for comment in the **Federal Register** on October 25, 2004.[3] The Commission received no comments on the proposal.

The Commission finds that the proposed rule change is consistent with the requirements of the Act and the rules and regulations thereunder applicable to a national securities exchange[4] and, in particular, the requirements of Section 6 of the Act[5] and the rules and regulations thereunder. The Commission finds specifically that the proposed rule change is consistent with Section 6(b)(5) of the Act,[6] in that it is designed to promote just and equitable principles of trade, facilitate transactions in securities, remove impediments to and perfect the mechanism of a free and open market and a national market system, and, in general, to protect investors and the public interest. The Commission also finds that the proposal is consistent with Section 6(b)(6) of the Act,[7] which requires that members and persons associated with members be appropriately disciplined for violations of Exchange rules. Finally, the Commission finds the proposal is consistent with Rule 19d–1(c)(2) under the Act,[8] which governs minor rule violation plans.

It is therefore ordered, pursuant to Section 19(b)(2) of the Act,[9] that the proposed rule change (SR–NYSE–2004–48), as amended, be, and it hereby is, approved.

For the Commission, by the Division of Market Regulation, pursuant to delegated authority.[10]

Margaret H. McFarland,

Deputy Secretary.

[FR Doc. E4–3402 Filed 11–30–04; 8:45 am]

BILLING CODE 8010–01–P

[1] 15 U.S.C. 78s(b)(1).

[2] 17 CFR 240.19b–4.

[3] *See* Securities Exchange Act Release No. 50559 (October 19, 2004), 69 FR 62314.

[4] In approving this proposed rule change, the Commission has considered the proposed rule's impact on efficiency, competition, and capital formation. 15 U.S.C. 78c(f).

[5] 15 U.S.C. 78f.

[6] 15 U.S.C. 78f(b)(5).

[7] 15 U.S.C. 78f(b)(6).

[8] 17 CFR 240.19d–1(c)(2).

[9] 15 U.S.C. 78s(b)(2).

[10] 17 CFR 200.30–3(a)(12).

SECURITIES AND EXCHANGE COMMISSION

[Release No. 34–50727; File No. SR–Phlx–2004–66]

Self-Regulatory Organizations; Philadelphia Stock Exchange, Inc.; Notice of Filing of Proposed Rule Change Relating to Concentration Limit Listing Standards in Phlx Rule 1009A

November 23, 2004.

Pursuant to section 19(b)(1) of the Securities Exchange Act of 1934 (''Act'')[1], and Rule 19b–4 thereunder,[2] notice is hereby given that on October 7, 2004, the Philadelphia Stock Exchange, Inc. (''Phlx'' or ''Exchange'') filed with the Securities and Exchange Commission (''Commission'') the proposed rule change as described in items I, II, and III below, which items have been prepared by the Phlx. On October 25, 2004, the Exchange filed Amendment No. 1 to the proposed rule change.[3] The Commission is publishing this notice to solicit comments on the proposed rule change, as amended, from interested persons.

I. Self-Regulatory Organization's Statement of the Terms of Substance of the Proposed Rule Change

The Exchange proposes to amend Phlx Rule 1009A, Designation of the Index, which applies to the listing of index options. Specifically, the Exchange proposes to increase certain concentration limit listing standards set forth in Phlx Rule 1009A(b) pursuant to which the Exchange may list certain narrow-based index options pursuant to Commission Rule 19b–4(e).[4] The text of the proposed rule change is set forth below. Proposed new language is *italicized*; proposed deletions are [in brackets].

Rule 1009A

(a) No Change.

(b) Notwithstanding paragraph (a) above, the Exchange may trade options on a narrow-based index pursuant to Rule 19b–4(e) of the Exchange Act, if each of the following conditions is satisfied:

(1)–(5) No Change.

(6) No single component security represents more than [25%] *30%* of the weight of the index, and the five highest weighted component securities in the index do not in the aggregate account for more than 50% ([60%] *65%* for an index consisting of fewer than 25 component securities) of the weight of the index;

(i) With respect to the Gold/Silver Index, no single component shall account for more than 35% of the weight of the Index and the three highest weighted components shall not account for more than 65% of the weight of the Index. If the Index fails to meet this requirement, the Exchange shall reduce position limits to 8000 contracts on the Monday following expiration of the farthest-out, then trading, non-LEAP series.

(7)–(12) No Change.

[3] *See* letter from Carla Behnfeldt, Director, Legal Department New Product Development Group, Phlx to Nancy Sanow, Assistant Director, Division of Market Regulation (''Division''), Commission, dated October 22, 2004 (''Amendment No. 1''), in which the Phlx provided rationale for and requested accelerated approval of the proposed rule change.

[4] 17 CFR 240.19b–4(e).

II. Self-Regulatory Organization's Statement of the Purpose of, and Statutory Basis for, the Proposed Rule Change

In its filing with the Commission, as amended, the Phlx included statements concerning the purpose of, and basis for, the proposed rule change and discussed any comments it received on the proposed rule change. The text of these statements may be examined at the places specified in Item IV below. The Phlx has prepared summaries, set forth in sections A, B, and C below, of the most significant aspects of such statements.

A. Self-Regulatory Organization's Statement of the Purpose of, and Statutory Basis for, the Proposed Rule Change

1. Purpose

The purpose of the proposed rule change is to increase certain concentration limit listing standards in Phlx Rule 1009A. On December 6, 2000, the Commission approved a Phlx proposed rule change adopting Phlx Rule 1009A(b) [5] that provides generic listing standards for the listing and trading of narrow-based index options in accordance with the Commission's New Product Release.[6] Under Phlx Rule 1009A(b) the Exchange may trade options on a narrow-based index without filing a proposed rule change under Section 19(b)(2) of the Act if certain conditions are satisfied.[7] One of these conditions is set forth in Phlx Rule 1009A(b)(6), which prescribes certain concentration limits applicable to the most highly weighted component of the index and to the top five most highly weighted components combined. Specifically, the rule currently requires that no single component security represents more than 25% of the weight of the index, and that the five highest weighted component securities in the index do not in the aggregate account for more than 50% (60% for an index consisting of fewer than 25 component securities) of the weight of the index. The Exchange is now proposing to amend Phlx Rule 1009A(b)(6) by increasing the 25% concentration limit for the highest weighted component stock to 30%. The amendment would also increase the 60% concentration limit for the five mostly highly weighted stocks in an index consisting of fewer than 25 component securities from 60% to 65%.

The proposed rule change would result in increased flexibility in the Exchange's ability to list narrow-based index options. The proposal will also reduce the instances in which the addition of new series is restricted pursuant to Phlx Rule 1009A(c), the maintenance listing standards applicable to options listed under Phlx Rule 1009A(b), because changes in the market value of underlying index components has caused them to exceed the current 25% or 60% limits by a very slight amount as has occasionally occurred in the past. The Exchange believes that these changes are appropriate because they are minor in nature, such that the concentration limit listing standards will continue to serve the purpose for which they were originally intended of not permitting a single security or small number of securities to dominate the index.

2. Statutory Basis

The Exchange believes that its proposal is consistent with Section 6(b) of the Act [8] in general, and furthers the objectives of Section 6(b)(5) of the Act[9] in particular, in that it should increase the availability for listing of narrow-based index options, thus enhancing the number of investment choices for investors.

B. Self-Regulatory Organization's Statement on Burden on Competition

The Exchange does not believe that the proposed rule change will impose any inappropriate burden on competition.

C. Self-Regulatory Organization's Statement on Comments on the Proposed Rule Change Received From Members, Participants, or Others

No written comments were either solicited or received.

III. Date of Effectiveness of the Proposed Rule Change and Timing for Commission Action

Within 35 days of the date of publication of this notice in the **Federal Register** or within such longer period (i) as the Commission may designate up to 90 days of such date if it finds such longer period to be appropriate and publishes its reasons for so finding, or (ii) as to which the self-regulatory organization consents, the Commission will:

(A) By order approve such proposed rule change; or

(B) Institute proceedings to determine whether the proposed rule change should be disapproved.

IV. Solicitation of Comments

Interested persons are invited to submit written data, views, and arguments concerning the foregoing, including whether the proposed rule change, as amended, is consistent with the Act. Comments may be submitted by any of the following methods:

Electronic Comments

- Use the Commission's Internet comment form *(http://www.sec.gov/rules/sro.shtml)*; or
- Send an e-mail to *rule-comments@sec.gov*. Please include File Number SR–Phlx–2004–66 on the subject line.

Paper Comments

- Send paper comments in triplicate to Jonathan G. Katz, Secretary, Securities and Exchange Commission, 450 Fifth Street, NW., Washington, DC 20549–0609.

All submissions should refer to File Number SR–Phlx–2004–66. This file number should be included on the subject line if e-mail is used. To help the Commission process and review your comments more efficiently, please use only one method. The Commission will post all comments on the Commission's Internet Web site *(http://www.sec.gov/rules/sro.shtml)*. Copies of the submission, all subsequent amendments, all written statements with respect to the proposed rule change that are filed with the Commission, and all written communications relating to the proposed rule change between the Commission and any person, other than those that may be withheld from the public in accordance with the provisions of 5 U.S.C. 552, will be available for inspection and copying in the Commission's Public Reference Room. Copies of the filing also will be available for inspection and copying at the principal office of the Phlx. All comments received will be posted without change; the Commission does not edit personal identifying information from submissions. You should submit only information that you wish to make available publicly. All submissions should refer to File Number SR–Phlx–2004–66 and should

[5] *See* Securities Exchange Act Release No. 43683 (December 6, 2000), 65 FR 78235 (December 14, 2000).

[6] *See* Securities Exchange Act Release No. 40761 (December 8, 1998), 63 FR 70952 (December 22, 1998) (''New Product Release'').

[7] The Commission approved an amendment to Phlx Rule 1009A to provide that certain narrow-based index options that meet generic listing standards may be listed and traded on the Exchange without a filing pursuant to Rule 19b–4(e) under the Act. *See* Securities Exchange Act Release No. 43683 (December 6, 2000), 65 FR 78235 (December 14, 2000) (SR–Phlx–2000–67).

[8] 15 U.S.C. 78f(b).

[9] 15 U.S.C. 78f(b)(5).

be submitted on or before December 22, 2004.

For the Commission, by the Division of Market Regulation, pursuant to delegated authority.[10]

Margaret H. McFarland,

Deputy Secretary.

[FR Doc. E4–3409 Filed 11–30–04; 8:45 am]

BILLING CODE 8010–01–P

SECURITIES AND EXCHANGE COMMISSION

[Release No. 34–50722; File No. SR–Phlx–2004–72]

Self-Regulatory Organizations; Notice of Filing and Immediate Effectiveness of a Proposed Rule Change by the Philadelphia Stock Exchange, Inc. Relating to its Equity Options Payment for Order Flow Program

November 23, 2004

Pursuant to section 19(b)(1) of the Securities Exchange Act of 1934 (''Act'')[1] and Rule 19b–4 thereunder,[2] notice is hereby given that on November 1, 2004, the Philadelphia Stock Exchange, Inc. (''Phlx'' or ''Exchange'') filed with the Securities and Exchange Commission (''Commission'') the proposed rule change as described in items I, II, and III below, which items have been prepared by the Exchange. The Phlx has designated this proposal as one changing a fee imposed by the Phlx under section 19(b)(3)(A)(ii) of the Act[3] and Rule 19b–4(f)(2) thereunder,[4] which renders the proposal effective upon filing with the Commission. The Commission is publishing this notice to solicit comments on the proposed rule change from interested persons.

I. Self-Regulatory Organization's Statement of the Terms of Substance of the Proposed Rule Change

The Phlx proposes to revise its equity options payment for order flow program that is scheduled to be in effect beginning with trades settling on or after November 1, 2004 (''November Program''),[5] to credit Registered Options Traders (''ROTs'') for payment for order flow fees assessed for trades settling November 1, 2004, through November 12, 2004, in options ranked greater than the top 150 options.[6] The Exchange states that ROTs would not be assessed payment for order flow fees for the specified time period in those options, because the Exchange proposes to charge the fee and then credit the same amount. If a specialist unit who has elected to participate in the November Program requests reimbursement for payment for order flow funds expended in connection with any options ranked greater than the top 150 options, the Exchange itself would fund and distribute for this time period to the requesting specialist units the amount that otherwise should have been collected from ROTs.

Background

Pursuant to the November Program, the Exchange will assess a payment for order flow fee of $0.40 on all equity options, except: (1) Options on the iShares FTSE/Xinhua China 25 Index Fund (''FXI Options''),[7] an exchange-traded fund, which will not be assessed an equity options payment for order flow fee; and (2) options on the Nasdaq-100 Index Tracking Stock℠ traded under the symbol QQQ,[8] which will continue to be assessed $1.00 per contract. In addition, pursuant to the November Program, any excess payment for order flow funds billed but not requested to be used for reimbursement by the options specialist unit[9] will be rebated to the ROTs, which will appear as a credit on the same payment for order flow invoice that reflects the payment for order flow fees to be assessed for that month.[10]

Proposal

The Exchange proposes to amend the November Program in one respect—to credit ROTs for payment for order flow fees assessed for trades settling November 1, 2004 through November 12, 2004 in options ranked greater than the top 150 options.[11] The Exchange states that this change is intended to allow ROTs additional time to close out existing positions in options ranked greater than the top 150 options in the event that a ROT no longer wishes to trade an option that becomes subject to the payment for order flow fee under the November Program. The Exchange believes that, going forward, some ROTs may wish to trade in a trading crowd where the specialist unit has elected not to participate in the Exchange's payment for order flow program. Nevertheless, a ROT may have an existing position in that option (for instance, own or be short calls or puts), and the Exchange has determined that it would be appropriate in such cases to provide additional time for ROTs to close those positions before the November Program takes full effect.

If a specialist unit who has elected to participate in the November Program[12]

[10] 17 CFR 200.30–3(a)(12).

[1] 15 U.S.C. 78s(b)(1).

[2] 17 CFR 240.19b–4.

[3] 15 U.S.C. 78s(b)(3)(A)(ii).

[4] 17 CFR 240.19b–4(f)(2).

[5] *See* SR–Phlx–2004–68 (October 29, 2004).

[6] The top 150 options are calculated based on the most actively traded equity options in terms of the total number of contracts that are traded nationally based on volume statistics provided by The Options Clearing Corporation (''OCC'') and that are also traded on the Exchange. For example, if two of the most actively traded equity options, based on volume statistics provided by the OCC, are not traded on the Exchange, then the next two most actively traded equity options that are traded on the Exchange will be selected. (For example, if the list of the top 150 options includes two options that are not traded on the Exchange, then the options ranked 151 and 152 will be included in the Exchange's top 150, assuming those options are traded on the Exchange.)

[7] On October 19, 2004, the Exchange began listing FXI Options, a product that is an equity option, but which is assessed fees pursuant to the Exchange's Summary of Index Option and FXI Options Charges. *See* SR–Phlx–2004–67.

[8] QQQ is currently the most actively-traded equity option. The Nasdaq-100®, Nasdaq-100 Index®, Nasdaq®, The Nasdaq Stock Market®, Nasdaq-100 Shares℠, Nasdaq-100 Trust℠, Nasdaq-100 Index Tracking Stock℠, and QQQ℠ are trademarks or service marks of The Nasdaq Stock Market, Inc. (''Nasdaq'') and have been licensed for use for certain purposes by the Phlx pursuant to a License Agreement with Nasdaq. The Nasdaq-100 Index®; (''Index'') is determined, composed, and calculated by Nasdaq without regard to the Licensee, the Nasdaq-100 Trust℠, or the beneficial owners of Nasdaq-100 Shares℠. Nasdaq has complete control and sole discretion in determining, comprising, or calculating the Index or in modifying in any way its method for determining, comprising, or calculating the Index in the future.

[9] The Exchange uses the terms ''specialist'' and ''specialist unit'' interchangeably herein.

[10] The payment for order flow fee is billed and collected on a monthly basis. Because the specialists are not being charged the payment for order flow fee for their own transactions, they may not request reimbursement in connection with any transactions to which they were a party. *See* SR–Phlx–2004–68 for additional information regarding the Exchange's November Program.

[11] The Exchange will note on its fee schedule that ROTs will be billed and credited payment for order flow fees (on the same invoice) for the period November 1, 2004 through November 12, 2004 for transactions in equity options ranked greater than the top 150 options and in which the specialist unit has elected to participate in the Exchange's November Program. The Exchange will delete the reference to this ''credit'' from its fee schedule after the specified time period has expired pursuant to this proposed rule change.

[12] Specialist units elect to participate or not to participate in the program in all options in which they are acting as a specialist by notifying the Exchange in writing no later than five business days prior to the start of the month. If electing not to participate in the program, the specialist unit waives its right to any reimbursement of payment for order flow funds for the month(s) during which it elected to opt out of the program. Payment for order flow charges will apply to ROTs as long as the specialist unit for that option has elected to participate in the Exchange's payment for order flow program. Once a specialist unit has either elected to participate or not to participate in the Exchange's payment for order flow program in a particular month, it is not required to notify the Exchange in a subsequent month if it does not intend to change its participation status. *See* Securities Exchange Act Release Nos. 50471 (September 29, 2004), 69 FR 59636 (October 5, 2004) (SR–Phlx–2004–60) and 50572 (October 20, 2004), 69 FR 62735 (October 27, 2004) (SR–Phlx–2004–61) and SR–Phlx–2004–68.

requests reimbursement for payment for order flow funds expended in connection with any options ranked greater than 150 respecting this time period, the Exchange would fund and distribute that requested amount to the specialist unit.[13] In effect, the Exchange would be satisfying the specialists' reimbursement request by paying from its funds the amount, or portion thereof, that should have been billed to and collected from ROTs.

This proposal only applies to equity options ranked greater than the top 150 options that are subject to the November Program (*i.e.*, only where a specialist unit has elected to participate in the November Program). Thus, payment for order flow fees would continue to be assessed, and not credited to ROTs, on options ranked 1 through 150 pursuant to the November Program.

Specialists request payment for order flow reimbursements on an option-by-option basis. The collected funds are used by each specialist unit to reimburse it for monies expended to attract options orders to the Exchange by making payments to order flow providers who provide order flow to the Exchange. The Phlx states that specialists receive their respective funds only after submitting an Exchange certification form identifying the amount of the requested funds.[14] Each specialist unit establishes the amounts that would be paid to order flow providers. Although the Exchange would, in effect, be paying the amount of payment for order flow funds that should have been collected from ROTs to the requesting specialist units, the Exchange states that it does so only to preserve the balance between allowing more time for ROTs to close positions while recognizing that specialist units may have relied on receiving these funds when making their equity options payment for order flow arrangements.

The Phlx states that the issue of using Exchange fees to fund order flow payments to options order flow providers has been a topic of great concern at the Exchange. From the onset, the Exchange states that it has been, and continues to be, a vocal opponent to any payment for order flow programs. The Exchange, however, believes that, in this limited situation, paying for order flow is necessary in order to maintain its commitment to the specialist units who may have relied on its intention to implement a broader program, which was to become effective for trades settling on or after November 1, 2004.

Below is the text of the proposed rule change. Proposed new language is in *italics.*

* * * * *

SUMMARY OF EQUITY OPTION CHARGES (p. 3/3)

EQUITY OPTION PAYMENT FOR ORDER FLOW FEES *

Registered Option Trader (on-floor) ** +

QQQ (NASDAQ–100 Index Tracking Stock SM)—$1.00 per contract

Remaining Equity Options, except FXI Options—$0.40 per contract ***

* Assessed on transactions resulting from customer orders, subject to a 500-contract cap, per individual cleared side of a transaction.

** Any excess payment for order flow funds billed but not reimbursed to specialists will be returned to the applicable ROTs (reflected as a credit on the monthly invoices) and distributed on a pro rata basis.

*** *ROTs will be billed and credited payment for order flow fees (on the same invoice) for the period November 1, 2004 through November 12, 2004 for transactions in equity options ranked greater than 150 and in which the specialist unit has elected to participate in the Exchange's November Program.*

\+ Only incurred when the specialist elects to participate in the payment for order flow program.

II. Self-Regulatory Organization's Statement of the Purpose of, and Statutory Basis for, the Proposed Rule Change

In its filing with the Commission, the Phlx included statements concerning the purpose of and basis for the proposed rule change and discussed any comments it received on the proposed rule change. The text of these statements may be examined at the places specified in item IV below. The Phlx has prepared summaries, set forth in sections A, B, and C below, of the most significant aspects of such statements.

A. Self-Regulatory Organization's Statement of the Purpose of, and Statutory Basis for, the Proposed Rule Change

1. Purpose

The Phlx states that the purpose of the proposed rule change is to maintain a more competitive equity options payment for order flow program. Payment for order flow programs are in place at each of the other options exchanges in varying amounts and covering various options. According to the Phlx, the revenue generated by the $1.00 or $0.40 payment for order flow fees, as outlined in this proposal, is intended to be used by specialist units to compete for order flow in equity options listed for trading on the Exchange. The Exchange believes that, in today's competitive environment, maintaining a payment for order flow program is necessary to continue to compete more directly with other options exchanges.

2. Basis

The Exchange believes that its proposal to amend its schedule of dues, fees, and charges is consistent with section 6(b) of the Act[15] in general, and furthers the objectives of section 6(b)(4) of the Act[16] in particular, in that it is an equitable allocation of reasonable fees among Phlx members and that it is designed to enable the Exchange to compete with other markets in attracting customer order flow. The Phlx believes that the proposed payment for order flow fees would serve to maintain the competitiveness of the Phlx and its members and that this proposal therefore is consistent with and furthers the objectives of the Act, including section 6(b)(5) thereof,[17] which requires the rules of exchanges to be designed to promote just and equitable principles of trade, remove impediments to and perfect the mechanism of a free and open market and a national market system. Attracting more order flow to the Exchange, should, in turn, result in increased liquidity, tighter markets and more competition among Exchange members.

B. Self-Regulatory Organization's Statement on Burden on Competition

The Exchange does not believe that the proposed rule change will impose any inappropriate burden on competition.

[13] If a specialist unit elects not to participate in the program, the specialist unit waives its right to any reimbursement of payment for order flow funds for the month(s) during which it elected to opt out of the program.

[14] While all determinations concerning the amount that will be paid for orders and which order flow providers shall receive these payments are made by the specialists, the specialists will provide to the Exchange on an Exchange form certain information, including what firms they paid for order flow, the amount of the payment and the price paid per contract. The purpose of the form, in part, is to assist the Exchange in determining the effectiveness of the proposed fee and to account for and track the funds transferred to specialists, consistent with normal bookkeeping and auditing practices. In addition, certain administrative duties will be provided by the Exchange to assist the specialists.

[15] 15 U.S.C. 78f(b).

[16] 15 U.S.C. 78f(b)(4).

[17] 15 U.S.C. 78f(b)(5).

C. Self-Regulatory Organization's Statement on Comments on the Proposed Rule Change Received From Members, Participants, or Others

No written comments were either solicited or received.

III. Date of Effectiveness of the Proposed Rule Change and Timing for Commission Action

The foregoing proposed rule change has been designated as a fee change pursuant to section 19(b)(3)(A)(ii) of the Act [18] and Rule 19b–4(f)(2) [19] thereunder, because it establishes or changes a due, fee, or other charge imposed by the Exchange. Accordingly, the proposal will take effect upon filing with the Commission. At any time within 60 days of the filing of such proposed rule change, the Commission may summarily abrogate such rule change if it appears to the Commission that such action is necessary or appropriate in the public interest, for the protection of investors, or otherwise in furtherance of the purposes of the Act.

IV. Solicitation of Comments

Interested persons are invited to submit written data, views, and arguments concerning the foregoing, including whether the proposed rule change is consistent with the Act. Comments may be submitted by any of the following methods:

Electronic Comments

- Use the Commission's Internet comment form (*http://www.sec.gov/rules/sro.shtml*); or
- Send an e-mail to *rule-comments@sec.gov*. Please include File Number SR–Phlx–2004–72 on the subject line.

Paper Comments

- Send paper comments in triplicate to Jonathan G. Katz, Secretary, Securities and Exchange Commission, 450 Fifth Street, NW., Washington, DC 20549–0609.

All submissions should refer to File Number SR–Phlx–2004–72. This file number should be included on the subject line if e-mail is used. To help the Commission process and review your comments more efficiently, please use only one method. The Commission will post all comments on the Commission's Internet Web site (*http://www.sec.gov/rules/sro.shtml*). Copies of the submission, all subsequent amendments, all written statements with respect to the proposed rule change that are filed with the Commission, and all written communications relating to the proposed rule change between the Commission and any person, other than those that may be withheld from the public in accordance with the provisions of 5 U.S.C. 552, will be available for inspection and copying in the Commission's Public Reference Room. Copies of such filing also will be available for inspection and copying at the principal office of the Phlx. All comments received will be posted without change; the Commission does not edit personal identifying information from submissions. You should submit only information that you wish to make available publicly. All submissions should refer to File Number SR–Phlx–2004–72 and should be submitted on or before December 22, 2004.

For the Commission, by the Division of Market Regulation, pursuant to delegated authority.[20]

Margaret H. McFarland,

Deputy Secretary.

[FR Doc. E4–3410 Filed 11–30–04; 8:45 am]

BILLING CODE 8010–01–P

[18] 15 U.S.C. 78s(b)(3)(A)(ii).

[19] 17 CFR 240.19b–4(f)(2).

[20] 17 CFR 200.30–3(a)(12).

SECURITIES AND EXCHANGE COMMISSION

[Release No. 34–50723; File No. SR–Phlx–2004–68]

Self-Regulatory Organizations; Notice of Filing and Immediate Effectiveness of Proposed Rule Change by the Philadelphia Stock Exchange, Inc. Relating to Its Equity Options Payment for Order Flow Program

November 23, 2004.

Pursuant to section 19(b)(1) of the Securities Exchange Act of 1934 (''Act'') [1] and Rule 19b–4 thereunder,[2] notice is hereby given that on October 29, 2004, the Philadelphia Stock Exchange, Inc. (''Phlx'' or ''Exchange'') filed with the Securities and Exchange Commission (''Commission'') the proposed rule change as described in items I, II, and III below, which items have been prepared by the Exchange. The Phlx has designated this proposal as one changing a fee imposed by the Phlx under section 19(b)(3)(A)(ii) of the Act [3] and Rule 19b–4(f)(2) thereunder,[4] which renders the proposal effective upon filing with the Commission. The Commission is publishing this notice to solicit comments on the proposed rule change from interested persons.

I. Self-Regulatory Organization's Statement of the Terms of Substance of the Proposed Rule Change

The Phlx proposes to revise its equity options payment for order flow program by: (1) Imposing a payment for order flow fee of $0.40 on all equity options traded on the Phlx, other than options on the Nasdaq-100 Index Tracking Stock SM traded under the symbol QQQ (''QQQ''), currently the most actively traded equity option, and options on the iShares FTSE/Xinhua China Index Fund (''FXI Options''), an exchange-traded fund; (2) returning to the Registered Options Traders (''ROTs''), by option, any excess equity options payment for order flow funds billed to those ROTs but not reimbursed to specialist units; [5] (3) clarifying the assessment of the payment for order flow fee when an equity option is reallocated mid-month; and (4) making other corresponding changes to the Exchange's equity options payment for order flow program, which occur as a result of the above-referenced proposal.

Equity Options Payment for Order Flow Program in Effect Prior to November 1, 2004

The Exchange recently amended its payment for order flow program.[6] Pursuant to the September/October Program, the Exchange assessed a payment for order flow fee as follows when ROTs trade against a customer order: (1) $1.00 per contract for options on the QQQ, currently the most actively traded equity option; [7] and (2) $0.40 per contract for the remaining top 150 equity options, other than the QQQs.[8]

[1] 15 U.S.C. 78s(b)(1).

[2] 17 CFR 240.19b–4.

[3] 15 U.S.C. 78s(b)(3)(A)(ii).

[4] 17 CFR 240.19b–4(f)(2).

[5] The Exchange uses the terms ''specialist'' and ''specialist unit'' interchangeably herein.

[6] *See* Securities Exchange Act Release Nos. 50471 (September 29, 2004), 69 FR 59636 (October 5, 2004) (SR–Phlx–2004–60) and 50572 (October 20, 2004), 69 FR 62735 (October 27, 2004) (SR–Phlx–2004–61) (collectively, ''September/October Program'').

[7] The Nasdaq-100®, Nasdaq-100 Index®, Nasdaq®, The Nasdaq Stock Market®, Nasdaq-100 Shares SM, Nasdaq-100 Trust SM, Nasdaq-100 Index Tracking Stock SM, and QQQ SM are trademarks or service marks of The Nasdaq Stock Market, Inc. (''Nasdaq'') and have been licensed for use for certain purposes by the Phlx pursuant to a License Agreement with Nasdaq. The Nasdaq-100 Index® (''Index'') is determined, composed, and calculated by Nasdaq without regard to the Licensee, the Nasdaq-100 Trust SM, or the beneficial owners of Nasdaq-100 Shares SM. Nasdaq has complete control and sole discretion in determining, comprising, or calculating the Index or in modifying in any way its method for determining, comprising, or calculating the Index in the future.

[8] The top 150 options are calculated based on the most actively traded equity options in terms of the total number of contracts that are traded nationally based on volume statistics provided by The Options

The payment for order flow fee applies, in effect, to equity option transactions between a ROT and a customer.[9] In addition, a 500 contract cap per individual cleared side of a transaction is imposed.[10]

Specialist units elect to participate or not to participate in the program in all options in which they are acting as a specialist by notifying the Exchange in writing no later than five business days prior to the start of the month.[11] If a specialist unit elects not to participate in the program, the specialist unit waives its right to any reimbursement of payment for order flow funds for the month(s) during which it elected to opt out of the program.[12] Specialists request payment for order flow reimbursements on an option-by-option basis. The collected funds are used by each specialist unit to reimburse it for monies expended to attract options orders to the Exchange by making payments to firms that provide order flow to the Exchange. Specialists receive their respective funds only after submitting an Exchange certification form identifying the amount of the requested funds.[13] Each specialist unit establishes the amounts that would be paid to order flow providers.

Pursuant to the Exchange's September/October Program, any excess payment for order flow funds are carried forward to the next month by option and may not be applied retroactively to past deficits, which may be incurred when the specialist requests more than the amount collected.[14] Thus, excess funds are not rebated to ROTs except in the limited situation discussed below, nor are deficits carried forward to subsequent months. ROTs may, however, receive a rebate of excess funds in a particular option for a particular month if the specialist unit did not request reimbursement by option of at least 50% of the total amount of payment for order flow funds billed to and collected from ROTs for each option in which that specialist unit was acting as specialist, as more fully described below.

Specialists units may opt out entirely from the program as long as they notify the Exchange in writing by the 15th of the month, or the next business day if the 15th of the month is not a business day. If a specialist unit opts out of the program by the 15th of the month, no payment for order flow charges would be incurred for either the specialist unit or ROTs for transactions in the affected options for that month.

In addition to opting out entirely from the program, specialists may opt out of the program on an option-by-option basis if they notify the Exchange in writing no later than three business days after the end of the month (which is before the payment for order flow fee is billed). If a specialist unit opts out of an option at the end of the month, no payment for order flow fees are assessed on the applicable ROT(s) for that option. If a specialist unit opts out of the program in a particular option more than two times in a six-month period, it would be precluded from entering into the payment for order flow program for that option for the next three months.

If a specialist unit opts into the program (and does not opt out of the program entirely by the 15th day of the month or by option by the third business day after the end of the month) and does not request reimbursement by option of at least 50% of the total amount of payment for order flow funds billed to and collected from ROTs for each option in which that specialist unit is acting as the specialist, then any excess payment for order flow funds remaining after the specialist has been reimbursed would be rebated, on a pro rata basis, to the affected ROTs for those particular options in which the 50% threshold was not met.[15]

The payment for order flow fee is billed and collected on a monthly basis. Because the specialists are not being charged the equity options payment for order flow fee for their own transactions, they may not request reimbursement for order flow funds in connection with any transactions to which they were a party.[16]

Clearing Corporation (''OCC'') and that are also traded on the Exchange. For example, if two of the most actively traded equity options, based on volume statistics provided by the OCC, are not traded on the Exchange, then the next two most actively traded equity options that are traded on the Exchange will be selected. (For example, if the list of the top 150 options includes two options that are not traded on the Exchange, then the options ranked 151 and 152 will be included in the Exchange's top 150, assuming those options are traded on the Exchange).

[9] Thus, the ROT payment for order flow fee is not assessed on transactions between: (1) A specialist and a ROT; (2) a ROT and a ROT; (3) a ROT and a firm; and (4) a ROT and a broker-dealer. The ROT payment for order flow fee does not apply to index options or foreign currency options. Accordingly, the ROT payment for order flow fees applies, in effect, to equity option transactions between a ROT and a customer.

[10] Thus, the applicable payment for order flow fee is imposed only on the first 500 contracts, per individual cleared side of a transaction. For example, if a transaction consists of 750 contracts by one ROT, the applicable payment for order flow fee would be applied to, and capped at, 500 contracts for that transaction. Also, if a transaction consists of 600 contracts, but is equally divided among three ROTs, the 500 contract cap would not apply to any such ROT and each ROT would be assessed the applicable payment for order flow fee on 200 contracts, as the payment for order flow fee is assessed on a per ROT, per transaction basis. *See* Securities Exchange Act Release Nos. 47958 (May 30, 2003), 68 FR 34026 (June 6, 2003) (proposing SR–Phlx–2002–87); 48166 (July 11, 2003), 68 FR 42450 (July 17, 2003) (approving SR–Phlx–2002–87); and 50471 (September 29, 2004), 69 FR 59636 (October 5, 2004) (SR–Phlx–2004–60).

[11] A specialist unit must notify the Exchange in writing to either elect to participate or not to participate in the program. Once a specialist unit has either elected to participate or not to participate in the Exchange's payment for order flow program in a particular month, it is not required to notify the Exchange in a subsequent month if it does not intend to change its participation status. For example, if a specialist unit elected to participate in the program and provided the Exchange with the appropriate notice, that specialist unit would not be required to notify the Exchange in the subsequent month(s) if it intends to continue to participate in the program. However, if it elects not to participate (a change from its current status), it would need to notify the Exchange in accordance with the requirements stated above.

[12] For any month (or part of a month where an option is allocated mid-month) the specialist unit has elected to opt out of the program, no ROT equity options payment for order flow fee will apply.

[13] While all determinations concerning the amount that will be paid for orders and which order flow providers shall receive these payments are made by the specialists, the specialists will provide to the Exchange on an Exchange form certain information, including what firms they paid for order flow, the amount of the payment and the price paid per contract. The purpose of the form, in part, is to assist the Exchange in determining the effectiveness of the proposed fee and to account for and track the funds transferred to specialists, consistent with normal bookkeeping and auditing practices. In addition, certain administrative duties will be provided by the Exchange to assist the specialists.

[14] Specialists may not receive more than the payment for order flow amount billed and collected in a given month; however, the amount specialists receive may include excesses, if any, for that option, carried forward from prior months, up to the payment for order flow amount billed and collected in such month.

[15] For example, if a specialist unit requests $10,000 in reimbursement for one option and the total amount billed and collected from the ROTs was $30,000, then the specialist unit did not satisfy the 50% threshold, given the fact that it did not request reimbursement of at least $15,000. Therefore, the remaining amount of $20,000 will be rebated to the ROTs on a pro rata basis. If ROT A was assessed $15,000 in payment for order flow fees, it would receive a rebate of $10,000 ($15,000/$30,000 = 50%, and 50% of $20,000 is $10,000). If ROT B was assessed $8,000 in payment for order flow fees, it would receive $5,333.33, which represents 26.67% ($8,000/$30,000) of $20,000. If ROT C was assessed $7,000 in payment for order flow fees, it would receive $4,666.67, which represents 23.33% ($7,000/$30,000) of $20,000.

[16] The amount a specialist may receive in reimbursement is limited to the percentage of ROT monthly volume to total specialist and ROT monthly volume in the equity options payment for order flow program. For example, if a specialist unit has a payment for order flow arrangement with an order flow provider to pay that order flow provider $0.70 per contract for order flow routed to the Exchange and that order flow provider sends 90,000 customer contracts to the Exchange in one month for one option, then the specialist would be required, pursuant to its agreement with the order flow provider, to pay the order flow provider $63,000 for that month. Assuming that the 90,000 represents 30,000 specialist transactions, 20,000 ROT transactions and 40,000 transactions from

Continued

The Exchange may audit a specialist's payments to payment-accepting firms to verify the use and accuracy of the payment for order flow funds remitted to the specialists based on their certification.[17]

The Exchange continues to implement a quality of execution program.[18]

Proposed Equity Options Payment for Order Flow Program Commencing November 1, 2004

The Exchange proposes to charge a payment for order flow fee of $0.40 on all equity options traded on the Phlx, other than options on the QQQs, which would continue to be assessed $1.00, and FXI Options. The Exchange is not proposing to assess a payment for order flow fee on FXI Options because the Exchange is not currently seeking to garner order flow in this product from other exchanges, because FXI Options do not currently trade on other exchanges. Attracting order flow from other exchanges is the principal goal of the payment for order flow program.

Specialists would continue to request payment for order flow reimbursements on an option-by-option basis. According to the Exchange, the collected funds would be used by each specialist unit to reimburse it for monies expended to attract options orders to the Exchange by making payments to order flow providers who provide order flow to the Exchange. The Phlx states that specialists would receive their respective funds only after submitting an Exchange certification form identifying the amount of the requested funds.[19]

Specialist units would continue to elect to participate or not to participate in the program in all options in which they are acting as a specialist by notifying the Exchange in writing no later than five business days prior to the start of the month.[20] If electing not to participate in the program, the specialist unit waives its right to any reimbursement of payment for order flow funds for the month(s) during which it elected to opt out of the program. Payment for order flow charges would apply to ROTs as long as the specialist unit for that option has elected to participate in the Exchange's payment for order flow program. A payment for order flow fee would be assessed, even beginning mid-month, if an option is allocated (or reallocated) from a non-participating specialist unit to a specialist unit that participates in the Exchange's payment for order flow program.

The Exchange also proposes to return to ROTs, by option, any excess payment for order flow funds billed but not reimbursed to specialists.[21] According to the Phlx, excess funds would be returned to the ROTs (reflected as a credit on the monthly invoices) and distributed on a pro rata basis to the applicable ROTs.[22] Thus, excess funds would no longer be carried forward.

The Phlx states that no other changes to the Exchange's payment for order flow program are being proposed at this time.[23]

The payment for order flow fees as set forth in this proposal would be in effect for trades settling on or after November 1, 2004.

Below is the text of the proposed rule change. Proposed new language is in *italics*; deletions are in [brackets].

* * * * *

SUMMARY OF EQUITY OPTION CHARGES (p. 3/3)

EQUITY OPTION PAYMENT FOR ORDER FLOW FEES*

Registered Option Trader (on-floor)** +

QQQ (NASDAQ–100 Index Tracking Stock SM)—$1.00 per contract

Remaining [Top 150] Equity Options, *except FXI Options*—$0.40 per contract

* Assessed on transactions resulting from customer orders, subject to a 500-contract cap, per individual cleared side of a transaction

** [Any excess payment for order flow funds will be carried forward to the next month by option and will not be rebated to ROTs. ROTs may, however, receive a rebate of any excess funds in a particular option for a particular month if the specialist unit does not request reimbursement by option of at least 50% of the total amount of payment for order flow funds billed and collected from ROTs for each option in which that specialist unit is acting as specialist.] *Any excess payment for order flow funds billed but not reimbursed to specialists will be returned to the applicable ROTs (reflected as a credit on the monthly invoices) and distributed on a pro rata basis.*

Only incurred when the specialist elects to participate in the payment for order flow program

---

firms, broker-dealers and other customers, the specialist may request reimbursement of up to 40% (20,000/50,000) of the amount paid ($63,000 × 40% = $25,200). However, because the ROTs will have paid $8,000 into the payment for order flow fund for that month, the specialist may collect only $8,000 (20,000 contracts × $0.40 per contract) of its $25,200 reimbursement request plus, if applicable, any excess funds for that particular option carried over from a prior month up to the specialist's $25,200 reimbursement request.

[17] *See* Supplemental Material .01 of Exchange Rule 760.

[18] *See e.g.* Securities Exchange Act Release No. 43436 (October 11, 2000), 65 FR 63281 (October 23, 2000) (SR–Phlx–00–83).

[19] *See supra* note 13. Specialist units are given instructions as to when the certification forms are required to be submitted.

[20] *See supra* note 11.

[21] In the September/October Program, any excess payment for order flow funds are carried forward to the next month by option and may not be applied retroactively to past deficits, which may be incurred when the specialist requests more than the amount collected. Thus, excess funds generally are not rebated to ROTs. However, under the September/October Program, excess funds may be rebated in the limited situation where a specialist unit opts into the program (and does not opt out of the program entirely by the 15th day of the month or by option by the third business day after the end of the month) and does not request reimbursement by option of at least 50% of the total amount of payment for order flow funds billed to and collected from ROTs for each option in which that specialist unit is acting as the specialist, then any excess payment for order flow funds remaining after the specialist has been reimbursed is rebated, on a pro rata basis, to the affected ROTs for those particular options in which the 50% threshold was not met. This separate rebate requirement would no longer be necessary because, pursuant to this proposal, any excess payment for order flow funds that have been billed, but not requested by specialist, will be returned to the applicable ROTs on a pro rata basis. For example, if a ROT is assessed a payment for order flow fee of $10,000 for the month of November and $2,000 was to be returned to the ROT because it represented the amount of funds not requested by specialists, that amount would appear on the same November invoice. Thus, the ROT would submit $8,000 in payment for order flow fees for the month of November.

[22] For example, if a specialist unit requests $10,000 in reimbursement for one option and the total amount billed and collected from the ROTs was $30,000, the remaining $20,000 will be rebated to the ROTs on a pro rata basis. If ROT A was assessed $15,000 in payment for order flow fees, he would receive a rebate of $10,000 ($15,000/$30,000 = 50% and 50% of $20,000 is $10,000). If ROT B was assessed $8,000 in payment for order flow fees, it would receive $5,333.33, which represents 26.67% ($8,000/$30,000) of $20,000. If ROT C was assessed $7,000 in payment for order flow fees, it would receive $4,666.67, which represents 23.33% ($7,000/$30,000) of $20,000. The Exchange does not know at this time whether there will be any excess payment for order flow funds from the September/October Program because billing and collecting for the September/October Program will not be completed until after November 2004 and because of the different reimbursement procedures applicable to the Exchange's equity options payment for order flow program in effect prior to this proposal. Telephone conversation between Cynthia K. Hoekstra, Counsel, Phlx, and David Liu, Attorney, Division of Market Regulation, Commission, on November 23, 2004. Therefore, the Exchange intends to file a separate proposed rule change, if necessary, to address the handling of any excess payment for order flow funds generated from the September/October Program.

[23] Accordingly, the calculation of the top 150 options as described in note 8, *supra*, would no longer be necessary because the new program extends beyond the top 150 options.

II. Self-Regulatory Organization's Statement of the Purpose of, and Statutory Basis for, the Proposed Rule Change

In its filing with the Commission, the Phlx included statements concerning the purpose of, and basis for, the proposed rule change and discussed any comments it received on the proposed rule change. The text of these statements may be examined at the places specified in item IV below. The Phlx has prepared summaries, set forth in sections A, B, and C below, of the most significant aspects of such statements.

A. Self-Regulatory Organization's Statement of the Purpose of, and Statutory Basis for, the Proposed Rule Change

1. Purpose

The Phlx states that the purpose of the proposed rule change is to adopt a more competitive equity options payment for order flow program. Equity options payment for order flow programs are in place at each of the other options exchanges in varying amounts and covering various options. The Phlx states that the revenue generated by the $1.00 or $0.40 payment for order flow fees, as outlined in this proposal, is intended to be used by specialist units to compete for order flow in equity options listed for trading on the Exchange. The Exchange believes that, in today's competitive environment, changing its payment for order flow program to compete more directly with other options exchanges is important and appropriate. Accordingly, the Exchange proposes to expand its program beyond the top 150 options. The Exchange also proposes to modify the program to return excess ROT fees rather than carry those excesses forward. The Phlx believes that returning any excess payment for order flow funds to ROTs on a pro rata basis should help to minimize the financial impact to them in connection with the collection of the Exchange payment for order flow fee.

2. Basis

The Exchange believes that its proposal to amend its schedule of dues, fees, and charges is consistent with section 6(b) of the Act [24] in general, and furthers the objectives of section 6(b)(4) of the Act [25] in particular, in that it is an equitable allocation of reasonable fees among Phlx members and that it is designed to enable the Exchange to compete with other markets in attracting customer order flow. Because the payment for order flow fees are collected only from member organizations respecting customer transactions, the Phlx believes that there is a direct and fair correlation between those members who fund the equity options payment for order flow fee program and those who receive the benefits of the program. The Exchange states that ROTs also potentially benefit from additional customer order flow. In addition, the Phlx believes that the proposed payment for order flow fees would serve to enhance the competitiveness of the Phlx and its members and that this proposal therefore is consistent with and furthers the objectives of the Act, including section 6(b)(5) thereof,[26] which requires the rules of exchanges to be designed to promote just and equitable principles of trade, and to remove impediments to and perfect the mechanism of a free and open market and a national market system. The Phlx believes that attracting more order flow to the Exchange should, in turn, result in increased liquidity, tighter markets and more competition among exchange members.

B. Self-Regulatory Organization's Statement on Burden on Competition

The Exchange does not believe that the proposed rule change will impose any inappropriate burden on competition.

C. Self-Regulatory Organization's Statement on Comments on the Proposed Rule Change Received From Members, Participants, or Others

No written comments were either solicited or received.

III. Date of Effectiveness of the Proposed Rule Change and Timing for Commission Action

The foregoing proposed rule change has been designated as a fee change pursuant to section 19(b)(3)(A)(ii) of the Act [27] and Rule 19b–4(f)(2) [28] thereunder, because it establishes or changes a due, fee, or other charge imposed by the Exchange. Accordingly, the proposal will take effect upon filing with the Commission. At any time within 60 days of the filing of such proposed rule change, the Commission may summarily abrogate such rule change if it appears to the Commission that such action is necessary or appropriate in the public interest, for the protection of investors, or otherwise in furtherance of the purposes of the Act.

IV. Solicitation of Comments

Interested persons are invited to submit written data, views, and arguments concerning the foregoing, including whether the proposed rule change is consistent with the Act. Comments may be submitted by any of the following methods:

Electronic Comments

- Use the Commission's Internet comment form (*http://www.sec.gov/rules/sro.shtml*); or
- Send an e-mail to *rule-comments@sec.gov*. Please include File Number SR–Phlx–2004–68 on the subject line.

Paper Comments

- Send paper comments in triplicate to Jonathan G. Katz, Secretary, Securities and Exchange Commission, 450 Fifth Street, NW., Washington, DC 20549–0609.

All submissions should refer to File Number SR–Phlx–2004–68. This file number should be included on the subject line if e-mail is used. To help the Commission process and review your comments more efficiently, please use only one method. The Commission will post all comments on the Commission's Internet Web site (*http://www.sec.gov/rules/sro.shtml*). Copies of the submission, all subsequent amendments, all written statements with respect to the proposed rule change that are filed with the Commission, and all written communications relating to the proposed rule change between the Commission and any person, other than those that may be withheld from the public in accordance with the provisions of 5 U.S.C. 552, will be available for inspection and copying in the Commission's Public Reference Room. Copies of such filing also will be available for inspection and copying at the principal office of the Phlx. All comments received will be posted without change; the Commission does not edit personal identifying information from submissions. You should submit only information that you wish to make available publicly. All submissions should refer to File Number SR–Phlx–2004–68 and should be submitted on or before December 22, 2004.

[24] 15 U.S.C. 78f(b).

[25] 15 U.S.C. 78f(b)(4).

[26] 15 U.S.C. 78f(b)(5).

[27] 15 U.S.C. 78s(b)(3)(A)(ii).

[28] 17 CFR 240.19b–4(f)(2).

For the Commission, by the Division of Market Regulation, pursuant to delegated authority.[29]

Margaret H. McFarland,

Deputy Secretary.

[FR Doc. E4–3411 Filed 11–30–04; 8:45 am]

BILLING CODE 8010–01–P

SECURITIES AND EXCHANGE COMMISSION

[Release No. 34–50728; File No. SR–Phlx–2004–74]

Self-Regulatory Organizations; Notice of Filing and Immediate Effectiveness of Proposed Rule Change and Amendment No. 1 by the Philadelphia Stock Exchange, Inc. Relating to $5 Bid/Ask Differentials in Options Traded on the Exchange's Electronic Trading Platform, Phlx XL

November 23, 2004.

Pursuant to section 19(b)(1) of the Securities Exchange Act of 1934 (''Act''),[1] and Rule 19b–4 thereunder,[2] notice is hereby given that on November 3, 2004, the Philadelphia Stock Exchange, Inc. (''Phlx'' or ''Exchange'') submitted to the Securities and Exchange Commission (''SEC'' or ''Commission'') the proposed rule change as described in items I and II below, which items have been prepared by the Exchange. On November 10, 2004, the Phlx filed Amendment No. 1 to the proposed rule change, which changed the proposal from a filing made pursuant to section 19(b)(2) of the Act to a filing made pursuant to section 19(b)(3)(A) of the Act,[3] and Rule 19b–4(f)(6) thereunder.[4] Accordingly, the proposed rule change became effective upon filing of Amendment No. 1.[5] The Commission is publishing this notice to solicit comments on the proposed rule change, as amended, from interested persons.

I. Self-Regulatory Organization's Statement of the Terms of Substance of the Proposed Rule Change

The Phlx proposes to adopt new Phlx Rule 1014(c)(i)(A)(2), which would relax the quotation spread requirements for Streaming Quote Options traded on the Exchange's new electronic trading platform, Phlx XL.[6] Specifically, the proposal would allow Streaming Quote Options trading on Phlx XL to be quoted electronically with a difference not to exceed $5 between the bid and offer, regardless of the price of the bid. The text of the proposed rule change appears below. Proposed additions are in *italics.*

* * * * *

Rule 1014

Obligations and Restrictions Applicable to Specialists and Registered Options Traders

(a)–(b) No change.

(c) In Classes of Option Contracts to Which Assigned—Affirmative Obligations. With respect to classes of option contracts to which his assignment extends, a Specialist and an ROT, whenever the ROT enters the trading crowd in other than a floor brokerage capacity or is called upon by a Floor Official or a Floor Broker, to make a market, are expected to engage, to a reasonable degree under the existing circumstances, in dealing for his own account when there exists, or it is reasonably anticipated that there will exist, a lack of price continuity, a temporary disparity between the supply of and demand for a particular option contract, or a temporary distortion of the price relationships between option contracts of the same class. Without limiting the foregoing, a Specialist and an ROT is expected to perform the following activities in the course of maintaining a fair and orderly market:

(i) Options on Equities (including Exchange-Traded Fund Shares).

(A)(*1*) Quote Spread Parameters (Bid/Ask Differentials)—Bidding and/or offering so as to create differences of no more than $.25 between the bid and the offer for each option contract for which the prevailing bid is less than $2; no more than of $.40 where the prevailing bid is $2 or more but less than $5; no more than $.50 where the prevailing bid is $5 or more but less than $10; no more than $.80 where the prevailing bid is $10 or more but less than $20; and no more than $1 where the prevailing bid is $20 or more, provided that the bid/ask differentials stated above shall not apply to in-the-money series where the market for the underlying security is wider than the differentials set forth above. For such series, the bid/ask differentials may be as wide as the quotation for the underlying security on the primary market, or its decimal equivalent rounded up to the nearest minimum increment. The Exchange may establish differences other than the above for one or more series or classes of options.

(2) Streaming Quote Options trading on Phlx XL may be quoted electronically with a difference not to exceed $5 between the bid and offer regardless of the price of the bid. The $5 bid/ask differentials only apply to Streaming Quote Options trading on Phlx XL and only following the opening rotation in each security (i.e., the bid/ask differentials specified in sub-paragraph (c)(i)(A)(1) above shall apply during opening rotation). Quotations provided in open outcry in Streaming Quote Options may not be made with $5 bid/ask differentials and instead must comply with the bid/ask differential requirements described in sub-paragraph (c)(i)(A)(1) above and not in this sub-paragraph (c)(i)(A)(2).

(B) No change.

(d)–(h) No change.

Commentary: No change.

* * * * *

II. Self-Regulatory Organization's Statement of the Purpose of, and Statutory Basis for, the Proposed Rule Change

In its filing with the Commission, the Phlx included statements concerning the purpose of and basis for the proposed rule change and discussed any comments it received on the proposed rule change. The text of these statements may be examined at the places specified in item IV below. The Phlx has prepared summaries, set forth in sections A, B, and C below, of the most significant aspects of such statements.

A. Self-Regulatory Organization's Statement of the Purpose of, and Statutory Basis for, the Proposed Rule Change

1. Purpose

The purpose of the proposed rule change is to reduce the market making risk, especially in volatile markets, by relaxing the quotation spread requirements for Streaming Quote Options traded on the Exchange's new electronic trading platform, Phlx XL. According to the Phlx, the primary purpose of the current quote spread requirements set forth in Phlx Rule 1014(c)(i)(A) is to help to maintain narrow spreads in options. The Phlx believes that these requirements can have the unintended consequence of requiring those making markets to quote at prices that are unnecessarily narrow, thereby exposing them to great risk if markets move quickly.

The proposed $5 bid/ask differential would apply only to electronic

[29] 17 CFR 200.30–3(a)(12).

[1] 15 U.S.C. 78s(b)(1).

[2] 17 CFR 240.19b–4.

[3] 15 U.S.C. 78s(b)(3)(A).

[4] 17 CFR 240.19b–4.

[5] The 60-day period within which the Commission may summarily abrogate the proposed rule change under section 19(b)(3)(C) of the Act commenced on November 10, 2004, the date the Phlx filed Amendment No. 1 to the proposal.

[6] *See* Securities Exchange Act Release No. 50100 (July 27, 2004), 69 FR 46612 (August 3, 2004) (order approving File No. SR–Phlx–2003–59).

quotations submitted in Streaming Quote Options traded on Phlx XL. The current bid/ask differential requirements contained in Phlx Rule 1014(c)(i)(A)(1) would continue to apply to quotations in Streaming Quote Options made in open outcry, and to quotations in non-Streaming Quote Options.

The Exchange believes that given the competitive market making structure of Phlx XL and the existence of vigorous inter-market competition, the mandatory quote spread requirements may not be necessary to ensure narrow and competitive spreads in options. In this regard, the Phlx believes that the Phlx XL market structure creates strong incentives for specialists, Registered Options Traders (''ROTs'') and other market participants to disseminate competitive prices. The Exchange notes that in Phlx XL, each specialist and Streaming Quote Trader quotes independently, and customers, off-floor broker-dealers, and ROTs can enter limit orders at prices that improve the Exchange's disseminated bid or offer.[7] The Exchange automatically collects this trading interest information, calculates the Phlx best bid and offer, and disseminates that value to the Options Price Reporting Authority. Accordingly, the Phlx believes that its Phlx XL market is competitive, accessible and transparent.

In addition, the Phlx believes that market participants in Phlx XL have strong incentives to quote competitively. The Exchange currently allocates incoming orders based on the price and size of orders and quotes resting in the book. Under the Exchange's trade allocation rules applicable to options trading on Phlx XL, the larger the size of a market maker's quote at the best price, the greater the size of the allocation he or she receives.[8] Conversely, if a market participant does not quote at the best price, the market participant will not participate in any electronic trade allocations. The Phlx believes, moreover, that given NBBO protections in place at each exchange, as well as under Plan for the Purpose of Creating an Options Intermarket Linkage (the ''Linkage Plan''), market participants have even stronger incentives to quote at the best price, lest incoming orders be filed away. Thus, the Phlx believes that both inter-market and intra-market competitive forces provide strong incentives for market participants to quote competitively and to enter quotes and orders that improve the price and depth of the market.

For these reasons, Phlx proposes to expand the allowable spread in Streaming Quote Options traded on Phlx XL to $5 for options quoted electronically. The proposed quote spread requirements will apply after the opening trading rotation. During the opening trading rotation, market makers will be required to quote in accordance with the traditional bid/ask width requirements. The $5 quotation requirements would become operative immediately following the opening rotation.

2. Statutory Basis

The Exchange believes that the proposed rule change is consistent with section 6(b) of the Act,[9] in general, and furthers the objectives of section 6(b)(5) of the Act,[10] in particular, in that it is designed to promote just and equitable principles of trade, to prevent fraudulent and manipulative acts and, in general, to protect investors and the public interest.

B. Self-Regulatory Organization's Statement on Burden on Competition

The Exchange does not believe that the proposed rule change will impose any inappropriate burden on competition.

C. Self-Regulatory Organization's Statement on Comments on the Proposed Rule Change Received From Members, Participants or Others

No written comments were either solicited or received.

III. Date of Effectiveness of the Proposed Rule Change and Timing for Commission Action

The Exchange has designated the proposed rule change as a ''non-controversial'' rule change[11] pursuant to section 19(b)(3)(A) of the Act[12] and subparagraph (f)(6) of Rule 19b–4 thereunder.[13] Consequently, because the foregoing rule change: (1) Does not significantly affect the protection of investors or the public interest; (2) does not impose any significant burden on competition; and (3) does not become operative for 30 days from the date on which it was filed, or such shorter time as the Commission may designate if consistent with the protection of investors and the public interest, and the Phlx provided the Commission with written notice of its intent to file the proposed rule change at lease five days prior to the filing date, it has become effective pursuant to section 19(b)(3)(A) of the Act[14] and Rule 19b–4(f)(6) thereunder.[15]

A proposed rule change filed under Rule 19b–4(f)(6) normally does not become operative prior to 30 days after the date of filing. However, Rule 19b–4(f)(6)(iii) permits the Commission to designate a shorter time if such action is consistent with the protection of investors and the public interest. The Exchange has requested that the Commission waive the 30-day operative delay specified in Rule 19b–4(f)(6) in order to remain competitive with other exchanges with similar rules in effect. In this regard, the Phlx notes that its proposal is based on Chicago Board Options Exchange, Inc. (''CBOE'') Rule 8.7(b)(iv)(A);[16] International Securities Exchange, Inc. (''ISE'') Rule 803(b)(4);[17] and Pacific Exchange, Inc. (''PCX'') Rule 6.37(b)(1)(G).[18]

The Commission believes that waiving the 30-day operative delay is consistent with the protection of investors and the public interest.[19] Specifically, the Commission believes that allowing the Phlx to implement $5 quotation spread parameters will help the Phlx to compete with other options exchanges that have adopted similar rules. The Commission believes that the Phlx's proposal raises no new issues or regulatory concerns that the Commission did not consider in approving the ISE and CBOE proposals. For these reasons, the Commission designates that the proposal become operative immediately.

At any time within 60 days of the filing of the proposed rule change, the Commission may summarily abrogate the rule change if it appears to the Commission that the action is necessary or appropriate in the public interest, for the protection of investors, or would otherwise further the purposes of the Act.

[7] The Phlx clarified this sentence in a telephone conversation. Telephone conversation between Richard Rudolph, Director and Counsel, Phlx, and Yvonne Fraticelli, Special Counsel, Division of Market Regulation, Commission, on November 23, 2004.

[8] *See* Phlx Rule 1014(g)(vii).

[9] 15 U.S.C. 78f(b).

[10] 15 U.S.C. 78f(b)(5).

[11] *See* Amendment No. 1.

[12] 15 U.S.C. 78s(b)(3)(A).

[13] 17 CFR 240.19b–4(f)(6).

[14] 15 U.S.C. 78s(b)(3)(A).

[15] 17 CFR 240.19b–4(f)(6).

[16] *See* Securities Exchange Act Release No. 50079 (July 26, 2004), 69 FR 45858 (July 30, 2004) (order approving File No. SR–CBOE–2004–44).

[17] *See* Securities Exchange Act Release No. 50015 (July 14, 2004), 69 FR 43872 (July 22, 2004) (order approving File No. SR–ISE–2003–22).

[18] *See* Securities Exchange Act Release No. 50538 (October 14, 2004), 69 FR 62105 (October 22, 2004) (notice of filing and immediate effectiveness of SR–PCX–2004–89).

[19] For purposes only of waiving the operative delay for this proposal, the Commission has considered the proposed rule's impact on efficiency, competition, and capital formation. 15 U.S.C. 78c(f).

IV. Solicitation of Comments

Interested persons are invited to submit written data, views, and arguments concerning the foregoing, including whether the proposed rule change is consistent with the Act. Comments may be submitted by any of the following methods:

Electronic Comments

- Use the Commission's Internet comment form (*http://www.sec.gov/rules/sro.shtml*); or
- Send an e-mail to *rule-comments@sec.gov*. Please include File Number SR–Phlx–2004–74 on the subject line.

Paper Comments

- Send paper comments in triplicate to Jonathan G. Katz, Secretary, Securities and Exchange Commission, 450 Fifth Street, NW., Washington, DC 20549–0609.

All submissions should refer to File Number SR–Phlx–2004–74. This file number should be included on the subject line if e-mail is used. To help the Commission process and review your comments more efficiently, please use only one method. The Commission will post all comments on the Commission's Internet Web site (*http://www.sec.gov/rules/sro.shtml*). Copies of the submission, all subsequent amendments, all written statements with respect to the proposed rule change that are filed with the Commission, and all written communications relating to the proposed rule change between the Commission and any person, other than those that may be withheld from the public in accordance with the provisions of 5 U.S.C. 552, will be available for inspection and copying in the Commission's Public Reference Section, 450 Fifth Street, NW., Washington, DC 20549. Copies of this filing also will be available for inspection and copying at the principal office of the Phlx. All comments received will be posted without change; the Commission does not edit personal identifying information from submissions. You should submit only information that you wish to make available publicly. All submissions should refer to File Number SR–Phlx–2004–74 and should be submitted on or before December 22, 2004.

For the Commission, by the Division of Market Regulation, pursuant to delegated authority.[20]

Margaret H. McFarland,

Deputy Secretary.

[FR Doc. E4–3412 Filed 11–30–04; 8:45 am]

BILLING CODE 8010–01–P

[20] 17 CFR 200.30–3(a)(12).

DEPARTMENT OF STATE

[Public Notice 4895]

Request for Proposals: Program for Research and Training on Eastern Europe and the Independent States of the Former Soviet Union (Title VIII)

Summary: The Department of State invites organizations with substantial and wide-reaching experience in administering research and training programs to serve as intermediaries conducting nationwide competitive programs for scholars, students and institutions pertaining to advanced research and language training on the countries of Southeast Europe and Eurasia. U.S.-based public and private nonprofit organizations and educational institutions may submit proposals to carry out Title VIII-funded programs that (1) support and sustain American expertise on the countries of Eurasia and Southeast Europe, (2) bring American expertise to the service of the U.S. Government, and (3) further U.S. foreign assistance goals. The grants will be awarded through an open, merit-based competition. The purpose of this request for proposals is to inform potential applicant organizations of programmatic, procedural and funding information for the fiscal year 2005 Title VIII grants competition.

We request that applicants read the entire **Federal Register** announcement before addressing inquiries to the Title VIII Program Office or submitting a proposal. This notice contains three parts. Part I addresses Shipment and Deadline for Proposals. Part II consists of a Statement of Purpose and Program Priorities. Part III provides Funding Information for the program.

Authority: Grantmaking authority for the Program for Research and Training on Eastern Europe and the Independent States of the Former Soviet Union (Title VIII) is contained in the Soviet-Eastern European Research and Training Act of 1983 (22 U.S.C. 4501–4508, as amended) and is funded through the FREEDOM Support Act (FSA) of 1992 and Support for East European Democracy (SEED) Act of 1992.

Part I

Shipping and Deadline for Proposals: Due to security procedures proposals must be sent via a nationally recognized overnight delivery service (*i.e.*, DHL, Federal Express, UPS, Airborne Express, or USPS Express Mail, etc.) or hand-delivered. Proposals may not be sent by regular U.S. Mail.

Proposals sent by USPS Express Mail or overnight delivery service must have a postmark or invoice dated by Friday, January 28, 2005 and must be received within seven (7) days after the deadline. Hand-delivered proposals must be submitted no later than 4 p.m. on January 28, 2005. Faxed proposals will not be accepted at any time. Late applications will not be considered. It is the applicant's responsibility to ensure that proposals are delivered on time.

Address proposals to: Maria Seda-Gaztambide, Title VIII Program Assistant, U.S. Department of State, INR/RES, Room 2251, 2201 C Street, NW., Washington, DC 20520–6510.

Applications Delivered by Hand: Hand-delivered proposals will be accepted between 9 a.m. and 4 p.m. EST daily, except Saturdays, Sundays and Federal holidays. Proposals must be brought to the State Department's 21st Street entrance, just north of the intersection with C Street, NW. Contact Maria Seda-Gaztambide at (202) 736–4572 to arrange delivery time.

Part II

Program Information: In the Soviet-Eastern European Research and Training Act of 1983 (Title VIII), the Congress declared that independently verified factual knowledge about the countries of that area is ''of utmost importance for the national security of the United States, for the furtherance of our national interests in the conduct of foreign relations, and for the prudent management of our domestic affairs.'' Congress also declared that the development and maintenance of such knowledge and expertise ''depends upon the national capability for advanced research by highly trained and experienced specialists, available for service in and out of Government.''

The Title VIII Program provides financial support for advanced research, graduate and language training and other related functions on the countries of the region. The program operates on a ''pass-through'' basis in that grantee organizations serve as intermediaries and conduct nationwide competitive programs to distribute grant funds to individual scholars, language students or universities. The program's goal is to support and sustain a cadre of U.S.

experts by providing a full spectrum of financial assistance spanning the careers of scholars and students who have made, or are likely to make, a career commitment to the study of Southeast Europe and Eurasia. The Department of State's Title VIII Program Office brings this research and expertise to the service of the U.S. Government. The Title VIII Program also contributes to the overall objectives of the FREEDOM Support and SEED Acts through the Title VIII scholars' and students' participation in interactive educational and professional activities, volunteering, consulting, and other endeavors that further economic prosperity and mutual understanding in the region. The full purpose of the Title VIII Program and the eligibility requirements are set forth in Pub. L. 98–164, 97 Stat. 1047–50, as amended.

The following countries are eligible for funding under this request for proposals: Albania, Armenia, Azerbaijan, Belarus, Bosnia and Herzegovina, Bulgaria, Croatia, Republic of Macedonia, Georgia, Kazakhstan, Kyrgyzstan, Moldova, Romania, Russia, Serbia and Montenegro, Tajikistan, Turkmenistan, Ukraine and Uzbekistan. Travel to certain countries may be subject to restrictions due to unforeseen world events, Congressional restrictions, U.S. embassy requirements, or general security concerns.

The Act established an Advisory Committee to recommend grant policies and recipients. The Deputy Secretary of State, after consultation with the Advisory Committee, approves policies and makes the final determination on awards. Once the proposal submission deadline has passed, Title VIII Program staff and the Title VIII Advisory Committee may not discuss any aspect of this competition with applicants until after the proposal review and approval process has been completed.

Eligibility: U.S.-based public and private non-profit organizations and educational institutions with substantial and wide-reaching expertise in administering advanced research and training programs and conducting nationwide competitive programs for scholars, students and institutions pertaining to advanced research and language training on the countries of Southeast Europe and Eurasia and related fields may apply. To demonstrate eligibility, applicant organizations should describe their experience and expertise in each of the following:

—Conducting national, open, merit-based competitions for the purpose of distributing grant funds for advanced research and language training at the graduate level and above;
—Peer review mechanisms; and
—Recruiting individuals who are likely to make a career commitment to the study of Eastern Europe and/or Eurasia;
—Bringing American expertise to the service of the U.S. Government.

NB: Individual scholars and students seeking Title VIII support should refer to the Title VIII Program website for funding opportunities: *http://www.state.gov/s/inr/grants*. Proposals from institutions or organizations to fund their own projects, *i.e.*, projects that are not national in scope and/or do not involve open, merit-based recruitment of participants will not be considered.

Scope: The Title VIII legislation states that the program should develop a stable, long-term, national program of unclassified, advanced research and training on the countries of Eastern Europe and/or Eurasia. Applicants' proposals should outline programs that: (1) Support and sustain American expertise on the countries of Eurasia and Southeast Europe, (2) bring American expertise to the service of the U.S. Government, and (3) further U.S. foreign assistance goals.

Guidelines: Programs should be national in scope and may:

(1) Award contracts or grants to U.S. institutions of higher education or nonprofit organizations in support of post-doctoral or equivalent-level research projects, to be cost-shared with partner institutions;

(2) Offer graduate, post-doctoral and teaching fellowships for advanced training on the countries of Southeast Europe and Eurasia, and in related studies, including training in the languages of the region, to be cost-shared with partner institutions;

(3) Provide fellowships and other support for American specialists enabling them to conduct advanced research on the countries of Southeast Europe and Eurasia, and in related studies;

(4) Facilitate research collaboration among U.S. scholars, the U.S. Government, and private specialists on Southeast Europe and Eurasia studies;

(5) Provide field-strengthening activities that stimulate interaction and sustained relationships among junior and senior scholars;

(6) Provide advanced training and research in the countries of Southeast Europe and Eurasia by facilitating access for American specialists to research facilities and resources in those countries;

(7) Facilitate the dissemination of research findings, methods and data among U.S. Government agencies and the public;

(8) Strengthen the national capability for advanced research or training on the countries of Southeast Europe and Eurasia; and

(9) Bring Title VIII scholarship to the service of the U.S. Government in ways not specified above.

In addition to the above guidelines, support for specific activities will be guided by the following policies and priorities:

• *Support for Transitions and U.S. Assistance Goals:* Program activities are strongly encouraged that build expertise among U.S. specialists on the region, and also: (1) Promote fundamental goals of U.S. foreign assistance programs such as establishing functioning market economies and promoting democratic governance and civil societies, and (2) provide knowledge to both U.S. and foreign audiences related to current U.S. policy interests in the region, broadly defined. This includes, but is not limited to, such topics as resolution of ethnic, religious, and other conflict; terrorism; transition economics; access to information; women's issues; human rights; and citizen participation in politics and civil society. For overseas research, applicants are asked to propose creative means through which individual grant recipients' work may complement assistance activities in the region. Applicants are strongly encouraged to propose programs where grants for overseas work include a service component such as lecturing at a university or participating in workshops with host government and parliamentary officials, nongovernmental organizations, and other relevant audiences on issues related to economic and political transitions.

• *Research Topics:* The Title VIII Program supports research topics that strengthen the fields of Eurasian and East European Studies, and that address U.S. policy interests in the region, broadly defined. Historical or cultural research that promotes understanding of current events in the region is acceptable if an explicit connection is made to policy relevant issues, broadly defined. Technical research in fields such as mathematics is not appropriate for funding under Title VIII.

• *Regional Focus:* Priority will be given to programs that focus on gaps in knowledge on Central Asia, the Caucasus, and the Balkans, especially the former Yugoslavia. The greater Central Asia region is critical in the global war on terrorism, therefore also

eligible are proposals that incorporate a focus on ''Cross-Regional Issues'' and include specifically the countries of Kazakhstan, Kyrgyzstan, Tajikistan, Turkmenistan and/or Uzbekistan, relative to their shared historical, ethnic, linguistic, political, economic, and cultural ties with such countries as Iraq, Iran, Afghanistan, Pakistan, Korea, China and Turkey.

• *Balanced National Program:* In making its recommendations, the Advisory Committee will seek to encourage a coherent, long-term and stable effort directed toward developing and maintaining a national capability on the countries of Southeast Europe and Eurasia. Program proposals can be for the conduct of any of the functions enumerated, but in making its recommendations, the Committee will concern itself particularly with the development of a balanced national effort that will ensure attention to all eligible countries.

• *Promoting Federal Service for Title VIII Grant Recipients:* Although the Title VIII Program does not require a federal service commitment for individuals receiving funding, the Advisory Committee urges grantees to encourage individuals receiving Title VIII funding to pursue U.S. Government career opportunities, internships, or short-term sabbaticals after completing their awards. Grant recipient organizations are encouraged to: (1) Identify individuals for funding who have an interest in pursuing careers in the U.S. Government, and (2) provide opportunities for individuals in disciplines with Eurasian and/or Southeast European studies concentrations to serve on a temporary basis as a policy or other expert in U.S. Embassies, U.S. Government agencies and/or with NGOs in the region. Applications proposing more productive interaction among U.S. Government agencies, universities and non-government organizations (NGOs) in the U.S. and overseas are strongly encouraged.

• *Publications:* Funds awarded in this competition should not be used to subsidize journals, newsletters and other periodical publications.

• *Conferences:* Proposals to fund conferences will be considered for funding only if the conference is an interactive, field-strengthening activity and if it is a component of a larger program with greater duration and scope. Conference panelists must be selected through an open, merit-based selection process. In addition, conference proposals will be assessed according to their relative contribution to the advancement of knowledge and to the professional development of cadres in the fields, and will be competed and evaluated against research, fellowship or other proposals for achieving the objectives of this grant competition.

• *Language Support:* The Advisory Committee encourages a focus on the non-Russian languages of Eurasia and the less-commonly-taught languages of Southeast Europe. For Russian-language instruction/study, support may be provided only at the advanced level. Institutions seeking funding in order to offer language instruction are encouraged to apply to one or more of the national programs with appropriate peer review and selection mechanisms.

• *Support for Non-Americans:* The purpose of the program is to build and sustain U.S. expertise on the countries of Southeast Europe and Eurasia. Therefore, the Advisory Committee has determined that highest priority for support always should go to American specialists (*i.e.*, U.S. citizens or permanent residents). Support for such activities as long-term research fellowships (*i.e.*, nine months or longer), should be restricted solely to American scholars. Support for short-term activities also should be restricted to Americans, except in special instances where the participation of a non-American scholar has clear and demonstrable benefits to the U.S. scholarly community and/or the U.S. Government. In such special instances, the applicant will be required to justify the expenditure and notify the Title VIII Program office prior to the activity. Despite this restriction on support for non-Americans, collaborative projects are encouraged—where the non-American component is funded from other sources—and priority is given to institutions whose programs contain such an international component.

• *Cost-sharing:* (1) Title VIII legislation requires cost-sharing for projects involving post-doctoral or equivalent-level research projects; and graduate, post-doctoral and teaching fellowships for advanced training or language studies for institutions or individuals. Cost sharing is strongly encouraged in all programs. (2) Research solely on, and/or travel to, the countries of ''greater Central Asia'' or Central and East Europe outside of Southeast Europe as outlined in this request for proposals, is not eligible for FSA or SEED funding. Proposals may include a plan to support research projects on, and travel to, countries eligible and ineligible for FSA or SEED funding, to address cross-border issues, regional or comparative studies, etc., in which case travel to ineligible countries would be cost-shared with funding from other sources. (3) All proposed cost sharing should be included in the budget request in a separate column, and explained in the budget notes. The basis for determining the value of cash and in-kind contributions must be in accordance with OMB Circular A–110, (Revised), Subpart C.23—Cost Sharing and Matching.

• *Program Data Requirements:* Organizations awarded grants will be required to provide data on program participants and activities in an electronically accessible format for the Title VIII Alumni Database. Requested information would include the following: Name; Institution; Address; Contact Information; Field(s) of Expertise; Type/Title of Award; Location(s) of Research, Fellowship, or other Activity; Research Products/Titles; Service to the U.S. Government; Contribution to U.S. Assistance Goals; etc.

• *Reporting and Funding Acknowledgement:* Successful applicants will be required to submit quarterly financial and program reports, and will be expected to acknowledge the Department of State and the Title VIII Program in all Title VIII-supported research products, advertising, recruitment tools, announcements, and other related electronic or written communications.

Applications

Application Format: Applicants must submit 10 copies of the proposal (a clearly marked original and 9 copies) in Times New Roman, 12-point font. The ''Executive Summary,'' ''Proposal Narrative,'' ''Budget Presentation'' and ''Resumes'' must be submitted on a PC-formatted disk or CD. Proposals should include the following elements:

TAB 1: SF424 ''Application for Federal Assistance'' and Cover Letter with primary point of contact for questions if different than ''Authorized Representative.'' SF424 is online: (*http://www.whitehouse.gov/omb/grants/sf424.pdf*);

TAB 2: Executive Summary (one page, single-spaced—see below);

TAB 3: Proposal Narrative (not to exceed 20 double-spaced pages), and calendar or timeline of major program activities;

TAB 4: Budget Presentation (Detailed Budget, Budget Notes, and Budget Summary—see below for explanation);

TAB 5: Resumes (one page, key professional staff);

TAB 6: Letters of Support and/or Partnership; and

TAB 7: Certifications of Compliance with Federal Regulations (see below).

Applicants may append other information they consider essential, although bulky submissions are discouraged and run the risk of not being reviewed fully.

Executive Summary: A one page, single-spaced summary to include: two separate dollar figures indicating the amount of funding requested for Eurasia and Southeast Europe, respectively; a list of each proposed program component in priority order; and any additional information the applicant wishes to provide.

Budget: Because funds will be appropriated separately for Southeast Europe (SEED) and Eurasia (FSA) programs, proposals and budgets must delineate how the requested funds will be distributed by region, country (to the extent possible), and activity. Successful grant recipients will be required to report expenditures by region, country and activity. Applicants must provide the following Budget Presentation* (*budget templates are available by request from the Title VIII Program Office):

(1) Summary Budget, with one column each for the following: (1) DOS/Title VIII Costs; (2) Applicant Cost Sharing; (3) Third Party Cost Sharing, if applicable; and (4) Total Costs, with the following headings:

Southeast Europe (SEED)

Program Costs
Administrative Costs
TOTAL Southeast Europe

Eurasia (FSA)

Program Costs
Administrative Costs
TOTAL Eurasia

SEED + FSA Totals

TOTAL Program Costs (SEED + FSA)
TOTAL Administrative Costs (SEED + FSA)
(Percentage Of Total Admin Costs To Total Requested Funding:%)
TOTAL COSTS (SEED + FSA)

(2) Detailed Line-Item Budget with one column each for the following: (1) DOS/Title VIII Costs; (2) Applicant Cost Sharing; (3) Third Party Cost Sharing, if applicable; and (4) Total Costs. The budget must include the headings ''Program Costs'' and ''Administrative Costs,'' and both administrative and program costs must be listed separately according to region (Eurasia or Southeast Europe). Sub-budgets for each separate program component, phase, location or activity should be included to provide clarification. Administrative Costs include the following: ''Staff Requirements'' (each position should be listed as a separate line item with annual salary x percentage of time x number of months devoted to program), ''Benefits,'' ''Direct Costs,'' and ''Indirect Costs.'' Indirect costs are limited to 10 percent of total direct program costs. The ''Total Amount Requested'' should be the sum of the amount requested for Eurasia activities plus the amount requested for Southeast Europe activities.

(3) Budget Notes should clarify each line item, as necessary. Explain cost sharing with appropriate details and cross-references to the budget request.

(4) For applicants requesting funds to supplement a program having other sources of funding, submit a current budget for the total program and an estimated future budget for it, showing how specific lines in the budget would be affected by the allocation of requested grant funds. Other funding sources and amounts should be identified.

(5) Append the most recent audit report (the most recent U.S. Government audit report, if available) and the name, address, and point of contact of the audit agency.

(6) Include a prioritized list of proposed programs if funding is being requested for more than one program or activity.

All payments will be made to grant recipients through the U.S. Government's Payment Management System (PMS). Applicants should familiarize themselves with Department of State grant regulations contained in 22 CFR 145, ''Grants and Cooperative Agreements with Institutions of Higher Education, Hospitals, and Other Non-Profit Organizations''; 22 CFR 137; OMB Circular A–110, ''Uniform Administrative Requirements for Grants and Agreements with Institutions of Higher Education, Hospitals, and Other Non-Profit Organizations''; and OMB Circular A–133, ''Audits of Institutions of Higher Learning and Other Non-Profit Institutions.'' Organizations can receive a DUNS number at no cost: call the toll-free DUNS Number request line at (866) 705–5711 or apply online at *http://www.dnb.com/us/duns_update/.*

Proposal Narrative: The Applicant must describe the proposed programs, in no more than 20 double-spaced pages, including the benefits of these programs for the Southeast European and Eurasian fields, estimates of the types and amounts of anticipated awards, peer review procedures, recruitment plan for open, merit-based selection of participants with detailed information about advertising of program opportunities to eligible individuals and/or institutions, and anticipated selection committee participants. The narrative should address the applicant's plan to encourage policy relevant research, methods for dissemination of research products, and plans for bringing Title VIII to the service of the U.S. Government, where applicable.

Applicants who have received previous grants from the Title VIII Program should provide the following detailed information: names/affiliations of individual and institutional award recipients and amounts and types of awards from the past year; and a summary of the applicant's past grants under the Title VIII Program specifying both past and anticipated applicant to award ratios.

Proposals from national organizations involving language instruction programs should provide information on programs supported in the past year, including: indications of progress achieved by Title VIII-funded students; criteria for evaluation, including levels of instruction, degrees of intensiveness, facilities, and methods for measuring language proficiency (including pre- and post-testing); instructors' qualifications; and budget information showing estimated costs per student.

Certifications: Applicants must include three Certifications of Compliance with Federal Regulations. These forms are available online at: *http://www.state.gov/m/a/dir/c6606.htm*. (a) DS–2012 *Certification Regarding Drug-Free Workplace Requirements for Grantees Other Than Individuals;* (b) DS–2015 *Certification Regarding Debarment, Suspension and Other Responsibility Matters for Lower Tier and Primary Covered Transactions;* and (c) DS–2018 *New Restrictions on Lobbying.*

Review Process: the program office, a grant review panel and the Title VIII Advisory Committee will review all eligible proposals. Proposals also may be reviewed by the Office of the Legal Advisor or by other Department elements. Final funding decisions are at the discretion of the Department of State's Deputy Secretary. Final technical authority for grants resides with the Department of State's Grants Officers.

Review Criteria: Technically eligible proposals will be competitively reviewed according to the following criteria:

(1) Quality of the Program Idea: Proposals should be responsive to the guidelines provided in this request for proposals, and should exhibit originality, substance, precision, and relevance to the State Department's mission, the legislation supporting the Title VIII Program, and the FREEDOM Support and SEED Acts.

(2) Program Plan: Program objectives should be stated clearly. Objectives should respond to priorities and address gaps in knowledge for particular fields and/or regions. A calendar or timeline of major program activities should be included. Responsibilities of partner organizations, if any, should be described clearly.

(3) *Institutional Capacity:* Proposed personnel and selection committees should be adequate and appropriate to achieve the program's goals. The proposal should reflect the applicant's expertise and knowledge in conducting national competitive award programs of the type the applicant proposes on the countries of Southeast Europe and/or Eurasia. Past performance of prior recipients and the demonstrated potential of new applicants will be considered.

(4) *Cost-Effectiveness and Cost Sharing:* Administrative costs in the proposal budget should be kept to a minimum. All other items should be necessary and appropriate. Proposals should maximize cost sharing, including in-kind assistance, through contributions from the applicant, partner organizations, as well as other private sector support. ''Applicant Cost-Sharing'' and ''Third Party Cost Sharing'' should be included as separate columns in the budget request. Proposal budgets that do not provide cost sharing will be deemed less competitive in this category.

(5) Evaluation, Monitoring, Database, Reporting: Proposals should include a plan to evaluate and monitor program successes and challenges. Methods for linking outcomes to program objectives are recommended. The proposal should address the applicant's willingness and ability to contribute to the alumni database.

Part III

Available Funds: Funding for this program is subject to final Congressional action and the appropriation of FY 2005 funds. Funding may be available at a level of approximately $5.0 million. In Fiscal Year 2004, the program was funded at $5.0 million from the FREEDOM Support and SEED Acts, which funded grants to nine national organizations. The number of awards may vary each year, depending on the level of funding and the quality of the applications submitted.

The Department legally cannot commit funds that may be appropriated in subsequent fiscal years. Thus multi-year projects cannot receive assured funding unless such funding is supplied out of a single year's appropriation. Grant agreements may permit the expenditure from a particular year's grant to be made up to three years after the grant's effective date.

The terms and conditions published in this Request for Proposals are binding and may not be modified by any Department representative. Issuance of the Request for Proposals does not constitute an award commitment on the part of the U.S. Government. The Department reserves the right to reduce, revise, or increase proposal budgets in accordance with the needs of the program and the availability of funds.

Further Information: For further information or to arrange a consultation, contact Maria Seda-Gaztambide, Title VIII Program Assistant, by e-mail: *Seda-GaztambideMM@state.gov.*

Kenneth E. Roberts,

Executive Director, Advisory Committee for Studies of Eastern Europe and the Independent States of the Former Soviet Union, Department of State.

[FR Doc. 04–26506 Filed 11–30–04; 8:45 am]

BILLING CODE 4710–32–P

DEPARTMENT OF STATE

[Public Notice 4896]

U.S. Advisory Commission on Public Diplomacy; Notice of Meeting

The U.S. Advisory Commission on Public Diplomacy will hold a meeting at the United States Mission to the United Nations at 140 East 45th St., New York on December 7, 2004, from 10–11 a.m. The Commissioners will be briefed by Ambassador Anne Patterson.

The Commission was reauthorized pursuant to Public Law 106–113 (H.R. 3194, Consolidated Appropriations Act, 2000). The U.S. Advisory Commission on Public Diplomacy is a bipartisan Presidentially appointed panel created by Congress in 1948 to provide oversight of U.S. Government activities intended to understand, inform and influence foreign publics. The Commission reports its findings and recommendations to the President, the Congress and the Secretary of State and the American people. Current Commission members include Barbara M. Barrett of Arizona, who is the Chairman; Harold C. Pachios of Maine; Ambassador Penne Percy Korth of Washington, DC; Ambassador Elizabeth F. Bagley of Washington, DC; Charles ''Tre'' Evers III of Florida; Jay T. Snyder of New York; and Maria Sophia Aguirre of Washington, DC.

Seating is limited. For more information, please contact Leanne Cannon at (202) 203–7880.

Dated: November 24, 2004.

Razvigor Bazala,

(Executive Director Acting) IIP/ACPD, Department of State.

[FR Doc. 04–26505 Filed 11–30–04; 8:45 am]

BILLING CODE 4710–11–P

DEPARTMENT OF STATE

[Public Notice 4894]

Shipping Coordinating Committee; Notice of Meeting

The Shipping Coordinating Committee (SHC) through the Subcommittee on Standards of Training, Certification and Watchkeeping will conduct an open meeting at 9:30 AM on December 21, 2004. The meeting will be held in Room 6319 of the United States Coast Guard Headquarters Building, 2100 Second Street SW, Washington, DC 20593–0001. The purpose of the meeting is to prepare for the 36th session of the International Maritime Organization (IMO) Sub-Committee on Standards of Training and Watchkeeping (STW 36) to be held on January 10–14, 2005, at the IMO Headquarters in London, England.

The primary matters to be considered include:

—Measures to enhance maritime security, training and certification for ship, company and port facility security officers;
—Unlawful practices associated with certificates of competency;
—Large passenger ship safety;
—Training of crew in launching and recovery operations of fast rescue boats and the means of rescue in adverse weather conditions;
—Measures to prevent accidents with lifeboats;
—Education and training requirements for fatigue prevention, mitigation, and management;
—Requirements for knowledge, skills and training for officers on WIG craft; and
—Development of competences for ratings.

Please note that hard copies of documents associated with STW 36 will not be available at this meeting, the documents will be available at the meeting in Adobe Acrobat format on CD–ROM. To request documents before the meeting please write to the address provided below, and include your name, address, phone number, and electronic mail address. Copies of the papers will be sent via electronic mail to the address provided.

Members of the public may attend the meeting up to the seating capacity of the

room. Interested persons may seek information by writing: Luke Harden, U.S. Coast Guard (G–MSO–1), Room 1210, 2100 Second Street SW., Washington, DC 20593–0001 or by calling; (202) 267–0229.

Dated: November 23, 2004.

Clay Diamond,

Executive Secretary, Shipping Coordinating Committee, Department of State.

[FR Doc. 04–26504 Filed 11–30–04; 8:45 am]

BILLING CODE 4710–09–P

DEPARTMENT OF STATE

[Public Notice 4914]

Bureau of Nonproliferation; Imposition of Nonproliferation Measures Against Five Foreign Entities, Including A Ban on U.S. Government Procurement

AGENCY: Department of State.

ACTION: Notice.

SUMMARY: A determination has been made that five entities have engaged in activities that require the imposition of measures pursuant to Section 3 of the Iran Nonproliferation Act of 2000, which provides for penalties on entities for the transfer to Iran since January 1, 1999, of equipment and technology controlled under multilateral export control lists (Missile Technology Control Regime, Australia Group, Chemical Weapons Convention, Nuclear Suppliers Group, Wassenaar Arrangement) or otherwise having the potential to make a material contribution to the development of weapons of mass destruction (WMD) or cruise or ballistic missile systems. The latter category includes (a) items of the same kind as those on multilateral lists, but falling below the control list parameters, when it is determined that such items have the potential of making a material contribution to WMD or cruise or ballistic missile systems, (b) other items with the potential of making such a material contribution, when added through case-by-case decisions, and (c) items on U.S. national control lists for WMD/missile reasons that are not on multilateral lists.

EFFECTIVE DATE: November 24, 2004.

FOR FURTHER INFORMATION CONTACT: On general issues: Vann H. Van Diepen, Office of Chemical, Biological and Missile Nonproliferation, Bureau of Nonproliferation, Department of State (202–647–1142). On U.S. Government procurement ban issues: Gladys Gines, Office of the Procurement Executive, Department of State (703–516–1691).

SUPPLEMENTARY INFORMATION: Pursuant to Sections 2 and 3 of the Iran Nonproliferation Act of 2000 (P.L. 106–178), the U.S. Government determined on November 22, 2004, that the measures authorized in Section 3 of the Act shall apply to the following foreign entities identified in the report submitted pursuant to Section 2(a) of the Act:

Liaoning Jiayi Metals and Minerals Company, Ltd (China) and any successor, sub-unit, or subsidiary thereof;

Q.C. Chen (China);

Wha Cheong Tai Company Ltd (China) and any successor, sub-unit, or subsidiary thereof;

Shanghai Triple International Ltd. (China) and any successor, sub-unit, or subsidiary thereof;

Changgwang Sinyong Corporation (North Korea) and any successor, sub-unit, or subsidiary thereof;

Accordingly, pursuant to the provisions of the Act, the following measures are imposed on these entities:

1. No department or agency of the United States Government may procure, or enter into any contract for the procurement of, any goods, technology, or services from these foreign persons;

2. No department or agency of the United States Government may provide any assistance to the foreign persons, and these persons shall not be eligible to participate in any assistance program of the United States Government;

3. No United States Government sales to the foreign persons of any item on the United States Munitions List (as in effect on August 8, 1995) are permitted, and all sales to these persons of any defense articles, defense services, or design and construction services under the Arms Export Control Act are terminated; and,

4. No new individual licenses shall be granted for the transfer to these foreign persons of items the export of which is controlled under the Export Administration Act of 1979 or the Export Administration Regulations, and any existing such licenses are suspended.

These measures shall be implemented by the responsible departments and agencies of the United States Government and will remain in place for two years from the effective date, except to the extent that the Secretary of State or Deputy Secretary of State may subsequently determine otherwise. A new determination will be made in the event that circumstances change in such a manner as to warrant a change in the duration of sanctions.

Dated: November 24, 2004.

Andrew K. Semmel,

Acting Assistant Secretary of State for Nonproliferation, Department of State.

[FR Doc. 04–26508 Filed 11–30–04; 8:45 am]

BILLING CODE 4710–27–P

DEPARTMENT OF STATE

[Public Notice 4913]

Bureau of Administration; Notice of Availability of Preliminary Alternative Fueled Vehicle (AFV) Report for Fiscal Year 2004

AGENCY: Department of State.

ACTION: Notice.

SUMMARY: The U.S. Department of State, Bureau of Administration, is issuing this notice in order to comply with the Energy Policy Act of 1992 and 42 U.S.C. 13218(b). The purpose of this notice is to announce the public availability of the Department of State's preliminary Fiscal Year 2004 report at the following Web site: *http://www.state.gov/m/a/c8503.htm*.

FOR FURTHER INFORMATION CONTACT: Questions regarding AFV reports on the State Department website should be addressed to the Domestic Fleet Management and Operations Division (A/OPR/GSM/FMO) [Attn: Chappell Garner], 2201 C Street NW (Room B258), Washington, DC 20520, telephone 202–647–3245.

Dated: November 23, 2004.

Vincent J. Chaverini,

Deputy Assistant Secretary Office of Operations, Department of State.

[FR Doc. 04–26507 Filed 11–30–04; 8:45 am]

BILLING CODE 4710–24–P

DEPARTMENT OF TRANSPORTATION

Federal Highway Administration

Environmental Assessment; Finding of No Significant Impact (FONSI): Mount Vernon Circle Parking and Trail Improvements, George Washington Memorial Parkway, Mount Vernon, Fairfax County, VA

AGENCY: Federal Highway Administration (FHWA), DOT.

SUMMARY: The FHWA, in cooperation with the National Park Service (NPS) is issuing a Finding of No Significant Impact (FONSI) for parking, roadway, sidewalks, and multi-use trail improvement at the Mount Vernon Estate and Gardens. These improvements will accommodate current and planned future demand for

parking, remove parking from the Mount Vernon Traffic Circle, and enhance pedestrian, motorist and cyclist safety at the southern end of the George Washington Memorial Parkway located in Mount Vernon, Fairfax County, Virginia.

FOR FURTHER INFORMATION: Jack Van Dop, Technical Specialist, Federal Highway Administration, 21400 Ridgetop Circle, Sterling, VA 20166, Telephone: 703–404–6282, e-mail: *jack.j.vandop@fhwa.dot.gov*.

SUPPLEMENTARY INFORMATION: The FHWA, in cooperation with the NPS, is issuing a FONSI for the preferred alternative as identified in the Environmental Assessment (EA) for Mount Vernon Circle Parking and Trail Improvements for the George Washington Memorial Parkway. This project is located in Mount Vernon, Fairfax County, Virginia and includes expansion of the west parking lot, and extension of the Potomac Heritage National Scenic Trail Segment from the southern end of the Mount Vernon Circle to the existing Mount Vernon Trail east of the Mount Vernon Circle. The purpose of the EA is to record the selection of a preferred alternative and its potential impacts on the environment. The determination as to whether the selected alternative (undertaking) will have (or not have—FONSI) a significant impact on the environment has been made pursuant to the Council on Environmental Quality's regulations (40 CFR 1500) for implementing the National Environmental Policy Act.

The FONSI can be viewed at *http://www.efl.fhwa.dot.gov/planning/nepa/* and *http://www.nps.gov/gwmp/*.

Authority: 23 U.S.C. 315; 49 CFR 1.48.

Issued on: November 19, 2004.

Melisa L. Ridenour,

Division Engineer, Eastern Federal Lands Highway Division, Federal Highway Administration, Sterling, Virginia.

[FR Doc. 04–26501 Filed 11–30–04; 8:45 am]

BILLING CODE 4910–22–P

DEPARTMENT OF TRANSPORTATION

Surface Transportation Board

Release of Waybill Data

The Surface Transportation Board has received a request from the Association of American Railroads (WB463–7, September 3, 2004) for permission to use certain data from the Board's Carload Waybill Samples. A copy of this request may be obtained from the Office of Economics, Environmental Analysis, and Administration.

The waybill sample contains confidential railroad and shipper data; therefore, if any parties object to these requests, they should file their objections with the Director of the Board's Office of Economics, Environmental Analysis, and Administration within 14 calendar days of the date of this notice. The rules for release of waybill data are codified at 49 CFR 1244.9.

Contact: Mac Frampton, (202) 565–1541.

Vernon A. Williams,

Secretary.

[FR Doc. 04–26378 Filed 11–30–04; 8:45 am]

BILLING CODE 4915–01–P

DEPARTMENT OF VETERANS AFFAIRS

[OMB Control No. 2900–New]

Proposed Information Collection Activity: Proposed Collection; Comment Request

AGENCY: Veterans Benefits Administration, Department of Veterans Affairs.

ACTION: Notice.

SUMMARY: The Veterans Benefits Administration (VBA), Department of Veterans Affairs (VA), is announcing an opportunity for public comment on the proposed collection of certain information by the agency. Under the Paperwork Reduction Act (PRA) of 1995, Federal agencies are required to publish notice in the Federal Register concerning each proposed collection of information, including each proposed new collection, and allow 60 days for public comment in response to the notice. This notice solicits comments on information needed to obtain evidence to substantiate claims for service connection post-traumatic stress disorder (PTSD).

DATES: Written comments and recommendations on the proposed collection of information should be received on or before January 31, 2005.

ADDRESSES: Submit written comments on the collection of information to Nancy J. Kessinger, Veterans Benefits Administration (20M35), Department of Veterans Affairs, 810 Vermont Avenue, NW., Washington, DC 20420 or e-mail *irmmnkess@vba.va.gov*. Please refer to ''OMB Control No. 2900–New'' in any correspondence.

FOR FURTHER INFORMATION CONTACT: Nancy J. Kessinger at 9202) 273–7079 or fax (202) 275–5947.

SUPPLEMENTARY INFORMATION: Under the PRA of 1995 (Pub. L. 104–13; 44 U.S.C. 3501–3521), Federal agencies must obtain approval from the Office of Management and Budget (OMB) for each collection of information they conduct or sponsor. This request for comment is being made pursuant to section 3506(c)(2)(A) of the PRA.

With respect to the following collection of information, VBA invites comments on: (1) Whether the proposed collection of information is necessary for the proper performance of VBA's functions, including whether the information will have practical utility; (2) the accuracy of VBA's estimate of the burden of the proposed collection of information; (3) ways to enhance the quality, utility, and clarity of the information to be collected; and (4) ways to minimize the burden of the collection of information on respondents, including through the use of automated collection techniques or the use of other forms of information technology.

Titles:

a. Statement in Support of Claim for Service Connection for Post-Traumatic Stress Disorder (PTSD), VA Form 21–0781.

b. Statement in Support of Claim for Service Connection for Post-Traumatic Stress Disorder (PTSD) Secondary to Personal Assault, VA Form 21–0781a.

OMB Control Number: 2900–New.

Type of Review: New Collection.

Abstract: VA Forms 21–0781 and 21–0781a are used to assist claimants in obtaining evidence to substantiate their claims of in-service stressors. When a veteran who did not serve in combat or was not a prisoner of war claims post-traumatic stress disorder due to in-service stressors, there must be credible supporting evidence that the claimed stressors occurred. The claimant must provide a medical diagnosis; a link established by medical evidence, between current symptoms and an in-service stressor; and credible supporting evidence that the claimed in-service strssor occurred.

Affected Public: Individuals or households.

Estimated Annual Burden: 17,780 hours.

Estimated Average Burden Per Respondent: 70 minutes.

Frequency of Response: One-time.

Estimated Number of Respondents: 15,240.

Dated: November 22, 2004.

By direction of the Secretary.

Loise Russell,

Director, Records Management Service.

[FR Doc. 04–26461 Filed 11–30–04; 8:45 am]

BILLING CODE 8320–01–M

DEPARTMENT OF VETERANS AFFAIRS

[OMB Control No. 2900–New]

Proposed Information Collection Activity: Proposed Collection; Comment Request

AGENCY: Veterans Benefits Administration, Department of Veterans Affairs.

ACTION: Notice.

SUMMARY: The Veterans Benefits Administration (VBA), Department of Veterans Affairs (VA), is announcing an opportunity for public comment on the proposed collection of certain information by the agency. Under the Paperwork Reduction Act (PRA) of 1995, Federal agencies are required to publish notice in the **Federal Register** concerning each proposed collection of information, including each proposed new collection, and allow 60 days for public comment in response to the notice. This notice solicits comments on information needed to establish contact with a fiduciary, beneficiary, claimant, or witness when field examination is necessary.

DATES: Written comments and recommendations on the proposed collection of information should be received on or before January 31, 2005.

ADDRESSES: Submit written comments on the collection of information to Nancy J. Kessinger, Veterans Benefits Administration (20M35), Department of Veterans Affairs, 810 Vermont Avenue, NW., Washington, DC 20420 or e-mail *irmnkess@vba.va.gov*. Please refer to ''OMB Control No. 2900–New'' in any correspondence.

FOR FURTHER INFORMATION CONTACT: Nancy J. Kessinger at (202) 273–7079 or fax (202) 275–5947.

SUPPLEMENTARY INFORMATION: Under the PRA of 1995 (Pub. L. 104–13; 44 U.S.C. 3501–3521), Federal agencies must obtain approval from the Office of Management and Budget (OMB) for each collection of information they conduct or sponsor. This request for comment is being made pursuant to Section 3506(c)(2)(A) of the PRA.

With respect to the following collection of information, VBA invites comments on: (1) Whether the proposed collection of information is necessary for the proper performance of VBA's functions, including whether the information will have practical utility; (2) the accuracy of VBA's estimate of the burden of the proposed collection of information; (3) ways to enhance the quality, utility, and clarity of the information to be collected; and (4) ways to minimize the burden of the collection of information on respondents, including through the use of automated collection techniques or the use of other forms of information technology.

Title: Request for Contact Information, VA Form 21–30.

OMB Control Number: 2900–New.

Type of Review: New collection.

Abstract: VA Form 21–30 is used to locate a fiduciary, beneficiary, claimant, or witness when a field examination is necessary in order to gather information that is needed to maintain program integrity. The form is used when contact information cannot be obtained by other means or when travel funds may be significantly impacted in cases where the individual resides in a remote location and has a history of not being during the day or when visited.

Affected Public: Individuals or households.

Estimated Annual Burden: 1,250 hours.

Estimated Average Burden Per Respondent: 30 minutes.

Frequency of Response: One-time.

Estimated Number of Respondents: 5,000.

Dated: November 22, 2004.

By direction of the Secretary.

Loise Russell,

Director, Records Management Service.

[FR Doc. 04–26462 Filed 11–30–04; 8:45 am]

BILLING CODE 8320–01–P

DEPARTMENT OF VETERANS AFFAIRS

[OMB Control No. 2900–0009]

Proposed Information Collection Activity: Proposed Collection; Comment Request

AGENCY: Veterans Benefits Administration, Department of Veterans Affairs.

ACTION: Notice.

SUMMARY: The Veterans Benefits Administration (VBA), Department of Veterans Affairs (VA), is announcing an opportunity for public comment on the proposed collection of certain information by the agency. Under the Paperwork Reduction Act (PRA) of 1995, Federal agencies are required to publish notice in the **Federal Register** concerning each proposed collection of information, including each proposed revision of a currently approved collection and allow 60 days for public comment in response to the notice. This notice solicits comments for information needed to determine a veteran's eligibility for vocational rehabilitation benefits.

DATES: Written comments and recommendations on the proposed collection of information should be received on or before January 31, 2005.

ADDRESSES: Submit written comments on the collection of information to Nancy J. Kessinger, Veterans Benefits Administration (20M35), Department of Veterans Affairs, 810 Vermont Avenue, NW., Washington, DC 20420 or e-mail *irmnkess@vba.va.gov*. Please refer to ''OMB Control No. 2900–0009'' in any correspondence.

FOR FURTHER INFORMATION CONTACT: Nancy J. Kessinger at (202) 273–7079 or fax (202) 275–5947.

SUPPLEMENTARY INFORMATION: Under the PRA of 1995 (Pub. L. 104–13; 44 U.S.C. 3501–3521), Federal agencies must obtain approval from the Office of Management and Budget (OMB) for each collection of information they conduct or sponsor. This request for comment is being made pursuant to Section 3506(c)(2)(A) of the PRA.

With respect to the following collection of information, VBA invites comments on: (1) Whether the proposed collection of information is necessary for the proper performance of VBA's functions, including whether the information will have practical utility; (2) the accuracy of VBA's estimate of the burden of the proposed collection of information; (3) ways to enhance the quality, utility, and clarity of the information to be collected; and (4) ways to minimize the burden of the collection of information on respondents, including through the use of automated collection techniques or the use of other forms of information technology.

Title: Disabled Veterans Application For Vocational Rehabilitation (Chapter 31, Title 38 U.S.C.), VA Form 28–1900.

OMB Control Number: 2900–0009.

Type of Review: Revision of a currently approved collection.

VA Form 28–1900 to apply for vocational rehabilitation benefits. The information collected is used to determine a claimant's eligibility for benefits.

Affected Public: Individuals or households.

Estimated Annual Burden: 16,961 hours.

Estimated Average Burden Per Respondent: 15 minutes.

Frequency of Response: On Occasion.

Estimated Number of Respondents: 67,844.

Dated: November 22, 2004.

By direction of the Secretary.

Loise Russell,

Director, Records Management Service.

[FR Doc. 04–26463 Filed 11–30–04; 8:45 am]

BILLING CODE 8320–01–P

DEPARTMENT OF VETERANS AFFAIRS

[OMB Control No. 2900–0114]

Proposed Information Collection Activity: Proposed Collection; Comment Request

AGENCY: Veterans Benefits Administration, Department of Veterans Affairs.

ACTION: Notice.

SUMMARY: The Veterans Benefits Administration (VBA), Department of Veterans Affairs (VA), is announcing an opportunity for public comment on the proposed collection of certain information by the agency. Under the Paperwork Reduction Act (PRA) of 1995, Federal agencies are required to publish notice in the **Federal Register** concerning each proposed collection of information, including each proposed revision of a currently approved collection, and allow 60 days for public comment in response to this notice. This notice solicits comments on the information needed to determine the validity of a common law marriage.

DATES: Written comments and recommendations on the proposed collection of information should be received on or before January 31, 2005.

ADDRESSES: Submit written comments on the collection of information to Nancy J. Kessinger, Veterans Benefits Administration (20M35), Department of Veterans Affairs, 810 Vermont Avenue, NW., Washington, DC 20420 or e-mail: *irmnkess@vba.va.gov*. Please refer to ''OMB Control No. 2900–0114'' in any correspondence.

FOR FURTHER INFORMATION CONTACT: Nancy J. Kessinger at (202) 273–7079 or FAX (202) 275–5947.

SUPPLEMENTARY INFORMATION: Under the PRA of 1995 (Pub. L. 104–13; 44 U.S.C., 3501–3520), Federal agencies must obtain approval from the Office of Management and Budget (OMB) for each collection of information they conduct or sponsor. This request for comment is being made pursuant to section 3506(c)(2)(A) of the PRA.

With respect to the following collection of information, VBA invites comments on: (1) Whether the proposed collection of information is necessary for the proper performance of VBA's functions, including whether the information will have practical utility; (2) the accuracy of VBA's estimate of the burden of the proposed collection of information; (3) ways to enhance the quality, utility, and clarity of the information to be collected; and (4) ways to minimize the burden of the collection of information on respondents, including through the use of automated collection techniques or the use of other forms of information technology.

Title: Statement of Marital Relationship, VA Form 21–4170.

OMB Control Number: 2900–0114.

Type of Review: Revision of a currently approved collection.

Abstract: Persons claiming to be common law widows/widowers of deceased veterans and veterans and their claimed common law spouses complete VA Form 21–4170 to establish marital status. VA uses the information collected to determine whether the common law marriage was valid under the law of the place where the parties resided at the time of the marriage or under the law of the place where the parties resided when the right to benefits accrued.

Affected Public: Individuals or households.

Estimated Annual Burden: 2,708 hours.

Estimated Average Burden Per Respondent: 25 minutes.

Frequency of Response: On occasion.

Estimated Number of Respondents: 6,500.

Dated: November 22, 2004.

By direction of the Secretary.

Loise Russell,

Director, Records Management Service.

[FR Doc. 04–26464 Filed 11–30–04; 8:45 am]

BILLING CODE 8320–01–P

DEPARTMENT OF VETERANS AFFAIRS

[OMB Control No. 2900–0621]

Proposed Information Collection Activity: Proposed Collection; Comment Request

AGENCY: Veterans Health Administration, Department of Veterans Affairs.

ACTION: Notice.

SUMMARY: The Veterans Health Administration (VHA) is announcing an opportunity for public comment on the proposed collection of certain information by the agency. Under the Paperwork Reduction Act (PRA) of 1995, Federal agencies are required to publish notice in the **Federal Register** concerning each proposed collection of information, including each proposed extension of a currently approved collection, and allow 60 days for public comment in response to the notice. This notice solicits comments on information needed to consider if a medical malpractice payment is related to substandard care, professional incompetence or professional misconduct on the part of a physician, dentist, or other health care practitioner.

DATES: Written comments and recommendations on the proposed collection of information should be received on or before January 31, 2005.

ADDRESSES: Submit written comments on the collection of information to Ann Bickoff, Veterans Health Administration (193E1), Department of Veterans Affairs, 810 Vermont Avenue, NW., Washington, DC 20420 or e-mail *ann.bickoff@mail.va.gov*. Please refer to ''OMB Control No. 2900–0621'' in any correspondence.

FOR FURTHER INFORMATION CONTACT: Ann Bickoff at (202) 273–8310.

SUPPLEMENTARY INFORMATION: Under the PRA of 1995 (Pub. L. 104–13; 44 U.S.C. 3501–3521), Federal agencies must obtain approval from the Office of Management and Budget (OMB) for each collection of information they conduct or sponsor. This request for comment is being made pursuant to Section 3506(c)(2)(A) of the PRA.

With respect to the following collection of information, VHA invites comments on: (1) Whether the proposed collection of information is necessary for the proper performance of VHA's functions, including whether the information will have practical utility; (2) the accuracy of VHA's estimate of the burden of the proposed collection of information; (3) ways to enhance the quality, utility, and clarity of the information to be collected; and (4) ways to minimize the burden of the collection of information on respondents, including through the use of automated collection techniques or the use of other forms of information technology.

Title: National Practitioner Data Bank Regulations.

OMB Control Number: 2900–0621.

Type of Review: Extension of a currently approved collection.

Abstract: The National Practitioner Data Bank was established for the purpose of collecting and releasing

certain information concerning physicians, dentists, and other licensed health care practitioners. VA will obtain information from the National Practitioner Data Bank concerning physicians, dentists, and other licensed health care practitioners who provide or seek to provide health care services at VA facilities and report information regarding malpractice payments and adverse clinical privileges action to the National Practitioner Data Bank.

Affected Public: Individuals or households.

Estimated Total Annual Burden: 1,750 hours.

Estimated Average Burden Per Respondent: 5 hours.

Frequency of Response: One time.

Estimated Number of Respondents: 350.

Dated: November 22, 2004.

By direction of the Secretary.

Loise Russell,

Director, Records Management Service.

[FR Doc. 04–26465 Filed 11–30–04; 8:45 am]

BILLING CODE 8320–01–P

DEPARTMENT OF VETERANS AFFAIRS

[OMB Control No. 2900–New]

Proposed Information Collection Activity: Proposed Collection; Comment Request

AGENCY: Veterans Health Administration, Department of Veterans Affairs.

ACTION: Notice.

SUMMARY: The Veterans Health Administration (VHA) is announcing an opportunity for public comment on the proposed collection of certain information by the agency. Under the Paperwork Reduction Act (PRA) of 1995, Federal agencies are required to publish notice in the **Federal Register** concerning each proposed collection of information, including each new collection, and allow 60 days for public comment in response to the notice. This notice solicits comments on information needed to file a civil rights discrimination complaint.

DATES: Written comments and recommendations on the proposed collection of information should be received on or before January 31, 2005.

ADDRESSES: Submit written comments on the collection of information to Ann Bickoff, Veterans Health Administration (193E1), Department of Veterans Affairs, 810 Vermont Avenue, NW., Washington, DC 20420 or e-mail *ann.bickoff@mail.va.gov*. Please refer to ''OMB Control No. 2900–New'' in any correspondence.

FOR FURTHER INFORMATION CONTACT: Ann Bickoff at (202) 273–8310.

SUPPLEMENTARY INFORMATION: Under the PRA of 1995 (Pub. L. 104–13; 44 U.S.C. 3501–3521), Federal agencies must obtain approval from the Office of Management and Budget (OMB) for each collection of information they conduct or sponsor. This request for comment is being made pursuant to section 3506(c)(2)(A) of the PRA.

With respect to the following collection of information, VHA invites comments on: (1) Whether the proposed collection of information is necessary for the proper performance of VHA's functions, including whether the information will have practical utility; (2) the accuracy of VHA's estimate of the burden of the proposed collection of information; (3) ways to enhance the quality, utility, and clarity of the information to be collected; and (4) ways to minimize the burden of the collection of information on respondents, including through the use of automated collection techniques or the use of other forms of information technology.

Title: Civil Rights Discrimination Complaint, VA Form 10–0381.

OMB Control Number: 2900–New.

Type of Review: New collection.

Abstract: VA Form 10–0381 is completed by veterans and other VHA customers who believe their civil rights were discriminated by agency employees while receiving medical care or services in VA medical centers, or institutions such as state homes receiving federal financial assistance from VA to file a formal complaint of the alleged discrimination.

Affected Public: Individuals or households.

Estimated Total Annual Burden: 46 hours.

Estimated Average Burden Per Respondent: 15 minutes.

Frequency of Response: On occasion.

Estimated Number of Respondents: 183.

Dated: November 22, 2004.

By direction of the Secretary.

Loise Russell,

Director, Records Management Service.

[FR Doc. 04–26466 Filed 11–30–04; 8:45 am]

BILLING CODE 8320–01–P

DEPARTMENT OF VETERANS AFFAIRS

[OMB Control No. 2900–0653]

Proposed Information Collection Activity: Proposed Collection; Comment Request

AGENCY: Veterans Health Administration, Department of Veterans Affairs.

ACTION: Notice.

SUMMARY: The Veterans Health Administration (VHA), Department of Veterans Affairs (VA), is announcing an opportunity for public comment on the proposed collection of certain information by the agency. Under the Paperwork Reduction Act (PRA) of 1995, Federal agencies are required to publish notice in the **Federal Register** concerning each proposed collection of information, including each proposed extension of a currently approved collection, and allow 60 days for public comment in response to the notice. This notice solicits comments for information to determine how veterans want to receive information about bio-terrorism.

DATES: Written comments and recommendations on the proposed collection of information should be received on or before January 31, 2005.

ADDRESSES: Submit written comments on the collection of information to Ann W. Bickoff, Veterans Health Administration (193E1), Department of Veterans Affairs, 810 Vermont Avenue, NW., Washington, DC 20420 or e-mail *ann.bickoff@hq.med.va.gov*. Please refer to ''OMB Control No. 2900–0653'' in any correspondence.

FOR FURTHER INFORMATION CONTACT: Ann W. Bickoff (202) 273–8310 or FAX (202) 273–9381.

SUPPLEMENTARY INFORMATION: Under the PRA of 1995 (Pub. L. 104–13; 44 U.S.C. 3501–3521), Federal agencies must obtain approval from the Office of Management and Budget (OMB) for each collection of information they conduct or sponsor. This request for comment is being made pursuant to section 3506(c)(2)(A) of the PRA.

With respect to the following collection of information, VHA invites comments on: (1) Whether the proposed collection of information is necessary for the proper performance of VHA's functions, including whether the information will have practical utility; (2) the accuracy of VHA's estimate of the burden of the proposed collection of information; (3) ways to enhance the quality, utility, and clarity of the information to be collected; and (4) ways to minimize the burden of the

collection of information on respondents, including through the use of automated collection techniques or the use of other forms of information technology.

Title: Veterans Survey on Bio-terrorism, VA Form 10–21074(NR).

OMB Control Number: 2900–0653.

Type of Review: Extension of a currently approved collection.

Abstract: The Department of Veterans Affairs in response to PL 107–188, ''Public Health Security and Bio-terrorism Preparedness and Response Act of 2002'' will conduct a survey to evaluate how veterans obtained information about bio-terrorism in the past, or how they wish to obtain information in the future; their knowledge about the three different types of potential biological agents; their attitudes and perceptions related to experiencing and surviving a bio-terrorism attack in the future as well as their confidence in the role VA will play in the event of a bio-terrorism act, behavioral disposition and anxiety/anger over a future event and with respect to any educational material received on bio-terrorism. The survey will be used to determine the number of veterans who receive benefits but do not use the health care facilities and would use VA facilities as their primary source of health care in the event a future bio-terrorism incident.

Affected Public: Individuals or households.

Estimated Annual Burden: 1,760 hours.

Estimated Average Burden Per Respondent: 27 minutes.

Frequency of Response: Twice.

Estimated Number of Respondents: 7,382.

Dated: November 22, 2004.

By direction of the Secretary.

Loise Russell,

Director, Records Management Service.

[FR Doc. 04–26467 Filed 11–30–04; 8:45 am]

BILLING CODE 8320–01–P

Federal Register

Wednesday,
December 1, 2004

Part II

Department of Agriculture

Agricultural Marketing Service

7 CFR Part 929

Cranberries Grown in the States of Massachusetts, et al.; Secretary's Decision and Referendum Order on Proposed Amendment of Marketing Agreement and Order No. 929; Proposed Rule

DEPARTMENT OF AGRICULTURE

Agricultural Marketing Service

7 CFR Part 929

[Docket Nos. AO–341–A6; FV02–929–1A]

Cranberries Grown in the States of Massachusetts, et al.; Secretary's Decision and Referendum Order on Proposed Amendment of Marketing Agreement and Order No. 929

AGENCY: Agricultural Marketing Service, USDA.

ACTION: Proposed rule and referendum order.

SUMMARY: This decision proposes amendments to the marketing agreement and order for cranberries grown in Massachusetts, Rhode Island, Connecticut, New Jersey, Wisconsin, Michigan, Minnesota, Oregon, Washington, and Long Island in the State of New York, and provides growers and processors with the opportunity to vote in a referendum to determine if they favor the changes. The amendments are based on those proposed by the Cranberry Marketing Committee (Committee), which is responsible for local administration of the order and other interested parties representing cranberry growers and handlers. The amendments would: Revise the volume control provisions; add authority for paid advertising; authorize the Committee to reestablish districts within the production area and reapportion grower membership among the various districts; clarify the definition of handle; and incorporate administrative changes. The proposed amendments are intended to improve the operation and functioning of the cranberry marketing order program.

DATES: The referendum will be conducted from December 13 to December 27, 2004. The representative period for the purpose of the referendum is September 1, 2003, through August 31, 2004.

FOR FURTHER INFORMATION CONTACT: Kathleen M. Finn, Marketing Order Administration Branch, Fruit and Vegetable Programs, AMS, USDA, 1400 Independence Avenue, SW STOP 0237, Washington, DC 20250–0237; telephone: (202) 720–2491, or Fax: (202) 720–8938. Small businesses may request information on compliance with this regulation by contacting Jay Guerber, Marketing Order Administration Branch, Fruit and Vegetable Programs, AMS, USDA, 1400 Independence Avenue, SW STOP 0237, Washington, DC 20250–0237; telephone (202) 720–2491; Fax (202) 720–8938.

SUPPLEMENTARY INFORMATION: Prior documents in this proceeding: Notice of Hearing issued on April 23, 2002, and published in the May 1, 2002, issue of the **Federal Register** (67 FR 21854); Secretary's Decision on partial amendments issued on December 4, 2003, and published in the December 12 issue of the **Federal Register** (68 FR 69343); Final order amending order on partial amendments issued on April 5, 2004, and published in the April 9 issue of the **Federal Register** (69 FR 18803); and Recommended Decision on remainder of amendments issued on April 21, 2004, and published in the April 28 issue of the **Federal Register** (69 FR 23330).

This administrative action is governed by the provisions of sections 556 and 557 of Title 5 of the United States Code and, therefore, is excluded from the requirements of Executive Order 12866.

Preliminary Statement

The proposed amendments were formulated based on the record of a public hearing held in Plymouth, Massachusetts on May 20 and 21, 2002; in Bangor, Maine on May 23, 2002; in Wisconsin Rapids, Wisconsin on June 3 and 4, 2002; and in Portland, Oregon on June 6, 2002. The hearing was held to consider the proposed amendment of Marketing Agreement and Order No. 929, regulating the handling of cranberries grown in the States of Massachusetts, Rhode Island, Connecticut, New Jersey, Wisconsin, Michigan, Minnesota, Oregon, Washington, and Long Island in the State of New York, hereinafter referred to collectively as the ''order.'' The hearing was held pursuant to the provisions of the Agricultural Marketing Agreement Act of 1937, as amended (7 U.S.C. 601 *et seq.*), hereinafter referred to as the ''Act,'' and the applicable rules of practice and procedure governing the formulation of marketing agreements and marketing orders (7 CFR Part 900). The notice of hearing contained numerous proposals submitted by the Committee, other interested parties and one proposed by the Agricultural Marketing Service (AMS). A final order on 6 of the proposals determined necessary to be expedited was published in the **Federal Register** on April 9, 2004. A recommended decision on the remainder of the proposals was published in the **Federal Register** on April 28, 2004. This action sets forth the Secretary's decision and referendum order on the remaining amendments.

The proposed amendments included in this proceeding would: Authorize the Committee to reestablish districts within the production area and reapportion grower membership among the various districts; Simplify criteria considered and set forth more appropriate dates in establishing the Committee's marketing policy; Revise the formula for calculating sales histories under the producer allotment program in § 929.48; Allow compensation of sales history for catastrophic events that impact a grower's crop; Remove specified dates relating to when information is required to be filed by growers/handlers in order to issue annual allotments; Clarify how the Committee allocates unused allotment to handlers; Allow growers who decide not to grow a crop flexibility in deciding what to do with their allotment; Allow growers to transfer allotment during a year of volume regulation; Authorize the implementation of the producer allotment and withholding programs in the same year; Require specific dates for recommending volume regulation; Add specific authority to exempt fresh, organic or other forms of cranberries from order provisions; Allow for greater flexibility in establishing other outlets for excess cranberries; Update and streamline the withholding volume control provisions; Modify the buy-back provisions under the withholding volume control provisions; Add authority for paid advertising under the research and development provision of the order; Modify the definition of handle to clarify that transporting fresh cranberries to foreign countries is considered handling and include the temporary cold storage or freezing of withheld cranberries as an exemption from handling; Relocate some reporting provisions to a more suitable provision and streamline the language relating to verification of reports and records; and Delete an obsolete provision from the order relating to preliminary regulation.

The Fruit and Vegetable Programs of AMS proposed to allow such changes as may be necessary to the order, if any of the proposed amendments are adopted, so that all of the order's provisions conform to the effectuated amendments.

Four proposed amendments were not recommended for adoption.

Upon the basis of evidence introduced at the hearing and the record thereof, the Administrator of AMS on April 21, 2004, filed with the Hearing Clerk, U.S. Department of Agriculture, a Recommended Decision and Opportunity to File Written Exceptions thereto by May 28, 2004. On June 2, 2004, the time period for filing written exceptions was extended until June 30, 2004.

Seven exceptions were filed during the period provided. The exceptions

were filed by: The Cranberry Marketing Committee (CMC), Wareham, Massachusetts; Cape Cod Cranberry Growers' Association (CCCGA), East Wareham, Massachusetts; Wisconsin State Cranberry Growers' Association (WSCGA), Wisconsin Rapids, Wisconsin; Clement Pappas and Co., Inc. (Clement Pappas), Seabrook, New Jersey; John C. Decas (John Decas), Wareham, Massachusetts; and two exceptions were filed by Ocean Spray Cranberries, Inc. (OSC), Lakeville/Middleboro, Massachusetts. The exceptions filed by Ocean Spray Cranberries were identical comments but signed by different representatives. This exception will be considered as one. The specifics of the exceptions are discussed in the Findings and Conclusions; Discussion of Exceptions section of this document.

Proposals Being Recommended in This Decision

The proposal to authorize the Committee to reestablish districts within the production area and reapportion grower membership among the various districts would amend § 929.28.

The proposal to simplify criteria and dates in establishing the Committee's marketing policy would amend § 929.46.

The proposal to revise the formula for calculating sales histories under the producer allotment program and the proposal to allow compensation of sales history for catastrophic events that impact a grower's crop would amend § 929.48.

The proposal to remove dates for information collection for issuing annual allotments, the proposal to clarify the allocation of unused allotment and the proposal to allow growers to not assign their allotment if they do not grow a crop would amend § 929.49.

The proposal to allow growers to transfer allotment would amend § 929.50.

The proposal to authorize the withholding and producer allotment programs in the same year would amend § 929.52.

The proposal to require the Committee to recommend volume regulations by specific dates would amend § 929.51.

The proposal to add authority for exempting fresh and organic cranberries would amend § 929.58.

The proposal to allow more flexibility in establishing other outlets for excess cranberries would amend § 929.61.

The proposal to streamline the withholding provisions would amend § 929.54.

The proposal to modify the buy-back provisions under the withholding program would amend § 929.56.

The proposal to add authority for paid advertising under the research and development provision of the order would amend § 929.45.

The proposal to modify the definition of handle would amend § 929.10.

The proposal to streamline and relocate reporting provisions to a more appropriate provision of the order would amend §§ 929.62 and 929.64.

The proposal to delete an obsolete provision would remove § 929.47.

Proposals Not Recommended for Adoption in This Decision

The proposal to add a new § 929.47 to include a handler marketing pool or buy-back under the producer allotment program is not being recommended for adoption.

The proposal to allow the first 1,000 barrels of each grower's production to be exempt from regulations under the order is not being recommended for adoption.

The proposal to amend § 929.4 to expand the production area to include the States of Maine, Delaware and the entire State of New York is not being recommended for adoption.

The proposal to amend 929.5 to revise the definition of ''cranberries'' is not being recommended for adoption.

Small Business Considerations

Pursuant to the requirements set forth in the Regulatory Flexibility Act (RFA), AMS has considered the economic impact of this action on small entities. Accordingly, AMS has prepared this final regulatory flexibility analysis.

The purpose of the RFA is to fit regulatory actions to the scale of business subject to such actions so that small businesses will not be unduly or disproportionately burdened. Marketing orders and amendments thereto are unique in that they are normally brought about through group action of essentially small entities for their own benefit. Thus, both the RFA and the Act are compatible with respect to small entities.

Small agricultural producers have been defined by the Small Business Administration (SBA) (13 CFR 121.201) as those having annual receipts of less than $750,000. Small agricultural service firms, which include handlers regulated under the order, are defined as those with annual receipts of less than $5,000,000.

Interested persons were invited to present evidence at the hearing on the probable regulatory and informational impact of the proposed amendments on small businesses. The record indicates that these amendments could result in additional regulatory requirements being imposed on some cranberry growers and handlers. Overall benefits are expected to exceed costs.

The record indicates that there are about 20 handlers currently regulated under Marketing Order No. 929. In addition, the record indicates that there are about 1,250 producers of cranberries in the current production area.

Based on recent years' price and sales levels, AMS finds that nearly all of the cranberry producers and some of the handlers are considered small under the SBA definition. In 2001, a total of 34,300 acres were harvested with an average U.S. yield per acre of 156.2 barrels. Grower prices in 2001 averaged $22.90 per barrel. Using these figures, average total annual grower receipts for 2001 are estimated at $153,375 per grower. However, there are some growers whose estimated sales would exceed the $750,000 threshold. Thus, the consequences of this decision would apply almost exclusively to small entities.

Five handlers handle over 97 percent of the cranberry crop. Using Committee data on volumes handled, AMS has determined that none of these handlers qualify as small businesses under SBA's definition. The remainder of the crop is marketed by about a dozen grower-handlers who handle their own crops. Dividing the remaining 3 percent of the crop by these grower-handlers, all would be considered small businesses.

This decision proposes that the order be amended: (1) To authorize the Committee to reestablish districts within the production area and reapportion grower membership among the various districts; (2) To simplify criteria considered and set forth more appropriate dates in establishing the Committee's marketing policy; (3) To revise the formula for calculating sales histories under the producer allotment program in § 929.48, which includes providing additional sales history to compensate growers for expected production on younger acres. This proposed changed to § 929.48 would also allow for more flexibility in recommending changes to the formula and add authority for segregating fresh and processed sales; (4) To allow compensation of sales history for catastrophic events that impact a grower's crop; (5) To remove specified dates relating to when information is required to be filed by growers/handlers in order to issue annual allotments; (6) To clarify how the Committee allocates

unused allotment to handlers; (7) To allow growers to decide whether to assign allotment if no crop is produced; (8) To allow growers to transfer allotment during a year of volume regulation; (9) To authorize the implementation of the producer allotment and withholding programs in the same year; (10) To set dates by which volume regulations must be recommended; (11) To add specific authority to exempt fresh, organic or other forms of cranberries from order provisions; (12) To allow for greater flexibility in establishing other outlets for excess cranberries; (13) To update and streamline the withholding volume control provisions; (14) To modify the withholding volume regulations by allowing growers to be compensated under the buy-back provisions if any funds are returned to the handler by the Committee; (15) To add authority for paid advertising under the research and development provision of the order; (16) To modify the definition of handle to clarify that transporting fresh cranberries to foreign countries is considered handling and include the temporary cold storage or freezing of withheld cranberries as an exemption from handling; (17) To relocate some reporting provisions to a more suitable provision and streamline the language relating to verification of reports and records; and (18) To delete an obsolete provision from the order relating to preliminary regulation.

This decision does not recommend for adoption the following proposed amendments: (1) To incorporate a handler marketing pool or buy-back provisions under the producer allotment program; (2) To authorize an exemption from order provisions for the first 1,000 barrels of cranberries produced by each grower; (3) To add Maine, Delaware and the entire State of New York to the production area; (4) To add the species Vaccinium oxycoccus to the definition of cranberry.

Historical Trends and Near Term Outlook

The cranberry industry has operated under a Federal marketing order since 1962. For many years, the industry enjoyed increasing demand for cranberry products, primarily due to the success of cranberry juice-based drinks. This situation encouraged additional production. Between 1960 and 1999, production increased from 1.34 million barrels (one barrel equals 100 pounds of cranberries) to a record 6.3 million barrels. This represents a 370 percent increase from 1960 and a 17-percent gain from the 1998 crop year. Production in the 2000 crop year declined to 5.6 million barrels and to 5.4 million barrels in 2001, due to the use of volume control by the industry and a decrease in yields in some production areas due to adverse weather conditions during the growing season.

Production increased for each of the five major producing States from 1960 to 2001. In 1995, Wisconsin surpassed Massachusetts to become the largest producing State. Production in all States is highly variable. This variation in production is mainly due to the variation in yields, which is influenced by weather in each of the producing States. The variation in production is one of the primary reasons the industry likes to carry out a reasonable volume of inventory into the next crop year to insure against a short crop.

Cranberries are produced in at least 10 States, but the vast majority of farms and production are concentrated in Massachusetts, New Jersey, Oregon, Washington, and Wisconsin. Area harvested for the U.S. has increased from 21,140 acres in 1960 to 34,300 acres in 2001. Most of this increase has come from Wisconsin, where area harvested has increased from 4,200 acres in 1960 to 15,100 acres in 2001. Currently, Wisconsin has the highest amount of area harvested at 15,100 acres, followed by Massachusetts with 12,200, New Jersey with 3,100 acres, Oregon with 2,300 acres, and Washington with 1,600 acres. Total U.S. area harvested has declined from a peak of 37,500 in 1999 to 34,300 acres in 2001. This decline is likely due to the surplus situation the industry has experienced over the last several crop years. Massachusetts has traditionally had the largest area harvested. However, in 1998, Wisconsin became the State with the largest area harvested. Since 1998, Wisconsin area harvested has continued to increase, while Massachusetts area harvested has declined. Together, both States account for over 80 percent of cranberry production.

Average farm size for cranberry production is very small. The average across all producing States is about 27 acres. Wisconsin's average is twice the U.S. average, at 56 acres, and New Jersey averages 66 acres. Average farm size is below the U.S. average for Massachusetts (20 acres), Oregon (13 acres) and Washington (11 acres).

Yields are highly variable from year to year and yields have been increasing over time. For the U.S., yields have more than doubled from the 1960's to the 2000's. Increasing yields suggest that cranberry growers have become more productive. Over the last five crop years (1997–2001), Wisconsin has had the highest yield at 185.9 barrels per acre, followed by New Jersey with an average yield of 154.0 barrels per acre, then Oregon with an average yield of 151.2 barrels per acres, then Massachusetts with an average yield of 133.2 barrels per acre, and then Washington with an average yield of 104.1 barrels per acre.

While production capacity continues to rise, demand has leveled off. Per capita consumption of fresh cranberries has remained stable ranging from 0.07 to 0.10 pounds per person. The per capita consumption of processed cranberries increased to 1.70 pounds per person in 1994. In 1994, total domestic production was 4,682,000 barrels, while total sales increased to 4,692,507 barrels. This increase in sales and per capita consumption, accompanied by increasing grower prices provided further incentives for growers to increase plantings and productivity. However, after 1994, sales of processed cranberries began to stagnate. Stagnant sales of processed cranberry products continued until 2000. In the 2000 crop year, per capita consumption of processed cranberries increased to 1.87 pounds and sales of processed cranberries increased to over 5 million barrels for the first time.

About 92 percent of the cranberry crop is processed, with the remainder sold as fresh fruit. In the 1950's and early 1960's, fresh production was considerably higher than it is today, and in many years, constituted as much as 25 to 50 percent of total production. Fresh production began to decline in the 1980's, while processed utilization and output soared as cranberry juice products became popular. Today, fresh fruit claims only about 8 percent of total production. Three of the top five States produce cranberries for fresh sales. New Jersey and Oregon produce fruit for processed products only. There has been tremendous growth in processed cranberries, while the fresh market has remained relatively stable.

When supply is greater than demand, inventories are carried over into the next crop year. Carryin inventories are reported by the Committee. In many agricultural industries, modest levels of inventories are believed to be desirable in situations of a late harvest or a disastrous production year. From 1987 through 1997, annual carryin inventories were relatively stable, averaging 1.1 million barrels. Beginning with the 1998 crop, carryin inventories exceeded 2 million barrels. For the 2000 crop year, carryin inventories exceeded 4 million barrels. Large and increasing inventories provide an indication of how far supply is outpacing demand. Larger inventories, beginning in 1997,

have resulted in prices paid to growers dropping dramatically.

From 1974 through 1996, prices trended up. Prices increased from $11.00 per barrel in 1974 to $65.90 per barrel in 1996. Since 1996, prices have decreased. Prices reached a recent low of $17.20 per barrel in 1999. In 2001, prices are reported at $22.90 per barrel. The period of increasing prices provided an incentive for producers to expand planted acres and to increase yields. The price decline over the past several crop years is due to the surplus situation which resulted from the increase in planted acreage and yields and the lack of significant sales increases to keep pace with increased production.

Grower prices do not vary greatly among the five major producing States. This provides an indication that domestic market forces similarly impact all U.S. cranberry growers. Further evidence that prices for the five producing States follow very similar movements is provided by computing the correlation coefficient for the five producing States from 1960 to 2001. Correlation is a statistical measure, which shows how variables are related and a figure of 1.0 would mean perfect correlation. The price correlation among the five States is greater than 0.97.

Real prices are derived by deflating the actual (nominal) prices by a price index (Prices Received by Farmers All Farm Products Index 1990–92=100). Real prices have the effects of inflation removed. Real prices show whether there has been any change in a commodity's price behavior absent the effects of inflation. Real cranberry prices reached a peak in 1997. Currently, real prices have fallen to levels similar to the mid 1970's.

The value of production increased dramatically from 1960, reaching a peak of $350 million in 1997. In 2000, the value of production fell below $100 million for the first time since 1980. Between 1997 and 2001, growers lost 69 percent of the value of production due to the surplus situation. The value of production has declined in all of the major producing States.

With most agricultural commodities, there is a pronounced inverse relationship between production and prices. When production is high, prices are generally low and when production is low, prices are generally high. From 1960 through 1996, prices and production are positively correlated (the correlation coefficient is 0.93). However, beginning in 1997, as production continued to increase, prices started to decline and continued to decline as production increased in crop years 1998 and 1999. Starting in 1996, supply began to outpace demand, ultimately resulting in declining prices.

To help stabilize market supply and demand conditions, volume regulation was introduced in 2000 and again in 2001, marking the first time in 30 years that such regulations were implemented. Crop sizes in 2000 and 2001 have been reduced by the use of the producer allotment program, which limits the amount of product that a producer can deliver to a handler. Reduced crop sizes for these two crop years, combined with increased sales and USDA purchases, have resulted in a reduction of inventories.

In an industry such as cranberries, where the product can be stored for long periods of time, volume control is a method that can be used to reduce supplies so that they are more in line with market needs. Large inventories are costly to maintain and, with the outlook for continued high production levels, these inventories are difficult to market. Producers may not receive full payment for cranberries delivered to storage for several years, and storage costs are deducted from their final payment.

The demand for cranberries is inelastic. A producer allotment program results in a decrease in supply because producers can only deliver a certain portion of their past sales history. With an inelastic demand, a small shift (decrease) in the supply curve results in relatively large impacts on grower prices. An allotment program results in increasing grower prices and grower revenues.

The level of unsold inventory, the current capacity to produce in excess of expected demand, and continuing low grower prices have resulted in the industry debating various alternatives under their marketing order.

Reestablishment of Districts and Reapportionment of Grower Membership Among the Districts

The proposed amendment to authorize the Committee to reestablish and/or reapportion districts would give the Committee greater flexibility in responding to changes in grower demographics and district significance in the future. This authority would allow the Committee to recommend changes through informal rulemaking rather than through an order amendment. The proposal includes specific criteria to be considered prior to making any recommendations.

This proposed authority does not change the districts. It only authorizes the Committee to recommend changes more efficiently. No additional administrative costs are anticipated with this proposed amendment. This proposal should be favorable to both large and small entities.

Development of Marketing Policy

Section 929.46 of the order requires the Committee to develop a marketing policy each year as soon as practicable after August 1. In its marketing policy, the Committee projects expected supply and market conditions for the upcoming season. The marketing policy should be adopted before any recommendation for regulation, as it serves to inform USDA and the industry, in advance of the marketing of the crop, of the Committee's plans for regulation and the bases therefore. Handlers and growers can then plan their operations in accordance with the marketing policy.

The Committee is currently required to consider nine criteria in developing its marketing policy. The criteria include such items as expected production, expected demand conditions, and inventory levels. This rule recommends removing criteria not considered to be relevant in making a decision on the need for volume regulation.

The marketing order section of the order also states that the Committee must estimate the marketable quantity necessary to establish a producer allotment program by May 1, and must submit its marketing policy to USDA after August 1. These dates are inconsistent with the dates by which the Committee must recommend a volume regulation (if one or both are deemed necessary) for the upcoming crop. USDA is recommending that both dates be removed.

These changes are non-substantive in nature. They remove unnecessary criteria and obsolete dates from the order. As such, they will have no economic impact on growers or handlers.

Sales History Calculations Under the Producer Allotment Program

The proposed amendment to modify the method for calculating sales histories would provide growers with additional sales histories to compensate them for expected increases in yields on newer acres during a year of volume regulation, which would result in sales histories more reflective of actual sales. This proposed amendment would also allow more flexibility in recommending changes to the sales history formula and add the authority to calculate fresh and processed cranberries separately.

The proposed amendment to the sales history calculations would benefit growers, especially growers who

planted some or all of their acreage within the previous 5 years. The proposal would also help ensure that growers with mature acres who also have newer acreage and growers with only newer acres are treated equitably.

During the 2000 volume regulation, many growers, particularly those with new acreage 4 years old or less, indicated that the method of calculating sales history placed them at a disadvantage because they realized more production on their acreage than their sales history indicated. With the volume of new acres within the industry, this would affect many growers.

The Committee determined that something needed to be done to address the concerns associated in the 2000 crop year with growers with newer acreage. The Committee discussed a number of approaches for estimating sales history on new acres. One suggestion was to allow growers with newer acreage to add a percentage of the State average yield to their sales history each year up to the fourth year. The example presented was that acreage being harvested for the second time during a year of volume regulation would receive a sales history that was 25 percent of the State average yield, a third year harvest would receive 50 percent of State average yield, and a fourth year harvest would receive 75 percent of State average yield. Although this method would address some of the problems experienced in 2000, it was determined that the method established by this action would be simpler and more practical for growers to obtain the most realistic sales history.

This action addresses grower concerns regarding determination of their sales histories. The method provides additional sales history for growers with newer acres to account for increased yields for each growing year up to the fifth year by factoring in appropriate adjustments to reflect rapidly increasing production during initial harvests. The adjustments are in the form of additional sales histories based on the year of planting.

An appeals process would be established in crop years when volume regulation is used for growers to request a redetermination of their sales histories. For the 2000–2001 volume regulation, over 250 appeals were received by the appeals subcommittee (the first level of review for appeals). In 2001–2002, a total of 49 appeals were filed. The decrease in appeals filed was a direct result of the formula for calculating sales histories that was implemented in 2001. This proposed amendment represents a generic version of the formula that was used in 2001.

This proposal, if adopted, would not impose any immediate regulations on large or small growers and handlers. It would only modify the formula for calculating sales histories in the event volume regulations are implemented in the future. Adopting this proposal would benefit small businesses by allowing them more flexibility in receiving a more equitable sales history if volume regulations are recommended and implemented in future years. If this proposal is adopted, growers and handlers would know specifically how sales histories are calculated so they can be informed and business decisions can be made ahead of the future season.

The proposal also includes that sales histories, starting with the crop year following adoption of this amendment, would be calculated separately for fresh and processed cranberries. Fresh and organic fruit were exempt from the 2000 and 2001 volume regulations because it was determined that they did not contribute to the surplus. In both years, fresh fruit sales were deducted from sales histories and each grower's sales history represented processed sales only. To have sales histories more reflective of sales, the Committee proposed calculating separate sales histories for fresh and processed cranberries. Also, in future years, fresh cranberry sales could contribute to the surplus. This proposed change would make sales history calculations more equitable.

These changes will have a positive effect on all growers and handlers because they will result in a more equitable allocation of the marketable quantity among growers. The proposal would be favorable to both large and small entities.

Catastrophic Events That Impact Growers' Sales Histories

The proposed amendment would provide more flexibility in the provision under the sales history calculations that compensates growers with additional sales histories for losses on acreage due to forces beyond the grower's control.

The current provisions require that if a grower has no commercial sales from acreage for 3 consecutive crop years due to forces beyond the grower's control, the Committee shall compute a level of commercial sales for the fourth year for that acreage using an estimated production. The record revealed that this provision was too stringent as evidenced by only one grower meeting these criteria in two years of volume regulation.

The proposal would authorize the Committee to recommend rules and regulations to allow for adjustments of a grower's sales history to compensate for catastrophic events that impact a grower's crop. The Committee would recommend procedures and guidelines to be followed in each year a volume regulation is implemented. The proposed amendment would have a positive impact on both large and small growers as the Committee would be in a position to compensate more growers who experienced losses due to catastrophic events than the current order provides.

Remove Specified Dates Relating to Issuing Annual Allotments

The order currently provides that when a producer allotment regulation is implemented, USDA establishes an allotment percentage equal to the marketable quantity divided by the total of all growers' sales histories. The allotment percentage is then applied to each grower's sales history to determine that individual's annual allotment. All growers must file an AL–1 form with the Committee on or before April 15 of each year in order to receive their annual allotments. The Committee is required to notify each handler on or before June 1 of the annual allotment that can be handled for each grower whose crop will be delivered to such handler.

Experience during the 2000 and 2001 crop years has proven that maintaining a specified date by which growers are to file a form to qualify for their allotment and for the Committee to notify handlers of their growers' annual allotments has been difficult. This proposed change would delete the specified dates and allow the Committee to determine, with the approval of USDA, more appropriate dates by which growers are to file forms and the Committee is to notify handlers of their growers' annual allotments. The Committee would like to establish dates that the industry can realistically meet each season when a volume regulation is implemented.

Because volume regulation was not recommended until the end of March during 2000 and 2001, growers had difficulty in submitting the required reports in a timely manner. Additionally, the rulemaking process to establish the allotment percentage was not completed by June 1. Therefore, the Committee was unable to notify handlers of their growers' allotment by the specified deadline. With this proposed amendment, dates could be established in line with the timing of the recommendation and establishment of volume regulation. Allowing the

Committee to set dates that can realistically be met by the industry would better serve the purposes of the marketing order. Thus, this modification should benefit the entire industry, both large and small entities.

The Committee also recommended clarifying the explanation of how an allotment percentage is calculated. Currently, section 929.49(b) states that such allotment percentage shall equal the marketable quantity divided by the total of all growers' sales histories. It does not specify that ''all growers'' sales histories' includes the sales histories calculated for new growers. This rule proposes a clarification to ensure that total sales histories (including those of new growers) are used in this calculation. To the extent this clarification makes the terms of the order easier to understand, it should benefit cranberry growers and handlers.

This rule also proposes revising the information to be submitted by growers to qualify for an annual allotment. Currently, all growers must qualify for allotment by filing with the Committee a form including the following information: (1) The location of their cranberry producing acreage from which their annual allotment will be produced; (2) the amount of acreage which will be harvested; (3) changes in location, if any, of annual allotment; and (4) such other information, including a copy of any lease agreement, as is necessary for the Committee to administer the order. Such information is gathered by the Committee on a form specified as the AL–1 form.

The proposed amendment would modify these criteria by not including information that is not pertinent. Currently, growers are assigned a grower number and the amount of acreage on which cranberries are being produced is maintained. The location of the cranberry producing acreage is not maintained. Therefore, there is no need to specify this information on the form. It is also unnecessary to include changes in location, if any, of growers' annual allotment including the lease agreement. Annual allotment is linked to a grower's cranberry producing acreage and, since the acreage cannot be moved from one location to another, information on changes in location is not relevant. Therefore, the information to be submitted by growers is being recommended for revision by removing the information that the Committee does not need to operate a producer allotment program. Other information that is currently requested (including identifying the handler(s) to whom the grower will assign his or her allotment) would remain unchanged.

The AL–1 form was modified (and approved by OMB) prior to the 2001 volume regulation. At that time, the Committee did not include this information on the form. Therefore, there is no reporting burden change as a result of this amendment. This change removes the unnecessary information from the order language.

Clarify How the Committee Allocates Unused Allotment to Handlers

The proposed amendment would change the method by which the Committee allocates unused allotment to handlers having excess cranberries to proportional distribution of each handler's total allotment.

Currently under the producer allotment volume regulation features of the order, section 929.49(h) provides that handlers who receive cranberries more than the sum of their growers' annual allotments have ''excess cranberries'' and shall notify the Committee. Handlers who have remaining unused allotment are ''deficient'' and shall notify the Committee. The Committee shall equitably distribute unused allotment to all handlers having excess cranberries.

The proponents testified that there has been a debate in the industry on the interpretation of what equitable distribution means and how it should be accomplished. To add specificity, the Committee proposed replacing the words ''equitably distribute'' with ''proportional to each handler's total allotment''.

The proponents testified that the distribution of unused allotment would only be given to those handlers who have excess fruit and are in need of allotment to cover that fruit. Allotment is only distributed proportionately to handlers when there are more requests for unused allotment than available unused allotment. In this situation, handlers would then receive the allotment in proportion to the volume of cranberries they handle.

This amendment would have a positive impact on large and small handlers since handlers may be able to acquire the additional allotment they need for their excess berries than they would have under the current provisions.

Growers' Assignment of Allotment if No Crop Is Produced

The proposed amendment to authorize growers who choose not to produce a crop in years of volume regulation to not assign their allotment to their handler would provide growers with flexibility to decide what happens with their unused allotment. Currently, the order requires the allotment to go to the handlers.

Prior to implementing this provision, the Committee would consider what would happen to the unused allotment and recommend, with USDA approval, implementing regulations. This amendment would benefit growers who choose not to grow a crop by providing them with input into the allocation of that allotment. This proposal should be favorable to both large and small growers.

Transfers of Allotment During Years of Volume Regulation

The proposed amendment would allow growers to transfer allotment during a year of volume regulation and allow the sales history to remain with the lessor when there is a total or partial lease of cranberry acreage to another grower. Currently, growers are not allowed to transfer allotment to other growers. The only option available to growers to accomplish a transfer of allotment is to complete a lease agreement between the two growers. This involves filing paperwork, including signed leases and only transferring the sales history, not the allotment. Many of the lease agreements were initiated during the two years of volume regulation and created a burden on Committee staff. It also made recalculations of growers sales histories difficult.

This proposal would simplify the process for growers by authorizing growers to transfer all or part of his or her allotment to another grower. Safeguards are in place to ensure that the transferred allotment remains with the same handler unless consent is provided by both handlers. In addition, the Committee may establish dates by which transfers may take place.

This proposal would be beneficial to both large and small growers as it provides flexibility in transferring allotment.

Implementing Both Forms of Volume Regulation in the Same Year

The proposal to require authorizing both forms of volume regulation in the same year was proposed in accordance with an amendment to the Act in November 2001. The amendment specified that USDA is authorized to implement a producer allotment program and a handler withholding program in the same crop year through informal rulemaking based on a recommendation and supporting economic analysis submitted by the Committee. If such recommendation is made by the Committee, it must be made no later than March 1 of each

year. The amendment would provide additional flexibility to the Committee when considering its marketing policy each year.

This proposal should be favorable to both large and small entities.

Dates for Recommending Volume Regulation

The proposal to require the Committee to recommend a producer allotment program by March 1 each year would allow growers to alter their cultural practices in an efficient manner in the event that a producer allotment is implemented. Growers have indicated that they need to know as soon as possible whether the Committee is going to recommend a regulation since a producer allotment program requires growers to only deliver a portion of their crop. The Committee's decision influences whether growers can cut back on purchases of chemicals, fertilizer or possibly take acreage out of production. This can result in growers' savings on their cost of production. The later the decision is made by the Committee to regulate, the chances are greater that growers will have already invested these costs on their acreage.

The proposal to require the Committee to recommend a handler withholding program by August 31 each year would provide the Committee staff with ample time to prepare reports based on handler inventory reports and crop estimates from the National Agricultural Statistics Service (NASS). Because the withholding program does not impact grower deliveries, this date is more appropriate for making an informed decision on whether to recommend this type of program.

Another proposal would authorize both forms of volume regulation to be implemented each year in accordance with an amendment to the Act authorizing such proposal. The amendment states that if both forms of volume regulation are recommended, it should be done by March 1. Therefore, this proposed amendment would require that if both forms of regulation are recommended in the same year that it be recommended by March 1. The same reasoning for recommending a producer allotment alone would apply to this proposed requirement. Growers need to know as soon as possible if production costs can be mitigated if a producer allotment is recommended. All growers, both large and small, should benefit from this change.

Exemptions From Order Provisions

The proposed amendment recommending that specific authority be added to exempt fresh, organic or other forms of cranberries from order provisions would clarify the current language and provide guidelines for the specific forms or types of cranberries that could be exempted.

Fresh and organic cranberries were exempted from the 2000 and 2001 volume regulations under the minimum quantity exemption authority of the order. This proposal would merely clarify that authority in the order to ensure that fresh and organic and other forms of cranberries could be exempted if warranted in the future. This proposal should be beneficial to large and small entities.

Expand Outlets for Excess Cranberries

The proposed amendment to the outlets for excess cranberries provisions would broaden the scope of noncommercial and noncompetitive outlets for excess cranberries. Adoption of this proposal would provide the Committee, with USDA's approval, the ability to recognize and authorize the use of additional or new noncommercial and/or noncompetitive outlets for excess cranberries through informal rulemaking.

Because competitive markets can change from season to season and new and different research ideas can be devised, the Committee would develop guidelines each year a volume regulation is recommended that would be used in determining appropriate outlets for excess cranberries. This would benefit growers and handlers by providing flexibility in determining outlets. This proposal would be particularly useful in determining which foreign markets can be used as outlets for excess cranberries. Foreign markets are one area where growth is occurring and demand is increasing. Exports of cranberries have increased from 184,000 barrels in 1988 to 824,000 barrels in 2000. Both large and small entities should benefit from this proposal.

General Withholding Provisions

Section 929.54 of the order sets forth the general parameters pertaining to withholding regulations. Under this form of regulation, free and restricted percentages are established, based on market needs and anticipated supplies. The free percentage is applied to handlers' acquisitions of cranberries in a given season. A handler may market free percentage cranberries in any chosen manner, while restricted berries must be withheld from handling.

The withholding provisions of the order were used briefly over three decades ago. Although the cranberry industry has not used the authority for withholding regulations in quite some time, the record evidence supports maintaining this tool for possible future use. However, substantive changes in industry practices have rendered current withholding provisions in need of revision. Thus, this decision recommends updating and streamlining those provisions.

The record shows that at the time the withholding provisions were designed, the cranberry industry was much smaller, producing and handling much lower volumes of fruit than it does now. In 1960, production was about 1.3 million barrels; by 1999, a record 6.3 million barrels were grown. A much higher percentage of the crop was marketed fresh—about 40 percent in the early 1960's versus less than 10 percent in recent years.

Changes in harvesting and handling procedures have been made so the industry is better able to process higher volumes of cranberries. Forty years ago, virtually all cranberries were harvested dry, and water harvesting was in an experimental stage of development. Water harvesting is currently widespread in certain growing regions; cranberries harvested under this method must be handled immediately as they are subject to rapid deterioration.

In the early 1960's, handlers acquired some cranberries that had been ''screened'' to remove extraneous material that was picked up with the berries as they were being harvested, and ''unscreened'' berries from which the extraneous material (including culls) had not been removed. The handler cleaned some of the unscreened berries immediately upon receipt, while others were placed in storage and screened just prior to processing.

The order currently provides that when a withholding regulation is implemented, the restricted percentage will be applied to the volume of ''screened'' berries acquired by handlers. Since the term ''screening'' is obsolete, all references to that term are being deleted.

The order also currently provides that withheld cranberries must meet such quality standards as recommended by the Committee and established by USDA. The Federal or Federal-State Inspection Service must inspect such cranberries and certify that they meet the prescribed quality standards. The intent of these provisions is, again, to ensure that the withholding regulations reduce the volume of cranberries in the marketplace by not allowing culls to be used to meet withholding obligations. The inspection and certification process is also meant to assist the Committee in monitoring the proper disposition of

restricted cranberries, thereby ensuring handler compliance with any established withholding requirements.

The need for inspection and certification of withheld cranberries is not as great today as in the past. Additionally, inspection and certification could be costly, particularly since most withheld berries would subsequently be dumped, generating no revenue for growers or handlers. The inspection process could also inordinately slow down handling operations, and there could be differential impacts of such requirements because some handling facilities operate in ways that lend themselves to more efficient methods of pulling representative samples (for inspection purposes) than others.

Removing the requirements for mandatory inspection and certification requirements would allow the industry to develop alternative safeguards to achieve its objectives at lower cost. While the inspection process may be deemed the best method by the Committee, this proposal provides flexibility by allowing the Committee to consider other, less costly alternatives.

Eliminating the mandatory inspection under the withholding program and deleting obsolete terminology would make the program more flexible for the industry and allow the Committee to operate more efficiently. As such, this amendment should benefit cranberry growers and handlers by providing an additional tool they could use in times of oversupply.

Buy-Back Provisions Under the Handler Withholding Program

Section 929.56 of the order, entitled ''Special provisions relating to withheld (restricted) cranberries,'' sets forth procedures under which handlers may have their restricted cranberries released to them. These provisions are commonly referred to in the industry as the buy-back provisions.

Under the current buy-back provisions, a handler can request the Committee to release all or a portion of his or her restricted cranberries for use as free cranberries. The handler request has to be accompanied by a deposit equal to the fair market value of those cranberries. The Committee then attempts to purchase as nearly an equal amount of free cranberries from other handlers. Cranberries so purchased by the Committee are transferred to the restricted percentage and disposed of by the Committee in outlets that are noncompetitive to outlets for free cranberries. The provision that each handler deposit a fair market price with the Committee for each barrel of cranberries released and that the Committee use such funds to purchase an equal amount or as nearly an equal amount as possible of free cranberries is designed to ensure that the percentage of berries withheld from handling remains at the quantity established by the withholding regulation for the crop year.

The Committee has the authority to establish a fair market price for the release of restricted cranberries under the buy-back program. The money deposited with the Committee by handlers requesting release of their restricted cranberries is the only money the Committee has available for acquiring free cranberries. Thus, the amount deposited must be equal to the then current market price or the Committee will have insufficient funds to purchase a like quantity of free cranberries.

The Committee is required to release the restricted cranberries within 72 hours of receipt of a proper request (including the deposit of a fair market value). This release was made automatic so that handlers would be able to plan their operations, and very little delay would be encountered.

If the Committee is unable to purchase free berries to replace restricted cranberries that are released under these provisions, the funds deposited with the Committee are required to be returned to all handlers in proportion to the volume withheld by each handler.

This rule proposes authorizing direct buy-back between handlers. With this option, a handler would not have to go through the Committee to have his or her restricted berries released. Instead, that handler could arrange for the purchase of another handler's free cranberries directly. All terms, including the price paid, would be between the two parties involved and would not be prescribed by the Committee. This change would add flexibility to the order and could offer a more efficient method of buying back cranberries. Also, no Committee administrative costs would be incurred. Handlers would have the option of using this method, or they could buy back their berries through the Committee, as is currently provided.

There are four criteria the Committee needs to consider in establishing a fair market price under the buy-back program for purchasing restricted cranberries. These include prices at which growers are selling their cranberries to handlers; prices at which handlers are selling fresh berries to dealers; prices at which cranberries are being sold to processors; and prices at which the Committee has purchased free berries to replace released restricted berries.

This action proposes adding two criteria to the list—the prices at which handlers are selling cranberry concentrate and growers' costs of production. Both of these items are relevant to consider in determining a fair market value. Consideration of these criteria by the Committee would benefit handlers.

Under the current buy-back provisions, handlers are required to deposit with the Committee the full market value of the berries they are asking to be released. This decision proposes a different payment schedule so that handlers would not have to make a large cash payment prior to the sale of their restricted cranberries. Twenty percent of the total amount would be due at the time of the request, with an additional 10 percent due each month thereafter. This change would facilitate handlers buying back their restricted berries by reducing the costs of such a venture. Thus, handlers should benefit.

If the Committee is unable to purchase free berries under the buy-back system, it is currently required to refund the money back to all handlers proportionate to the amount each handler withheld under regulation. USDA is proposing a modification that would provide that the money be returned to the handler who deposited it for distribution to the growers whose fruit was sold. This should benefit growers whose fruit was sold. Additionally, this change could provide an incentive for handlers to make available free cranberries for purchase to replace restricted cranberries that are released under the buy-back provisions. For these reasons, this change should benefit the cranberry industry.

Paid Advertising

The proposal to add authority for paid advertising under the research and development provisions of the order would provide the Committee the flexibility to use paid advertising to assist, improve, or promote the marketing, distribution, and consumption of cranberries in either its export or domestic programs. The authority for authorizing paid advertising under the cranberry marketing order was added to the Act in October, 1999.

If a paid advertising program is recommended by the Committee, it could entail an increase in assessments to administer the program, which would have an impact on handlers. According to testimony, it is the Committee's intent to use paid advertising as a means

to provide consumers with relevant information to the health-related benefits of cranberries. Paid advertising authority is viewed as an additional tool available to the Committee to meet its objectives of increasing the consumption of cranberries and cranberry products. It is anticipated that any additional costs incurred to all handlers, both large and small, would be outweighed by the benefits of increasing demand for cranberries. Any paid advertising program and increase of assessment must proceed through notice and comment rulemaking before it is implemented.

Definition of Handle

The proposal to modify the definition of handle under the order would clarify that the transporting of fresh cranberries to foreign markets other than Canada is also considered handling. This proposed change would merely clarify language.

The proposal would also modify the definition by including the cold storage or freezing of withheld cranberries as an exemption from handling for the purpose of temporary cold storage during periods when withholding provisions are in effect prior to their disposal. The provision already applies this exemption to excess cranberries under the producer allotment program and it was determined that handlers could benefit from this provision under a withholding program as well. This would benefit large and small handlers by allowing temporary storage of withheld cranberries, which could be critical during a withholding volume regulation.

Reporting Requirements

The proposal to modify the reporting requirements would relocate a paragraph on a grower reporting requirement to the section on Reports for ease of referencing and is only administrative in nature.

The proposal would also add more specific information under the grower reporting provisions to incorporate additional information necessary from growers if the sales history and transfer of allotment proposals are adopted. This will assist the Committee in assembling the most accurate and effective information as possible. Orders with producer allotment programs are unique in that specific information is needed from growers in order to implement a program. Both large and small growers benefit from reporting the information by being provided accurate and timely sales histories that reflect their production and allow equitable allotments to be determined on their acreage during years of volume regulation. The failure of growers to file these reports could be detrimental to them in the event volume regulations are implemented. Any additional reporting requirements resulting from adoption of this proposed amendment would be submitted to the Office of Management and Budget prior to implementation.

The proposal would also include that handlers report on the quantities of excess cranberries as well as withheld cranberries. This is a clarification and administrative in nature. The proposal would also simplify and clarify the provision on verification of reports. The proposal should be favorable to large and small growers.

Obsolete Provision

The proposal to delete an obsolete provision relating to preliminary regulation is administrative in nature and is being recommending for adoption. There would be no impact on growers or handlers.

Proposed Amendments Not Recommended for Adoption in This Decision

Four proposed amendments are not being recommended for adoption. Therefore, there would be no economic impact resulting from these proposals.

The Recommended Decision erroneously indicated that five proposed amendments were not being recommended for adoption. The correct number of proposed amendments not being recommended for adoption is four (as discussed in Material Issues numbered 15, 16, 17 and 19).

The proposed amendments not recommended would have: (1) Incorporated a handler marketing pool and/or buy-back provisions to the producer allotment program (Material Issue 15); (2) Authorized an exemption from order provisions for the first 1,000 barrels of cranberries produced by each grower (Material Issue 16); (3) Expanded the production area to include the States of Maine and Delaware and the entire State of New York (Material Issue 17); and (4) Modified the definition of cranberry by adding the species *Vaccinium oxycoccus* to the definition (Material Issue 19).

Conclusion

The proposed amendments would not have a disproportionate economic impact on a substantial number of small entities. Although the proposed amendments may impose some additional costs and requirements on handlers, it is anticipated that the amendments will enhance the administration and functioning of the cranberry marketing order program. Therefore, any additional costs would be offset by the benefits derived from improved, more effective functioning of the order benefiting handlers and producers alike.

Paperwork Reduction Act

In accordance with the Paperwork Reduction Act of 1980 (44 U.S.C. 35), any reporting and recordkeeping provisions that would be generated by implementing the proposed amendments would be submitted to the Office of Management and Budget (OMB).

Many of the changes have no reporting ramifications if they are established. As examples, adding the authority for redistricting and reapportionment of the Committee, changing the deadlines for filing volume regulations, or adding the authority for paid advertising would not create any additional reporting requirements.

Some of the proposed amendments would not generate any reporting burdens by amendment of the order alone. If these authorities were added to the order, reporting burdens would occur at the time regulations were established to activate the order authority. Examples of these amendments are those that impact the two forms of volume regulations. If a producer allotment volume regulation were implemented, regulations would be needed to set forth any forms of cranberries exempt from the volume regulation or what outlets (and appropriate safeguards) would be established for excess cranberries. Also, at the time of recommendation, the process for making adjustments for catastrophic events would need to be recommended by the Committee. In these instances, the reporting burdens, if any, would not exist until the volume regulation was in place. In addition, if a handler withholding volume regulation is established, additional reporting burdens may be necessary to cover the handler-to-handler buy-back program.

Reporting burdens that would be generated by these amendments are the grower reporting requirements. However, prior to the 2001 volume regulation, the Committee modified the AL–1 form to accommodate needed requirements for implementing the producer allotment volume regulation.

Specifically, the way growers' sales histories were calculated that is being recommended to be added to the order was used in the 2001 volume regulation. The AL–1 form was modified at that time (and approved by OMB) to include

the additional information required, such as year of planting and year of first harvest.

Likewise, growers are already reporting fresh and processed sales separately on form GSAR–1. This information was included on the form prior to the 2001 volume regulation to accommodate the regulations.

The amendment to remove dates regarding issuance of annual allotments does not require a modification of the form as no dates are specified on the form.

Therefore, there would be no modification to reporting and recordkeeping burdens generated from these proposed amendments at this time. Current information collection requirements for Part 929 are approved by OMB under OMB number 0581–0189.

As with all Federal marketing order programs, reports and forms are periodically reviewed to reduce information requirements and duplication by industry and public sector agencies.

USDA has not identified any relevant Federal rules that duplicate, overlap or conflict with this proposed rule. These amendments are designed to enhance the administration and functioning of the marketing order to the benefit of the industry.

Committee meetings regarding these proposals as well as the hearing dates were widely publicized throughout the cranberry industry, and all interested persons were invited to attend the meetings and the hearing and participate in Committee deliberations on all issues. All Committee meetings and the hearing were public forums and all entities, both large and small, were able to express views on these issues. Finally, interested persons are invited to submit information on the regulatory and informational impacts of this action on small businesses.

Civil Justice Reform

The amendments proposed herein have been reviewed under Executive Order 12988, Civil Justice Reform. They are not intended to have retroactive effect. If adopted, the proposed amendments would not preempt any State or local laws, regulations, or policies, unless they present an irreconcilable conflict with the amendments.

The Act provides that administrative proceedings must be exhausted before parties may file suit in court. Under section 608c(15)(A) of the Act, any handler subject to an order may file with the Secretary a petition stating that the order, any provision of the order, or any obligation imposed in connection with the order is not in accordance with law and request a modification of the order or to be exempted therefrom. A handler is afforded the opportunity for a hearing on the petition. After the hearing the Secretary would rule on the petition. The Act provides that the district court of the United States in any district in which the handler is an inhabitant, or has his or her principal place of business, has jurisdiction to review the Secretary's ruling on the petition, provided an action is filed not later than 20 days after date of the entry of the ruling.

Findings and Conclusions; Discussion of Exceptions

The material issues, findings and conclusions, rulings, and general findings and determinations included in the Recommended Decision set forth in the April 28 issue of the **Federal Register** (69 FR 23330) are hereby approved and adopted subject to the following additions and modifications.

Rulings on Exceptions

Material Issue Number 1—Reestablishment of Districts and Reapportionment of Committee Membership Among Districts

Based on the exception filed, the findings and conclusions under material issue 1 of the Recommended Decision are revised by adding the following eight paragraphs after the fifteenth paragraph of that section:

WSCGA filed a statement supporting the recommendation and reiterated their position that Wisconsin is underrepresented and New Jersey is overrepresented. Further, the WSCGA is of the view that the committee should directly reallocate membership based upon current production.

CCCGA filed an exception opposing reestablishing districts without a committee recommendation for a hearing on the issue. It reiterated its concerns that Wisconsin representatives would immediately attempt to remove representation from New Jersey and dilute representation in Massachusetts. CCCGA believes that if that happens, Wisconsin representatives would have too much control over the Committee, which would have a negative impact on smaller States. In addition, CCCGA does not believe the cooperative seats on the Committee should decide the fate of the independent seats.

The Committee is composed of 13 grower members and 1 public member. District 3, which includes the State of Wisconsin, is assigned two independent seats. All actions of the Committee require at least 10 concurring votes if the public member does not vote and 11 concurring votes if the public member votes. The Committee was specifically devised in this manner to ensure that Committee recommendations are supported by a majority of the industry, which includes both cooperative and non-cooperative members. If a motion is made to reapportion the districts, 10 concurring votes are needed.

The decision to increase the Committee to its current level was part of the same hearing. That portion of the proposed amendments was expedited and the Secretary's Decision and Referendum Order was published in the **Federal Register** on December 12, 2003. In that decision, USDA concluded that providing an additional seat for District 3 at the exclusion of membership from Districts 2 or 4 was not desirable. It was determined important to take into account the significance of the smaller growing regions, while recognizing that the potential scale of the impact increases with the volume of cranberries produced and regulated.

Having 2 members from the districts that represent Wisconsin and Massachusetts reasonably recognized the fact that those districts have a greater economic interest at stake when more significant actions, such as volume regulation, are considered by the Committee. Allowing the smaller volume districts to have 1 member recognizes their significance to the industry. Using volume alone as a means of determining Committee membership does not take into consideration smaller growing regions. USDA further concluded that opportunities must be provided for input by all segments of the industry.

As stated previously, notice and comment rulemaking would be necessary to implement any modifications in district representation. All growers and handlers would be provided the opportunity to comment and all comments would be considered before issuing a final rule.

Also addressed previously is that this authority provides the Committee the flexibility to address industry changes in a timely manner. This flexibility is deemed beneficial to the Committee and the industry.

Accordingly, the exception on this material issue filed by CCCGA is denied.

Material Issue Number 2—Development of Marketing Policy

Based on two comments filed in support of this proposed amendment, the findings and conclusions under material issue 2 of the Recommended

Decision are revised by adding the following one paragraph after the eleventh paragraph of that section.

CCCGA and Clement Pappas, in their exceptions filed to the Recommended Decision, supported USDA's recommendation to delete the decision making dates from this section and modify the criteria to be considered in recommending the marketing policy.

Material Issue Number 3—Revision of Sales History

Based on the exceptions filed, the findings and conclusions under material issue 3 of the Recommended Decision are revised by adding the following twelve paragraphs after the twenty-seventh paragraph of the subsection in material issue 3 entitled *Sales History Formula:*

Clement Pappas, in its exception to the Recommended Decision, supported USDA's recommendation to amend the sales history formula.

The Committee's exception suggested this section be modified to better reflect the Committee's intent.

The Committee stated that the intent of modifying the sales history calculations was to provide additional sales histories to newer acres ''in years of volume regulation.'' The way the language is currently proposed, the Committee would calculate sales histories annually, which would include accommodating newer acres with additional sales histories each year. Providing additional sales history to newer acres is referred to throughout the industry as ''ramp-up.'' The Committee stated that ramp-up should only occur during periods when a producer allotment regulation is established.

Paragraph (b) of § 929.48 states that ''a new sales history shall be calculated for each grower *after each crop year* (emphasis added) using the formulas established in paragraph (a) of this section, or such other formula(s) as determined by the Committee, with the approval of the Secretary.''

The Committee believes paragraph (b) should be modified to state ''a new sales history shall be calculated for each grower *during periods when a producer allotment regulation has been established prior to the beginning of the next crop year,* using the formulas established in paragraph (a) of this section, or such other formula(s) as determined by the Committee, with the approval of the Secretary.''

The intent of the ramp-up formula is to provide growers ''in years of volume regulation'' with additional sales histories to account for expected increases in yields on newer acres in order to provide growers of these acres with a sales history more reflective of their actual sales potential at the time of a volume regulation. To require the Committee to provide the adjustment each year regardless of whether a volume regulation is in effect would be unnecessary.

The impact of a sales history assigned to new acreage would only affect growers when a volume regulation is implemented. For example, if the next volume regulation were implemented in 2008, growers who planted new acres in 2003 would have a sales history reflective of actual production in 2008 and would not need an adjustment on those acres. However, if new acres were planted in 2007, the ramp-up provisions should be applied to the new acres to provide this grower an adjustment for those acres that are not at full production at the time of the volume regulation.

It is concluded that the language in § 929.48 should be modified to clarify that adjustments for new acres is only applied during years of volume regulation. It is intended that the Committee would still compute sales histories annually for growers so any modification to this provision should ensure that new sales histories are calculated for growers each year. The Committee's suggested modification would not require any sales histories to be calculated until a volume regulation is implemented. Based on the record, the Committee needs to maintain an annual sales history for each grower based on their average production. To only compute sales histories in years of volume regulation would deprive the industry of critical information necessary to the mission of the Committee. The Committee uses this information annually in development of its marketing policy. Growers and handlers need to know this information to plan their growing and marketing strategies. It is important that the Committee continue to calculate sales histories annually. The language is being modified to express that adjustments for newer acres would only be authorized in years prior to any producer allotment volume regulation.

Paragraphs (a)(3), (4) and (6) are being modified. Paragraph (a)(3) will state that for growers with 5 years of sales history from acreage planted or replanted 1 year prior to the first harvest on that acreage, the sales history is computed by averaging the highest 4 of the 5 years and *in a year prior to a year of a producer allotment volume regulation,* shall be adjusted as provided in paragraph (a)(6) of this section.

Paragraph (a)(4) will state that for a grower with 4 years or less of sales history, the sales history will be computed by dividing the total sales from that acreage by 4 and *in a year prior to a year of a producer allotment volume regulation,* shall be adjusted as provided in paragraph (a)(6) of this section.

Paragraph (a)(6) will specify that the adjustments will only be applied in a year prior to a producer allotment volume regulation. Paragraph (b) will not be modified.

The Committee's exception on this material issue is being accepted. These changes will more accurately reflect the intent of the industry and are supported by the record.

Material Issue Number 4—Catastrophic Events That Impact Growers—Sales Histories

Based on the exceptions filed, the findings and conclusions under material issue 4 of the Recommended Decision are revised by adding the following five paragraphs after the sixteenth paragraph of that section:

WSCGA and Clement Pappas, in their exceptions filed to the Recommended Decision, supported the flexibility provided by USDA's recommendation to amend this provision.

CCCGA also supported the flexibility that this provision provides but was concerned that using the word ''catastrophic'' would be too stringent of a test to meet in order to qualify for an adjustment. As an example, CCCGA discussed a situation that impacted a Massachusetts grower in 2003. The grower experienced pesticide resistance with a severe insect pest called the cranberry weevil. This situation caused this grower to experience a crop loss in excess of 50 percent. CCCGA believed that this situation should be one where a grower would be authorized an adjustment in their sales history but was concerned that this type of event may not be classified as catastrophic.

The record supported that the Committee deliberated on this provision at length and agreed that the word catastrophic was the terminology that was preferred. They believed that allowances should be made for serious events that impact growers' crops, and should not be allowed for less serious events, such as a long rainy spell. In addition, the computation of sales histories allows a ''bad'' year not to be included in the computation if the acreage has 5 or more years of sales history. Only 4 of the highest years are used to calculate the sales history.

The record supported allowing the Committee to recommend, through informal rulemaking, more specific determinations of what would constitute a catastrophic event. Using the informal rulemaking authority provides the Committee the flexibility to thoroughly discuss the issue at Committee meetings and make recommendations.

Accordingly, no changes are being made to this provision. The exception on this issue is denied.

Material Issue Number 7—Growers Who Do Not Produce a Crop During a Year of Regulation and Assignment of Their Allotment

Based on the exceptions filed, the findings and conclusions under material issue 7 of the Recommended Decision are revised by adding the following eleven paragraphs after the eighth paragraph of that section:

Two exceptions addressed this material issue. Clement Pappas requested that specificity be added to § 929.49(f) to clarify that this provision would not supercede contractual arrangements. Although the hearing record disclosed that the amendment is

not intended to obviate contractual arrangements, the commenter believes that the order language should specify such to ensure that there is no confusion on this issue. The amendment specifies that growers who do not grow a crop may choose not to assign their allotment to a handler. The commenter believes that if many growers of one handler opt to not assign their allotment, a handler's marketing and sales program could be ruined.

Clement Pappas suggested adding a paragraph (k) to § 929.49 stating ''With the exception of issuance of annual allotments, nothing in this section shall be construed as superseding contractual agreements between growers and handlers.'' As stated previously, contractual arrangements between growers and handlers fall outside the scope of the order.

Because contractual relationships between growers and handlers are outside the scope of the order, the language requested to be included by this commenter is not being added to this provision. Therefore, this exception is denied.

The Committee's exception suggested adding the following sentence at the end of paragraph (f) of § 929.49: ''If a grower does not specify how their annual allotment is to be apportioned among the handlers, the committee will apportion such annual allotment equally among those handlers they are delivering their crop to.'' The Committee states that this addition was suggested at the hearing and there was no opposition to its inclusion. In testimony, the Committee representative stated that in the last two volume regulations, some growers who delivered to more than one handler did not specify the breakdown of the allotment. The Committee exception stated that this situation resulted in delays in apportionment and caused disagreements among handlers. This clarification has merit.

Paragraph (f) of § 929.49 is being modified to include the authority for the Committee to apportion the allotment among handlers if the grower fails to advise the Committee. This portion of the Committee's exception is being accepted.

The Committee also took exception to language in § 929.49 and believed that the language in paragraph (g) is in conflict with paragraph (i) of the same section and paragraph (b) of § 929.50.

The Committee explained that paragraph (g) of 929.49 states that growers who do not produce cranberries equal to their computed annual allotment *shall* transfer their unused allotment to such grower's handlers. In § 929.50(b) stated that a grower *may* transfer all or part of his/her allotment to another grower. The Committee states these provisions are in conflict with each other. The Committee suggested changing the *shall* in § 929.49(g) to *may* to correct the issue and because of that, paragraph (i) covering growers who do not produce a crop is not needed.

While it is agreed that there is a conflict between paragraph (g) of § 929.49 and paragraph (b) of § 929.50, the Committee's suggested change would not address the concern. If the word *may* were substituted for *shall* in § 929.49(g), growers would not be required to account for 100 percent of their unused allotment. Record evidence supports that for effective administration of the program, growers should account for all of their unused allotment. If growers have the option to deliver unused allotment to their handler or transfer unused allotment to other growers, they could choose not to transfer all their unused allotment. In that situation, it would be unclear what would happen to the remainder of their allotment. Therefore, the language is being modified to specify that growers *shall* transfer their unused allotment to their handler *unless it is transferred to another grower in accordance with § 929.50(b)*. In this way, any unused allotment not transferred to other growers must be transferred to their handlers.

The Committee's exception also states that there is no need for paragraph (i) where growers who choose not to grow a crop may choose not to assign their allotment. This situation is not in conflict with the provisions on transfers. This was included in the proposed order to allow growers who choose not to grow a crop some flexibility in assigning their allotment.

However, this option should also be included under paragraph (g) as an option for transferring unused allotment to handlers. Therefore, paragraph (g) of § 929.49 is being further modified to state that growers must transfer their unused allotment to their handler unless it is transferred to another grower or if it is not assigned in accordance with paragraph (i) of § 929.49.

The Committee's exception is being accepted in part and denied in part. Specifically, § 929.49(f) and (g) are being modified to address the points of the exception. The exception to remove paragraph (i) of § 929.49 is denied.

Material Issue Number 10—Dates for Recommending Volume Regulations

Based on the exception filed, the findings and conclusions under material issue 10 of the Recommended Decision are revised by adding the following two paragraphs after the ninth paragraph of that section:

Clement Pappas filed an exception expressing concern with authorizing a later date than March 1 for recommending a producer allotment program. The order language states that an allotment percentage must be recommended by no later than March 1, unless unforeseen circumstances deem a later date.

The commenter states that after March 1, growers have already incurred significant costs to maintain their bogs and prepare for the upcoming growing season. Record testimony supported that the March 1 date be flexible enough to allow an exception in the event of unforeseen circumstances. Therefore, this exception is denied.

Material Issue Number 11—Exemptions From Regulations

Based on the exceptions filed, the findings and conclusions under material issue 11 of the Recommended Decision are revised by adding the following four paragraphs after the ninth paragraph of that section:

WSCGA supports this amendment. However, it suggests that the description of how cranberries for fresh use are harvested be corrected. The recommended decision stated that fresh cranberries are dry harvested. WSCGA stated that in some growing areas in the eastern U.S., cranberries for fresh use are dry harvested. However, in Wisconsin, cranberries for fresh use are wet harvested. This exception is being accepted to clarify the different ways cranberries for fresh use are harvested.

Clement Pappas filed an exception stating that the language for exempting varieties and types of cranberries from regulations is too broad. The exception states that exemptions should be limited to niche markets and not varieties. The commenter further stated that allowing specific varieties to be exempted from order regulations creates a loophole for abuse.

The language specifies that forms or types of cranberries can be exempted from the regulations. Testimony did indicate that types of cranberries could be extended to include varieties. The intent of this amendment is to clarify that cranberries such as organic and fresh cranberries can be exempted from order provisions if recommended by the Committee and approved by USDA. In addition, other unforeseen markets could develop and the Committee wanted the language broad enough to cover these unforeseen situations. It is possible that an experimental variety could be developed that the Committee

believed would benefit from being exempt.

This exception is being denied. The language should remain flexible enough to allow for unforeseen markets that may develop that an exemption from order requirements would benefit.

Material Issue Number 13—General Withholding Provisions

Based on the exception filed, the findings and conclusions under material issue 13 of the Recommended Decision are revised by adding the following two paragraphs after the seventeenth paragraph of that section:

Clement Pappas filed an exception expressing general disapproval for the withholding method of volume regulation. The commenter stated that except for its use in withholding very small quantities of cranberries, the withholding provisions are a poor method of volume regulation in comparison to the producer allotment method of volume regulation.

The record supports maintaining this method of volume regulation as an additional tool for the industry in considering ways to minimize oversupply of cranberries. Any withholding regulation would have to be recommended by the Committee and approved by USDA. Accordingly, this exception is denied.

Material Issue Number 14—Buy-Back Provisions Under the Handler Withholding Program

Based on the exception filed, the findings and conclusions under material issue 14 of the Recommended Decision are revised by adding the following six paragraphs after the twenty-third paragraph of that section:

The Committee filed an exception pertaining to the distribution of funds collected under the buy-back provisions of the withholding program.

The order currently provides for situations in which the funds deposited with the committee by handlers to purchase unrestricted cranberries are in excess of the funds used by the committee for this purpose. In such situations, the excess funds are to be proportionately refunded to the handlers on the basis of the volume of cranberries withheld by each handler.

The recommended decision (and the notice of hearing) contained two provisions related to expended funds under the buy-back program. Paragraph (e) of § 929.56 proposed amending this provision to provide that any excess funds received by the committee accrue to the committee's general fund. Paragraph (f) of that same section provides that any unexpended funds be refunded to the handler that deposited the funds. Proposed paragraph (f) also stated that the handler would then equitably distribute the refund among the growers delivering cranberries to that handler.

In its exception, the committee recommended that § 929.56(e) be changed to provide that any excess funds received by the committee *would accrue to the handler who deposited the funds for the release of withheld cranberries to be distributed proportionately to the handlers' growers affected by the volume regulation* (the committee's suggested revision in italics).

After further review of the record evidence, USDA finds that the committee's exception has merit. The order should be consistent in its provisions relative to excess funds received under the buy-back program. Further, it is reasonable that such funds be refunded to those persons from whom they were collected.

Thus, the committee's exception is being accepted. However, the text of paragraph (e) has been slightly modified from the committee's suggested text. Paragraph (e) of § 929.56 has been modified accordingly.

Material Issue Number 15—Handler Marketing Pool and Buy-Back Under the Producer Allotment Program

Based on the exceptions filed, the findings and conclusions under material issue 15 of the Recommended Decision are revised by adding the following four paragraphs after the thirty-seventh paragraph of that section:

Ocean Spray, in its exception filed to the Recommended Decision, supported USDA's recommendation to not include a handler marketing pool to the order.

Clement Pappas believes the handler marketing pool should be added to the order. In its exception, the commenter stated that the proposed amendment had broad industry support and was innovative. The commenter stated that the recommended decision states that without resolution on price and cohesiveness from all segments of the industry, the handler marketing pool would not work. According to the commenter, these standards are inappropriate for evaluating the handler marketing pool because they are impossible to meet. If this standard were applied to all amendments, none would pass. Finally, the commenter stated that adequate justification was not provided and this amendment should be allowed to be voted on in a referendum.

As stated previously in the Recommended Decision, this concept was innovative and showed the potential to address concerns of handlers. This issue was considered at the subcommittee level and agreement on the pricing issue could not be achieved. There were wide-ranging options put forth on how the pricing mechanism could work, each benefiting one segment of the industry over another. Because of the subcommittee's inability to gain consensus on this issue, a recommendation was not made to the full committee. In addition, nothing additional was presented on the hearing record to demonstrate how the handler marketing pool could work effectively, particularly in view of the outstanding pricing issue options.

Accordingly, this exception is denied.

Material Issue Number 17—Expansion of Production Area

Based on the exceptions filed, the findings and conclusions under material issue 17 of the Recommended Decision are revised by adding the following eleven paragraphs after the twenty-eighth paragraph of that section:

There were six exceptions filed regarding the decision not to expand the production area.

The comments included discussions that the entire industry benefits from the operation of the marketing order, especially the promotion activities. Thus, all growing areas should contribute to these efforts, as well as participate in any volume regulation.

Two commenters stated that there are other States currently included in the marketing order that produce minimal amounts of cranberries. One commenter stated that most Massachusetts producers have minimal acreage and low yields and for this reason, Massachusetts growers should be exempt.

Two commenters stated that all growers compete for the same markets. As an example, a commenter stated that Maine's involvement in the ingredients market impacts all of the Northeast States that compete in that market.

One commenter believed that USDA's analysis of future yields of Maine cranberries is flawed, and there is the potential for Maine to produce large volumes of cranberries in the future.

Three commenters did not believe that there is any differentiation in the quality of Maine cranberries compared to those grown in other States.

Two commenters discussed the importance of receiving data from all producing States. The best way to ensure complete information is to collect it under marketing order reporting requirements.

One commenter stated that USDA misinterpreted the Act's requirement

that a marketing order be limited in its application to the smallest regional production area practicable.

One commenter stated that it is a rare occasion when consensus is reached in the cranberry industry and that there is consensus that the production area should be expanded. The commenter believes that USDA should not deny such a strongly supported position by the industry. Another commenter added that growers should be allowed to vote on this issue in referendum.

The concerns raised in the exceptions have been thoroughly considered. Many segments of the industry throughout this proceeding, both within and outside the production area, have expressed opinions on the expansion of the production area.

After consideration of the record, including the exceptions filed on this material issue, USDA concludes that the production area should not be expanded at this time as proposed by the Committee. The record includes many factors concerning the determination of the appropriate production area. These include production levels, the number of growers in each State, the markets and the future potential of the industry. It is determined that expanding the production area at this time is not necessary for the effective operation of the marketing order and thus would not be consistent with the Act.

Accordingly, the six exceptions filed on this material issue are denied.

In arriving at the findings and conclusions and the regulatory provisions of this decision, the exceptions to the Recommended Decision were carefully considered in conjunction with the record evidence. To the extent that the findings and conclusions and the regulatory provisions of this decision are at variance with the exceptions, such exceptions are denied.

Order Amending the Marketing Agreement and Order

Annexed hereto and made a part hereof is the document entitled ''Order Amending the Order Regulating the Handling of Cranberries Grown in the States of Massachusetts, Rhode Island, Connecticut, New Jersey, Wisconsin, Michigan, Minnesota, Oregon, Washington, and Long Island in the State of New York.'' This document has been decided upon as the detailed and appropriate means of effectuating the foregoing findings and conclusions.

It is hereby ordered, That this entire decision be published in the **Federal Register**.

Referendum Order

It is hereby directed that a referendum be conducted in accordance with the procedure for the conduct of referenda (7 CFR part 900.400 *et seq.*) to determine whether the issuance of the annexed order amending the order regulating the handling of cranberries grown in the States of Massachusetts, Rhode Island, Connecticut, New Jersey, Wisconsin, Michigan, Minnesota, Oregon, Washington, and Long Island in the State of New York is approved or favored by growers and processors, as defined under the terms of the order, who during the representative period were engaged in the production or processing of cranberries in the production area.

The representative period for the conduct of such referendum is hereby determined to be September 1, 2003, through August 31, 2004.

The agent of the Secretary to conduct such referendum is hereby designated to be Kenneth G. Johnson, Regional Manager, DC Marketing Field Office, Marketing Order Administration Branch, Fruit and Vegetable Programs, AMS, USDA, 4700 River Road, Unit 155, Suite 2A04, Riverdale, Maryland 20737; telephone (301) 734–5243.

List of Subjects in 7 CFR Part 929

Cranberries, Marketing agreements, Reporting and recordkeeping requirements.

Dated: November 24, 2004.

A.J. Yates,

Administrator, Agricultural Marketing Service.

Order Amending the Order Regulating the Handling of Cranberries Grown in the States of Massachusetts, Rhode Island, Connecticut, New Jersey, Wisconsin, Michigan, Minnesota, Oregon, Washington, and Long Island in the State of New York [1]

Findings and Determinations

The findings and determinations hereinafter set forth are supplementary and in addition to the findings and determinations previously made in connection with the issuance of the order; and all of said previous findings and determinations are hereby ratified and affirmed, except insofar as such findings and determinations may be in conflict with the findings and determinations set forth herein.

(a) *Findings and Determinations Upon the Basis of the Hearing Record.*

Pursuant to the provisions of the Agricultural Marketing Agreement Act of 1937, as amended (7 U.S.C. 601 *et seq.*), and the applicable rules of practice and procedure effective thereunder (7 CFR part 900), a public hearing was held upon the proposed amendments to the Marketing Agreement and Order No. 929 (7 CFR part 929), regulating the handling of cranberries grown in the States of Massachusetts, Rhode Island, Connecticut, New Jersey, Wisconsin, Michigan, Minnesota, Oregon, Washington, and Long Island in the State of New York.

Upon the basis of the evidence introduced at such hearing and the record thereof, it is found that:

(1) The marketing agreement and order, as amended, and as hereby proposed to be further amended, and all of the terms and conditions thereof, will tend to effectuate the declared policy of the Act;

(2) The marketing agreement and order, as amended, and as hereby proposed to be further amended, regulate the handling of cranberries grown in the production area in the same manner as, and is applicable only to persons in the respective classes of commercial and industrial activity specified in the marketing order upon which hearings have been held;

(3) The marketing agreement and order, as amended, and as hereby proposed to be further amended, are limited in application to the smallest regional production area which is practicable, consistent with carrying out the declared policy of the Act, and the issuance of several orders applicable to subdivisions of the production area would not effectively carry out the declared policy of the Act;

(4) The marketing agreement and order, as amended and as hereby proposed to be further amended, prescribe, insofar as practicable, such different terms applicable to different parts of the production area as are necessary to give due recognition to the differences in the production and marketing of cranberries grown in the production area; and

(5) All handling of cranberries grown in the production area as defined in the marketing agreement and order, as amended, and as hereby proposed to be further amended, is in the current of interstate or foreign commerce or directly burdens, obstructs, or affects such commerce.

Order Relative to Handling

It is therefore ordered, That on and after the effective date hereof, all handling of cranberries grown in the

[1] This order shall not become effective unless and until the requirements of § 900.14 of the rules of practice and procedure governing proceedings to formulate marketing agreements and marketing orders have been met.

States of Massachusetts, Rhode Island, Connecticut, New Jersey, Wisconsin, Michigan, Minnesota, Oregon, Washington, and Long Island in the State of New York, shall be in conformity to, and in compliance with, the terms and conditions of the said order as hereby proposed to be amended as follows:

The provisions of the proposed marketing agreement and the order amending the order will be and are the terms and provisions of this order amending the order and are set forth in full herein.

PART 929—CRANBERRIES GROWN IN THE STATES OF MASSACHUSETTS, RHODE ISLAND, CONNECTICUT, NEW JERSEY, WISCONSIN, MICHIGAN, MINNESOTA, OREGON, WASHINGTON, AND LONG ISLAND IN THE STATE OF NEW YORK

1. The authority citation for 7 CFR part 929 continues to read as follows:

Authority: 7 U.S.C. 601–674.

2. Amend § 929.10 by revising paragraphs (a)(2) and (b)(4) to read as follows:

§ 929.10 Handle.

(a) * * *

(2) To sell, consign, deliver, or transport (except as a common or contract carrier of cranberries owned by another person) fresh cranberries or in any other way to place fresh cranberries in the current of commerce within the production area or between the production area and any point outside thereof.

(b) * * *

(4) The cold storage or freezing of excess or restricted cranberries for the purpose of temporary storage during periods when an annual allotment percentage and/or a handler withholding program is in effect prior to their disposal, pursuant to §§ 929.54 or 929.59.

3. Add a new § 929.28 to read as follows:

§ 929.28 Redistricting and reapportionment.

(a) The committee, with the approval of the Secretary, may reestablish districts within the production area and reapportion membership among the districts. In recommending such changes, the committee shall give consideration to:

(1) The relative volume of cranberries produced within each district.

(2) The relative number of cranberry producers within each district.

(3) Cranberry acreage within each district.

(4) Other relevant factors.

(b) The committee may establish, with the approval of the Secretary, rules and regulations for the implementation and operation of this section.

4. Revise § 929.45 to read as follows:

§ 929.45 Research and development.

(a) The committee, with the approval of the Secretary, may establish or provide for the establishment of production research, marketing research, and market development projects, including paid advertising, designed to assist, improve, or promote the marketing, distribution, consumption, or efficient production of cranberries. The expense of such projects shall be paid from funds collected pursuant to § 929.41, or from such other funds as approved by the Secretary.

(b) The committee may, with the approval of the Secretary, establish rules and regulations as necessary for the implementation and operation of this section.

5. Revise § 929.46 to read as follows:

§ 929.46 Marketing policy.

Each season prior to making any recommendation pursuant to § 929.51, the committee shall submit to the Secretary a report setting forth its marketing policy for the crop year. Such marketing policy shall contain the following information for the current crop year:

(a) The estimated total production of cranberries;

(b) The expected general quality of such cranberry production;

(c) The estimated carryover, as of September 1, of frozen cranberries and other cranberry products;

(d) The expected demand conditions for cranberries in different market outlets;

(e) The recommended desirable total marketable quantity of cranberries including a recommended adequate carryover into the following crop year of frozen cranberries and other cranberry products;

(f) Other factors having a bearing on the marketing of cranberries.

§ 929.47 [Removed]

6. Remove § 929.47.

7. Revise § 929.48 to read as follows:

§ 929.48 Sales history.

(a) A sales history for each grower shall be computed by the committee in the following manner:

(1) For growers with acreage with 6 or more years of sales history, the sales history shall be computed using an average of the highest four of the most recent six years of sales.

(2) For growers with 5 years of sales history from acreage planted or replanted 2 years prior to the first harvest on that acreage, the sales history is computed by averaging the highest 4 of the 5 years.

(3) For growers with 5 years of sales history from acreage planted or replanted 1 year prior to the first harvest on that acreage, the sales history is computed by averaging the highest 4 of the 5 years and in a year prior to a year of a producer allotment volume regulation shall be adjusted as provided in paragraph (6) of this section.

(4) For a grower with 4 years or less of sales history, the sales history shall be computed by dividing the total sales from that acreage by 4 and in a year prior to a year of a producer allotment volume regulation shall be adjusted as provided in paragraph (a)(6) of this section.

(5) For growers with acreage having no sales history, or for the first harvest of replanted acres, the sales history will be the average first year yields (depending on whether first harvested 1 or 2 years after planting or replanting) as established by the committee and multiplied by the number of acres.

(6) In a year prior to a year of a producer allotment volume regulation, in addition to the sales history computed in accordance with paragraphs (a)(3) and (4) of this section, additional sales history shall be assigned to growers using the formula $x=(a-b)c$. The letter ''x'' constitutes the additional number of barrels to be added to the grower's sales history. The value ''a'' is the expected yield for the forthcoming year harvested acreage as established by the committee. The value ''b'' is the total sales from that acreage as established by the committee divided by four. The value ''c'' is the number of acres planted or replanted in the specified year. For acreage with five years of sales history: a = the expected yield for the forthcoming sixth year harvested acreage (as established by the committee); b = an average of the most recent 4 years of expected yields (as established by the committee); and c = the number of acres with 5 years of sales history.

(b) A new sales history shall be calculated for each grower after each crop year, using the formulas established in paragraph (a) of this section, or such other formula(s) as determined by the committee, with the approval of the Secretary.

(c) The committee, with the approval of the Secretary, may adopt regulations to change the number and identity of years to be used in computing sales histories, including the number of years

to be used in computing the average. The committee may establish, with the approval of the Secretary, rules and regulations necessary for the implementation and operation of this section.

(d) Sales histories, starting with the crop year following adoption of this part, shall be calculated separately for fresh and processed cranberries. The amount of fresh fruit sales history may be calculated based on either the delivered weight of the barrels paid for by the handler (excluding trash and unusable fruit) or on the weight of the fruit paid for by the handler after cleaning and sorting for the retail market. Handlers using the former calculation shall allocate delivered fresh fruit subsequently used for processing to growers' processing sales. Fresh fruit sales history, in whole or in part, may be added to process fruit sales history with the approval of the committee in the event that the grower's fruit does not qualify as fresh fruit at delivery.

(e) The committee may recommend rules and regulations, with the approval of the Secretary, to adjust a grower's sales history to compensate for catastrophic events that impact the grower's crop.

8. Revise § 929.49 to read as follows:

§ 929.49 Marketable quantity, allotment percentage, and annual allotment.

(a) Marketable quantity and allotment percentage. If the Secretary finds, from the recommendation of the committee or from other available information, that limiting the quantity of cranberries purchased from or handled on behalf of growers during a crop year would tend to effectuate the declared policy of the Act, the Secretary shall determine and establish a marketable quantity for that crop year.

(b) The marketable quantity shall be apportioned among growers by applying the allotment percentage to each grower's sales history, established pursuant to § 929.48. Such allotment percentage shall be established by the Secretary and shall equal the marketable quantity divided by the total of all growers' sales histories including the estimated total sales history for new growers. Except as provided in paragraph (g) of this section, no handler shall purchase or handle on behalf of any grower cranberries not within such grower's annual allotment.

(c) In any crop year in which the production of cranberries is estimated by the committee to be equal to or less than its recommended marketable quantity, the committee may recommend that the Secretary increase or suspend the allotment percentage applicable to that year. In the event it is found that market demand is greater than the marketable quantity previously set, the committee may recommend that the Secretary increase such quantity.

(d) Issuance of annual allotments. The committee shall require all growers to qualify for such allotment by filing with the committee a form wherein growers include the following information:

(1) The amount of acreage which will be harvested;

(2) A copy of any lease agreement covering cranberry acreage;

(3) The name of the handler(s) to whom their annual allotment will be delivered;

(4) Such other information as may be necessary for the implementation and operation of this section.

(e) On or before such date as determined by the committee, with the approval of the Secretary, the committee shall issue to each grower an annual allotment determined by applying the allotment percentage established pursuant to paragraph (b) of this section to the grower's sales history.

(f) On or before such date as determined by the committee, with the approval of the Secretary, in which an allotment percentage is established by the Secretary, the committee shall notify each handler of the annual allotment that can be handled for each grower whose total crop will be delivered to that handler. In cases where a grower delivers a crop to more than one handler, the grower must specify how the annual allotment will be apportioned among the handlers. If a grower does not specify how their annual allotment is to be apportioned among the handlers, the Committee will apportion such annual allotment equally among those handlers they are delivering their crop to.

(g) Growers who do not produce cranberries equal to their computed annual allotment shall transfer their unused allotment to such growers' handlers unless it is transferred to another grower in accordance with § 929.50(b) or if it is not assigned in accordance with paragraph (i) of this section. The handler shall equitably allocate the unused annual allotment to growers with excess cranberries who deliver to such handler. Unused annual allotment remaining after all such transfers have occurred shall be reported and transferred to the committee by such date as established by the committee with the approval of the Secretary.

(h) Handlers who receive cranberries more than the sum of their growers' annual allotments have ''excess cranberries,'' pursuant to § 929.59, and shall so notify the committee. Handlers who have remaining unused allotment pursuant to paragraph (g) of this section are ''deficient'' and shall so notify the committee. The committee shall allocate unused allotment to all handlers having excess cranberries, proportional to each handler's total allotment.

(i) Growers who decide not to grow a crop, during any crop year in which a volume regulation is in effect, may choose not to assign their allotment to a handler.

(j) The committee may establish, with the approval of the Secretary, rules and regulations necessary for the implementation and operation of this section.

9. Revise § 929.50 to read as follows:

§ 929.50 Transfers of sales histories and annual allotments.

(a) Leases and sales of cranberry acreage.

(1) *Total or partial lease of cranberry acreage.* When total or partial lease of cranberry acreage occurs, sales history attributable to the acreage being leased shall remain with the lessor.

(2) *Total sale of cranberry acreage.* When there is a sale of a grower's total cranberry producing acreage, the committee shall transfer all owned acreage and all associated sales history to such acreage to the buyer. The seller and buyer shall file a sales transfer form providing the committee with such information as may be requested so that the buyer will have immediate access to the sales history computation process.

(3) *Partial sale of cranberry acreage.* When less than the total cranberry producing acreage is sold, sales history associated with that portion of the acreage being sold shall be transferred with the acreage. The seller shall provide the committee with a sales transfer form containing, but not limited to the distribution of acreage and the percentage of sales history, as defined in § 929.48(a)(1), attributable to the acreage being sold.

(4) No sale of cranberry acreage shall be recognized unless the committee is notified in writing.

(b) *Allotment transfers.* During a year of volume regulation, a grower may transfer all or part of his/her allotment to another grower. If a lease is in effect the lessee shall receive allotment from lessor attributable to the acreage leased. *Provided,* That the transferred allotment shall remain assigned to the same handler and that the transfer shall take place prior to a date to be recommended by the Committee and approved by the Secretary. Transfers of allotment between growers having different

handlers may occur with the consent of both handlers.

(c) The committee may establish, with the approval of the Secretary, rules and regulations, as needed, for the implementation and operation of this section.

10. Revise § 929.51 to read as follows:

929.51 Recommendations for regulation.

(a) Except as otherwise provided in paragraph (b) of this section, if the committee deems it advisable to regulate the handling of cranberries in the manner provided in § 929.52, it shall so recommend to the Secretary by the following appropriate dates:

(1) An allotment percentage regulation must be recommended by no later than March 1;

(2) A handler withholding program must be recommended by not later than August 31. Such recommendation shall include the free and restricted percentages for the crop year;

(3) If both programs are recommended in the same year, the Committee shall submit with its recommendation an economic analysis to the USDA prior to March 1 of the year in which the programs are recommended.

(b) An exception to the requirement in paragraph (a)(1) of this section may be made in a crop year in which, due to unforeseen circumstances, a producer allotment regulation is deemed necessary subsequent to the March 1 deadline.

(c) In arriving at its recommendations for regulation pursuant to paragraph (a) of this section, the committee shall give consideration to current information with respect to the factors affecting the supply of and demand for cranberries during the period when it is proposed that such regulation should be imposed. With each such recommendation for regulation, the committee shall submit to the Secretary the data and information on which such recommendation is based and any other information the Secretary may request.

11. Revise § 929.52 to read as follows:

§ 929.52 Issuance of regulations.

(a) The Secretary shall regulate, in the manner specified in this section, the handling of cranberries whenever the Secretary finds, from the recommendations and information submitted by the committee, or from other available information, that such regulation will tend to effectuate the declared policy of the Act. Such regulation shall limit the total quantity of cranberries which may be handled during any fiscal period by fixing the free and restricted percentages, applied to cranberries acquired by handlers in accordance with § 929.54, and/or by establishing an allotment percentage in accordance with § 929.49.

(b) The committee shall be informed immediately of any such regulation issued by the Secretary, and the committee shall promptly give notice thereof to handlers.

12. Revise § 929.54 to read as follows:

§ 929.54 Withholding.

(a) Whenever the Secretary has fixed the free and restricted percentages for any fiscal period, as provided for in § 929.52(a), each handler shall withhold from handling a portion of the cranberries acquired during such period. The withheld portion shall be equal to the restricted percentage multiplied by the volume of marketable cranberries acquired. Such withholding requirements shall not apply to any lot of cranberries for which such withholding requirement previously has been met by another handler in accordance with § 929.55.

(b) The committee, with the approval of the Secretary, shall prescribe the manner in which, and date or dates during the fiscal period by which, handlers shall have complied with the withholding requirements specified in paragraph (a) of this section.

(c) Withheld cranberries may meet such standards of grade, size, quality, or condition as the committee, with the approval of the Secretary, may prescribe. The Federal or Federal-State Inspection Service may inspect all such cranberries. A certificate of such inspection shall be issued which shall include the name and address of the handler, the number and type of containers in the lot, the location where the lot is stored, identification marks (including lot stamp, if used), and the quantity of cranberries in such lot that meet the prescribed standards. Promptly after inspection and certification, each such handler shall submit to the committee a copy of the certificate of inspection issued with respect to such cranberries.

(d) Any handler who withholds from handling a quantity of cranberries in excess of that required pursuant to paragraph (a) of this section shall have such excess quantity credited toward the next fiscal year's withholding obligation, if any—provided that such credit shall be applicable only if the restricted percentage established pursuant to § 929.52 was modified pursuant to § 929.53; to the extent such excess was disposed of prior to such modification; and after such handler furnishes the committee with such information as it prescribes regarding such withholding and disposition.

(e) The Committee, with the approval of the Secretary, may establish rules and regulations necessary and incidental to the administration of this section.

13. Revise § 929.56 to read as follows:

§ 929.56 Special provisions relating to withheld (restricted) cranberries.

(a) A handler shall make a written request to the committee for the release of all or part of the cranberries that the handler is withholding from handling pursuant to § 929.54(a). Each request shall state the quantity of cranberries for which release is requested and shall provide such additional information as the committee may require. Handlers may replace the quantity of withheld cranberries requested for release as provided under either paragraph (b) or (c) of this section.

(b) The handler may contract with another handler for an amount of free cranberries to be converted to restricted cranberries that is equal to the volume of cranberries that the handler wishes to have converted from his own restricted cranberries to free cranberries.

(1) The handlers involved in such an agreement shall provide the committee with such information as may be requested prior to the release of any restricted cranberries.

(2) The committee shall establish guidelines to ensure that all necessary documentation is provided to the committee, including but not limited to, the amount of cranberries being converted and the identities of the handlers assuming the responsibility for withholding and disposing of the free cranberries being converted to restricted cranberries.

(3) Cranberries converted to replace released cranberries may be required to be inspected and meet such standards as may be prescribed for withheld cranberries prior to disposal.

(4) Transactions and agreements negotiated between handlers shall include all costs associated with such transactions including the purchase of the free cranberries to be converted to restricted cranberries and all costs associated with inspection (if applicable) and disposal of such restricted cranberries. No costs shall be incurred by the committee other than for the normal activities associated with the implementation and operation of a volume regulation program.

(5) Free cranberries belonging to one handler and converted to restricted cranberries on the behalf of another handler shall be reported to the committee in such manner as prescribed by the committee.

(c) Except as otherwise directed by the Secretary, as near as practicable to

the beginning of the marketing season of each fiscal period with respect to which the marketing policy proposes regulation pursuant to § 929.52(a), the committee shall determine the amount per barrel each handler shall deposit with the committee for it to release to him, in accordance with this section, all or part of the cranberries he is withholding; and the committee shall give notice of such amount of deposit to handlers. Such notice shall state the period during which such amount of deposit shall be in effect. Whenever the committee determines that, by reason of changed conditions or other factors, a different amount should therefore be deposited for the release of withheld cranberries, it shall give notice to handlers of the new amount and the effective period thereof. Each determination as to the amount of deposit shall be on the basis of the committee's evaluation of the following factors:

(1) The prices at which growers are selling cranberries to handlers,

(2) The prices at which handlers are selling fresh market cranberries to dealers,

(3) The prices at which cranberries are being sold for processing in products,

(4) The prices at which handlers are selling cranberry concentrate,

(5) The prices the committee has paid to purchase cranberries to replace released cranberries in accordance with this section, and

(6) The costs incurred by growers in producing cranberries.

(7) Each request for release of withheld cranberries shall include, in addition to all other information as may be prescribed by the committee, the quantity of cranberries the release is requesting and shall be accompanied by a deposit (a cashier's or certified check made payable to the Cranberry Marketing Committee) in an amount equal to the twenty percent of the amount determined by multiplying the number of barrels stated in the request by the then effective amount per barrel as determined in paragraph (c).

(8) Subsequent deposits equal to, but not less than, the ten percent of the remaining outstanding balance shall be payable to the committee on a monthly basis commencing on January 1, and concluding by no later than August 31 of the fiscal period.

(9) If the committee determines such a release request is properly filled out, is accompanied by the required deposit, and contains a certification that the handler is withholding such cranberries, it shall release to such handler the quantity of cranberries specified in his request.

(d) Funds deposited for the release of withheld cranberries, pursuant to paragraph (c) of this section, shall be used by the committee to purchase from handlers unrestricted (free percentage) cranberries in an aggregate amount as nearly equal to, but not in excess of, the total quantity of the released cranberries as it is possible to purchase to replace the released cranberries.

(e) All handlers shall be given an equal opportunity to participate in such purchase of unrestricted (free percentage) cranberries. If a larger quantity is offered than can be purchased, the purchases shall be made at the lowest price possible. If two or more handlers offer unrestricted (free percentage) cranberries at the same price, purchases from such handlers shall be in proportion to the quantity of their respective offerings insofar as such division is practicable. The committee shall dispose of cranberries purchased as restricted cranberries in accordance with § 929.57. Any funds received by the committee for cranberries so disposed of, which are in excess of the costs incurred by the committee in making such disposition, would accrue to the handler who deposited those funds to be distributed to that handler's growers.

(f) In the event any portion of the funds deposited with the committee pursuant to paragraph (c) of this section cannot, for reasons beyond the committee's control, be expended to purchase unrestricted (free percentage) cranberries to replace those withheld cranberries requested to be released, such unexpended funds shall, after deducting expenses incurred by the committee, be refunded to the handler who deposited the funds. The handler shall equitably distribute such refund among the growers delivering to such handler.

(g) Inspection for restricted (withheld) cranberries released to a handler is not required.

(h) The committee may establish, with the approval of the Secretary, rules and regulations for the implementation of this section. Such rules and regulations may include, but are not limited to, revisions in the payment schedule specified in paragraphs (c)(7) and (c)(8) of this section.

14. Revise § 929.58 to read as follows:

§ 929.58 Exemptions.

(a) Upon the basis of the recommendation and information submitted by the committee, or from other available information, the Secretary may relieve from any or all requirements pursuant to this part the handling of cranberries in such minimum quantities as the committee, with the approval of the Secretary, may prescribe.

(b) Upon the basis of the recommendation and information submitted by the committee, or from other available information, the Secretary may relieve from any or all requirements pursuant to this part the handling of such forms or types of cranberries as the committee, with the approval of the Secretary, may prescribe. Forms of cranberries could include cranberries intended for fresh sales or organically grown cranberries.

(c) The committee, with the approval of the Secretary, shall prescribe such rules, regulations, and safeguards as it may deem necessary to ensure that cranberries handled under the provisions of this section are handled only as authorized.

15. Revise § 929.61 to read as follows:

§ 929.61 Outlets for excess cranberries.

(a) *Noncommercial outlets.* Excess cranberries may be disposed of in noncommercial outlets that the committee finds, with the approval of the Secretary, meet the requirements outlined in paragraph (c) of this section. Noncommercial outlets include, but are not limited to:

(1) Charitable institutions; and

(2) Research and development projects.

(b) *Noncompetitive outlets.* Excess cranberries may be sold in outlets that the committee finds, with the approval of the Secretary, are noncompetitive with established markets for regulated cranberries and meet the requirements outlined in paragraph (c) of this section. Noncompetitive outlets include but are not limited to:

(1) Any nonhuman food use; and

(2) Other outlets established by the committee with the approval of the Secretary.

(c) *Requirements.* The handler disposing of or selling excess cranberries into noncompetitive or noncommercial outlets shall meet the following requirements, as applicable:

(1) *Charitable institutions.* A statement from the charitable institution shall be submitted to the committee showing the quantity of cranberries received and certifying that the institution will consume the cranberries;

(2) *Research and development projects.* A report shall be given to the committee describing the project, quantity of cranberries contributed, and date of disposition;

(3) *Nonhuman food use.* Notification shall be given to the committee at least 48 hours prior to such disposition;

(4) *Other outlets established by the committee with the approval of the Secretary.* A report shall be given to the committee describing the project, quantity of cranberries contributed, and date of disposition.

(d) The storage and disposition of all excess cranberries withheld from handling shall be subject to the supervision and accounting control of the committee.

(e) The committee, with the approval of the Secretary, may establish rules and regulations for the implementation and operation of this section.

16. Revise § 929.62 to read as follows:

§ 929.62 Reports.

(a) Grower report. Each grower shall file a report with the committee by January 15 of each crop year, or such other date as determined by the committee, with the approval of the Secretary, indicating the following:

(1) Total acreage harvested and whether owned or leased.

(2) Total commercial cranberry sales in barrels from such acreage.

(3) Amount of acreage either in production, but not harvested or taken out of production and the reason(s) why.

(4) Amount of new or replanted acreage coming into production.

(5) Name of the handler(s) to whom commercial cranberry sales were made.

(6) Such other information as may be needed for implementation and operation of this section.

(b) Inventory. Each handler engaged in the handling of cranberries or cranberry products shall, upon request of the committee, file promptly with the committee a certified report, showing such information as the committee shall specify with respect to any cranberries and cranberry products which were held by them on such date as the committee may designate.

(c) Receipts. Each handler shall, upon request of the committee, file promptly with the committee a certified report as to each quantity of cranberries acquired during such period as may be specified, and the place of production.

(d) Handling reports. Each handler shall, upon request of the committee, file promptly with the committee a certified report as to the quantity of cranberries handled during any designated period or periods.

(e) Withheld and excess cranberries. Each handler shall, upon request of the committee, file promptly with the committee a certified report showing, for such period as the committee may specify, the total quantity of cranberries withheld from handling or held in excess, in accordance with §§ 929.49 and 929.54, the portion of such withheld or excess cranberries on hand, and the quantity and manner of disposition of any such withheld or excess cranberries disposed of.

(f) Other reports. Upon the request of the committee, with the approval of the Secretary, each handler shall furnish to the committee such other information with respect to the cranberries and cranberry products acquired and disposed of by such person as may be necessary to enable the committee to exercise its powers and perform its duties under this part.

(g) The committee may establish, with the approval of the Secretary, rules and regulations for the implementation and operation of this section.

17. Revise § 929.64 to read as follows:

§ 929.64 Verification of reports and records.

The committee, through its duly authorized agents, during reasonable business hours, shall have access to any handler's premises where applicable records are maintained for the purpose of assuring compliance and checking and verifying records and reports filed by such handler.

[FR Doc. 04–26445 Filed 11–30–04; 8:45 am]

BILLING CODE 3410–02–P

Federal Register

Wednesday,
December 1, 2004

Part III

Housing and Urban Development Department

24 CFR Part 3280
Manufactured Home Construction and Safety Standards; Proposed Rule

DEPARTMENT OF HOUSING AND URBAN DEVELOPMENT

24 CFR Part 3280

[Docket No. FR–4886–P–01]

RIN 2502–AI12

Manufactured Home Construction and Safety Standards

AGENCY: Office of the Assistant Secretary for Housing—Federal Housing Commissioner, HUD.

ACTION: Proposed rule.

SUMMARY: This proposed rule would amend the Federal Manufactured Home Construction and Safety Standards (the Construction and Safety Standards) by adopting recommendations made to HUD by the Manufactured Housing Consensus Committee (MHCC). The National Manufactured Housing Construction and Safety Standards Act of 1974 (the Act) requires HUD to publish in the **Federal Register** any proposed revised Construction and Safety Standard submitted by the MHCC. The MHCC has prepared and submitted to HUD its first group of recommendations to improve various aspects of the Construction and Safety Standards. HUD has reviewed those proposals and is in agreement with all but a few of the recommendations made by the MHCC. The recommendations on which the MHCC and HUD agree are being published here to provide notice of the proposed revisions and an opportunity for public comment. HUD is also publishing and inviting comment on the MHCC's proposed revisions that HUD did not accept, HUD's reasons for not accepting the proposals, and HUD's recommended modifications to these proposals.

DATES: *Comment Due Date:* January 31, 2005.

ADDRESSES: Interested persons are invited to submit comments regarding this rule to the Regulations Division, Office of General Counsel, Room 10276, Department of Housing and Urban Development, 451 Seventh Street, SW., Washington, DC 20410–0500. Interested persons may also submit comments electronically through either:

- The Federal eRulemaking Portal at: *http://www.regulations.gov;* or
- The HUD electronic Web site at: *http://www.epa.gov/feddocket.* Follow the link entitled View Open HUD Dockets. Commenters should follow the instructions provided on that site to submit comments electronically.

Facsimile (FAX) comments are not acceptable. In all cases, communications must refer to the docket number and title. All comments and communications submitted will be available, without revision, for public inspection and copying between 8 a.m. and 5 p.m. weekdays at the above address. Copies are also available for inspection and downloading at *http://www.epa.gov/feddocket.*

FOR FURTHER INFORMATION CONTACT: William W. Matchneer III, Administrator, Office of Manufactured Housing Programs, Room 9164, Department of Housing and Urban Development, 451 Seventh Street, SW., Washington DC 20410; telephone (202) 708–6401 (this is not a toll free number). Persons with hearing or speech impairments may access this number via TTY by calling the toll free Federal Information Relay Service at 800–877–8389.

SUPPLEMENTARY INFORMATION:

I. Background

The National Manufactured Housing Construction and Safety Standards Act of 1974 (42 U.S.C. 5401–5426) (the Act) authorizes HUD to establish and amend the Federal Manufactured Home Construction and Safety Standards (the Construction and Safety Standards) codified in 24 CFR part 3280. The Act was amended in 2000 by expanding its purposes and creating the Manufactured Housing Consensus Committee (MHCC).

As amended, the purposes of the Act (enumerated at 42 U.S.C. 5401) are ''(1) to protect the quality, durability, safety, and affordability of manufactured homes; (2) to facilitate the availability of affordable manufactured homes and to increase homeownership for all Americans; (3) to provide for the establishment of practical, uniform, and, to the extent possible, performance-based Federal construction standards for manufactured homes; (4) to encourage innovative and cost-effective construction techniques for manufactured homes; (5) to protect residents of manufactured homes with respect to personal injuries and the amount of insurance costs and property damages in manufactured housing; (6) to establish a balanced consensus process for the development, revision, and interpretation of Federal construction and safety standards for manufactured homes and related regulations for the enforcement of such standards; (7) to ensure uniform and effective enforcement of Federal construction and safety standards for manufactured homes; and (8) to ensure that the public interest in, and need for, affordable manufactured housing is duly considered in all determinations relating to the Federal standards and their enforcement.''

In addition, the amended Act generally requires HUD to establish Construction and Safety Standards that are reasonable and practical, meet high standards of protection, and are performance-based and objectively stated. In part to assist HUD, Congress established the MHCC to develop and review amendments to the Construction and Safety Standards. The Act provides specific procedures (42 U.S.C. 5403) for amending the Construction and Safety Standards.

After the passage of amendments to the Act in 2000, HUD, in accordance with the mandate of the Act, issued a request for proposals to interested organizations to be the ''Administrative Organization'' to administer the operation of the MHCC and the Construction and Safety Standards development process. After evaluating all the proposals, HUD selected and entered into a contract with the National Fire Protection Association (NFPA) to be the Administrative Organization. Following NFPA's selection and pursuant to the Act, HUD (assisted by NFPA) appointed the 21 voting members of the MHCC, seven in each of the following categories: Producers, Users, and General Interest and Public Officials, as well as one nonvoting member to represent HUD.

The MHCC held its first meeting in August of 2002 and began work on reviewing recommendations for revisions to the Construction and Safety Standards previously submitted to HUD by the NFPA. These recommendations were developed pursuant to NFPA's own consensus process. The MHCC developed its own priorities from those NFPA recommendations and approved, as part of its consensus standards development process, revisions to the Construction and Safety Standards and submitted them to HUD. HUD has reviewed the proposed revised Construction and Safety Standards recommended by the MHCC and is in agreement with almost all of them. The following is a discussion of the proposed revisions to the Construction and Safety Standards followed by an explanation of the few proposals that HUD is rejecting or modifying.

II. Proposed Changes

The proposed rule would amend the following sections of the Construction and Safety Standards and revise the incorporation by reference of the indicated reference standards.

A. Whole-House Ventilation

The proposed rule would amend § 3280.103(b) by simplifying the requirements for sizing whole-house ventilation systems of manufactured homes. The rule would establish a minimum and maximum capacity for these systems, permit a bath exhaust fan capable of meeting certain requirements to be the whole-house ventilation system, no longer accept passive-only systems, require operating instructions for the system to be included in the consumer manual, and require the operating switch to be identified with a label.

HUD is proposing to establish a maximum capacity limit for the ventilation systems to prevent possible excessive energy consumption. However, HUD is seeking input to determine if a mandated upper limit is needed or if an upper limit on fan capacity could have other unanticipated adverse impacts on furnace fan or other ventilation systems.

The proposed rule would provide for an alternative whole-house system by making it acceptable to utilize the bathroom exhaust fan as the whole-house ventilation system's exhaust, thus eliminating the need for and cost of an additional exhaust fan. It would require quiet and more durable bathroom exhaust fans that would eliminate noisy ventilation systems which are often not operated by occupants as intended, thereby limiting their effectiveness. The proposed rule would also improve the longevity of bathroom exhaust fans when used as whole-house ventilation systems and be expected to reduce service calls and premature failures, while making the systems more acceptable to occupants.

Consumer education regarding the operation and purpose of whole-house ventilation systems is important to ensuring their use by occupants. Accordingly, the proposed rule would also require instructions for the proper operation of the whole-house ventilation system and refer the occupants to a label that identifies the control that operates the system.

No passive system has been shown to provide on-demand whole-house ventilation, except in combination with a mechanical driving force. Passive ventilation without mechanical ventilation relies on stack and wind effects, which are not always present when ventilation is required.

The proposed rule would also provide reasonable positive and negative pressure limits that a system might create inside the home to ensure that the current zone related requirements can be evaluated.

B. Firestopping

The proposed rule amending § 3280.206 would change the term ''Firestopping'' to ''Fireblocking'' to be consistent with current building code terminology and application. The proposed rule would also replace and clarify existing language to better define locations where fireblocking is required. However, HUD did not accept a portion of the MHCC proposed revised Construction and Safety Standard that would permit mineral wool or loose fill insulation to be considered an acceptable fireblocking material or allow insulating materials to protect penetrations around openings in furnace or water heater compartments. (See discussion of ''Rejected or Modified Construction and Safety Standards.'')

C. Body and Frame Requirements

The proposed rule would streamline the process for implementing alternative testing procedures by amending § 3280.303(g) to eliminate the requirement that a manufacturer submit alternative testing procedures to HUD except, as discussed below, for one-piece metal roofing. This is based on the following considerations: (1) Manufacturers and their consultants generally are qualified and capable of creating alternative test procedures, (2) that all such procedures are reviewed and approved by the manufacturer's Design Approval Primary Inspection Agency (DAPIA) prior to acceptance and (3) that once approved by the DAPIA these procedures would also be subject to review by HUD. HUD is seeking comments on whether the final approval of alternate test methods should be solely delegated to DAPIAs as would be permitted by this proposal or if DAPIAs should only be allowed to provisionally approve the test method subject to HUD's approval, if the proposal should include provisions for rejection of alternative tests by HUD upon subsequent review of the approval by the DAPIA, and whether this practice could have an adverse effect on enforcing the Construction and Safety Standards.

HUD is modifying an MHCC proposal that would amend § 3280.305(c)(1)(ii) by adding a footnote to the table in (B) to permit the use of certain one-piece metal roofing without structural sheathing in the high wind area zones II and III. (See discussion of Rejected or Modified Construction and Safety Standards.)

The proposed revised Construction and Safety Standards would amend § 3280.305(c)(3)(i) by adding paragraphs (A), (B) and (C) by clarifying where middle and north zone roof load requirements would be applicable. These revisions would designate counties in certain states within the south or middle roof load zones where higher middle or north zone roof loads would be required. The current roof load zone map does not clearly delineate the borders between zones by using recognized geographic boundaries such as counties.

The proposed rule would amend § 3280.305(c)(3) by incorporating a new paragraph (iv) to add a roof load requirement for skylights to meet the roof load requirements of the zone for which it is designed. The Construction and Safety Standards currently contain no unique roof load requirements for skylights. The proposed new section would require that skylights be *tested* and listed to comply with the requirements of the American Architectural Manufacturers Association's standard AAMA 1600/I.S.7.

The proposed rule would amend § 3280.305(e) to clarify the required performance of fasteners and the connecting mechanisms for joining the major structural elements of manufactured homes and would specify a continuous load path for imposed forces to the homes foundation/anchorage system. The proposed rule would also clarify the application of the requirements to ensure that number, type of fasteners and materials used be capable of transferring all forces between elements.

The proposed rule would amend § 3280.305(e)(2) by reducing the minimum thickness requirements for steel strapping or brackets required in wind zones II and III from 26 gage (0.0179'') to 0.016.'' According to engineering analysis, the reduction in thickness should not affect the resistance of these materials to design wind forces. This is because the resistance of the fasteners, rather than the straps or brackets appears to govern the design requirements. HUD is requesting comments on whether these changes for critical connections in high wind regions should be implemented unless also supported by suitable load tests.

The proposed rule would amend § 3280.305(g)(3) to require wood panel products used as floor or subfloor materials on the exterior of the home to be rated for exterior exposure and be protected from moisture by sealing or applying nonabsorbent overlay with water resistant adhesive. These added requirements would provide protection

against deterioration of exterior floor decking materials when exposed to moisture. When certain types of decking materials, such as particleboard, become saturated with moisture, significant structural damage can occur. In addition, the requirement that panel products be ''rated'' for exterior exposure would assist in identifying the types of decking materials acceptable for use in exterior applications.

The proposed rule would amend § 3280.306(b) to require that each column support pier location required along the marriage line(s) of multi-section manufactured homes be identified at each pier location by paint, label or other acceptable methods. These location identifications are to be visible after the home is installed. Currently, there is no requirement for the manufacturer to identify the required locations for centerline pier supports under multi-section manufactured homes. Locating these main pier supports in the wrong location can cause serious damage to the structure and be costly to repair. This proposal could help reduce the chance for error on the installer's part. The cost of marking these pier support locations as proposed would be negligible compared with the potential cost savings that may be realized by all parties.

HUD is rejecting the proposed revised Construction and Safety Standard that would remove the Health Notice on Formaldehyde Emissions required by § 3280.309 of the Construction and Safety Standards. (See discussion of Rejected or Modified Construction and Safety Standards.)

D. Subpart E—Testing

The proposed revised Construction and Safety Standards would amend § 3280.401 to clarify that design live load deflection criteria does not apply when the structural assembly being evaluated does not include structural framing members.

The proposed rule would amend § 3280.402 to provide more stringent initial qualification of truss designs. Truss testing by HUD as well as industry changes in roof designs in recent years suggested the need to enhance overall roof truss performance. In addition the proposed rule would also expand and clarify the requirements for follow up testing to better assure that subsequent production of trusses will meet the requirements of the Construction and Safety Standards.

The revised truss testing procedures would also eliminate the present alternative for testing trusses under the non-destructive method, add provisions for limiting dead load deflection to L/480, revise uplift test requirements, and make other changes to the current test methods permitted by the Construction and Safety Standards. These proposals are based, in part, on a study conducted at the National Association of Home Builders Research Center, ''Comparison of Methods for Wind Uplift Load Testing of Roof Trusses for Manufactured Housing,'' September 1994, and incorporate the recommendations of a special task force consisting of manufacturers, testing organizations, and truss fabricators. The proposal revisions to the truss testing requirements were also subjected to the NFPA consensus process prior to the MHCC reviewing and recommending them to HUD.

E. Subpart F—Thermal Protection

The proposed rule would amend § 3280.504(b) to incorporate certain provisions of a waiver published in the **Federal Register** on April 24, 2002 (67 FR 20400). The waiver permits manufactured homes intended to be sited in climates that would have higher humidity levels outside than would be inside the home to install the vapor retarder outside of the home's thermal insulation. Currently, the Construction and Safety Standards would only permit the vapor retarder to be located interior to the thermal insulation regardless of the prevailing climatic conditions. The reason for this revision is to address the nature of moisture problems in warm, humid climates where the flow of moisture in the air would be from the exterior to the interior.

Homes constructed with the vapor retarder installed interior to the insulation create a cold surface conducive to condensation in conjunction with the prevalence of air conditioning. This would tend to trap any moisture that makes its way into the wall. The MHCC has advised HUD that it will be making additional recommendations for the installation of the vapor retarder in manufactured homes intended to be sited in warm, humid climates, and HUD will consider those recommendations when they are made. The proposed rule would also incorporate a map that will designate the applicable ''Humid'' and ''Fringe'(humid) zones by state and county. HUD is requesting comments on whether the final rule should also include provisions to restrict exterior wall cavities from being ventilated to the outdoors as required by the Waiver.

The proposed rule would amend § 3280.508(a) by making editorial revisions to specify the correct chapters, and portion thereof, that do not apply to manufactured homes to be consistent with the 1997 edition of the ASHRAE Handbook of Fundamentals that is being incorporated.

The proposed rule would amend § 3280.508(e) to permit window manufacturers the alternative to rate their window energy performance by utilizing National Fenestration Rating Council (NFRC) standard NFRC 100. Pursuant to a Congressional mandate, the NFRC has established a comprehensive rating, certification and labeling program for the energy performance of fenestration products. Currently, only the AAMA standard AAMA 1500 is referenced for this purpose. Inclusion of the NFRC standard would alleviate the need for those manufacturers who previously have been utilizing NFRC 100 from also having to also test to the AAMA 1500 and vice-versa.

The proposed revised Construction and Safety Standards would also revise § 3280.510 by incorporating a map that would designate the applicable Humid and Fringe zones by state and county. A reproduction of the map would be required to be included on the Heating Certificate and could also be combined with the Uo map for those homes constructed for those zones in addition to or in combination with the Uo value map. A statement, ''This home is designed and constructed to be sited only in humid or fringe climate regions as shown on the Humid and Fringe Climate Map,'' would be required in conjunction with Humid and Fringe zone map on the Heating Certificate.

F. Subpart G—Plumbing Systems

The proposed revised Construction and Safety Standards would amend § 3280.607(a) to require restricted flow faucets and showerheads and add a paragraph (b) to require the use of low water consumption water closets. This will conserve water and help assure continued availability of adequate water supplies, as well as reducing wastewater flows.

The proposed rule would include requirements for low consumption water closets (1.6 gallons per flush), and clarify that showerheads and faucets are also to meet updated requirements (maximum flow rate of 2.5 gallons per minute) for water conservation as required by the Energy Policy Act of 1992.

G. Subpart H—Heating, Cooling and Fuel Burning Systems

The proposed rule would amend § 3280.709 by adding a paragraph (h) to require the installation of a corrosion resistant water drip collection and drain

pan under each water heater. Water heater manufacturers recommend that a drain pan be installed under water heaters when they are not positioned on a concrete floor near a drain. The present rule does not require that a drain pan be provided under water heaters or that the water heater compartment be built in a protective manner such as a shower stall that would provide a method for water to drain outside the home. Water leakage in the water heater compartment could result in structural deterioration and damage to the floor sheathing and, if left unattended, could allow a water heater to fall through the floor decking. This could result in serious safety problems for the occupants. For gas water heaters, the gas line could be ruptured, which could cause a fire or explosion or the exhaust stack could become separated thereby permitting dangerous fumes to enter into the home. An electric water heater falling through the floor could cause an electric short and also result in a fire.

The proposed rule would amend § 3280.715(c) to require joints and seams of sheet metal and flexible metal ducts, including risers, trunks, crossovers, branches and plenums to be mechanically secured and made substantially air tight. The proposed rule would also require that the tapes and sealants used to seal the duct systems be applied to dry clean surfaces having no dirt, grease or oil on them. Currently the Construction and Safety Standards only specify that the joints and seams of ducts be securely fastened and made substantially airtight. Criteria would also be added for sealants and tapes to be listed in accordance with UL 181A for rigid ducts and UL181B for flexible ducts. Presently, the Construction and Safety Standards do not require sealants or tapes to be listed to any standard, but do require they not deteriorate under long exposures to elevated temperature, high humidity or excessive moisture.

H. Subpart I—Electrical Systems

The proposed rule would amend § 3280.806(d)(9) by clarifying that a receptacle outlet would be provided on a wall adjacent to and within 36 inches of the outside edge of each bathroom basin. This wall receptacle outlet would be in addition to any outlet that is part of a lighting fixture or appliance that is over a bathroom basin. This revision would no longer permit a receptacle that is integral with the light fixture over a bathroom basin to serve as the only outlet for a bathroom basin location. This change addresses safety concerns related to the permissible length of power cords for small appliances that may arise in areas in which flowing water and electrical outlets are in close proximity, such as light fixtures at bathroom basin locations.

The current Construction and Safety Standards do not specifically address the gap clearance requirements for installing an outlet box in walls and ceilings of noncombustible material. The proposed rule would amend § 3280.808(o) to provide a tolerance for the gap at the edge of a box in walls or ceilings of noncombustible material consistent with the 1996 edition of the National Electrical Code.

I. Revisions to Standards Incorporated by Reference (Reference Standards)

The following is a list of the standards incorporated by reference that would be revised by this proposed rule. Each reference standard is preceded with an indicator to identify the type of change being made. A new reference standard being added is indicated by the designation ''N,'' a reference standard being updated is indicated by the designation ''U,'' while a reference standard being deleted is indicated by the designation ''DELETED.'' The sections of the Construction and Safety Standards that would be amended by each modification are also shown on the right of each reference standard being added, updated, or deleted.

BILLING CODE 4210–27–P

U			
AA	**1994**	**Aluminum Design Manual, Section 1** (Note: title change only)	**3280.304**
N			
AAMA/WDMA 101/IS 2-97	1997	Voluntary Specifications for Aluminum, Vinyl (PVC) and Wood Windows and Glass Doors –ANSI Approved	3280.304(b)(1) 3280.403(b)&(e) 3280.404 (b)
U			
AAMA 1701.2	1995	Primary Window and Sliding Glass Door Voluntary Standard for Utilization in Manufactured Housing	3280.403(b) 3280.403(e) 3280.403(e)(2) 3280.404(b)
U			
AAMA 1702.2	1995	Swinging Exterior Passage Doors Voluntary Standard for Utilization in Manufactured Housing	3280.405(b) 3280.405(e) 3280.405(e)(2)
U			
AFPA	1997	Allowable Stress Design (ASD) Manual for Engineered Wood Construction including National Design Specifications for Wood Construction, 1997 Edition, with Supplement, Design Values for Wood Construction	3280.304(b)(1)
U			
AFPA	1993	Design Values for Joists and Rafters	3280.304(b)(1)
U			
AISI	1996	Specification for the Design of SG971 Cold-Formed Steel Structural Members	3280.304(b)(1) 3280.305(i)(1)
DELETE			
ANSI C73.17	1972	Dimension of Caps, Plugs and Receptacles, Ground Type (Note- Replaced by NEMA WD-6 see ANSI/NEMA WD-6)	3280.803(g)
U			
ANSI Z21.1.1	1996	Household Cooking Gas Appliances	3280.703
U			
ANSI Z21.5.1	1995	Gas Clothes Dryers Volume 1	3280.703

U			
ANSI Z21.10.1a	1993	Gas Water Heaters-Volume 1, Storage Water Heaters with Input Ratings of 75,000 BTU per hour or Less	3280.703
U			
ANSI Z21.15	1997	Manually Operated Gas Valves for Appliances, Appliance Connector Valves and Hose End Valves	3280.703
U			
ANSI Z21.20	1997	Automatic Gas Ignition Systems and Components	3280.703
U			
ANSI Z21.21	1995	Automatic Valves for Gas Appliances	3280.703
U			
ANSI Z21.23	1993	Gas Appliance Thermostats	3280.703
U			
ANSI Z21.24	1997	Connectors for Gas Appliances	3280.703
U			
ANSI Z21.40.1	1996	Gas Fired Heat Activated, Air Conditioning and Heat Pump Appliances	3280.703 3280.714(a)(2)
U			
ANSI Z21.47	1995	Gas-Fired Central Furnaces (Note - Incorporates provisions of Z21.64 now discontinued, that are related to direct vent)	3280.703

DELETE

ANSI Z21.64	1990	Direct Vent Central Furnaces With Addendum Z21.64a-1992 (Discontinued-Now part of Z21.47)	3280.703
U			
ANSI Z34.1	1993	Third Party Certification	3280.403(e)(1) 3280.405(e)(1)
N			
ANSI Z124.5	1997	Plastic Toilet (water closet) Seats	3280.604(a)
N			
ANSI Z124.7	1997	Prefabricated Plastic Spa Shells	3280.604(a)
N			
ANSI Z124.8	1990	Bathtub Liners	3280.604(a)
N			
ANSI Z124.9	1994	Plastic Urinal Fixtures	3280.604(a)
U			
ANSI/AHA A135.4	1995	Basic Hardboard	3280.304(b)(1)
U			
ANSI/AHA A135.5	1995	Prefinished Hardboard Paneling	3280.304(b)(1)
U			
ANSI/AHA A135.6	1998	Hardboard Siding	3280.304(b)(1)
U			
ANSI/CPA A208.1	1999	Wood Particleboard	3280.304(b)(1)
N			
ANSI/ ASME A112.4.1	1993	Water Heater Relief Valve Drain Tubes (Reaffirmed 2002)	3280.604(a)

N			
ANSI/ ASME A112.4.3	1999	Plastic Fittings for Connecting Water Closets to the Sanitary Drainage System	3280.604(a)
DELETE			
ANSI/ ASME A112.18.1M	1989	Plumbing Fixture Fittings	3280.604(a)
N			
ANSI/ ASME A112.18.3	1996	Performance Requirements for Backflow Devices and Systems in Plumbing Fixture Fittings	3280.604(a)
N			
ANSI/ ASME A112.18.6	1999	Flexible Water Connectors	3280.604(a)
N			
ANSI/ ASME A112.18.7	1999	Deck Mounted Bath/Shower Transfer Valves	3280.604(a)
N			
ANSI/ASME A112.19.9	1998	Non-Vitreous Ceramic Plumbing Fixtures	3280.604(a)
N			
ANSI/ASME A112.19.10	1994	Dual Flush Devices for Water Closets	3280.604(a)
N			
ANSI/NEMA WD-6	1997	Wiring Devices-Dimensional Requirements (Replaces C73.17 of the same title.)	3280.803
N			
ANSI/61-NSF	1997	Drinking Water Systems	3280.604(b)(2)

		Components-Health Effects	
DELETE			
NWWDA IS 1-87		Wood Flush Doors	3280.394(b)(1) 3280.405(c)(1)
DELETE			
ANSI/ NWWDA IS-2	1987	Wood Windows (This standard is replaced by AAMA/WDMA 101/ IS 2-1997 NWWDA [National Wood Window & Door Association] is now the WDMA [Window & Door Manufacturers Association])	3280.304(b)(1)
DELETE			
ANSI/NWWDA IS-3	1988	Wood Sliding Patio Doors *(This standard is replaced by AAMA/WDMA 101/IS 2-1997)*	3280.304(b)(1)
DELETE			
NWWDA IS 4-88		Water Repellent Preservative Non pressure treatment for Millwork	3280.304(b)(1)
DELETE			
ANSI/TPI 1	1990	National Design Standard for Metal Plate Connected Wood Truss Construction	3280.304(b)(1)
DELETE			
APA PRP E108 E445N	1989	Performance Standards and Policies (standard discontinued)	3280.304(b)(1)
U			
APA E 30M	1996	Design/Construction Guide, Residential and Commercial Structures	3280.304(b)(1)

U			
APA S 811M	1995	Design and Fabrication of Plywood Curved Panels PDS supplement #1	3280.304(b)(1)
U			
APA S 812P	1996	Design and Fabrication of Glued Plywood Lumber Beams PDS supplement #2	3280.304(b)(1)
U			
APA U 813K	1996	Design and Fabrication of Plywood Stressed Skin Panels PDS supplement #3	3280.304(b)(1)
U			
APA H 815E	1995	Design and Fabrication of All Plywood Beams, PDS supplement # 5	3280.304(b)(1)
U			
APA 51	1997	Plywood Design Specification	3280.304(b)(1)
N			
ASCE-8-91	1991	Specification for the Design of Cold-Formed Stainless Steel Structural Members	3280.304(b)(1)
N			
ASCE-19-96	1996	Structural Applications of Steel Cables for Buildings	3280.304(b)(1)
U			
ASHRAE	1997	ASHRAE Handbook of Fundamentals I.P. Edition	3280.508 3280.511
N			
ASSE/ANSI 1051	1998	Air Admittance Valves for Plumbing Drainage Systems-Fixture and Branch Devices	3280.604(a)

U			
ASTM A539-99	1999	Standard Specification for Electric-Resistance- Welded Coiled Steel Tubing for Gas and Fuel Oil Lines	3280.703 3280.705(b)(4)
U			
ASTM B280-95	1995	Standard Specification for Seamless Copper Tube for Air Conditioning and Refrigeration Field Service	3280.703 3280.705(b)(3) 3280.706(b)(3)
U			
ASTM C36M-99	1995	Standard Specification for Gypsum Wallboard	3280.304(b)(1)
U			
ASTM D4442-99	1999	Standard Test Methods for Direct Moisture Content Measurement of Wood and Wood-Base Materials	3280.304(b)(1)
DELETE			
ASTM E84-91	1991	Standard Test Method for Surface Burning Characteristics of Building Materials	3280.203(a)
U			
ASTM E96-95	1995	Standard Test Methods for Water Vapor Transmission of Materials	3280.504(a)
U			
ASTM E162-94	1994	Standard Test Method for Surface Flammability of Materials Using a Radiant Heat Energy Source	3280.203(a)
U			
ASTM E773-97	1997	Standard Test Methods for Accelerated Weathering of Sealed Insulating Glass Units	3280.403(d)(2)

U			
ASTM E774-97	1997	Standard Specification for the Classification of Durability of Sealed Insulating Glass Units	3280.403(d)(2)
U			
ASTM E1333-96	1996	Standard Test Method for Determining Formaldehyde Concentrations in Air and Emission Rates from Wood Products Using a Large Chamber	3280.406(b)
U			
HPVA HP SG-96	1996	Structural Design Guide for Hardwood Plywood Wall Panels Design Guide	3280.304(b)(1)
U			
ANSI/ HPVA HP-1	1994	Standard for Hardwood and Decorative Plywood, ANSI Approved January 5, 1995	3280.304(b)(1)

DELETE			
HUD-FHA UM -25d-73	1973	Application and Fastening Schedule: Power-Driven, Driven Fasteners, Use of Materials Bulletin UM-25d	3280.304(b)(1)
U			
IAPMO TSC 09	1997	Gas Supply Connectors for Manufactured Homes	3280.703
N			
IAS LC 1			3280.703
U			
IIT J 6461	1989	Development of Mobile Home Fire Test Methods to Judge the Fire-Safe Performance of Foam Plastic Sheathing and Cavity Insulation (Note- This is an editorial revision to insert the date of publication only)	3280.207(a)
N			
NER-272 9/	1997	Power Driven Staples and Nails for use in all Types of Buildings Construction. (This is published by the National Evaluation Service)	3280.304(b)
U			
NFPA 31	1997	Installation of Oil-Burning Equipment	3280.703 3280.707(f)
U			
NFPA 54	1996	Natural Fuel Gas Code	3280.703
U			
NFPA 58	1995	Standard for the Storage and Handling of Liquefied Petroleum Gases	3280.703 3280.704(b)(5)(i)

U			
NFPA 70	1996	National Electrical Code	3280.801(a) 3280.801(b) 3280.803(k)(1) (k)(3) 3280.804(a) 3280.805(a)(3) 3280.806(a)(2) 3280.807(c) 3280.808(a)(m)&(q) 3280.811(b)
U			
NFPA 220	1995	Standard on Types of Building Construction (This standard is referenced in 24 CFR 3280 to provide definitions of "noncombustible material" and "limited combustible material")	3280.202(a)(4) 3280.202(a)(5)
N			
NFPA 255	1996	Standard Method of Test of Surface Burning Characteristics of Building Materials. (This standard would replace ASTM E84)	3280.203(a)
N			
NFRC-100	1997	Procedure for Determining Fenestration Product U Factors	3280.508(e)
U			
PS 1-95	1999	Voluntary Product Standard, Construction and Industrial Plywood	3280.304(b)(1)
U			
PS 2-92	1996	Voluntary Product Standard Performance Standard for Wood-Based Structural-Use Panels (This standard replaces APA PRP	3280.304(b)(1)

		108-86, which has been discontinued.)	
U			
SJI 40th Edition		Standard Specification and Load Tables for Steel Joist and Steel Joist Girders	3280.304(b)(1)
U			
UL 94	1996	Test for Flammability of Plastic Materials for Parts in Devices and Appliances, Fifth Edition-October 29, 1996	3280.715(e)(1)
U			
UL 103	1996	Factory-Built Chimneys for Residential Type and Building Heating Appliances, Ninth Edition	3280.703
U			
UL 109	1997	Tube Fittings for Flammable and Combustible Fluids, Refrigeration Service & Marine Use, Sixth Edition-June 19, 1997	3280.703
U			
ANSI/UL 127	1998	Factory-Built Fireplaces, Seventh Edition-May 16, 1998	3280.703
U			
ANSI/UL 174	1997	Household Electric Storage Tank Water Heaters	3280.703
U			
UL 181	1998	Factory Made Air Ducts and Air Connectors	3280.703 3280.715(e)

N			
UL 181A	1998	Closure Systems for Use with Rigid Air Ducts and Air Connectors	3280.703 3280.715(c)
N			
UL 181B	1998	Closure Systems for Use with Flexible Air Ducts and Air Connectors	3280.703 3280.715(c)
U			
UL 307A	1998	Liquid Fuel-Burning Heating Appliances for Manufactured Homes and Recreational Vehicles	3280.703 3280.707(f)
U			
UL 307B	1998	Gas Burning Heating Appliances for Manufactured Homes and Recreational Vehicles	3280.703
U			
UL 311	1998	Roof Jacks for Manufactured Homes and Recreational Vehicles	3280.703
U			
UL 441	1997	Gas Vents	3280.703
DELETE			
UL 465	1987	Central Cooling Air Conditioners (This standard discontinued and replaced by UL 1995)	3280.703
U			
ANSI/UL 569	1998	Pigtail and Flexible Hose Connectors for LP-Gas	3280.703 3280.705

U			
UL 737	1998	Fireplace Stoves	3280.703
DELETE			
UL 1025	1991	Electric Air Heaters (This standard discontinued and replaced by UL 2021)	3280.703
U			
ANSI/UL 1042	1998	Electric Baseboard Heating Equipment	3280.703
U			
UL 1482	1998	Solid-Fuel Type Room Heaters	3280.703
N			
UL 1995	1995	Heating and Cooling Equipment, Second Edition-September 29, 1995 (Replaces UL 465, UL 559 and UL 1096)	3280.703
N			
UL 2021	1998	Fixed and Location-Dedicated Electric Room Heaters, (Replaces UL 1025)	3280.703

BILLING CODE 4210–27–C

III. Rejected or Modified Construction and Safety Standards

After reviewing the proposed revised Construction and Safety Standards recommended by the MHCC, HUD had concerns regarding a few of the MHCC's recommendations. The MHCC and HUD had the opportunity to discuss those concerns during the June 7, 2004, telephone conference meeting announced in the **Federal Register** on May 19, 2004 (69 FR 28944). As a result of that discussion, several of those concerns were resolved and are not at issue in this proposed rule. This section of the preamble discusses only those recommendations on which the MHCC and HUD did not reach agreement. Following HUD's discussion of its reasons for not accepting or modifying a recommendation, the preamble and regulatory text of the recommendation as submitted to HUD by the MHCC is published in full. HUD is specifically soliciting comments and feedback from the public on both the MHCC's recommendations as submitted to HUD, and HUD's proposed rejections and modifications of these recommendations.

Other editorial modifications to the document HUD received from the MHCC have also been made throughout this proposed rule to be consistent with formatting of **Federal Register** documents or for consistency with other requirements of the Construction and Safety Standards. The MHCC and HUD agreed that the convenience of the public would be better served by publishing a single proposed rule document, rather than publishing both the entire MHCC document and HUD's edited version of the MHCC document, as long as the original text of the MHCC recommendations that have been rejected or modified by HUD is included in the published document. In addition, the use of metric equivalent units was not incorporated in the proposed rule at this time, since it would be necessary to revise the entire standard for metric equivalents and not just the sections being recommended for revision. HUD requests comment on the use of metric units of measurement in the Construction and Safety Standards. Comment is specifically requested on whether English and metric units should be used concurrently or whether only one or the other should be used. HUD is also interested in any information on whether there are circumstances in which the use of one of these measurement systems would be more appropriate than the use of the other.

The following discussion provides HUD's reasons for rejecting one of the MHCC's proposed revised Construction and Safety Standards and for making modifications to two other recommendations of the MHCC. The text of the MHCC recommendation being rejected or modified follows HUD's discussion in each case.

Rejected Construction and Safety Standard: Formaldehyde Health Notice

HUD is rejecting the MHCC proposal to remove the requirement in the Construction and Safety Standards for the Health Notice on formaldehyde emissions to be prominently displayed in a temporary manner in each manufactured home (24 CFR 3280.309). The MHCC did not provide or reference any data or studies in support of the recommendation to remove the Health Notice requirement and HUD, therefore, has no basis for taking such action. The Construction and Safety Standard that requires this notice is supported by a substantial factual and scientific record. A determination to no longer require the notice would similarly require substantial factual and scientific support.

The law requires a federal agency to follow similar procedures for the rescission of rules as it does for their promulgation. In reviewing a Federal agency's decision to rescind its rules, the courts consider three elements: (1) Whether the record supports the factual conclusions upon which the rule is based, (2) the reasonableness or rationality of the rule, and (3) the extent to which the agency has adequately articulated the basis for its conclusions. For HUD to rescind this rule without the necessary technical or scientific support would violate these factors and risk the decision being challenged as arbitrary and capricious. See *Motor Vehicle Mfrs. Ass'n* v. *State Farm Mut. Auto. Ins. Co.,* 463 U.S. 29, 41–42, 77 L. Ed. 2d 443, 103 S. Ct. 2856 (1983).

Further, while the materials that emit formaldehyde and are used in the construction of manufactured homes are similar to those in modular homes and on-site homes, manufactured homes are permitted to use urea formaldehyde resins in particleboard and plywood panels, which have a greater propensity to emit formaldehyde than the materials used to construct modular or on-site homes.

HUD recognizes that improvements have been made in particleboard and plywood panel processing and construction resulting in lower emission levels than from panels bonded with urea-formaldehyde resin systems that were available at the time of the implementation of the formaldehyde emission requirements. However, as indicated in the preamble of the final rule on formaldehyde in 1984, there is a sector of the population that has greater sensitivity to and is at more risk of formaldehyde's irritant effects and that will react adversely to formaldehyde at extremely low levels of exposure. This includes the elderly, young children, and individuals with a history of asthma, allergies or lung problems. The purpose of the Health Notice is to advise prospective purchasers that the home contains materials that emit formaldehyde and to describe acute symptoms that may occur under formaldehyde exposure for those individuals who may be at greater risk.

The Act, at sec. 604(e)(1) (42 U.S.C. 5403(e)(1)), requires both the MHCC in recommending Construction and Safety Standards and HUD in establishing Construction and Safety Standards to:

> consider relevant available manufactured home construction and safety data, including the results of research, development, testing, and evaluation activities conducted pursuant to this title, and those activities conducted by private organizations and other governmental agencies to determine how to best protect the public[.]

To assist both the MHCC and HUD in addressing this statutory provision, which is consistent with the concerns discussed above for now rejecting this proposed revision, HUD specifically requests the submission of data and studies developed since the adoption of the Health Notice requirement that would be relevant to the MHCC's and HUD's consideration of revisions to this requirement. HUD solicits any new evidence of the impact on, or change in, health related concerns that are a result of improved manufacturing processes for manufactured housing materials and strongly emphasizes the importance of science-based rulemaking for the issues present here.

The MHCC's recommendation was to remove 24 CFR 3280.309, entitled, ''Health Notice on formaldehyde emissions,'' and the MHCC's preamble discussion of this recommendation stated:

> The proposed rule would amend the Standards by deleting § 3280.309 and thereby remove the Health Notice on Formaldehyde Emissions. The materials used in manufactured homes are the same as those used in site-built homes and modular homes, neither of which requires such a health notice. There is no evidence that this Health Notice is instrumental in protecting the public or in preventing litigation. Since 1985, when the formaldehyde product standards for plywood and particleboard became effective, there has been significant progress in lowering formaldehyde levels in

manufactured homes. The Health Notice serves only as a sales deterrent, while contributing to existing misunderstanding by the public regarding health related issues associated with formaldehyde emissions.

HUD's Modifications to the MHCC's Proposed Revised Construction and Safety Standards

Fireblocking

HUD is modifying the proposed recommendation from the MHCC on fireblocking because the provisions for the use of mineral wool or cellulose insulation have not been adequately evaluated for transportation effects that could cause settling or shifting of those materials. While these materials may be acceptable for on-site construction, their performance has not been thoroughly evaluated for all applications where fireblocking is required in manufactured homes. Further, recent site investigations where insulating materials were inappropriately used at penetrations for heating vents have found voids in the insulation likely caused by transportation around the pipes, which would permit a fire to spread from the furnace or water heater compartment to the ceiling/roof area.

The preamble language submitted by the MHCC on this issue is:

B. Firestopping

The proposed rule amending § 3280.206 would change the term ''Firestopping'' to ''Fireblocking'' to be consistent with current building code terminology and application. Further, criteria are added for testing loose-fill insulation that provides a performance-based alternative for the use of such insulation. Both glass fiber and cellulose loose-fill insulations have already been so tested. The proposed rule would also replace and clarify existing language to better define locations where fireblocking is required. Guidance is provided on how to fireblock a penetration while allowing an alternate method of filling the entire concealed space to cut off the concealed draft opening.

The regulatory language submitted by the MHCC on this issue follows. HUD accepted all of the MHCC's recommendations for revising 24 CFR 3280.206 except paragraphs (b)(2) and (b)(3), and the second sentence of paragraph (c)(3):

5. Revise § 3280.206 to read as follows:

§ 3280.206 Fireblocking

(a) *General.* Fireblocking shall comply with Section 206. The integrity of all fireblocking materials shall be maintained.

(b) *Fireblocking Materials.* Fire blocking shall consist of the following materials.

(1) Minimum 1 in. (25.4 mm) nominal lumber, 5/16 in. (8 mm) thick gypsum board, or the equivalent.

(2) Mineral wool or unfaced glass fiber batts or blankets shall be allowed as fireblocking where the material fills the entire cross section of the concealed space to minimum height of 16 in. (406 mm) measured vertically. The mineral wool or unfaced glass fiber batts or blankets shall be installed so as to be retained securely in place.

(3) Loose-fill insulation shall be allowed as fireblocking where it has been specifically tested in the form and manner intended for use to demonstrate its ability to remain in place and to retard the spread of fire and hot gasses.

(4) Other Listed or Approved Materials.

(c) Fireblocking Locations.

(1) Fireblocking shall be installed in concealed spaces of stud walls, partitions, and furred spaces at the floor and ceiling levels. Concealed spaces shall not communicate between floor levels. Concealed spaces shall not communicate between a ceiling level and a concealed roof area, or an attic space.

(2) Fireblocking shall be installed at the interconnection of a concealed vertical space and a concealed horizontal space that occurs (i) between a concealed wall cavity and the ceiling joists above, (ii) at soffits, drop ceilings, cover ceilings and similar locations.

(3) Fireblocking shall be installed around the openings for pipes, vents and other penetrations in walls, floors and ceilings of furnace and water heater spaces. Fireblocking shall completely fill the opening around the penetration or shall completely fill the cavity or concealed space into which the penetration is made. Pipes, vents, and other penetrations that cannot be moved freely within their opening shall be considered fireblocked. Materials used to fireblock heat producing vent penetrations shall be noncombustible or limited combustible types.

One-Piece Metal Roofing in High Wind Areas

HUD is modifying the proposal recommended by the MHCC for one-piece metal roofing installed in high wind areas to be consistent with the provisions of Interpretative Bulletin I–2–98. Specifically, HUD is modifying proposed footnote 9 to the Table of Design Wind Pressures in 24 CFR 3280.305 of the Construction and Safety Standards to indicate that test methods must be approved by HUD and comply with the requirements of 24 CFR 3280.303(c) and (g) and 3280.401 of the Construction and Safety Standards. This would further clarify that tests would need to meet the structural load test requirements of the Construction and Safety Standards and that testing methods and procedures would need to be approved by HUD. Therefore, proposed footnote 9 is being modified to read as follows:

''9. One-piece metal roofing capable of resisting the design wind pressures in this Table for components and cladding (exterior roof coverings) is allowed to be used without structural sheathing provided it is tested using procedures that have been approved by HUD and meets all requirements of §§ 3280.303(c) and (g) and 3280.401.''

The preamble language submitted by the MHCC on this issue is:

The proposed rule would amend § 3280.305(c)(1)(ii) by adding a footnote to the table in (B) to permit the use of certain one-piece metal roofing without structural sheathing in the high wind area zones II and III. One-piece metal roofing when subjected to the negative pressures specified in the table performs as a structural catenary membrane. Numerous tests have shown this design to be viable and effective. In fact, these tests show that the design has superior load resistance capacity to the shingle roof with sheathing option which is currently allowed without having to be evaluated for the loads in the table.

The regulatory language of the footnote submitted by the MHCC on this issue is:

9. One piece metal roofing, tested without structural sheathing, using the design wind pressures specified in the table for component and cladding (exterior roof coverings), are allowed to be used without structural sheathing.

IV. Findings and Certifications

Regulatory Planning and Review

The Office of Management and Budget (OMB) reviewed this rule under Executive Order 12866 (entitled ''Regulatory Planning and Review''). OMB determined that this rule is a ''significant regulatory action'' as defined in section 3(f) of the Order (although not an economically significant regulatory action, as provided under section 3(f)(1) of the Order). Any changes made to the rule subsequent to its submission to OMB are identified in the docket file, which is available for public inspection in the Regulations Division, Room 10276, Office of General Counsel, Department of Housing and Urban Development, 451 Seventh Street, SW., Washington, DC 20410–0500.

Paperwork Reduction Act

The proposed new information collection requirements contained in §§ 3280.103(b), 3280.306 (b)(1) and 3280.510 (a)(b)(c) have been submitted to the Office of Management and Budget (OMB) for review under the Paperwork Reduction Act of 1995 (44 U.S.C. 3501–3520). Under this Act, an agency may not conduct or sponsor, and a person is not required to respond to, a collection of information unless the collection displays a valid control number. OMB has issued HUD the control number 2502–0253 for the information collection requirements under the current Manufactured Housing

Construction and Safety Standards Program.

The public reporting burden for this new collection of information is estimated to include the time for reviewing the instructions, searching existing data sources, gathering and maintaining the data needed, and completing and reviewing the collection of information.

Information on the estimated public reporting burden is provided in the following table:

Information collection	Number of respondents	Responses per respondent	Total annual responses	Hours per response	Total hours
Whole-house ventilation instructions	200	850	170,000	.012	2040
Mark location of whole-house ventilation	200	850	170,000	.012	2040
Centerline support locations	200	510	102,000	.033	3366
Map size on Heat Loss Certificate	200	850	170,000	(*)	10
Humid zone designation	200	150	30,000	(*)	10
Total burden					7466

* Certificate already required. One-time alteration change.

In accordance with 5 CFR 1320.8(d)(1), HUD is soliciting comments from members of the public and affected agencies concerning the proposed collection of information to:

(1) Evaluate whether the proposed collection of information is necessary for the proper performance of the functions of the agency, including whether the information will have practical utility;

(2) Evaluate the accuracy of the agency's estimate of the burden of the proposed collection of information;

(3) Enhance the quality, utility, and clarity of the information to be collected; and

(4) Minimize the burden of the collection of information on those who are to respond, including through the use of appropriate automated collection techniques or other forms of information technology, *e.g.*, permitting electronic submission of responses.

Interested persons are invited to submit comments regarding the information collection requirements in this proposal. Under the provisions of 5 CFR 1320, OMB is required to make a decision concerning this collection of information between 30 and 60 days after today's publication date. Therefore, any comment on the information collection requirements is best assured of having its full effect if OMB receives the comment within 30 days of today's publication. This time frame does not affect the deadline for comments to the agency on the proposed rule, however. Comments must refer to the proposal by name and docket number (FR–4886–P–01) and must be sent to:

Mark D. Menchik, HUD Desk Officer, Office of Management and Budget, New Executive Office Building, Washington, DC 20503, *Mark_D._Menchik@omb.eop.gov*.

and

Kathleen O. McDermott, Reports Liaison Officer, Office of the Assistant Secretary for Housing-Federal Housing Commissioner, Department of Housing and Urban Development, 451 Seventh Street, SW. Room 9116, Washington, DC 20410–8000.

Unfunded Mandates Reform Act

Title II of the Unfunded Mandates Reform Act of 1995 (2 U.S.C. 1531–1538) establishes requirements for Federal agencies to assess the effects of their regulatory actions on State, local, and tribal governments and the private sector. This rule will not impose any Federal mandates on any State, local, or tribal government or the private sector within the meaning of the Unfunded Mandates Reform Act of 1995.

Environmental Review

A Finding of No Significant Impact with respect to the environment has been made in accordance with HUD regulations at 24 CFR part 50, which implement section 102(2)(C) of the National Environmental Policy Act of 1969 (42 U.S.C. 4332(2)(C)). The Finding of No Significant Impact is available for public inspection between the hours of 8 a.m. and 5 p.m. weekdays in the Regulations Division, Office of General Counsel, Room 10276, Department of Housing and Urban Development, 451 Seventh Street, SW., Washington, DC 20410–0500.

Impact on Small Entities

The Secretary, in accordance with the Regulatory Flexibility Act (5 U.S.C. 605(b)), has reviewed and approved this proposed rule and in so doing certifies that the rule would not have a significant economic impact on a substantial number of small entities. The rule would regulate establishments primarily engaged in making manufactured homes (NAICS 32991). The Small Business Administration's size standards define an establishment primarily engaged in making manufactured homes as small if it does not exceed 500 employees. Of the 222 firms included under this NAICS definition, 198 are small manufacturers that fall below the small business threshold of 500 employees. The proposed rule will apply to all of the manufacturers. The rule would, thus, affect a substantial number of small entities. However, based on an analysis of the costs and the fact that a small manufacturer would just as likely produce homes at the higher end of the cost spectrum as would a major producer, evaluating the effect of the increase is not discernible based on the size of the manufacturing operation. For the reasons stated below, HUD knows of no instance of a manufacturer with fewer than 500 employees that would be significantly affected by this rule.

HUD with the concurrence of the MHCC has conducted an economic cost impact analysis for this rule. A copy of the economic analysis is available for public inspection and copying between 8 a.m. and 5 p.m. weekdays at the Regulations Division, Office of General Counsel, Room 10276, Department of Housing and Urban Development, 451 Seventh Street, SW., Washington, DC 20410–0500. The economic analysis concluded the potential cost impact, based on a per home cost determined to be approximately $77.28 multiplied by 170,000 homes produced in a year, is $13,137,600 annually. In addition, the cost of the paperwork burden associated with this rule is estimated to be approximately $112, 000 for the entire industry, which is less than an additional $1.00 per unit. Additional information about the paperwork burden can be found in the PRA section of the preamble. This does not represent a significant economic effect on either an industry-wide or per unit basis.

This relatively small increase in cost for the manufacturer associated with this proposed rule would not impose a

significant burden for a small business for homes that can cost the purchaser between $40,000 and $100,000. Therefore, although this rule would affect a substantial number of small entities, it would not have a significant economic impact on them.

Notwithstanding HUD's determination that this rule would not have a significant economic effect on a substantial number of small entities, HUD specifically invites comments regarding this certification and any less burdensome alternatives to this rule that will meet HUD's objectives as described in this preamble.

Executive Order 13132, Federalism

Executive Order 13132 (entitled ''Federalism'') prohibits, to the extent practicable and permitted by law, an agency from promulgating a regulation that has federalism implications and either imposes substantial direct compliance costs on state and local governments and is not required by statute, or preempts state law, unless the relevant requirements of section 6 of the Executive Order are met. This rule does not have federalism implications and does not impose substantial direct compliance costs on state and local governments or preempt state law within the meaning of the Executive Order.

V. Incorporation by Reference

Before HUD issues a final rule, these reference standards will be approved by the Director of the **Federal Register** for incorporation by reference in accordance with 5 U.S.C. 552(a) and 1 CFR part 51. Copies of these standards may be obtained from the following organizations:

AFPA—American Forest and Paper Association, 1111 19th Street NW., Washington, DC 20036, (202) 463–2700, fax (202) 463–5180, *http://www.afandpa.org.*

AHA—American Hardboard Association, 1210 West Northwest Highway, Palatine, Illinois 60067, (847) 934–8800, fax (847) 934–8803, *http://www.hardboard.org.*

AISI—American Iron & Steel Institute, 1101 17th Street, NW., Washington, DC 20036, (202) 452–7100, fax (202) 463–6573, *http://www.aisc.org.*

ANSI—American National Standards Institute, 11 West 42nd Street, New York, New York 10036, (212) 642–4900, fax (212) 398–0023, *http://www.ansi.org.*

APA—The Engineered Wood Association, 7011 South 19th Street, Tacoma, Washington 98411, (253) 565–6600, fax (253) 565–7265, *http://www.apawood.org.*

ASCE—American Society of Civil Engineers, 1015 15th Street, NW., Washington, DC 20005, (202) 789–2200, fax (202) 289–6797, *http://www.asce.org.*

ASHRAE—American Society for Heating, Refrigeration & Air Conditioning Engineers, 1791 Tuillie Circle NE., Atlanta, Georgia 30329, (404) 636–8400, fax (404) 321–5478, *http://www.ashrae.org.*

ASME—American Society of Mechanical Engineers, 345 East 47th Street, New York, New York 10017, (212) 705–8570, fax (212) 705–8599, *http://www.asme.org.*

ASSE—American Society of Sanitary Engineering, P.O. Box 40362, Bay Village, Ohio 44140, (216) 835–3040, fax (216) 835–3488, *http://www.asse-plumbing.org.*

ASTM—American Society for Testing and Materials, 100 Barr Harbor Drive, West Conshohocken, Pennsylvania 19428, (610) 832–9500, fax (610) 832–9555, *http://www.astm.org.*

CSA (IAS)—CSA International (formerly International Approval Services), 8501 East Pleasant Valley Road, Cleveland, Ohio 44131, (216) 524–4990, fax (216) 642–3463, *http://www.csa-international.org.*

CPA—Composite Panel Association (formerly the National Particle-board Association) 18928 Premier Court, Gaithersburg, MD 20879–1574, (301) 670–0604, fax (301) 840–1252, *http://www.pbmdf.com.*

HPVA—Hardwood Plywood and Veneer Association, 1825 Michael Faraday Drive, Reston, Virginia 22090, (703) 435–2900, fax (703) 435–2537, *http://www.hpva.org.*

HUD—Department of Housing and Urban Development, Office of Consumer & Regulatory Affairs, 451 Seventh Street, SW., Washington, DC 20410, (202) 708–6423, fax (202) 708–4213.

IAPMO—International Association of Plumbing and Mechanical Officials, 20001 Walnut Drive South, Walnut, California 91789, (909) 595–8449, fax (909) 594–1537, *http://www.iapmo.org.*

IIT—IIT Research Institute, 10 West 35th Street, Chicago, Illinois 60616, (312) 567–3000, fax (312) 567–4167, *http://www.iitri.org.*

NEMA—National Electrical Manufacturers Association, 1300 North 17th Street, Suite 1847, Rosslyn, VA 22209, (703) 841–3200, fax (703) 841–5900, *http://www.nema.org.*

NER—International Code Council Evaluation Service [Previously known as National Evaluation Service], 5360 Workman Mill Road, Whittier CA 90601–0543.

NFPA—National Fire Protection Association, Batterymarch Park, Quincy, Massachusetts 02269, (617) 770–3000, fax (617) 770–0700, *http://www.nfpa.org.*

NFRC—National Fenestration Rating Council, Incorporated, 1300 Spring Street, Suite 120, Silver Spring, MD 20910, (301) 589–6372, fax (301) 588–0854, *http://www.nfrc.org.*

NSF—NSF International, P.O. Box 130140, Ann Arbor, Michigan 48113, (313) 769–8010, fax (313) 769–0109, *http://www.nsf.org.*

PS—National Institute of Standards & Technology, Voluntary Product Standards, Gaithersburg, Maryland 20810, (301) 975–2000, fax (301) 926–1559, *http://www.nist.gov.*

SJI—Steel Joist Institute, 1205 48th Avenue North, Suite A, Myrtle Beach, South Carolina 29577, (803) 626–1995, fax (803) 449–1343, *http://www.steeljoist.org.*

TPI—Truss Plate Institute, 583 D'Onofrio Drive, Suite 200, Madison, Wisconsin 53719, (608) 833–5900, fax (608) 833–4360, *http://www.tpinst.org.*

UL—Underwriters Laboratories, 333 Pfingsten Road, Northbrook, Illinois 60062, (847) 272–8800, fax (847) 509–6257, *http://www.ul.com.*

WDMA (NWWDA)—Window & Door Manufacturers Association (formerly the National Wood Window & Door Association), 1400 East Touhy Avenue, Des Plaines, Illinois 60018, (847) 299–5200, fax (847) 299–1286, *http://www.wdma.com.*

Catalog of Federal Domestic Assistance

The Catalog of Federal Domestic Assistance number for Manufactured Housing Construction and Safety Standards is 14.171.

List of Subjects in 24 CFR Part 3280

Housing standards, Manufactured homes.

Accordingly, for the reasons stated in the preamble, HUD proposes to amend 24 CFR part 3280 as follows:

PART 3280—MANUFACTURED HOME CONSTRUCTION AND SAFETY STANDARDS

1. The authority citation for part 3280 continues to read as follows:

Authority: 42 U.S.C. 3535(d), 5403, and 5424.

2. In § 3280.4(b), add the following organizations to the list in alphabetical order to read as follows:

§ 3280.4 Incorporation by reference.

* * * * *

(b) * * *

NEMA—National Electrical Manufacturers Association, 1300 North 17th Street, Suite 1847, Rosslyn, VA 22209

NER—International Code Council Evaluation Service [Previously known as National Evaluation Service], 5360 Workman Mill Road, Whittier CA 90601–0543

* * * * *

NFRC—National Fenestration Rating Council, 8984 Georgia Avenue, Suite 320, Silver Spring, MD 20910

* * * * *

WDMA—Window and Door Manufacturers Association [Previously known as the National Wood Window and Door Association, NWWDA], 1400 East Touhy Avenue, Des Plaines, IL 60018

* * * * *

3. In § 3280.103, revise paragraph (b) to read as follows:

§ 3280.103 Light and ventilation.

* * * * *

(b) *Whole house ventilation.* Each manufactured home shall be provided with whole-house ventilation having a minimum capacity of 0.035 $ft^3/min/ft^2$ of interior floor space or its hourly average equivalent. This ventilation capacity shall be in addition to any openable window area. In no case shall the installed ventilation capacity of the system be less than 50 cfm nor more than 90 cfm. The following criteria shall be adhered to:

(1) The ventilation capacity shall be permitted to be provided by a mechanical system or a combination passive and mechanical system. The ventilation system or provisions for ventilation shall not create a positive pressure in Uo value Zone 2 and Zone 3 or a negative pressure condition in Uo value Zone 1 in excess of 0.03 inches of water.

(2) The ventilation system or provisions for ventilation shall exchange air directly with the exterior of the home, except it shall not draw or expel air with the space underneath the home. The ventilation system or provisions for ventilation shall not draw or expel air into the floor, wall, or ceiling/roof systems, even if those systems are vented. The ventilation system shall be designed to ensure that outside air is distributed to all bedrooms and main living areas. The combined use of undercut doors or transom grills connecting those areas to the room where the mechanical system is located shall be deemed acceptable.

(3) The ventilation system or a portion thereof shall be permitted to be integral with the home's heating or cooling system. The system shall be capable of operating independently of the heating or cooling modes. A ventilation system that is integral with the heating or cooling system shall be listed as part of the heating and cooling system or listed as suitable for use therewith.

(4) The ventilation system or portion thereof shall also be permitted to be one of the bathroom exhaust fans required by § 3280.103(c)(3) provided the following criteria are met:

(i) Maximum sone rating of 1.0; and

(ii) Designed for continuous operation and a minimum 10-year life.

(5) A mechanical ventilation system, or mechanical portion thereof, shall be provided with a manual control, and shall be permitted to be provided with automatic timers or humidistats.

(6) Occupant Education. Instructions for correctly operating and maintaining whole-house ventilation systems shall be included with the homeowner's manual. The instructions shall encourage occupants to operate these devices whenever the home is occupied, and refer to the whole-house ventilation labeled control. The whole-house ventilation label shall be permanent, shall state: ''WHOLE-HOUSE VENTILATION'' and shall be attached to the whole-house ventilation control.

* * * * *

4. In § 3280.202, revise the definition of ''Limited combustible'' and the definition of ''Noncombustible material'' to read as follows:

§ 3280.202 Definitions.

* * * * *

Limited combustible: A material meeting:

(1) The definition contained in Chapter 2 of NFPA 220–1995, Standard on Types of Building Construction; or

(2) 5/16 inch or thicker gypsum board.

Noncombustible material: A material meeting the definition contained in Chapter 2 of NFPA 220–1995, Standard on Types of Building Construction.

* * * * *

5. Revise the introductory paragraph of § 3280.203(a) to read as follows:

§ 3280.203 Flame spread limitations and fire protection requirements.

(a) *Establishment of flame spread rating.* The surface flame spread rating of interior-finish material shall not exceed the value shown in § 3280.203(b) when tested by ''Standard Method of Test of Surface Burning Characteristics of Building Materials, ASTM E–84, 2001 or NFPA 255, 1996,'' except that the surface flame spread rating of interior-finish materials required by § 3280.203(b)(5) and (6) may be determined by using the ''Standard Test Method for Surface Flammability of Materials Using a Radiant Heat Energy Source, ASTM E 162–94.'' However, the following materials need not be tested to establish their flame spread rating unless a lower rating is required by these standards:

* * * * *

6. Revise § 3280.206 to read as follows:

§ 3280.206 Fireblocking.

(a) *General.* Fireblocking shall comply with Section 206. The integrity of all fireblocking materials shall be maintained.

(b) *Fireblocking materials.* Fire blocking shall consist of the following materials:

(1) Minimum 1 inch nominal lumber, 5/16 inch thick gypsum board, or the equivalent; and

(2) Other Listed or Approved Materials;

(c) *Fireblocking locations.* (1) Fireblocking shall be installed in concealed spaces of stud walls, partitions, and furred spaces at the floor and ceiling levels. Concealed spaces shall not communicate between floor levels. Concealed spaces shall not communicate between a ceiling level and a concealed roof area, or an attic space.

(2) Fireblocking shall be installed at the interconnection of a concealed vertical space and a concealed horizontal space that occurs:

(i) Between a concealed wall cavity and the ceiling joists above; and

(ii) At soffits, drop ceilings, cover ceilings and similar locations.

(3) Fireblocking shall be installed around the openings for pipes, vents and other penetrations in walls, floors and ceilings of furnace and water heater spaces. Pipes, vents, and other penetrations that cannot be moved freely within their opening shall be considered fireblocked. Materials used to fireblock heat producing vent penetrations shall be noncombustible or limited combustible types.

7. In § 3280.207, revise paragraph (a)(4) introductory text to read as follows:

§ 3280.207 Requirements for foam plastic thermal insulating materials.

(a) * * *

(4) The foam plastic insulating material has been tested as required for its location in wall and/or ceiling cavities in accordance with testing procedures described in the Illinois Institute of Technology Research Institute (IITRI) Report, ''Development of Mobile Home Fire Test Methods to Judge the Fire-Safe Performance of Foam Plastic, J–6461, 1989'' or other full-scale fire tests accepted by HUD, and it is installed in a manner consistent with the way the material was installed in the foam plastic test

module. The materials shall be capable of meeting the following acceptance criteria required for their location.

* * * * *

8. In § 3280.303, paragraph (g) is revised to read as follows:

§ 3280.303 General requirements.

* * * * *

(g) *Alternative test procedures.* In the absence of recognized testing procedures either in these standards or in the applicable provisions of those standards incorporated by reference, the manufacturer electing this option shall develop or cause to be developed testing procedures to demonstrate the structural properties and significant characteristics of the material, assembly, subassembly component or member. Such testing procedures shall become part of the manufacturer's approved design (refer to § 3280.3). Such tests shall be witnessed by an independent licensed professional engineer or architect or by a recognized testing organization. Copies of the test results shall be kept on file by the manufactured home manufacturer.

9. In § 3280.304, revise paragraph (b) to read as follows:

§ 3280.304 Materials.

* * * * *

(b)(1) Standards for some of the generally used materials and methods of construction are listed in the following table.

Steel

Specification for Aluminum Structures Construction Manual Series—AA–30, Section 1, Fifth Edition—1986, Specifications and Guidelines for Aluminum Structures, Aluminum Design Manual, 1994.
Specification for Structural Steel Buildings—Allowable Stress Design and Plastic Design—AISC–S335, 1989.
Specification for the Design of Cold-Formed Steel Structural Members—AISI–SG 971–1996.
Design of Cold-Formed Stainless Steel Structural Members—ASCE 8, 1991.
Standard Specifications Load Tables and Weight Tables for Steel Joists and Joist Girders, SJI, 40th edition.
Structural Applications of Steel Cables for Buildings, ASCE 19, 1996.
Standard Specification for Strapping, Flat Steel and Seals—ASTM D3953, 1991.

Wood and Wood Products

Basic Hardboard—ANSI/AHA A135.4–1995.
Prefinished Hardboard Paneling—ANSI/AHA A135.5–1995.
Hardboard Siding—ANSI/AHA A135.6–1998.
American National Standard for Hardwood and Decorative Plywood—HPVA HP–1–1994.
Structural Design Guide for Hardwood Plywood Wall Panels—HPVA SG 96.
For wood products—Structural Glued Laminated Timber—ANSI/AITC A190.1–1992.
Voluntary Product Standard, Construction and Industrial Plywood—PS–1–99, V99, 1999.
APA Design/Construction Guide, Residential and Commercial—APA E30P–1996.
Design and Fabrication of All-Plywood Beams—APA–H 815E, Suppl. 5, 1995.
Plywood Design Specification—APA–Y 510S–1997.
Design and Fabrication of Glued Plywood-Lumber Beams—APA–S 812Q, Suppl. 2–1996.
Design and Fabrication of Plywood Curved Panels—APA–S 811N, Suppl. 1, 1995.
Design and Fabrication of Plywood Sandwich Panels—APA–U 814H, Suppl. 4, 1993.
Performance Standard for Wood-based Structural Use Panels— PS–2–96, 1996.
Design and Fabrication of Plywood Stressed-Skin Panels—APA–U 813L, Suppl. 3, 1996.
National Design Specifications for Wood Construction, 1997, AFPA.
Wood Structural Design Data, 1989, Revised 1992, AFPA.
Span Tables for Joists and Rafters—PS–20–70, 1993, AFPA.
Design Values for Joists and Rafters, American Softwood Lumber Standard Sizes, 1993, AFPA.
Mat-formed Wood Particleboard—ANSI A208.1–1999.
Voluntary Specifications for Aluminum, Vinyl (PVC) and Wood Windows and Glass Doors, AAMA/NWWDA 101/I.S.2, 1997.
Standard Test Methods for Puncture and Stiffness of Paperboard, and Corrugated and Solid Fiberboard—ASTM D781, 1973.
Standard Test Methods for Direct Moisture Content Measurement of Wood and Wood-Base Materials—ASTM D4442, 1999.
Standard Test Methods for Use and Calibration of Hand-Held Moisture Meters—ASTM D4444, 1992.

Other

Standard Specification for Gypsum Wallboard—ASTM C36, B–95.

Fasteners

Power Driven Staples, Nails, and Allied Fasteners for use in all Types of Building Construction—NER 272, 9/97.

Unclassified

Minimum Design Loads for Buildings and Other Structures—ASCE 7–1988.
Safety Performance Specifications and Methods of Test for Safety Glazing Materials Used in Building—ANSI Z97.1–1984.

* * * * *

10. In § 3280.305:

A. Add paragraph (c)(1)(ii)(C),

B. Add paragraphs (c)(3)(i)(A) through (C) following the table in paragraph (c)(3)(i);

C. Add paragraph (c)(3)(iv);

D. Revise paragraph (e);

E. Redesignate paragraphs (g)(3) through (g)(5) as paragraphs (g)(4) through (g)(6);

F. Add new paragraph (g)(3);

G. Redesignate paragraph (i)(l) as follows:

Old paragraph	New paragraph
(i)(1)	(j)
(i)(1)(i)	(j)(1)
(i)(1)(ii)	(j)(2)
(i)(1)(ii)(A)	(j)(2)(i)
(i)(1)(ii)(B)	(j)(2)(ii)

H. Reserve vacated paragraph (i)(1); and

I. Revise redesignated paragraph (j)(1) to read as follows:

§ 3280.305 Structural design requirements.

* * * * *

(c) * * *

(1) * * *

(ii) * * *

(C) One-piece metal roofing capable of resisting the design wind pressures in this Table for components and cladding (exterior roof coverings) is allowed to be used without structural sheathing provided it is tested using procedures that have been approved by HUD and meets all requirements of §§ 3280.303(c) and (g) and 3280.401.

* * * * *

(3) * * *

(i) * * *

(A) *North Roof Load Zone.* The following counties in each of the following states are deemed to be within the North Roof Load Zone:

Maine—Aroostook, Piscataquis, Somerset, Penobscot, Waldo, Knox, Hancock, Washington
Alaska—All Counties

(B) *Middle Roof Load Zone.* The following counties in each of the following states are deemed to be within the Middle Roof Load Zone:

BILLING CODE 4210–27–P

States	Counties			
South Dakota	Grant	Brookings	Hanson	Lincoln
	Codington	Miner	Minnehaha	Yankton
	Deuel	Lake	Hutchinson	Union
	Hamlin	Moody	Turner	Clay
	Kingsbury	McCook		
Minnesota	Koochiching	Stearns	Renville	Sibley
	Itasca	Swift	McLeod	Nicollet
	Hubbard	Kandiyohi	Carver	Blue Earth
	Cass	Meeker	Dakota	Martin
	Crow Wing	Wright	Goodhue	Watonwan
	Aitkin	Lac qui Parle	Wabasha	Brown
	St. Louis	Chippewa	Winona	Redwood
	Lake	Yellow Medicine	Fillmore	Lyon
	Cook	Mille Lacs	Mower	Lincoln
	Carlton	Kanabec	Olmsted	Pipestone
	Pine	Benton	Dodge	Murray
	Wadena	Isanti	Rice	Cottonwood
	Todd	Sherburne	Steele	Jackson
	Morrison	Anoka	Freeborn	Nobles
	Douglas	Chisapo	Faribault	Rock
	Grant	Washington	Waseca	St. Croix
	Stevens	Hennepin	Le Sueur	
	Pope	Ramsey	Scott	
Iowa	Hancock	Mitchell	Hamilton	Buena Vista
	Lyon	Howard	Webster	Cherokee
	Osceola	Chickasaw	Calhoun	Plymouth
	Dickinson	Butler	Sac	Sioux
	Emmet	Floyd	Ida	O'Brien
	Kossuth	Cerro Gordo	Humboldt	Clay
	Winnebago	Franklin	Pocahontas	Wright
	Worth	Hardin	Palo Alto	Crawford
Wisconsin	Douglas	Oconto	Pepin	Lincoln
	Bayfield	Menominee	Pierce	Oneida
	Ashland	Langlade	Dunn	Polk
	Iron	Marathon	Eau Claire	Burnett
	Vilas	Clark	Chippewa	Washburn
	Forest	Jackson	Rusk	Sawyer
	Florence	Trempealeau	Barron	Price
	Marinette	Buffalo	Taylor	Doon
Michigan	Houghton	Iron	Presque Isle	Wexford
	Baraga	Dickinson	Charlevoix	Benzie
	Marquette	Menominee	Montmorency	Grand Traverse
	Alger	Delta	Alpena	Kalkaska
	Luce	Schoolcraft	Alcona	Oscoda
	Chippewa	Mackinaw	Ogemaw	Otsego
	Keweenaw	Cheyboygan	Roscommon	Leelanau
	Ontonagon	Emmet	Missaukee	Antrim
	Gogebic			
New York	St. Lawrence	Herkimer	Onondaga	Genesee
	Franklin	Lewis	Madison	Orleans
	Clinton	Oswego	Cayuga	Niagara
	Essex	Jefferson	Seneca	Erie
	Hamilton	Oneida	Wayne	Wyoming
	Warren	Fulton	Ontario	Monroe
	Saratoga	Montgomery	Yates	
	Washington	Schenectady	Livingston	
Massachusetts	Essex			
Maine	Franklin	Kennebec	Lincoln	Cumberland
	Oxford	Androscoggin	Sagadahoc	York
Montana	All Counties			
Idaho	All Counties			
Colorado	All Counties			
Wyoming	All Counties			
Utah	All Counties			
Vermont	Franklin	Orleans	Caledonia	Addison
	Grand Isle	Essex	Washington	Rutland
	Lamoille	Chittendon	Orange	Windsor
New Hampshire	Coos	Belknap	Sullivan	Hillsborough
	Grafton	Strafford	Rockingham	Cheshire
	Carroll	Merrimack		

BILLING CODE 4210–27–C

(C) *South Roof Load Zone.* The states and counties that are not listed for the Middle Roof Load Zone in paragraph (c)(3)(i)(A) of this section, or the North Roof Load Zone in paragraph (c)(3)(i)(B) of this section are deemed to be within the South Roof Load Zone.

* * * * *

(iv) Skylights shall be required to withstand roof loads as specified in paragraphs (c)(3)(i) or (c)(3)(ii) of this section. Skylights shall be listed and tested in accordance with AAMA 1600/I.S.7–1999, Voluntary Specifications for Skylights.

* * * * *

(e) *Fastening of structural systems.*

(1) Roof framing shall be securely fastened to wall framing, walls to floor structure, and floor structure to chassis to secure and maintain continuity between the floor and chassis in order to resist wind overturning, uplift, and sliding and to provide continuous load paths for these forces to the foundation or anchorage system. The number and type of fasteners used shall be capable of transferring all forces between elements being joined.

(2) For Wind Zone II and Wind Zone III, roof framing members shall be securely fastened at the vertical bearing points to resist design overturning, uplift and sliding forces. When engineered connectors are not installed, roof framing members shall be secured at the vertical bearing points to wall framing members (studs) and wall framing members (studs) shall be secured to floor framing members with 0.016 inch base metal, minimum steel strapping or engineered connectors, or by a combination of with 0.016 inch base metal, minimum steel strapping or engineered connectors, and structural-rated wall sheathing that overlaps the roof and floor system. Steel strapping or engineered connectors shall be installed at a maximum spacing of 24 inch on center in Wind Zone II and 16 inch on center in Wind Zone III. Exception: Where substantiated by structural analysis, the 0.016 inch base metal minimum steel strapping or engineered connectors shall be permitted to be omitted when the structural rated sheathing that overlaps either the roof or floor system is capable of sustaining the applied loads.

* * * * *

(g) * * *

(3) Wood panel products used as floor or subfloor materials on the exterior of the home, such as in recessed entry ways, shall be rated for exterior exposure and shall be protected from moisture by sealing or applying nonabsorbent overlay with water resistant adhesive.

* * * * *

(j) *Welded connections.* (1) All welds shall be made in accordance with the applicable provisions of the Specification for Structural Steel Buildings, Allowable Stress Design and Plastic Design, AISC–S335, 1989, the Specification for the Design of Cold-Formed Steel Structural Members, AISI–SG–971, 1996, and the Stainless Steel Cold-Formed Structural Design Manual, ASCE 8, 1991.

* * * * *

11. In § 3280.306, revise paragraph (b) to read as follows:

§ 3280.306 Windstorm protection.

* * * * *

(b) *Contents of instructions.* The manufacturer shall provide printed instructions with each manufactured home that specify the location and required capacity of stabilizing devices on which the design is based. In addition to the printed instructions, each column support pier location required along the marriage line(s) of multisection manufactured homes shall be identified by paint, label, decal, stencil, or other acceptable method at each pier location. Such location identifications shall be visible after the home is installed. The manufacturer shall provide drawings and specifications, certified by a registered professional engineer or architect, that indicate at least one acceptable system of anchoring, including the details or required straps or cables, their end connections, and all other devices needed to transfer the wind loads from the manufactured home to an anchoring or foundation system.

* * * * *

12. In § 3280.401, revise paragraphs (a) and (b) to read as follows:

§ 3280.401 Structural load tests.

* * * * *

(a) *Proof load tests.* Every structural assembly tested shall be capable of sustaining its dead load plus superimposed live loads equal to 1.75 times the required live loads for a period of 12 hours without failure. Tests shall be conducted with loads applied and deflections recorded in ¼ design live load increments at 10-minute intervals until 1.25 times design live load plus dead load has been reached. Additional load shall then be applied continuously until 1.75 times design live load plus dead load has been reached. Assembly failure shall be considered as design live load deflection (or residual deflection measured 12 hours after live load removal) that is greater than the limits set in § 3280.305(d), rupture, fracture, or excessive yielding. Design live load deflection criteria shall not apply when the structural assembly being evaluated does not include structural framing members. An assembly to be tested shall be of the minimum quality of materials and workmanship of the production. Each test assembly, component, or subassembly shall be identified as to type and quality or grade of material. All assemblies, components, or subassemblies qualifying under this test shall be subject to a continuing qualification testing program acceptable to HUD.

(b) *Ultimate load tests.* Ultimate load tests shall be performed on a minimum of three assemblies or components to generally evaluate the structural design. Every structural assembly or component tested shall be capable of sustaining its total dead load plus the design live load increased by a factor of safety of at least 2.5. A factor of safety greater than 2.5 shall be used when required by an applicable reference standard in § 3280.304(b)(1). Tests shall be conducted with loads applied and deflections recorded in ¼ design live load increments at 10-minute intervals until 1.25 times design live load plus dead load has been reached. Additional loading shall then be applied continuously until failure occurs, or the total of the factor of safety times the design live load plus the dead load is reached. Assembly failure shall be considered as design live load deflection greater than the limits set in § 3280.305(d), rupture, fracture, or excessive yielding. Design live load deflection criteria shall not apply when the structural assembly being evaluated does not include structural framing members. Assemblies to be tested shall be representative of average quality or materials and workmanship of the production. Each test assembly, component, or subassembly shall be identified as to type and quality or grade of material. All assemblies, components, or subassemblies qualifying under this test shall be subject to a periodic qualification testing program acceptable to HUD.

13. Revise § 3280.402 to read as follows:

§ 3280.402 Test procedure for roof trusses.

(a) *Roof load tests.* The following is the roof truss test procedure for vertical loading condition. Where roof trusses act as support for other members, have eave or cornice projections, or support

concentrated loads, roof trusses shall be tested for those conditions.

(b) *General.* Trusses shall be permitted to be tested in a truss test fixture that replicates the design loads, and actual support points, and does not restrain horizontal movement. When tested singly or in groups of two or more trusses, trusses shall be mounted on supports and positioned as intended to be installed in the manufactured home to give the required clear span distance (L) and eave or cornice distance (Lo), if applicable, as specified in the design. Truss tests shall be performed on a minimum of three trusses to evaluate the design.

(1) When trusses are tested singly, trusses shall be positioned in a test fixture with supports properly located and have the roof loads evenly applied. See Figure 3280.402(b)(1).

Figure 3280.402(b)(1) – Test fixture for testing trusses singly.

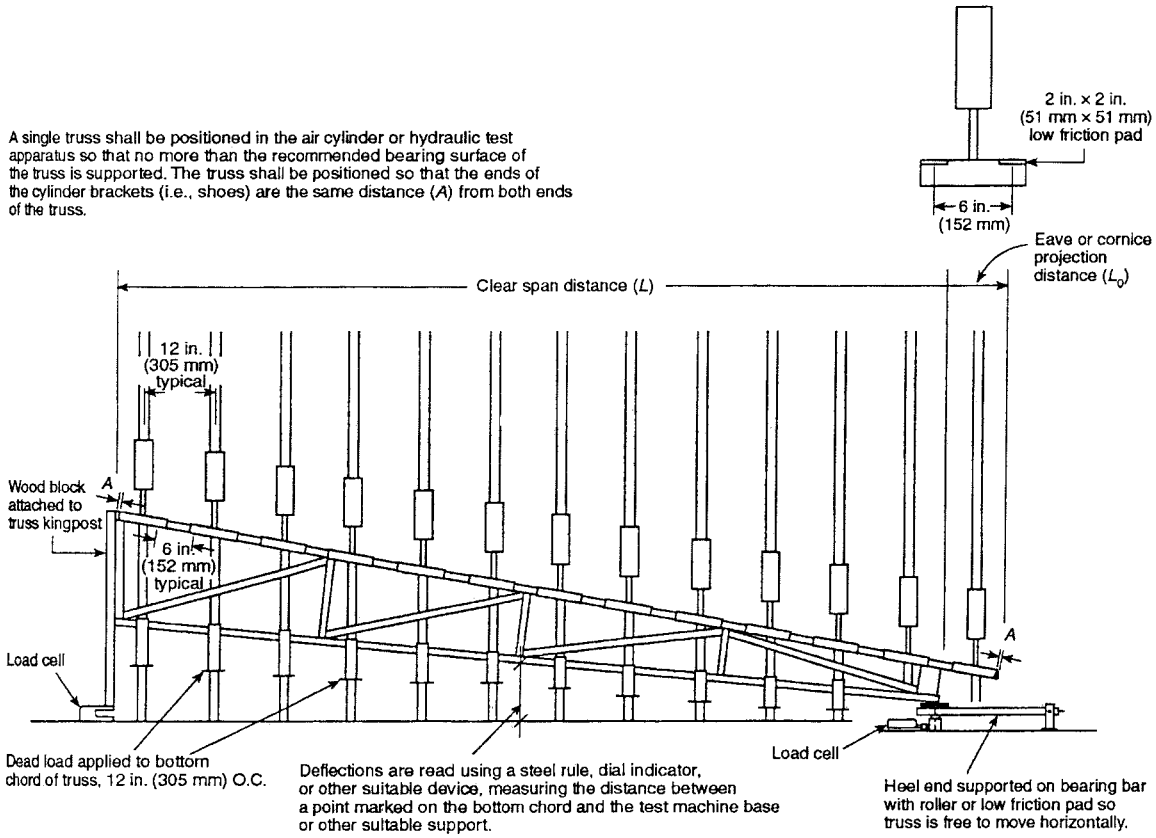

(2) When tested in groups of two or more, the top chords shall be permitted to be sheathed with nominal ¼ inch x 12 inch plywood strips. The plywood strips shall be at least long enough to cover the top chords of the trusses at the designated design truss spacing. Adjacent plywood strips shall be separated by at least ⅛ inch. The plywood strips shall be nailed with 4d nails or equivalent staples no closer than 8 inch (203 mm) on center along the top chord. The bottom chords of the adjacent trusses shall be permitted to be one of the following: (1) Unbraced; (2) Laterally braced together (not cross-braced) with 1 inch x 2 inch stripping no closer than 24 inch on center, nailed with only one 6d nail at each truss. See Figure 3280.402(b)(2).

Figure 3280.402(b)(2) – Test setup for roof trusses tested in groups of two or more.

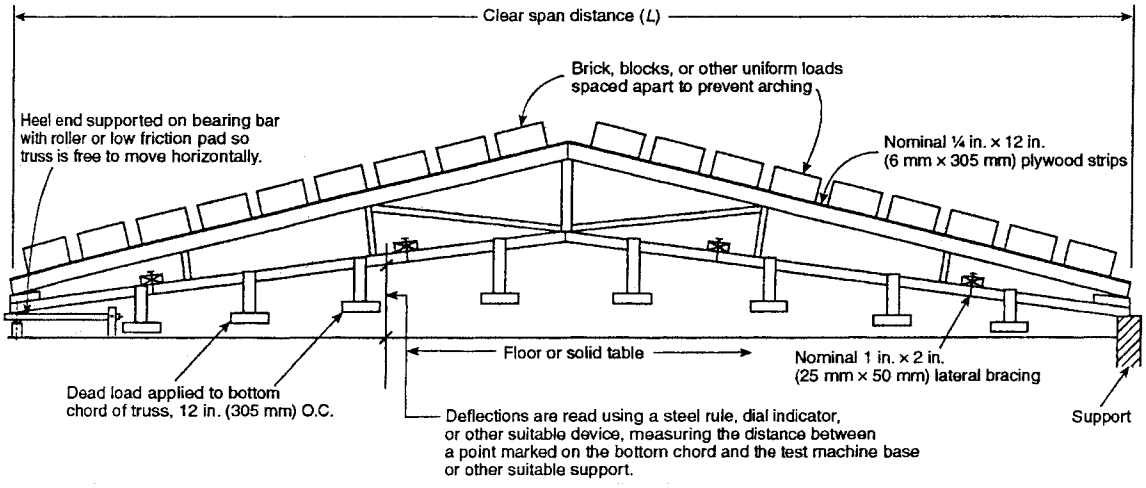

(c) *Measuring and loading methods.* Deflections of each truss shall be measured relative to a fixed reference datum. Deflections shall be measured at the free end of an eave or cornice projection and at as many bottom chord panel points as necessary to obtain an accurate representation of the deflected truss or trusses but shall be measured at least at the truss midspan, at each panel point, and at midspan between each panel point. Deflections shall be read and recorded to the nearest 1/32 inch. Dead load shall be applied to the top and bottom chord and live load applied to the top chord through a suitable hydraulic, pneumatic, or mechanical system or weights to simulate design loads. Load unit weights for uniformly distributed top chord loads shall be separated so that arch action does not occur and spaced not more than 12 inch on center so as to simulate uniform loading. Bottom chord loading shall be spaced as uniformly as practical. Truss gravity loads shall be calculated based on the overall truss length (horizontal projection) including eave or cornice projections.

(d) *General test procedures.* General test procedures include the following methods:

(1) *Dead load.* Measure and record initial elevation of the truss or trusses in the test position at no load. Apply dead loads to the top and bottom chord of the truss that are representative of the weights of materials to be supported by the truss. The actual ceiling/roof assembly dead loads shall be used with a minimum of 4 psf on the top chord and 2 psf on the bottom chord. Greater dead loads shall be applied to the top and bottom chords if required, to represent the actual loads. Dead loads to be applied to the truss test assembly shall be permitted to include only the weights of materials supported by the truss and not the weight of the truss itself. However, readings from load cells (when used) on which the test truss rests shall reflect the sum of the applied load plus the weight of the truss. Apply dead loads and hold for five minutes. Measure and record the deflections.

(2) *Live Load.* Maintaining the dead loads, apply live load to the top chord in approximate ¼ live load increments until dead load plus 1.25 times the live load is reached. Measure and record the deflections at a minimum of one minute after each live load increment has been applied and five minutes after full live load has been reached. Apply incremental loads at a uniform rate such that approximately one-half hour is required to reach full design live load.

(3) *Recovery phase.* Remove the total live load (1.25 times the roof live load). Measure and record the deflections five minutes after the total live load has been removed.

(4) *Overload phase.* Additional loading shall then be applied continuously until the dead load plus 2.5 times the design live load is reached. This overload condition shall be maintained for five minutes.

(5) *Acceptance criteria.* The truss design shall be considered to have passed if all of the following conditions are met:

(i) No load to dead load deflection shall be less than L/480 for simply supported clear spans and less than Lo/180 for eave and cornice projections; and

(ii) Dead load to design live load deflections shall be less than L/180 for simply supported clear spans and less than Lo/90 for eave and cornice projections; and

(iii) The truss shall recover to at least L/480 for simply supported clear spans and Lo/180 for eave and cornice projections within five minutes after the total live load has been removed; and

(iv) The truss shall maintain the overload condition for five minutes without rupture or fracture.

(e) *Uplift loads.* This test shall only be required for truss designs that may be critical under uplift load conditions.

(1)(i) Place the truss in the test fixture and position it as intended to be installed in the manufactured home. See Figure 3280.402(e)(1).

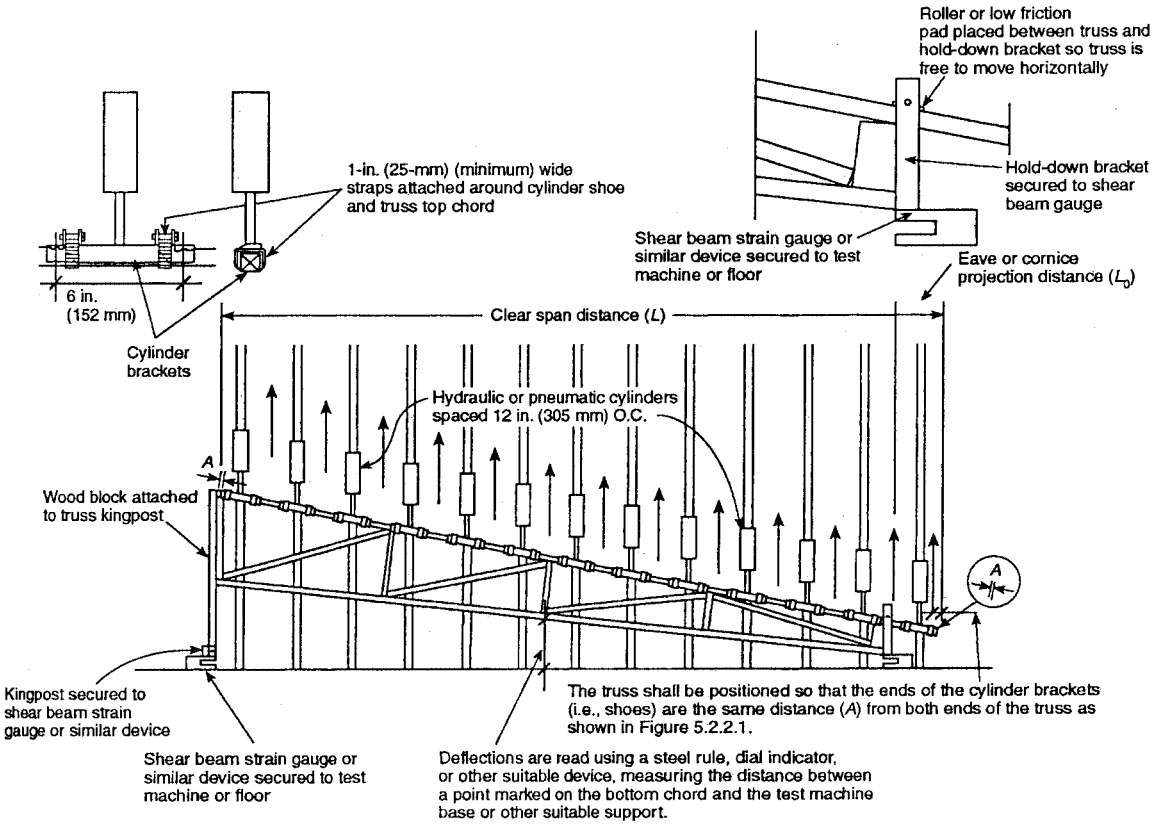

(ii) Position the load measurement devices to register the wind uplift loads that will be applied to the top chord of the truss. The uplift loads shall be applied through tension devices not wider than 1 inch and spaced not greater than 6 inches on center so as to simulate uniform loading. Gravity and wind uplift load tests may be performed on the same truss in this single set-up mode. Measure and record initial elevation of the bottom chord of the truss in the test position at the midspan of the truss, at each panel point, and midspan between each panel point as well as at the end of the eave or cornice projections greater than 12 inches. Eave or cornice projection loads are applied separately for eaves or cornice projections greater than 12 inches. For eave or cornice projections greater than 12 inches (305 mm), the additional required load shall be applied to the eave simultaneously with the main body load. For eave or cornice projections 12 inches or less, add the additional required load to the main body load and apply it to the entire top chord.

(2) Apply the uplift load to the top chord of the truss. For Wind Zone I, the net uplift load for the clear span of the truss is 9 psf and 22.5 psf for the eave or cornice projections of the truss. For Wind Zones II and III, the net uplift load for the clear span and eave or cornice projections shall be determined by subtracting the minimum dead load from the uplift load provided in the Table of Design Wind Pressure in § 3280.305(c)(1)(ii)(B). Measure and record the deflection 5 minutes after the net uplift load has been applied. Design load deflection shall be less than L/180 for simply supported clear span and less than Lo/90 for eave or cornice projections.

(3) Continue to load the truss to 2.5 times the net uplift load. Maintain the full load for 1 minute and inspect the truss for rupture or fracture.

(4) The uplift load tests shall be performed on a minimum of three single trusses to evaluate the truss design.

(f) *Follow up testing.* Follow up testing procedures shall include the following:

(1) Production trusses qualifying under these test procedures shall be subject to a continuing witnessed independent third party or an approved testing program as specified in § 3280.402(f)(3). Manufacturers of listed or labeled trusses shall follow an in-house quality control program approved by an independent third party as specified in § 3280.402(g). Home manufacturers producing trusses which are not listed or labeled, for their own use, shall be subject to a follow-up testing program as specified in § 3280.402(f)(3) and a truss certification program as specified in § 3280.402(g).

(2) Truss designs that are qualified but not in production are not subject to follow-up testing until produced. When the truss design is brought into production a follow up test is to be performed if the truss design has been out of production for more than six months.

(3) The frequency of truss manufacturer's quality control follow-up testing for trusses shall be one test in 4000 trusses or once every 6 months, whichever is more frequent, for every truss design produced.

(g) *Truss certification program.* The truss certification program shall include, at a minimum, procedures for quality of materials, workmanship and manufacturing tolerances, description and calibration of test equipment, truss retesting criteria, and procedures in case of non-complying results.

14. In § 3280.403, revise paragraph (b), paragraph (d)(2), and paragraph (e) to read as follows:

§ 3280.403 Standard for windows and sliding glass doors used in manufactured homes.

* * * * *

(b) *Standard.* All primary windows and sliding glass doors shall comply with AAMA Standard 1701.2–1995, Primary Window and Sliding Glass Door: Voluntary Standard for Utilization in Manufactured Housing, except the

exterior and interior pressure tests shall be conducted at the design wind loads required for components and cladding specified in § 3280.305(c)(1).

* * * * *

(d) * * *

(2) Sealed insulating glass, where used, shall meet all performance requirements for Class C in accordance with ASTM E–774–97, Standard Specification for Sealed Insulating Glass Units. The sealing system shall be qualified in accordance with ASTM E–773–97 Standard Test Methods for Seal Durability of Sealed Insulating Glass Units. Each glass unit shall be permanently identified with the name of the insulating glass manufacturer.

(e) *Certification.* All primary windows and sliding glass doors to be installed in manufactured homes shall be certified as complying with AAMA Standard 1701.2–1995. This certification must be based on tests conducted at the design wind loads specified in § 3280.305(c)(1).

(1) All such windows and doors shall show evidence of certification by affixing a quality certification label to the product in accordance with ANSI Z34.1–1993, ''For Certification–Third-Party Certification Program.''

(2) In determining certifiability of the products, an independent quality assurance agency shall conduct preproduction specimen tests in accordance with AAMA 1701.2–1995. Further, such agency shall inspect the product manufacturer's facility at least twice per year.

* * * * *

15. In § 3280.404, revise paragraph (b) to read as follows:

§ 3280.404 Standard for egress windows and devices for use in manufactured homes.

* * * * *

(b) *Performance.* Egress windows including auxiliary frame and seals, if any, shall meet all requirements of AAMA Standard 1701.2–1995, Primary Window and Sliding Glass Door Voluntary Standard for Utilization in Manufactured Housing and AAMA Standard 1704–1985, Voluntary Standard Egress Window Systems for Utilization in Manufactured—Housing, except the exterior and interior pressure tests for components and cladding shall be conducted at the design wind loads required by § 3280.305(c)(1).

* * * * *

16. In § 3280.405, revise paragraphs (b) and (e) to read as follows:

§ 3280.405 Standard for swinging exterior passage doors for use in manufactured homes.

* * * * *

(b) *Performance requirements.* The design and construction of exterior door units shall meet all requirements of AAMA 1702.2–1995, Swinging Exterior Passage Doors Voluntary Standard for Utilization in Manufactured Housing.

* * * * *

(e) *Certification.* All swinging exterior doors to be installed in manufactured homes shall be certified as complying with AAMA 1702.2–1995, Swinging Exterior Passage Doors Voluntary Standard for Utilization in Manufactured Housing.

(1) All such doors shall show evidence of certification by affixing a quality certification label to the product in accordance with ANSI Z34.1–1993, For Certification–Third Party Certification Program.

(2) In determining certifiability of the products, an independent quality assurance agency shall conduct preproduction specimen test in accordance with AAMA 1702.2–1995, Swinging Exterior Passage Doors Voluntary Standard for Utilization in Manufactured Housing.

* * * * *

17. In § 3280.406, revise the introductory text in paragraph (b) to read as follows:

§ 3280.406 Air chamber test method for certification and qualification of formaldehyde emission levels.

* * * * *

(b) *Testing.* Testing shall be conducted in accordance with the Standard Test Method for Determining Formaldehyde Levels from Wood Products Under Defined Test Conditions Using a Large Chamber, ASTM E–1333–96, with the following exceptions:

* * * * *

18. In § 3280.504, revise paragraph (a)(1) and paragraph (b) to read as follows:

§ 3280.504 Condensation control and installation of vapor retarders.

(a) *Ceiling vapor retarders.* (1) In Uo Value Zones 2 and 3, ceilings shall have a vapor retarder with a permeance of not greater than 1 perm (as measured by ASTM E–96–95 Standard Test Methods for Water Vapor Transmission of Materials) installed on the living space side of the roof cavity.

* * * * *

(b) *Exterior walls.* (1) Exterior walls shall have a vapor barrier no greater than 1 perm (dry cup method) installed on the living space side of the wall; or

(2) Unventilated wall cavities shall have an external covering and/or sheathing that forms the pressure envelope. The covering and/or sheathing shall have a combined permeance of not less than 5.0 perms. In the absence of test data, combined permeance shall be permitted to be computed using the following formula: P total = (1/[(1/P1) + (1/P2)]), where P1 and P2 are the permeance values of the exterior covering and sheathing in perms. Formed exterior siding applied in sections with joints not caulked or sealed, shall not be considered to restrict water vapor transmission; or

(3) Wall cavities shall be constructed so that ventilation is provided to dissipate any condensation occurring in these cavities; or

(4) Homes manufactured to be sited in ''humid climates'' or ''fringe climates'' as shown on the Humid and Fringe Climate Map in this paragraph shall be permitted to have a vapor retarder specified in paragraph (b)(1) of this section installed on the exterior side of the wall insulation or be constructed with an external covering and sheathing with a combined permeance of not greater than 1.0 perm, provided the interior finish and interior wall panel materials have a combined permeance of not less than 5.0 perm.

Humid and Fringe Climate Map

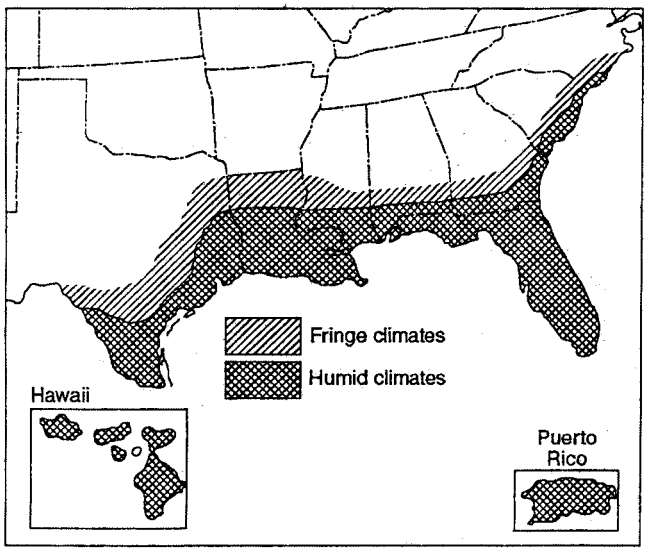

(5) The following areas of local governments (counties or similar areas, unless otherwise specified), listed by State are deemed to be within the humid and fringe climate areas shown on the Humid and Fringe Climate Map in paragraph (b)(4) of this section, and the vapor retarder specified in paragraph (b)(4) of this section may be applied to homes built to be sited within these jurisdictions:

Alabama

Baldwin, Barbour, Bullock, Bulter, Chootaw, Clarke, Cofee, Conecuh, Covington, Crenshaw, Dale, Escambia, Geneva, Henry, Houston, Lowndes, Marengo, Mobile, Monroe, Montgomery, Pike, Washington, Wilcox.

Florida

All counties and locations within the State of Florida.

Georgia

Appling, Atkinson, Bacon, Baker, Ben Hill, Berrien, Brantley, Brooks, Bryan, Calhoun, Camden, Charlton, Chatham, Clay, Clinch, Coffee, Colquitt, Cook, Crisp, Decatur, Dougherty, Early, Echols, Effingham, Evans, Glynn, Wayne, Grady, Irwin, Jeff Davis, Lanier, Lee, Liberty, Long, Lowndes, McIntosh, Miller, Mitchell, Pierce, Quitman, Randolph, Seminole, Tattnall, Terrell, Thomas, Tift, Turner, Ware, Worth.

Louisiana

All counties and locations within the State of Louisiana.

Mississippi

Adams, Amite, Clairbourne, Clarke, Copiah, Covington, Forrest, Franklin, George, Greene, Hancock, Harrison, Hinds, Issaquena, Jackson, Jasper, Jefferson, Jefferson Davis, Jones, Lamar, Lawrence, Lincoln, Pearl River, Perry, Pike, Rankin, Simpson, Smith, Stone, Walthall, Warren, Wayne, Wilkinson.

North Carolina

Brunswick, Carteret, Columbus, New Hanover, Onslow, Pender.

South Carolina

Jasper, Beaufort, Colleton, Dorchester, Charleston, Berkeley, Georgetown, Horry.

Texas

Anderson, Angelina, Aransas, Atacosa, Austin, Bastrop, Bee, Bexar, Brazoria, Brazos, Brooks, Burleson, Caldwell, Calhoun, Cameron, Camp, Cass, Chambers, Cherokee, Colorado, Comal, De Witt, Dimmit, Duval, Falls, Fayette, Fort Bend, Franklin, Freestone, Frio, Gavelston, Goliad, Gonzales, Gregg, Grimes, Guadalupe, Hardin, Harris, Harrison, Hays, Henderson, Hidalgo, Hopkins, Houston, Jackson, Jasper, Jefferson, Jim Hogg, Jim Wells, Karnes, Kaufman, Kennedy, Kinney, Kleberg, La Salle, Lavaca, Lee, Leon, Liberty, Limestone, Live Oak, Madison, Marion, Matagorda, Maverick, McMullen, Medina, Milam, Montgomery, Morris, Nacogdoches, Navarro, Newton, Nueces, Orange, Panola, Polk, Rains, Refugion, Robertson, Rusk, Sabine, San Augustine, San Jacinto, San Patricio, Shelby, Smith, Starr, Titus, Travis, Trinity, Tyler, Upshur, Uvalde, Val Verde, Van Zandt, Victoria, Walker, Waller, Washington, Webb, Wharton, Willacy, Williamson, Wilson, Wood, Zapata, Zavala.

* * * * *

19. In § 3280.508, revise paragraphs (a), (b), and (e) to read as follows:

§ 3280.508 Heat loss, heat gain and cooling load calculations.

(a) Information, values and data necessary for heat loss and heat gain determinations shall be taken from the 1997 ASHRAE Handbook of Fundamentals, chapters 22 through 27. The following portions of those chapters are not applicable:

21.1 Steel Frame Construction
21.2 Masonry Construction
21.3 Floor Systems
21.14 Pipes
21.16 Tanks, Vessels and Equipment
21.17 Refrigerated Rooms and Buildings
22.15 Mechanical and Industrial Systems
23.13 Commercial Building Envelope Leakage
25.4 Calculation of Heat Loss from Crawl Spaces

(b) The calculation of the manufactured home's transmission heat loss coefficient (Uo) shall be in accordance with the fundamental principals of the 1997 ASHRAE Handbook of Fundamentals and, at a minimum, shall address all the heat loss or heat gain considerations in a manner consistent with the calculation procedures provided in the document, Overall U-values and Heating/Cooling Loads–Manufactured Homes—February 1992–PNL 8006, HUD User No. 0005945.

* * * * *

(e) U values for any glazing (*e.g.*, windows, skylights, and the glazed portions of any door) shall be based on tests using [add edition date] AAMA 1503.1–1988, Voluntary Test Method for Thermal Transmittance and Condensation Resistance of Windows, Doors, and Glazed Wall Sections or the National Fenestration Rating Council 100 (1997 edition), Procedure for Determining Fenestration Product Thermal Properties. In the absence of tests, manufacturers shall use the residential window U values contained in Chapter 29, Table 5 of the 1997

ASHRAE Handbook of Fundamentals. In the event that the classification of the window type is indeterminate, the manufacturer shall use the classification that gives the higher U value. Where a composite of materials from two different product types are used, the product shall be assigned the higher U value. For the purpose of calculating U o values, storm windows shall be treated as an additional pane.

* * * * *

20. In § 3280.510, add paragraph (d) to read as follows:

§ 3280.510 Heat loss certificate.

* * * * *

(d) The following additional statement shall be provided on the heating certificate and data plate required by § 3280.5 when the home is built with a vapor retarder of not greater than 1 perm (dry cup method) on the exterior side of the insulation: ''This home is designed and constructed to be sited only in humid or fringe climate regions as shown on the Humid and Fringe Climate Map.'' A reproduction of the following Humid and Fringe Climate Map is to be provided on the heating certificate and data plate. The map shall be not less than 3½ inch x 2¼ inch in size and may be combined with the Uo Value Zone Map for Manufactured Housing in § 3280.506.

21. In § 3280.604, revise paragraph (b)(2) and the table following paragraph (b)(2) to read as follows:

§ 3280.604 Materials.

* * * * *

(b) * * *

(2) When a plastic material or component is not covered by the Standards in the following table, it shall be certified as non-toxic in accordance with NSF 61–1997, Drinking Water System Components—Health Effects.

Ferrous Pipe and Fittings

Gray Iron Threaded Fittings—ANSI/ASME B16.4–1992.
Malleable Iron Threaded Fittings—ANSI/ASME B16.3–1992.
Material and Property Standard for Special Cast Iron Fittings—IAPMO PS 5–84.
Welding and Seamless Wrought Steel Pipe—ANSI/ASME B36.10–1979.
Standard Specification for Pipe, Steel, Black and Hot-Dipped, Zinc-Coated, Welded and Seamless—ASTM A53–93.
Pipe Threads, General Purpose (Inch)—ANSI/ASME B1.20.1–1983.
Standard Specification for Cast Iron Soil Pipe and Fittings—ASTM A74–92.
Standard Specification for Hubless Cast Iron Soil Pipe and Fittings for Sanitary and Storm Drain, Waste, and Vent Piping Applications—CISPI–301–90.

Nonferrous Pipe and Fittings

Standard Specification for Seamless Copper Pipe, Standard Sizes—ASTM B42–93.
Standard Specification for General Requirements for Wrought Seamless Copper and Copper-Alloy Tube—ASTM B251–93.
Standard Specification for Seamless Copper Water Tube—ASTM B 88–93.
Standard Specification for Copper Drainage Tube (DWV)—ASTM B306–92.
Wrought Copper and Copper Alloy Solder-Joint Pressure Fitting—ASME/ANSI B16.22–1989.
Wrought Copper and Wrought Copper Alloy Solder-Joint Drainage Fittings–DWV—ASME/ANSI B16.29–1986.
Cast Copper Alloy Solder-Joint Pressure Fittings—ANSI B16.18–1984.
Cast Copper Alloy Solder-Joint Drainage Fittings–DWV—ASME B16.23–1992.
Cast Copper Alloy Fittings for Flared Copper Tubes—ASME/ANSI B16.26–1988.
Standard Specification for Seamless Red Brass Pipe, Standard Sizes—ASTM B43–91.
Cast Bronze Threaded Fittings, Classes 125 and 250—ANSI/ASME B16.15–1985.

Plastic Pipe and Fittings

Standard Specification Acrylonitrile-Butadiene-Styrene (ABS) Schedule 40 Plastic Drain, Waste, and Vent Pipe and Fittings—ASTM D2661–91.
Standard Specification for Poly (Vinyl Chloride) (PVC) Plastic Drain, Waste, and Vent Pipe and Fittings—ASTM D2665–91b.
Standard Specification for Drain, Waste, and Vent (DWV) Plastic Fittings Patterns—ASTM D3311–92.
Standard Specification for Acrylonitrile-Butadiene-Styrene (ABS) Schedule 40, Plastic Drain, Waste, and Vent Pipe With a Cellular Core—ASTM F628–91.
Standard Specification for Chlorinated Poly (Vinyl Chloride) (CPVC) Plastic Hot- and Cold-Water Distribution Systems—ASTM D2846–92.
Standard Specification for Polybutylene (PB) Plastic Hot- and Cold-Water Distribution Systems—ASTM D3309–92a.
Plastic Piping Components and Related Materials—ANSI/NSF 14–1990.

Miscellaneous

Standard Specification for Rubber Gaskets for Cast Iron Soil Pipe and Fittings—ASTM C564–88.
Backflow Valves—ANSI A112.14.1–1975.
Plumbing Fixture Setting Compound—TTP 1536A–1975.
Material and Property Standard for Cast Brass and Tubing P-Traps—IAPMO PS 2–89.
Relief Valves and Automatic Gas Shutoff Devices for Hot Water Supply Systems—*ANSI Z21.22–1986, With Addendum Z21.22a-1990.
Standard Specification for Solvent Cement for Acrylonitrile-Butadiene-Styrene (ABS) Plastic Pipe and Fittings—ASTM D2235–88.
Standard Specification for Solvent Cements for Poly (Vinyl Chloride) (PVC) Plastic Piping Systems—ASTM D2564–91a.
Specification for Neoprene Rubber Gaskets for HUB and Spigot Cast Iron Soil Pipe and Fittings—CISPI-HSN–85.
Plumbing System Components for Manufactured Homes and Recreational Vehicles—ANSI/NSF 24–1988.
Material and Property Standard for Diversion Tees and Twin Waste Elbow—IAPMO PS 9–84.
Material and Property Standard for Flexible Metallic Water Connectors—IAPMO PS 14–89.
Material and Property Standard for Dishwasher Drain Airgaps—IAPMO PS 23–89.
Material and Property Standards for Backflow Prevention Assemblies—IAPMO PS 31–91.
Performance Requirements for Air Admittance Valves for Plumbing Drainage Systems, Fixture and Branch Devices—ANSI/ASSE 1051–98.
Drinking Water System Components—Health Effects—NSF 61–1997.

Plumbing Fixtures

Plumbing Fixtures (General Specifications)—FS WW–P–541E/GEN–1980.
Vitreous China Plumbing Fixtures—ANSI/ASME A112.19.2(M)–1990.
Enameled Cast Iron Plumbing Fixtures—ANSI/ASME A112.19.1M–1987.
Porcelain Enameled Formed Steel Plumbing Fixtures—ANSI/ASME A112.19.4(M)–1984.
Plastic Bathtub Units With Addenda Z124.1a-1990 and Z124.16–1991—ANSI Z124.1–1987.
Standard for Porcelain Enameled Formed Steel Plumbing Fixtures—IAPMO TSC 22–85.
Plastic Shower Receptors and Shower Stalls With Addendum Z124.2a-1990—ANSI Z124.2–1987.
Stainless Steel Plumbing Fixtures (Designed for Residential Use)—ANSI/ASME A112.19.3M–1987.
Material and Property Standard for Drains for Prefabricated and Precast Showers—IAPMO PS 4–90.
Plastic Lavatories with addendum Z124.3a-1990—ANSI Z124.3–1986.
Safety Performance Specifications and Methods of Test for Safety Glazing Materials Used in Building—ANSI Z97.1–1984.
Water Heater Relief Valve Drain Tubes—ASME/ANSI A112.4.1–1993.
Flexible Water Connectors—ASME/ANSI A112.18.6–1999.
Performance Requirements for Backflow Protection Devices and Systems in Plumbing Fixture Fittings—ASME/ANSI A112.18.3–1996.
Non-Vitreous Ceramic Plumbing Fixtures—ASME/ANSI A112.19.9M–1998.
Dual Flush Devices for Water Closets—ASME/ANSI A119.19.10–1994
Deck Mounted Bath/Shower Transfer Valves with Integral BackFlow Protection—ASME/ANSI A112.18.7–1999.
Plastic Fittings for Connecting Water Closets to the Sanitary Drainage System—ASME/ANSI A112.4.3–1999.
Hydraulic Requirements for Water Closets and Urinals, A112.19.6–1995

Plumbing Fixture Fittings—ASME/ANSI A112.18.1M–1996.
Trim for Water Closet, Bowls, Tanks, and Urinals—ANSI A112.19.5–1979.
Plastic Water Closets, Bowls and Tanks with Addenda Z124.4a-1990—ANSI Z124.4–1986.
ANSI Z124.5, Plastic Toilet (Water Closet) Seats (1997).
ANSI Z124.7, Prefabricated Plastic Spa Shells (1997).
ANSI Z124.8, Plastic Bathtub Liners (1990).
ANSI Z124.9, Plastic Urinal Fixtures (1994).
Whirlpool Bathtub Appliances—ASME/ANSI A112.19.7M–1987.
Performance Requirements for Individual Thermostatic Pressure Balancing and Combination Control for Bathing Facilities—ASSE 1016–1988, (ANSI 1990).
Performance Requirements for Pressurized Flushing Devices (Flushometers) For Plumbing Fixtures—ASSE 1037–1990 (ANSI–1990).
Performance Requirements for Water Closet Flush Tank Fill Valves (Ballcocks)—ASSE 1002 Revision 5–1986, (ANSI/ASSE–1979).
Performance Requirements for Hand-held Showers—ASSE 1014–1989 (ANSI–1990).
Hydrants for Utility and Maintenance Use—ANSI/ASME A112.21.3M–1985.
Performance Requirements for Home Laundry Equipment—ASSE 1007–1986.
Performance Requirements for Hot Water Dispensers, Household Storage Type Electrical—ASSE 1023–ANSI/ASSE–1979.
Plumbing Requirements for Residential Use (Household) Dishwashers—ASSE 1006, ASSE/ANSI–1986.
Performance Requirements for Household Food Waste Disposer Units—ASSE 1008–1986.
Performance Requirements for Temperature Activated Mixing Valves for Primary Domestic Use—ASSE 1017–1986.
Water Hammer Arresters—ANSI A112.26.1–1969 (R 1975).
Suction Fittings for Use in Swimming Pools, Wading Pools, Spas, Hot Tubs and Whirlpool Bathtub Appliances—ASME/ANSI A112.19.8M–1989.
Air Gaps in Plumbing Systems—ASME A112.1.2–1991.
Performance Requirements for Diverters for Plumbing Faucets with Hose Spray, Anti-Siphon Type, Residential Applications—ASSE 1025–ANSI/ASSE–1978.
Performance Requirements for Pipe Applied Atmospheric Type Vacuum Breakers—ASSE 1001 ASSE/ASNI–1990.
Performance Requirements for Hose Connection Vacuum Breakers—ASSE 1011–1981 (ANSI–1982).
Performance Requirements for Wall Hydrants, Frost Proof Automatic Draining, Anti-Backflow Types—ANSI/ASSE 1019–1978.

21. In § 3280.607, add new paragraph (a)(6), redesignate paragraphs (b)(2)(iii) through (v) as paragraphs (b)(2)(iv) through (vi), respectively, add new paragraph (b)(2)(iii), and revise paragraph (c)(6)(iv) to read as follows:

§ 3280.607 Plumbing fixtures.

(a) * * *

(6) *Water conservation.* All lavatory faucets, showerheads, and sink faucets shall not exceed a flow of 2.5 gallons per minute (gpm).

(b) * * *

(2) * * *

(iii) All water closets shall be low consumption (1.6 gallons per flush (gpf)) closets.

* * * * *

(c) * * *

(6) * * *

(iv) *Electrical.* Refer to the National Electrical Code NFPA 70–1996, Section 680G.

22. In § 3280.703, revise the table following the introductory text to read as follows:

§ 3280.703 Minimum standards.

* * * * *

Appliances

Standard for Safety, Heating and Cooling Equipment, UL 1995, 1995 edition.
Liquid Fuel-Burning Heating Appliances for Manufactured Homes and Recreational Vehicle—UL 307A–1995, with revision September 98.
Fixed and Location-Dedicated Electric Room Heaters—UL 2021, 1997 with Revision 7/98.
Electric Baseboard Heating Equipment—UL 1042, 1994 with revision 9/98.
Electric Central Air Heating Equipment—UL 1096-Fourth Edition–1986 With Revisions July 16, 1986 and January 30, 1988.
Gas Burning Heating Appliances for Mobile Homes and Recreational Vehicles—UL 307B–1995, with revision September 98.
Gas Clothes Dryers Vol. 1, Type 1 Clothes Dryers—ANSI Z21.5.1–1995.
Gas Fired Absorption Summer Air Conditioning Appliances—ANSI Z21.40.1–1996, with Addendum Z21.40 1a–1997.
Gas-Fired Central Furnaces—ANSI Z21.47–1995, with Addenda Z21.47a–1995 and Z21.47b–1997.
Household Cooking Gas Appliances ANSI Z21.1–1996, with Addenda Z 21.1a–1997 and Z 21.1b–1998.
Refrigerators Using Gas Fuel—ANSI Z21.19–1990, with Addendum ANSI Z 21.19a–1992 and Z 21.19b–1995.
Gas Water Heaters Vol. 1, Storage Water Heaters With Input Ratings of 75,000 BTU per hour or Less—ANSI Z21.10.1–1998.
Household Electric Storage Tank Water Heaters—UL 174–1996, With Revision November 1997.
Gas Piping Systems Using Corrugated Stainless Steel Tubing—LC 1–1997.

Ferrous Pipe and Fittings

Standard Specification for Pipe, Steel, Black and Hot-Dipped, Zinc-Coated, Welded and Seamless—ASTM A53–93.
Standard Specification for Electric-Resistance-Welded Coiled Steel Tubing for Gas and Fuel Oil Lines—*ASTM A539–1990.
Pipe Threads, General Purpose (Inch)—ANSI/ASME B1.20.1–1983.
Welding and Seamless Wrought Steel Pipe—ANSI/ASME B36.10–1979.

Nonferrous Pipe, Tubing and Fittings

Standard Specification for Seamless Copper Water Tube—ASTM B88–93.
Standard Specification for Seamless Copper Tube for Air Conditioning and Refrigeration Field Service—ASTM B280, A–95.
Metal Connectors for Gas Appliances—ANSI Z21.24–1997.
Manually Operated Gas Valves for Appliances, Appliance Connector Valves and Hose End Valves—ANSI Z21.15–1997.
Standard for Gas Supply Connectors for Manufactured Homes—IAPMO TSC 9–1997.
Standard Specification for General Requirements for Wrought Seamless Copper and Copper-Alloy Tubes—ASTM B251–93.
Standard Specification for Seamless Copper Pipe, Standard Sizes—ASTM B42–93.

Miscellaneous

Factory-Made Air Ducts and Connectors—UL 181, 1998.
UL 181A, Standard for Safety Closure Systems for use with Rigid Air Ducts and Air Connectors, 1994, with revision 12/98.
UL 181B, Standard for Safety Closure Systems for use with Flexible Air Ducts and Air Connectors, 1995, with revision 12/98.
Tube Fittings for Flammable and Combustible Fluids, Refrigeration Service, and Marine Use—UL 109–1997.
Pigtails and Flexible Hose Connectors for LP-Gas—UL 569, 1996 with revision 9/98.
Roof Jacks for Manufactured Homes and Recreational Vehicles—UL 311, 1994 with revision 9/98.
Relief Valves and Automatic Gas Shutoff Devices for Hot Water Supply Systems—ANSI Z21.22–1986, With Addenda Z21.22a–1990.
Automatic Gas Ignition Systems and Components—ANSI Z21.20–1997, with Addendum Z 21.20a–1998.
Automatic Valves for Gas Appliances—ANSI Z21.21–1995, with Addendum Z 21.21a–1998.
Gas Appliance Thermostats—ANSI Z21.23–1993, with Addenda Z 21.23a–1994 and Z 21.23b–1997.
Gas Vents—UL 441, 1996 with revision 10/97.
Standard for the Installation of Oil-Burning Equipment, NFPA 31, 1997 Edition.
National Fuel Gas Code—NFPA 54–1996/ANSI Z223.1.
Warm Air Heating and Air Conditioning Systems, NFPA 90B, 1996 Edition.
Standard for the Storage and Handling of Liquefied Petroleum Gases, NFPA 58–1995 Edition.
Flares for Tubing—SAE–J533b–1992.

Chimneys, Factory-Built Residential Type and Building Heating Appliance—UL 103, 1995, with revision 2/96.
Factory-Built Fireplaces—UL 127–1996 with revision 6/98.
Room Heaters Solid-Fuel Type—UL 1482, 1996 with revision 9/98.
Standard for Safety Fireplace Stoves—UL 737, 1996 with revision 6/98.
Unitary Air-Conditioning and Air-Source Heat Pump Equipment—ANSI/ARI 210/240–89.
AGA Requirements for Gas Connectors for Connection of Fixed Appliances for Outdoor Installation, Park Trailers and Manufactured (Mobile) Homes to the Gas Supply—No. 3–87.

23. In § 3280.704, revise paragraph (b)(5)(i) to read as follows:

§ 3280.704 Fuel supply systems.

* * * * *

(b) * * *

(5) *LP-gas safety devices.* (i) DOT containers shall be provided with safety relief devices as required by the regulation of the U.S. Department of Transportation. ASME containers shall be provided with relief valves in accordance with subsection 221 of NFPA 58–1995, Standard for the Storage and Handling Liquefied Petroleum Gases. Safety relief valves shall have direct communication with the vapor space of the vessel.

* * * * *

24. In § 3280.705, revise paragraphs (b)(3), (b)(4), (c)(2), (l)(1), (l)(2)(ii), and (l)(3) to read as follows:

§ 3280.705 Gas piping systems.

* * * * *

(b) * * *

(3) Copper Tubing shall be annealed type, Grade K or L, conforming to the Standard Specification for Seamless Copper Water Tube (ASTM B88–93) or shall comply with the Standard Specification for Seamless Copper Tube for Air Conditioning and Refrigeration Service, ASTM 280–1995. Copper tubing shall be internally tinned.

(4) Steel tubing shall have a minimum wall thickness of 0.032 inch for tubing of ½ inch diameter and smaller and 0.049 inch for diameters ½ inch and larger. Steel tubing shall be in accordance with ASTM Standard Specification for Electric-Resistance-Welded Coiled Steel Tubing for Gas and Fuel Oil Lines, ASTM 539–1990, and shall be externally corrosion protected.

(c) * * *

(2) The connection(s) between units shall be made with a connector(s) listed for exterior use or direct plumbing sized in accordance with § 3280.705(d). A shutoff valve of the non-displaceable rotor type conforming to ANSI Z21.15–1997, Manually Operated Gas Valves for Appliances, Appliances Connector Valves and Hose End Valves, suitable for outdoor use shall be installed at each crossover point upstream of the connection when listed connectors are used.

* * * * *

(l) * * *

(1) A listed LP-Gas flexible connection conforming to UL 569–1998, Standard for Pigtails and Flexible Hose Connectors for LP Gas, or equal shall be supplied when LP-Gas cylinders(s) and regulator(s) are supplied.

(2) * * *

(ii) The outlet shall be provided with an approved quick-disconnect device, which shall be designed to provide a positive seal on the supply side of the gas system when the appliance is disconnected. A shutoff valve of the non-displaceable rotor type conforming to ANSI Z21.15–1997, Manually Operated Gas Valves, Shall be installed immediately upstream of the quick-disconnect device. The complete device shall be provided as part of the original installation.

* * * * *

(3) *Valves.* A shutoff valve shall be installed in the fuel piping at each appliance inside the manufactured home structure, upstream of the union or connector in addition to any valve on the appliance and so arranged to be accessible to permit servicing of the appliance and removal of its components. The shutoff valve shall be located within 6 feet of any cooking appliance and within 3 feet of any other appliance. A shutoff valve may serve more than one appliance if located as required above. Shutoff valve shall be of the non-displaceable rotor type and conform to ANSI Z21.15–1997, Manually Operated Gas Valves.

* * * * *

25. In § 3280.706, revise paragraph (b)(3) to read as follows:

§ 3280.706 Oil piping systems.

* * * * *

(b) * * *

(3) Copper tubing shall be annealed type, Grade K or L conforming to the Standard Specification for Seamless Copper Water Tube, ASTM B88–93, or shall comply with ASTM B280–1995, Standard Specification for Seamless Copper Tube for Air Conditioning and Refrigeration Field Service.

* * * * *

26. In § 3280.707, revise paragraph (f) to read as follows:

§ 3280.707 Heat producing appliances.

* * * * *

(f) *Oil-fired heating equipment.* All oil-fired heating equipment shall conform to liquid fuel-burning heating appliances for UL 307A–1995, with revision 9/98, Liquid Fuel-Burning Heating Appliances for Mobile Homes and Recreational Vehicles, and be installed in accordance with Standard for the Installation of Oil Burning Equipment, NFPA 31–1997. Regardless of the requirements of the above referenced standards, or any other referenced standards, the following are not required:

(1) External switches or remote controls which shut off the burner or the flow of oil to the burner, or

(2) An emergency disconnect switch to interrupt electric power to the equipment under conditions of excessive temperature.

27. In § 3280.709, add paragraph (h) to read as follows:

§ 3280.709 Installation of appliances.

* * * * *

(h) A corrosion resistant water drip collection and drain pan shall be installed under each water heater that will allow water leaking from the water heater to drain to the exterior of the manufactured homes, or a drain.

28. In § 3280.714, revise paragraph (a)(2) to read as follows:

§ 3280.714 Appliance cooling.

(a) * * *

(2) Gas fired absorption air conditioners shall be listed or certified in accordance with ANSI Z21.40.1–1996, Gas Fired Absorption Summer Air Conditioning Appliance, and certified by a nationally recognized testing agency capable of providing follow-up service.

* * * * *

29. In § 3280.715, revise paragraph (c), the introductory text of paragraph (e), and paragraph (e)(1) to read as follows:

§ 3280.715 Circulating air systems.

* * * * *

(c) *Joints and seams.* Joints and seams of sheet metal and factory-made flexible ducts including trunks, branches, risers, crossover ducts, and crossover duct plenums shall be mechanically secured and made substantially airtight. Slip joints in sheet metal ducts shall have a lap of at least 1 inch and shall be mechanically fastened. Tapes or caulking compounds shall be permitted to be used for sealing mechanically secure joints. Sealants and tapes shall be applied only to surfaces that are dry and dust-, dirt-, oil-, and grease-free. Tapes and mastic closure systems for use with factory-made rigid fiberglass air ducts and air connectors shall be listed in accordance with UL Standard 181A–1998. Tapes and mastic closure systems

for use with factory-made flexible air ducts and air connectors shall be listed in accordance with UL Standard 181B–1998.

* * * * *

(e) *Registers and grills.* Fittings connecting the registers and grills to the duct system shall be constructed of metal or material which complies with the requirements of Class 1 or 2 ducts under UL 181–1998, Factory Made Air Ducts and Connectors. Air supply terminal devices (registers) when installed in kitchen, bedrooms and bathrooms shall be equipped with adjustable closeable dampers. Registers or grills shall be constructed of metal or conform with the following:

(1) Be made of a material classified 94V–0 or 94V–1 when tested as described in UL 94–1996, Test for Flammability of Plastic Materials for Parts in Devices and Appliances.

* * * * *

30. In § 3280.801, revise paragraphs (a) and (b) to read as follows:

§ 3280.801 Scope.

(a) Subpart I of this standard and part B of Article 550 of the National Electrical Code (NFPA No. 70–1996) cover the electrical conductors and equipment installed within or on manufactured homes and the conductors that connect manufactured homes to a supply of electricity.

(b) In addition to the requirements of this standard and Article 550 of the National Electrical Code (NFPA No. 70–1996) the applicable portions of other Articles of the National Electrical Code shall be followed covering electrical installations in manufactured homes. Wherever the requirements of this standard differ from the National Electrical Code, this standard shall apply.

* * * * *

31. In § 3280.803, revise the last sentence of the caption following the illustration in paragraph (g), paragraph (k)(1), the introductory text of paragraph (k)(3), and paragraphs (k)(3)(ii) and (k)(3)(iii) to read as follows:

§ 3280.803 Power supply.

* * * * *

(g) * * *

* * * Complete details of the 50-ampere cap and receptacle can be found in the American National Standard Dimensions of Caps, Plugs, and Receptacles, Grounding Type (ANSI/NEMA—WD–6—Wiring Devices—Dimensional Requirements, 1997).

* * * * *

(k) * * *

(1) One mast weatherhead installation installed in accordance with Article 230 of the National Electrical Code NFPA No. 70–1996 containing four continuous insulated, color-coded, feeder conductors, one of which shall be an equipment grounding conductor; or

* * * * *

(3) Service equipment installed on the manufactured home in accordance with Article 230 of the National Electrical Code NFPA No. 70–1996; and

* * * * *

(ii) Exterior equipment, or the enclosure in which it is installed shall be weatherproof and installed in accordance with Article 373–2 of the National Electrical Code NFPA No. 70–1996. Conductors shall be suitable for use in wet locations;

(iii) The neutral conductor shall be connected to the system grounding conductor on the supply side of the main disconnect in accordance with Articles 250–23, 25, and 53 of NFPA No. 70–1996.

* * * * *

32. In § 3280.804, revise paragraph (a) and the first sentence of paragraph (k) to read as follows:

§ 3280.804 Disconnecting means and branch-circuit protective equipment.

(a) The branch-circuit equipment shall be permitted to be combined with the disconnecting means as a single assembly. Such a combination shall be permitted to be designated as a distribution panelboard. If a fused distribution panelboard is used, the maximum fuse size of the mains shall be plainly marked with lettering at least ¼-inch high and visible when fuses are changed. (See Section 110–22 of NFPA 70–1996, National Electrical Code, concerning identification of each disconnecting means and each service, feeder, or branch circuit at the point where it originated and the type marking needed.)

* * * * *

(k) When a home is provided with installed service equipment, a single disconnecting means for disconnecting the branch circuit conductors from the service entrance conductors shall be provided in accordance with Part F of Article 230 of the National Electrical Code, NFPA No. 70–1996.* * *

* * * * *

33. In § 3280.805, revise paragraph (a)(3)(iv) to read as follows:

§ 3280.805 Branch circuits required.

(a) * * *

(3) * * *

(iv) The rating of range branch circuit shall be based on the range demand as specified or ranges in § 3280.811, Item B(5) of Method 1. For central air conditioning, see Article 440 of the National Electrical Code (NFPA No. 70–1996).

* * * * *

34. In § 3280.806, revise paragraph (a)(2) and paragraph (d)(9) to read as follows:

§ 3280.806 Receptacle outlets.

(a) * * *

(2) Installed according to section 210–7 of the National Electrical Code (NFPA No. 70–1996).

* * * * *

(d) * * *

(9) At least one wall receptacle outlet shall be installed in bathrooms within 36 inches (914 mm) of the outside edge of each basin. The receptacle outlet shall be located on a wall that is adjacent to the basin location. This receptacle shall be in addition to any receptacle that is part of a lighting fixture or appliance. The receptacle shall not be enclosed within a bathroom cabinet or vanity.

* * * * *

35. In § 3280.807, revise paragraph (c) to read as follows:

§ 3280.807 Fixtures and appliances.

* * * * *

(c) If a lighting fixture is provided over a bathtub or in a shower stall, it shall be of the enclosed and gasketed type, listed for wet locations. See also Article 410–4(d) of the National Electrical Code NFPA No. 70–1996.

* * * * *

36. In § 3280.808, revise paragraphs (a), (m), (o), and (q), remove paragraph (r), and redesignate paragraph (s) as paragraph (r), to read as follows:

§ 3280.808 Wiring methods and materials.

(a) Except as specifically limited in this part, the wiring methods and materials specified in the National Electrical Code (NFPA No. 70–1996) shall be used in manufactured homes.

* * * * *

(m) Outlet boxes of dimensions less than those required in Table 370–16(a) of the National Electrical Code (NFPA No. 70–1996) shall be permitted provided the box has been tested and approved for the purpose.

* * * * *

(o) Outlet boxes shall fit closely to openings in combustible walls and ceilings and shall be flush with the finish surface or project therefrom. In walls and ceilings of noncombustible material, outlet boxes and fittings shall be installed so that the front edge of the box or fitting will not be set back from the finished surface more than ¼ inch. Plaster, drywall, or plasterboard

surfaces that are broken or incomplete shall be repaired so that there will be no gaps or open spaces greater than ⅛ inch at the edge of the box or fitting.

* * * * *

(q) A substantial brace for securing a box, fitting or cabinet shall be as described in the National Electrical Code, NFPA 70–1996 Article 370–23(b), or the brace, including the fastening mechanism to attach the brace to the home structure, shall withstand a force of 50 lbs. applied to the brace at the intended point(s) of attachment for the box in a direction perpendicular to the surface in which the box is installed.

* * * * *

37. In § 3280.811, revise the introductory text of paragraph (b) to read as follows:

§ 3280.811 Calculations.

* * * * *

(b) The following is an optional method of calculation for lighting and appliance loads for manufactured homes served by single 3-wire 120/240 volt set of feeder conductors with an ampacity of 100 or greater. The total load for determining the feeder ampacity may be computed in accordance with the following table instead of the method previously specified. Feeder conductors whose demand load is determined by this optional calculation shall be permitted to have the neutral load determined by section 220–22 of the National Electrical Code (NFPA No. 70–1996). The loads identified in the table as ''other load'' and as ''Remainder of other load'' shall include the following:

* * * * *

Dated: November 2, 2004.

John C. Weicher,

Assistant Secretary for Housing—Federal Housing Commissioner.

[FR Doc. 04–26381 Filed 11–26–04; 2:46 pm]

BILLING CODE 4210–27–P

Reader Aids

Federal Register

Vol. 69, No. 230

Wednesday, December 1, 2004

CUSTOMER SERVICE AND INFORMATION

Federal Register/Code of Federal Regulations	
General Information, indexes and other finding aids	**202–741–6000**
Laws	**741–6000**
Presidential Documents	
Executive orders and proclamations	**741–6000**
The United States Government Manual	**741–6000**
Other Services	
Electronic and on-line services (voice)	**741–6020**
Privacy Act Compilation	**741–6064**
Public Laws Update Service (numbers, dates, etc.)	**741–6043**
TTY for the deaf-and-hard-of-hearing	**741–6086**

ELECTRONIC RESEARCH

World Wide Web

Full text of the daily Federal Register, CFR and other publications is located at: **http://www.gpoaccess.gov/nara/index.html**

Federal Register information and research tools, including Public Inspection List, indexes, and links to GPO Access are located at: **http://www.archives.gov/federal_register/**

E-mail

FEDREGTOC-L (Federal Register Table of Contents LISTSERV) is an open e-mail service that provides subscribers with a digital form of the Federal Register Table of Contents. The digital form of the Federal Register Table of Contents includes HTML and PDF links to the full text of each document.

To join or leave, go to **http://listserv.access.gpo.gov** and select *Online mailing list archives, FEDREGTOC-L, Join or leave the list (or change settings);* then follow the instructions.

PENS (Public Law Electronic Notification Service) is an e-mail service that notifies subscribers of recently enacted laws.

To subscribe, go to **http://listserv.gsa.gov/archives/publaws-l.html** and select *Join or leave the list (or change settings);* then follow the instructions.

FEDREGTOC-L and **PENS** are mailing lists only. We cannot respond to specific inquiries.

Reference questions. Send questions and comments about the Federal Register system to: **fedreg.info@nara.gov**

The Federal Register staff cannot interpret specific documents or regulations.

FEDERAL REGISTER PAGES AND DATE, DECEMBER

69805–70050..... 1

CFR PARTS AFFECTED DURING DECEMBER

At the end of each month, the Office of the Federal Register publishes separately a List of CFR Sections Affected (LSA), which lists parts and sections affected by documents published since the revision date of each title.

REMINDERS

The items in this list were editorially compiled as an aid to Federal Register users. Inclusion or exclusion from this list has no legal significance.

RULES GOING INTO EFFECT DECEMBER 1, 2004

AGRICULTURE DEPARTMENT

Agricultural Marketing Service

Milk marketing orders:

Northeast et al.; published 11-26-04

ENVIRONMENTAL PROTECTION AGENCY

Air quality implementation plans; approval and promulgation; various States:

Arizona; published 11-1-04

FEDERAL TRADE COMMISSION

Fair and Accurate Credit Transaction Act; implementation:

Free annual file disclosures; published 6-24-04

Fair and Accurate Credit Transactions Act; implementation:

Identity theft provisions; published 11-3-04

HOMELAND SECURITY DEPARTMENT

Coast Guard

Drawbridge operations:

Florida; published 11-16-04

Massachusetts; published 11-9-04

PENSION BENEFIT GUARANTY CORPORATION

Single-employer plans:

Allocation of assets—

Interest assumptions for valuing and paying benefits; published 11-15-04

TRANSPORTATION DEPARTMENT

Federal Aviation Administration

Airworthiness directives:

Boeing; published 11-16-04

General Electric Co.; published 10-27-04

Mooney Airplane Co., Inc.; published 11-22-04

Raytheon; published 10-27-04

Various transport category airplanes; published 10-27-04

TREASURY DEPARTMENT

Internal Revenue Service

Employment taxes and collection of income taxes at source:

Federal unemployment tax deposits; de minimis threshold; published 12-1-04

COMMENTS DUE NEXT WEEK

AGRICULTURE DEPARTMENT

Agricultural Marketing Service

Cotton classing, testing and standards:

Classification services to growers; 2004 user fees; Open for comments until further notice; published 5-28-04 [FR 04-12138]

COURT SERVICES AND OFFENDER SUPERVISION AGENCY FOR THE DISTRICT OF COLUMBIA

Semi-annual agenda; Open for comments until further notice; published 12-22-03 [FR 03-25121]

ENERGY DEPARTMENT

Meetings:

Environmental Management Site-Specific Advisory Board—

Oak Ridge Reservation, TN; Open for comments until further notice; published 11-19-04 [FR 04-25693]

ENERGY DEPARTMENT

Energy Efficiency and Renewable Energy Office

Commercial and industrial equipment; energy efficiency program:

Test procedures and efficiency standards—

Commercial packaged boilers; Open for comments until further notice; published 10-21-04 [FR 04-17730]

ENERGY DEPARTMENT

Federal Energy Regulatory Commission

Electric rate and corporate regulation filings:

Virginia Electric & Power Co. et al.; Open for comments until further notice; published 10-1-03 [FR 03-24818]

ENVIRONMENTAL PROTECTION AGENCY

Environmental statements; availability, etc.:

Coastal nonpoint pollution control program—

Minnesota and Texas; Open for comments until further notice; published 10-16-03 [FR 03-26087]

Water pollution; effluent guidelines for point source categories:

Meat and poultry products processing facilities; Open for comments until further notice; published 9-8-04 [FR 04-12017]

HEALTH AND HUMAN SERVICES DEPARTMENT

Food and Drug Administration

Reports and guidance documents; availability, etc.:

Evaluating safety of antimicrobial new animal drugs with regard to their microbiological effects on bacteria of human health concern; Open for comments until further notice; published 10-27-03 [FR 03-27113]

Medical devices—

Dental noble metal alloys and base metal alloys; Class II special controls; Open for comments until further notice; published 8-23-04 [FR 04-19179]

HOMELAND SECURITY DEPARTMENT

Coast Guard

Anchorage regulations:

Maryland; Open for comments until further notice; published 1-14-04 [FR 04-00749]

INTERIOR DEPARTMENT

Fish and Wildlife Service

Endangered and threatened species permit applications

Recovery plans—

Paiute cutthroat trout; Open for comments until further notice; published 9-10-04 [FR 04-20517]

NUCLEAR REGULATORY COMMISSION

Environmental statements; availability, etc.:

Fort Wayne State Developmental Center; Open for comments until further notice; published 5-10-04 [FR 04-10516]

SMALL BUSINESS ADMINISTRATION

Disaster loan areas:

Maine; Open for comments until further notice; published 2-17-04 [FR 04-03374]

OFFICE OF UNITED STATES TRADE REPRESENTATIVE

Trade Representative, Office of United States

Generalized System of Preferences:

2003 Annual Product Review, 2002 Annual Country Practices Review, and previously deferred product decisions; petitions disposition; Open for comments until further notice; published 7-6-04 [FR 04-15361]

TRANSPORTATION DEPARTMENT

Federal Aviation Administration

Airworthiness directives:

Boeing; Open for comments until further notice; published 8-16-04 [FR 04-18641]

LIST OF PUBLIC LAWS

This is a continuing list of public bills from the current session of Congress which have become Federal laws. It may be used in conjunction with ''P L U S'' (Public Laws Update Service) on 202–741–6043. This list is also available online at *http://www.archives.gov/federal_register/public_laws/public_laws.html*.

The text of laws is not published in the **Federal Register** but may be ordered in ''slip law'' (individual pamphlet) form from the Superintendent of Documents, U.S. Government Printing Office, Washington, DC 20402 (phone, 202–512–1808). The text will also be made available on the Internet from GPO Access at *http://www.gpoaccess.gov/plaws/index.html*. Some laws may not yet be available.

S. 2986/P.L. 108–415

To amend title 31 of the United States Code to increase the public debt limit. (Nov. 19, 2004; 118 Stat. 2337)

H.J. Res. 114/P.L. 108–416

Making further continuing appropriations for the fiscal year 2005, and for other purposes. (Nov. 21, 2004; 118 Stat. 2338)

Last List November 9, 2004

Public Laws Electronic Notification Service (PENS)

PENS is a free electronic mail notification service of newly enacted public laws. To subscribe, go to *http://listserv.gsa.gov/archives/publaws-l.html*

Note: This service is strictly for E-mail notification of new laws. The text of laws is not available through this service. **PENS** cannot respond to specific inquiries sent to this address.

TABLE OF EFFECTIVE DATES AND TIME PERIODS—DECEMBER 2004

This table is used by the Office of the Federal Register to compute certain dates, such as effective dates and comment deadlines, which appear in agency documents. In computing these dates, the day after publication is counted as the first day.

When a date falls on a weekend or holiday, the next Federal business day is used. (See 1 CFR 18.17)

A new table will be published in the first issue of each month.

DATE OF FR PUBLICATION	15 DAYS AFTER PUBLICATION	30 DAYS AFTER PUBLICATION	45 DAYS AFTER PUBLICATION	60 DAYS AFTER PUBLICATION	90 DAYS AFTER PUBLICATION
Dec 1	Dec 16	Jan 3	Jan 18	Jan 31	March 1
Dec 2	Dec 17	Jan 3	Jan 18	Jan 31	March 2
Dec 3	Dec 20	Jan 3	Jan 18	Feb 1	March 3
Dec 6	Dec 21	Jan 5	Jan 20	Feb 4	March 7
Dec 7	Dec 22	Jan 6	Jan 21	Feb 7	March 7
Dec 8	Dec 23	Jan 7	Jan 24	Feb 7	March 8
Dec 9	Dec 27	Jan 10	Jan 24	Feb 7	March 9
Dec 10	Dec 27	Jan 10	Jan 24	Feb 8	March 10
Dec 13	Dec 28	Jan 12	Jan 27	Feb 11	March 14
Dec 14	Dec 29	Jan 13	Jan 28	Feb 14	March 14
Dec 15	Dec 30	Jan 14	Jan 31	Feb 14	March 15
Dec 16	Jan 3	Jan 18	Jan 31	Feb 14	March 16
Dec 17	Jan 3	Jan 18	Jan 31	Feb 15	March 17
Dec 20	Jan 4	Jan 19	Feb 3	Feb 18	March 21
Dec 21	Jan 5	Jan 20	Feb 4	Feb 22	March 21
Dec 22	Jan 6	Jan 21	Feb 7	Feb 22	March 22
Dec 23	Jan 7	Jan 24	Feb 7	Feb 22	March 23
Dec 27	Jan 11	Jan 26	Feb 10	Feb 25	March 28
Dec 28	Jan 12	Jan 27	Feb 11	Feb 28	March 28
Dec 29	Jan 13	Jan 28	Feb 14	Feb 28	March 29
Dec 30	Jan 14	Jan 31	Feb 14	Feb 28	March 30