Federal Register

12–8–04 Wednesday
Vol. 69 No. 235 Dec. 8, 2004

Pages 70871–71338

The **FEDERAL REGISTER** (ISSN 0097–6326) is published daily, Monday through Friday, except official holidays, by the Office of the Federal Register, National Archives and Records Administration, Washington, DC 20408, under the Federal Register Act (44 U.S.C. Ch. 15) and the regulations of the Administrative Committee of the Federal Register (1 CFR Ch. I). The Superintendent of Documents, U.S. Government Printing Office, Washington, DC 20402 is the exclusive distributor of the official edition. Periodicals postage is paid at Washington, DC.

The **FEDERAL REGISTER** provides a uniform system for making available to the public regulations and legal notices issued by Federal agencies. These include Presidential proclamations and Executive Orders, Federal agency documents having general applicability and legal effect, documents required to be published by act of Congress, and other Federal agency documents of public interest.

Documents are on file for public inspection in the Office of the Federal Register the day before they are published, unless the issuing agency requests earlier filing. For a list of documents currently on file for public inspection, see *www.archives.gov.*

The seal of the National Archives and Records Administration authenticates the Federal Register as the official serial publication established under the Federal Register Act. Under 44 U.S.C. 1507, the contents of the **Federal Register** shall be judicially noticed.

The **Federal Register** is published in paper and on 24x microfiche. It is also available online at no charge as one of the databases on GPO Access, a service of the U.S. Government Printing Office.

The online edition of the **Federal Register** *www.gpoaccess.gov/nara,* available through GPO Access, is issued under the authority of the Administrative Committee of the Federal Register as the official legal equivalent of the paper and microfiche editions (44 U.S.C. 4101 and 1 CFR 5.10). It is updated by 6 a.m. each day the **Federal Register** is published and includes both text and graphics from Volume 59, Number 1 (January 2, 1994) forward.

For more information about GPO Access, contact the GPO Access User Support Team, call toll free 1-888-293-6498; DC area 202-512-1530; fax at 202-512-1262; or via e-mail at *gpoaccess@gpo.gov.* The Support Team is available between 7:00 a.m. and 9:00 p.m. Eastern Time, Monday–Friday, except official holidays.

The annual subscription price for the **Federal Register** paper edition is $749 plus postage, or $808, plus postage, for a combined **Federal Register, Federal Register** Index and List of CFR Sections Affected (LSA) subscription; the microfiche edition of the **Federal Register** including the **Federal Register** Index and LSA is $165, plus postage. Six month subscriptions are available for one-half the annual rate. The prevailing postal rates will be applied to orders according to the delivery method requested. The price of a single copy of the daily **Federal Register,** including postage, is based on the number of pages: $11 for an issue containing less than 200 pages; $22 for an issue containing 200 to 400 pages; and $33 for an issue containing more than 400 pages. Single issues of the microfiche edition may be purchased for $3 per copy, including postage. Remit check or money order, made payable to the Superintendent of Documents, or charge to your GPO Deposit Account, VISA, MasterCard, American Express, or Discover. Mail to: New Orders, Superintendent of Documents, P.O. Box 371954, Pittsburgh, PA 15250-7954; or call toll free 1-866-512-1800, DC area 202-512-1800; or go to the U.S. Government Online Bookstore site, see *bookstore.gpo.gov.*

There are no restrictions on the republication of material appearing in the **Federal Register.**

How To Cite This Publication: Use the volume number and the page number. Example: 69 FR 12345.

Postmaster: Send address changes to the Superintendent of Documents, Federal Register, U.S. Government Printing Office, Washington DC 20402, along with the entire mailing label from the last issue received.

SUBSCRIPTIONS AND COPIES

PUBLIC	
Subscriptions:	
Paper or fiche	**202–512–1800**
Assistance with public subscriptions	**202–512–1806**
General online information	**202–512–1530; 1–888–293–6498**
Single copies/back copies:	
Paper or fiche	**202–512–1800**
Assistance with public single copies	**1–866–512–1800 (Toll-Free)**
FEDERAL AGENCIES	
Subscriptions:	
Paper or fiche	**202–741–6005**
Assistance with Federal agency subscriptions	**202–741–6005**

What's NEW!

Federal Register Table of Contents via e-mail

Subscribe to FEDREGTOC, to receive the **Federal Register** Table of Contents in your e-mail every day.

If you get the HTML version, you can click directly to any document in the issue.

To subscribe, go to **http://listserv.access.gpo.gov** and select:

Online mailing list archives
FEDREGTOC-L
Join or leave the list

Then follow the instructions.

What's NEW!

Regulations.gov, the award-winning Federal eRulemaking Portal

Regulations.gov is the one-stop U.S. Government web site that makes it easy to participate in the regulatory process.

Try this fast and reliable resource to find all rules published in the *Federal Register* that are currently open for public comment. Submit comments to agencies by filling out a simple web form, or use available e-mail addresses and web sites.

The Regulations.gov e-democracy initiative is brought to you by NARA, GPO, EPA and their eRulemaking partners.

Visit the web site at: **http://www.regulations.gov**

Printed on recycled paper.

Contents

Federal Register

Vol. 69, No. 235

Wednesday, December 8, 2004

Agricultural Marketing Service
RULES
Oranges, grapefruit, tangerines, and tangelos grown in—
Florida, 70874–70877

Agriculture Department
See Agricultural Marketing Service
See Commodity Credit Corporation
See Farm Service Agency
See Food and Nutrition Service
See Forest Service
See Grain Inspection, Packers and Stockyards Administration
See Rural Business-Cooperative Service
See Rural Housing Service
See Rural Utilities Service

Alcohol and Tobacco Tax and Trade Bureau
RULES
Alcohol; viticultural area designations:
Southern Oregon; Douglas, Jackson, and Josephine Counties, OR, 70889–70893

Arts and Humanities, National Foundation
See National Foundation on the Arts and the Humanities

Centers for Disease Control and Prevention
NOTICES
Agency information collection activities; proposals, submissions, and approvals, 71058–71060

Civil Rights Commission
NOTICES
Meetings; State advisory committees:
Florida, 70995–70996

Coast Guard
NOTICES
Environmental statements; availability, etc.:
Shipboard Technology Evaluation Program, 71068

Commerce Department
See Foreign-Trade Zones Board
See Industry and Security Bureau
See International Trade Administration
See National Oceanic and Atmospheric Administration

Commodity Credit Corporation
NOTICES
Agency information collection activities; proposals, submissions, and approvals, 70992

Defense Department
NOTICES
Federal Acquisition Regulation (FAR):
Agency information collection activities; proposals, submissions, and approvals, 71015–71016

Education Department
NOTICES
Agency information collection activities; proposals, submissions, and approvals; correction, 71123

Energy Department
See Federal Energy Regulatory Commission

Environmental Protection Agency
RULES
Air quality implementation plans; approval and promulgation; various States:
Pennsylvania, 70893–70897
Hazardous waste program authorizations:
Tennessee, 70898–70902
Pesticides; tolerances in food, animal feeds, and raw agricultural commodities:
Cyazofamid
Technical correction, 70897–70898
PROPOSED RULES
Air quality implementation plans; approval and promulgation; various States:
Pennsylvania, 70944–70946
Hazardous waste program authorizations:
Tennessee, 70946
NOTICES
Meetings:
FIFRA Scientific Advisory Panel, 71032–71036
Pesticide, food, and feed additive petitions:
Valent U.S.A. Corp., 71045–71049
Pesticide registration, cancellation, etc.:
Clothianidin, 71036–71040
Ethoxyquin, 71040–71042
New Nautical Coatings, Inc., 71042–71045
Toxic and hazardous substances control:
New chemicals—
Receipt and status information, 71049–71054

Executive Office of the President
See Presidential Documents
See Trade Representative, Office of United States

Farm Service Agency
RULES
Program regulations:
Servicing delinquent community facility loans, 70883–70885

Federal Aviation Administration
RULES
Airworthiness standards:
Special conditions—
Sky International A1, A1A, and A1B airplanes, 70885–70887
Restricted areas
Correction, 70887–70888
PROPOSED RULES
Airworthiness directives:
BAE Systems (Operations) Ltd., 70938–70940
Boeing, 70936–70938
NOTICES
Aeronautical land-use assurance; waivers:
Raleigh County Memorial Airport, WV, 71096
Airport noise compatibility program:
Georgetown Municipal Airport, TX, 71096–71097
Environmental statements; notice of intent:
Mesquite Airport, NV; replacement general aviation airport, 71097

Exemption petitions; summary and disposition, 71097–71098

Federal Energy Regulatory Commission
NOTICES
Electric rate and corporate regulation filings, 71022–71029
Environmental statements; notice of intent:
Freebird Gas Storage, L.L.C, 71029–71031
Meetings:
Alaska natural gas transportation projects; open seasons regulations; technical conference, 71031–71032
Applications, hearings, determinations, etc.:
Columbia Gas Transmission Corp., 71016
Columbia Gulf Transmission Co., 71016
El Paso Natural Gas Co., 71017
Iroquois Gas Transmission System, L.P., 71017–71018
National Fuel Gas Supply Corp., 71018–71019
Paiute Pipeline Co., 71019
Public Service Co. of New Mexico, 71019–71020
Southern Indiana Gas & Electric Co. et al., 71020
Southern Star Central Gas Pipeline, Inc., 71020–71021
Tennessee Gas Pipeline Co., 71021
Viking Gas Transmission Co., 71021–71022
Williston Basin Interstate Pipeline Co., 71022

Federal Maritime Commission
NOTICES
Agreements filed, etc., 71054–71055
Ocean transportation intermediary licenses:
(CAL.) KTL International, Inc., et al., 71055
Global Link Logistics, Inc., 71055–71056
Heron International, Inc., et al., 71056
Tillicum Global Networks, Inc., et al., 71056

Federal Motor Carrier Safety Administration
NOTICES
Motor carrier safety standards:
Driver qualifications—
Boss, Thomas J., et al.; vision requirement exemption applications, 71100–71101
Buis, Robert R., et al.; vision requirement exemption applications, 71098–71100

Federal Reserve System
PROPOSED RULES
Truth in lending (Regulation Z):
Open-end (revolving) credit rules; disclosures and protections, 70925–70936
NOTICES
Banks and bank holding companies:
Formations, acquisitions, and mergers, 71056–71057
Permissible nonbanking activities, 71057

Federal Trade Commission
NOTICES
Premerger notification waiting periods; early terminations, 71057–71058

Fish and Wildlife Service
PROPOSED RULES
Alaska National Interest Lands Conservation Act; Title VIII Implementation (subsistance priority):
Southwestern Alaska coastal areas; subsistence management jurisdiction, 70940–70944
Endangered and threatened species:
Critical habitat designations—
Lane Mountain milk-vetch, 70971–70972
Thread-leaved brodiaea, 71283–71319
NOTICES
Endangered and threatened species:
Topeka shiner; 5 year review, 71071–71072
Endangered and threatened species permit applications, 71070–71071

Food and Nutrition Service
RULES
Child nutrition programs:
National School Lunch and School Breakfast Programs—
Nutrient analysis of school meals; weighted averages use requirement; waiver extended, 70872–70874
National School Lunch Program—
Reimbursable meals; fluid milk requirements, 70871–70872
NOTICES
Agency information collection activities; proposals, submissions, and approvals, 70992–70993

Foreign-Trade Zones Board
NOTICES
Applications, hearings, determinations, etc.:
New Hampshire—
Millipore Corp.; polyvinylidene floride filtering device manufacturing plant, 70996
Various States
Crude oil refineries/petrochemical complexes, 70996–70997

Forest Service
PROPOSED RULES
Alaska National Interest Lands Conservation Act; Title VIII Implementation (subsistance priority):
Southwestern Alaska coastal areas; subsistence management jurisdiction, 70940–70944

General Services Administration
NOTICES
Federal Acquisition Regulation (FAR):
Agency information collection activities; proposals, submissions, and approvals, 71015–71016

Grain Inspection, Packers and Stockyards Administration
NOTICES
Agency designation actions:
Arizona, 70993–70994
Kansas, 70994
Texas, 70994–70995
Agency information collection activities; proposals, submissions, and approvals, 70995

Health and Human Services Department
See Centers for Disease Control and Prevention
See National Institutes of Health
See Public Health Service

Homeland Security Department
See Coast Guard

Industry and Security Bureau
NOTICES
Export privileges, actions affecting:
Morey, Gerald; correction, 71123

Interior Department
See Fish and Wildlife Service
See Land Management Bureau
See National Park Service

NOTICES
Committees; establishment, renewal, termination, etc.:
Canyons of the Ancients National Monument Advisory Committee, 71068–71069
Senior Executive Service:
Performance Review Board; membership, 71069

Internal Revenue Service
NOTICES
Meetings:
Taxpayer Advocacy Panels, 71121–71122

International Trade Administration
NOTICES
Antidumping:
Frozen and canned warmwater shrimp from—
China, 70997–71005
Vietnam, 71005–71010
Sebacic acid from—
China, 71010–71011
Silicomanganese from—
Brazil, 71011–71014

Justice Department
See Justice Programs Office

Justice Programs Office
NOTICES
Agency information collection activities; proposals, submissions, and approvals, 71073–71075

Land Management Bureau
NOTICES
Environmental statements; notice of intent:
Elko County, NV; sensitive bird species in three grazing allotments, 71072

National Aeronautics and Space Administration
NOTICES
Committees; establishment, renewal, termination, etc.:
Arenonautical Technologies Strategic Roadmap Committee, 71075
Earth-like Planets Strategic Roadmap Committee, 71075
Earth Science and Applications from Space Strategic Roadmap Committee, 71075–71076
Education Strategic Roadmap Committee, 71076
Exploration Transportation System Strategic Roadmap Committee, 71076–71077
International Space Station Strategic Roadmap Committee, 71077
Nuclear Systems Strategic Roadmap Committee, 71077
Robotic and Human Lunar Exploration Strategic Roadmap Committee, 71077–71078
Solar System Exploration Strategic Roadmap Committee, 71078
Space Shuttle Strategic Roadmap Committee, 71078–71079
Sun-Solar System Connection Strategic Roadmap Committee, 71079
Universe Exploration Strategic Roadmap Committee, 71079
Federal Acquisition Regulation (FAR):
Agency information collection activities; proposals, submissions, and approvals, 71015–71016

National Foundation on the Arts and the Humanities
NOTICES
Agency information collection activities; proposals, submissions, and approvals, 71079–71081

National Highway Traffic Safety Administration
RULES
Motor vehicle safety standards:
Occupant crash protection—
Integral lap/shoulder safety belts; rear seats requirement, 70904–70919
PROPOSED RULES
Anthropomorphic test devices:
Occupant crash protection—
SID-IIsFRG side impact crash test dummy, 5th percentile adult female, 70947–70971
NOTICES
Grants and cooperative agreements; availability, etc.:
Crash Injury Research and Engineering Network; Level One Trauma Centers, 71101–71118
Motor vehicle safety standards:
Nonconforming vehicles—
Importation eligibility; determinations, 71118–71119

National Institutes of Health
NOTICES
Agency information collection activities; proposals, submissions, and approvals, 71060–71062
Meetings:
National Cancer Institute, 71062
National Institute of Allergy and Infectious Diseases, 71063–71065
National Institute of Child Health and Human Development, 71064
National Institute of Neurological Disorders and Stroke, 71062–71063
National Institute on Alcohol Abuse and Alcoholism, 71064–71065
National Institute on Drug Abuse, 71063
Scientific Review Center, 71065–71067

National Oceanic and Atmospheric Administration
RULES
Fishery conservation and management:
Alaska; fisheries of Exclusive Economic Zone—
Pacific cod, 70924
Northeastern United States fisheries—
Atlantic herring, 70923–70924
Northeast multispecies, 70919–70923
PROPOSED RULES
Fishery conservation and management:
Alaska; fisheries of Exclusive Economic Zone—
Bering Sea and Aleutian Islands groundfish, 70974–70991
West Coast States and Western Pacific fisheries—
Pacific sardine, 70973–70974
NOTICES
Committees; establishment, renewal, termination, etc.:
Monterey Bay National Marine Sanctuary Advisory Council, 71014–71015

National Park Service
NOTICES
National Register of Historic Places:
Pending nominations, 71072–71073

National Science Foundation
NOTICES
Committees; establishment, renewal, termination, etc.:
Business Operations Advisory Committee, 71081

Nuclear Regulatory Commission
NOTICES
Environmental statements; availability, etc.:
General Electric Co., 71082–71084
Meetings:
Nuclear Waste Advisory Committee, 71084–71085
Reactor Safeguards Advisory Committee, 71085
Applications, hearings, determinations, etc.:
Idaho Spent Fuel Facility, 71081–71082
Union Electric Co., 71082

Office of United States Trade Representative
See Trade Representative, Office of United States

Personnel Management Office
NOTICES
Agency information collection activities; proposals, submissions, and approvals, 71085–71086

Presidential Documents
EXECUTIVE ORDERS
Courts-Martial Manual, United States; amendments (EO 13365), 71331–71338

Public Health Service
NOTICES
National Toxicology Program:
Center for Evaluation of Risks to Human Reproduction—
Future evaluation of styrene; comments and expert panel nominations requests, 71067–71068

Research and Special Programs Administration
RULES
Hazardous materials:
Transportation—-
Loading, unloading, and storage; effective date delay, 70902–70904
NOTICES
Hazardous materials:
Applications; exemptions, renewals, etc., 71120–71121

Rural Business-Cooperative Service
RULES
Program regulations:
Servicing delinquent community facility loans, 70883–70885

Rural Housing Service
RULES
Program regulations:
Servicing delinquent community facility loans, 70883–70885

Rural Utilities Service
RULES
Grants:
Technical assistance grants, 70877–70883
Program regulations:
Servicing delinquent community facility loans, 70883–70885

Securities and Exchange Commission
RULES
Fair and Accurate Credit Transactions Act:
Consumer report information disposal, 71321–71329
PROPOSED RULES
Securities:
Self-regulation; concept release; comment request, 71255–71282
Self-regulatory organizations; governance, administration, transparency and ownership, and reporting requirements, 71125–71254
NOTICES
Self-regulatory organizations; proposed rule changes:
Chicago Board Options Exchange, Inc., 71087–71088
Fixed Income Clearing Corp., 71086–71087
International Securities Exchange LLC, 71088–71089
National Securities Clearing Corp., 71089–71090
New York Stock Exchange, Inc., 71090–71093
Philadelphia Stock Exchange, Inc., 71093–71095

State Department
RULES
International Traffic in Arms regulations:
Registration fee change, 70888–70889

Surface Transportation Board
NOTICES
Railroad operation, acquisition, construction, etc.:
Monon Rail Preservation Corp., 71121

Trade Representative, Office of United States
NOTICES
U.S.-Singapore Free Trade Agreement; selection of four U.S. laws schools whose degrees will be recognized by Singapore; comment request, 71095–71096

Transportation Department
See Federal Aviation Administration
See Federal Motor Carrier Safety Administration
See National Highway Traffic Safety Administration
See Research and Special Programs Administration
See Surface Transportation Board

Treasury Department
See Alcohol and Tobacco Tax and Trade Bureau
See Internal Revenue Service

Separate Parts In This Issue

Part II
Securities and Exchange Commission, 71125–71254

Part III
Securities and Exchange Commission, 71255–71282

Part IV
Interior Department, Fish and Wildlife Service, 71283–71319

Part V
Securities and Exchange Commission, 71321–71329

Part VI
Executive Office of the President, Presidential Documents, 71331–71338

Reader Aids
Consult the Reader Aids section at the end of this issue for phone numbers, online resources, finding aids, reminders, and notice of recently enacted public laws.

To subscribe to the Federal Register Table of Contents LISTSERV electronic mailing list, go to http://listserv.access.gpo.gov and select Online mailing list archives, FEDREGTOC-L, Join or leave the list (or change settings); then follow the instructions.

CFR PARTS AFFECTED IN THIS ISSUE

A cumulative list of the parts affected this month can be found in the Reader Aids section at the end of this issue.

3 CFR

Executive Orders:

12473 (Amended by EO 13365).....71333
13365.....71333

7 CFR

210 (2 documents) 70871, 70872
220.....70872
905.....70874
1775.....70877
1951.....70883

12 CFR

Proposed Rules:

226.....70925

14 CFR

23.....70885
73.....70887

Proposed Rules:

39 (2 documents) 70936, 70938

17 CFR

248.....71322

Proposed Rules:

240 (2 documents) 71126, 71256
242.....71126
249.....71126

22 CFR

122.....70888
129.....70888

27 CFR

9.....70889

36 CFR

Proposed Rules:

242.....70940

40 CFR

52 (2 documents) 70893, 70895
180.....70897
271.....70898

Proposed Rules:

52 (2 documents) 70944, 70945
271.....70946

49 CFR

171.....70902
173.....70902
174.....70902
175.....70902
176.....70902
177.....70902
178.....70902
571.....70904
585.....70904
586.....70904
589.....70904
590.....70904
596.....70904
597.....70904

Proposed Rules:

572.....70947

50 CFR

648 (2 documents) 70919, 70923
679.....70924

Proposed Rules:

17 (2 documents) 70971, 71284
100.....70940
660.....70973
679.....70974

Rules and Regulations

Federal Register

Vol. 69, No. 235

Wednesday, December 8, 2004

This section of the FEDERAL REGISTER contains regulatory documents having general applicability and legal effect, most of which are keyed to and codified in the Code of Federal Regulations, which is published under 50 titles pursuant to 44 U.S.C. 1510.

The Code of Federal Regulations is sold by the Superintendent of Documents. Prices of new books are listed in the first FEDERAL REGISTER issue of each week.

DEPARTMENT OF AGRICULTURE

Food and Nutrition Service

7 CFR Part 210

RIN 0584–AD55

National School Lunch Program: Requirement for Variety of Fluid Milk in Reimbursable Meals

AGENCY: Food and Nutrition Service, USDA.

ACTION: Final rule.

SUMMARY: This final rule makes changes to the regulations governing the National School Lunch Program. Currently, reimbursable school lunches must offer types of fluid milk consistent with prior year preferences, unless the prior year preference for a particular type of milk was less than one percent of the total milk consumed.

In response to the requirements of the Child Nutrition and WIC Reauthorization Act of 2004, which amended the Richard B. Russell National School Lunch Act, the National School Lunch Program regulations are revised to require that schools offer, with meals, fluid milk in a variety of fat contents. The requirement for consistency with prior year preferences is removed. As a result of the legislation, schools are provided with more flexibility to expand choices based upon what school food service professionals believe are the most appropriate offerings to meet the needs and tastes of children, as well as what will best encourage the increased consumption of milk and its associate nutrients by schoolchildren.

DATES: Effective July 1, 2005.

FOR FURTHER INFORMATION CONTACT: Ms. Rosemary O'Connell, (*Rosemary.O'Connell@fns.usda.gov*) Section Chief, School Programs Section, Program Policy and Development Branch, Child Nutrition Division, Food and Nutrition Service, 3101 Park Center Drive, Room 634, Alexandria, VA 22302, (703) 305–2590.

SUPPLEMENTARY INFORMATION:

Background

The requirements for offering fluid milk as a part of a reimbursable lunch in the National School Lunch Program (NSLP) are described in 7 CFR 210.10 (m). Specifically, 7 CFR 210.10 (m)(1)(i) states that the types of milk offered by the school must be consistent with the types of milk consumed during the prior year, but stipulates that if a particular type of milk accounted for less than one percent (1%) of the total amount of milk consumed in the prior year, the school is not required to offer that type of milk. Section 102 of The Child Nutrition and WIC Reauthorization Act of 2004 (Public Law 108–265), amended section 9(a) of the Richard B. Russell National School Lunch Act (42 U.S.C. 1758(a)) by removing the requirement that types of milk offered be consistent with the types consumed in the previous year. This rule makes corresponding changes to the regulations for the NSLP (7 CFR Part 210).

Does This Provision Apply to the School Breakfast and Special Milk Programs?

No, this provision only applies to the NSLP. Under the terms of section 4(e) of the Child Nutrition Act of 1966 (42 U.S.C. 1773(e)), USDA sets minimum nutritional standards for the School Breakfast Program (SBP) and, under this authority, requires that fluid milk be offered for breakfasts. Section 3 of the Child Nutrition Act of 1966 (42 U.S.C. 1772) establishes the criteria for the Special Milk Program (SMP). Thus the SBP and the SMP already have the flexibility to offer any type(s) of milk.

Does This Provision Apply to the Afterschool Snack Service of the NSLP?

Yes, the provision applies to afterschool snack program. Section 17A(d) of the Richard B. Russell National School Lunch Act, (42 U.S.C. 1766a(d)), requires that meal supplements served to children participating in the afterschool snack service meet the same requirements as reimbursable school lunches. Thus, this provision does affect the requirements for fluid milk served in the afterschool snack service.

What Specific Changes Does This Rule Make?

- Removes the requirement in 7 210.10 (m)(1)(i) that types of fluid milk offered be consistent with the types consumed in the previous year, and adds the requirement that milk in a variety of fat contents be offered.
- Codifies the authority for schools to offer flavored or unflavored fluid milk and lactose-free fluid milk. Schools had already been authorized to offer these varieties, but this rule makes the schools'' authority a part of the regulatory language.

Executive Order 12866

This final rule has been determined to be non-significant and is not subject to review by the Office of Management and Budget under Executive Order 12866.

Public Law 104–4

Title II of the Unfunded Mandates Reform Act of 1995 (UMRA), Public Law 104–4, establishes a requirement for Federal agencies to assess the effects of their regulatory actions on State, local, and tribal governments and the private sector. Under section 202 of the UMRA, FNS generally prepares a written statement, including a cost-benefit analysis. This is done for proposed and final rules that have ''Federal mandates'' which may result in expenditures of $100 million or more in any one year by State, local, or tribal governments, in the aggregate, or by the private sector. When this statement is needed for a rule, section 205 of the UMRA generally requires FNS to identify and consider a reasonable number of regulatory alternatives. It must then adopt the least costly, most cost-effective or least burdensome alternative that achieves the objectives of the rule.

This final rule contains no Federal mandates of $100 million or more in any one year (under regulatory provisions of Title II of the UMRA) for State, local, and tribal governments or the private sector. Thus, this final rule is not subject to the requirements of sections 202 and 205 of the UMRA.

Regulatory Flexibility Act

This final rule has been reviewed with regard to the requirements of the Regulatory Flexibility Act (5 U.S.C. 601–612). Roberto Salazar, Administrator of the Food and Nutrition

Service, has certified that, because this rule is technical in nature, it will not have a significant economic impact on a substantial number of small entities.

Executive Order 12372

The National School Lunch Program is listed in the Catalog of Federal Domestic Assistance under No. 10.555. This program is subject to the provisions of Executive Order 12372, which requires intergovernmental consultation with State and local officials (7 CFR part 3015, subpart V, and final rule related notice at 48 FR 29115, June 24, 1983).

Federalism Summary Impact Statement

Executive Order 13132 requires Federal agencies to consider the impact of their regulatory actions on State and local governments. Where such actions have federalism implications, agencies are directed to provide a statement for inclusion in the preamble to the regulations describing the agency's considerations in terms of the three categories called for under section (6)(b)(2)(B) of Executive Order 13132. FNS has considered the impact of this rule on State and local governments and has determined that this rule does not have federalism implications. This rule does not impose substantial or direct compliance costs on State and local governments. Therefore, under Section 6(b) of the Executive Order, a federalism summary impact statement is not required.

Executive Order 12988

This final rule has been reviewed under Executive Order 12988, Civil Justice Reform. It is intended to have preemptive effect with respect to any State or local laws, regulations or policies which conflict with its provisions or which would impede its full implementation. This rule is not intended to have retroactive effect unless that is specified in the Effective Date section of the preamble of the final rule. Before any judicial challenge to the provisions of this rule or the application of its provisions, all applicable administrative procedures must be exhausted.

Civil Rights Impact Analysis

Under USDA Regulation 4300–4, Civil Rights Impact Analysis, FNS has reviewed this final rule to identify and address any major civil rights impacts the final rule might have on minorities, women, and persons with disabilities. After a careful review of the rule's intent and provisions, FNS has determined that this final rule will not in any way limit or reduce participants ability to participate in the Child Nutrition Programs on the basis of an individual's or group's race, color, national origin, sex, age, or disability. FNS found no factors that would negatively and disproportionately affect any group of individuals.

Paperwork Reduction Act

This final rule contains no paperwork burdens or information collection requirements that are subject to review by the Office of Management and Budget under the Paperwork Reduction Act of 1995 (44 U.S.C. 3507).

Government Paperwork Elimination Act

FNS is committed to compliance with the Government Paperwork Elimination Act (GPEA), which requires Government agencies to provide the public the option of submitting information or transacting business electronically to the maximum extent possible. This final rule contains no paperwork burdens or information collection requirements, and is thus in compliance with the GPEA.

Public Participation

This action is being finalized without prior notice or public comment under authority of 5 U.S.C. 553(b)(3)(A) and (B). The amendments contained in this final rule are nondiscretionary in nature, and therefore do not necessitate the opportunity for the public to offer comment. Thus, the Department has determined in accordance with 5 U.S.C. 553(b) that Notice of Proposed Rulemaking and Opportunity for Public Comment is unnecessary and contrary to the public interest and, in accordance with 5 U.S.C. 553(d), finds that good cause exists for making this action effective without prior public comment.

List of Subjects in 7 CFR Part 210

Children, Commodity School Program, Food assistance programs, Grants programs—social programs, National School Lunch Program, Nutrition, Reporting and recordkeeping requirements, Surplus agricultural commodities.

■ Accordingly, 7 CFR part 210 is amended as follows:

PART 210—NATIONAL SCHOOL LUNCH PROGRAM

■ 1. The authority citation for 7 CFR part 210 continues to read as follows:

Authority: 42 U.S.C. 1751–1760, 1779.

■ 2. In § 210.10, paragraph (m)(1)(i) is revised to read as follows:

§ 210.10 What are the nutrition standards and menu planning approaches for lunches and the requirements for afterschool snacks?

* * * * *

(m) * * *

(1) * * *

(i) Under all menu planning approaches for students, schools must offer students fluid milk in a variety of fat contents. Schools may offer flavored or unflavored milk and lactose-free fluid milk.

* * * * *

Dated: November 24, 2004.

Roberto Salazar,

Administrator, Food and Nutrition Service.

[FR Doc. 04–26934 Filed 12–7–04; 8:45 am]

BILLING CODE 3410–30–P

DEPARTMENT OF AGRICULTURE

Food and Nutrition Service

7 CFR Parts 210 and 220

RIN 0584–AD63

Waiver of the Requirement To Use Weighted Averages in the National School Lunch and School Breakfast Programs

AGENCY: Food and Nutrition Service, USDA.

ACTION: Final rule.

SUMMARY: This final rule makes a technical change to the regulations governing the nutrient analysis of meals served under the National School Lunch Program and School Breakfast Program. Program regulations require school food authorities to use ''weighted averages'' for nutrient analysis of their school meals. Under this method, the nutrient content of school meals is measured (weighted) according to the quantity of food items chosen by students. This final rule extends, until September 30, 2009, the waiver for conducting a weighted nutrient analysis. This rule responds to changes made under the Child Nutrition and WIC Reauthorization Act of 2004 and is intended to provide school food authorities with additional time to gain operational experience with nutrient analysis.

DATES: Effective January 7, 2005.

FOR FURTHER INFORMATION CONTACT: Ms. Rosemary O'Connell, Section Chief, School Programs Section, Policy and Program Development Branch, Child Nutrition Division, Food and Nutrition Service at 703–305–2635.

SUPPLEMENTARY INFORMATION: Section 110 of the Child Nutrition and WIC

Reauthorization Act of 2004 (Pub. L. 108–265) amended section 9(f)(5) of the Richard B. Russell National School Lunch Act, 42 U.S.C. 1758(f)(5), by waiving, until September 30, 2009, the requirement that school food authorities (SFAs) planning menus using nutrient standard menu planning conduct a weighted analysis of all foods offered to children as part of their reimbursable meals. A weighted nutrient analysis is based on the nutrient and calorie levels that each menu item selected contributes to the reimbursable meal. This requirement derives from the School Meal Initiative for Healthy Children, a comprehensive plan that focuses on the nutrient content of the school meals to ensure that children get the key nutrients and calories needed for their well-being. In the lunch program, this requirement is set forth at 7 CFR 210.10(i)(5)(i); in the breakfast program it is located at 7 CFR 220.8(e)(5)(i).

Prior to Public Law 108–265, the National School Lunch Program regulations under 7 CFR 210.10 and 7 CFR 220.8 waived compliance with the weighted averaging requirement until September 30, 2003. The ending date for the waiver was extended through Food and Nutrition Service (FNS) guidance in response to several Continuing Resolutions prior to enactment of Public Law 108–265.

Through Public Law 108–265, Congress re-instated the waiver until September 30, 2009 in response to concerns about costs and complexity from program sponsors. However, weighted analysis is still considered a more accurate method for doing nutrient analysis of school meals because it is based on the actual number of each menu item selected by children, rather than simply being an average of the nutrients in an equal number of items included in the school menu.

The waiver extension applies to all SFAs using nutrient analysis, as well as to State agencies conducting independent analysis as part of their ongoing review of schools' compliance with the Federal nutrition standards. The provision does not prohibit State agencies from requiring schools to use weighted averages when doing nutrient analysis, nor does it prohibit State agencies from using weighted averages when doing nutrient analyses as a part of nutrition reviews of schools using food-based menu planning systems. Weighted analysis enables State agencies to provide well-targeted guidance on any nutrition improvements needed in a school menu.

Executive Order 12866

This final rule has been determined to be not significant for purposes of Executive Order 12866 and, therefore, has not been reviewed by the Office of Management and Budget.

Regulatory Flexibility Act

This rule has been reviewed with regard to the requirements of the Regulatory Flexibility Act (5 U.S.C. 601–612). Roberto Salazar, Administrator of the Food and Nutrition Service, has certified that this rule will not have a significant economic impact on a substantial number of small entities. Additionally, the Department of Agriculture does not anticipate any adverse fiscal impact on local schools.

Public Law 104–4

Title II of the Unfunded Mandate Reform Act of 1995 (UMRA), Public Law 104–4, establishes requirements for Federal agencies to assess the effects of their regulatory actions on State, local, and tribal governments and the private sector. Under Section 202 of the UMRA, FNS must generally prepare a written statement, including a cost-benefit analysis, for proposed and final rules with ''Federal mandates'' that may result in expenditures to State, local or tribal governments, in the aggregate, or to the private sector, of $100 million or more in any one year. When such a statement is needed for a rule, section 205 of the UMRA generally requires FNS to identify and consider a reasonable number of regulatory alternatives and adopt the least costly, more cost-effective or least burdensome alternative that achieves the objectives of the rule.

This rule contains no Federal mandates (under the regulatory provisions of Title II of the UMRA) for State, local, and tribal governments or the private sector of $100 million or more in any one year. Thus, this final rule is not subject to the requirements of sections 202 and 205 of the UMRA.

Executive Order 12372

The National School Lunch Program (NSLP) and the School Breakfast Program (SBP) are listed in the Catalog of Federal Domestic Assistance under No. 10.555 and No. 10.553, respectively. These programs are subject to the provisions of Executive Order 12372, which requires intergovernmental consultation with State and local officials. State agencies, local program sponsors, and NSLP and SBP advocates had the opportunity to provide input during reauthorization of the child nutrition programs.

Federalism Summary Impact Statement

Executive Order 13132 requires Federal agencies to consider the impact of their regulatory actions on State and local governments. Where such actions have federalism implications, agencies are directed to provide a statement for inclusion in the preamble to the regulations describing the agency's considerations in terms of the three categories called for under section (6)(b)(2)(B) of Executive Order 13132. FNS has considered the impact of this rule on State and local governments and has determined that this rule does not have federalism implications. This rule does not impose substantial or direct compliance costs on State and local governments. Therefore, under section 6(b) of the Executive Order, a federalism summary impact statement is not required.

Executive Order 12988

This rule has been reviewed under Executive Order 12988, Civil Justice Reform. This rule is not intended to have preemptive effect with respect to any State or local laws, regulations or policies which conflict with its provisions or which would otherwise impede its full implementation. This rule is not intended to have retroactive effect unless so specified in the Effective Date paragraph of the final rule. Prior to any judicial challenge to the provisions of this rule or the application of its provisions, all applicable administrative procedures must be exhausted.

Paperwork Reduction Act

The Paperwork Reduction Act of 1995 (44 U.S.C. chap. 35; see 5 CFR part 1320) requires that the Office of Management and Budget (OMB) approve all collections of information by a Federal agency before they can be implemented. Respondents are not required to respond to any collection of information unless it displays a current valid OMB control number. This rule does not contain information collection requirements subject to approval by OMB under the Paperwork Reduction Act.

Government Paperwork Elimination Act

FNS is committed to compliance with the Government Paperwork Elimination Act (GPEA), which requires government agencies to provide the public the option of submitting information or transacting business electronically to the maximum extent possible. The waiver extension implemented through this regulation does not require compliance with the GPEA.

Public Participation

This action is being finalized without prior notice or public comment under authority of 5 U.S.C. 553(b)(3)(A) and (B) to quickly implement the waiver extension granted by the Child Nutrition and WIC Reauthorization Act of 2004. Thus, the Department of Agriculture has determined in accordance with 5 U.S.C. 553(b) that Notice of Proposed Rulemaking and Opportunity for Public Comments is unnecessary and contrary to the public interest and, in accordance with 5 U.S.C. 553(d), finds that good cause exists for making this action effective without prior public participation.

Civil Rights Impact Analysis

FNS has reviewed this final rule in accordance with the Department Regulation 4300–4, ''Civil Rights Impact Analysis,'' to identify any major civil rights impacts the rule might have on children on the basis of race, color, national origin, sex, religion, or disability. After a careful review of the rule's intent and provisions, FNS has determined that it does not affect the participation of protected individuals in the National School Lunch Program.

List of Subjects

7 CFR Part 210

Food and Nutrition Service, Grant programs–education, Grant programs–health, Infants and children, Nutrition, Penalties, Reporting and record keeping requirements, School breakfast and lunch programs, Surplus agricultural commodities.

7 CFR Part 220

Food and Nutrition Service, Grant programs–education, Grant programs–health, Infants and children, Nutrition, Reporting and record keeping requirements, School breakfast and lunch programs.

■ Accordingly, 7 CFR Parts 210 and 220 are amended as follows:

PART 210—NATIONAL SCHOOL LUNCH PROGRAM

■ 1. The authority citation for 7 CFR part 210 continues to read as follows:

Authority: 42 U.S.C. 1751–1760, 1779.

§ 210.10 [Amended]

■ 2. In § 210.10:

■ a. The last sentence of paragraph (i)(5)(i) is amended by removing the year ''2003'' and adding in its place the year ''2009''.

■ b. The last sentence of paragraph (l)(4)(viii) is amended by removing the year ''2003'' and adding in its place the year ''2009''.

PART 220—SCHOOL BREAKFAST PROGRAM

■ 1. The authority citation for 7 CFR part 220 continues to read as follows:

Authority: 42 U.S.C. 1773, 1779, unless otherwise noted.

§ 220.8 [Amended]

■ 2. In § 220.8:

■ a. The last sentence of paragraph (e)(5)(i) is amended by removing the year ''2003'' and adding in its place the year ''2009''.

■ b. The last sentence of paragraph (h)(3)(viii) is amended by removing the year ''2003'' and adding in its place the year ''2009''.

Dated: November 24, 2004.

Roberto Salazar,

Administrator, Food and Nutrition Service.

[FR Doc. 04–26933 Filed 12–7–04; 8:45 am]

BILLING CODE 3410–30–P

DEPARTMENT OF AGRICULTURE

Agricultural Marketing Service

7 CFR Part 905

[Docket No. FV04–905–5 FIR]

Oranges, Grapefruit, Tangerines, and Tangelos Grown in Florida; Modification of the Procedures Used To Limit the Volume of Small Red Seedless Grapefruit Grown in Florida

AGENCY: Agricultural Marketing Service, USDA.

ACTION: Final rule.

SUMMARY: The Department of Agriculture (USDA) is adopting, as a final rule, without change, an interim final rule that changed the procedures used to limit the volume of sizes 48 and 56 red seedless grapefruit entering the fresh market under the marketing order for oranges, grapefruit, tangerines, and tangelos grown in Florida (order). The order is administered locally by the Citrus Administrative Committee (Committee). This rule continues in effect changes in the way a handler's average week is calculated when quantities of small red seedless grapefruit are regulated and changes the provisions governing overshipments. This action makes the regulation more responsive to industry needs and better allocates base quantities.

DATES: Effective January 7, 2005.

FOR FURTHER INFORMATION CONTACT: Doris Jamieson, Southeast Marketing Field Office, Marketing Order Administration Branch, Fruit and Vegetable Programs, AMS, USDA, 799 Overlook Drive, Suite A, Winter Haven, Florida 33884; telephone: (863) 324–3375, Fax: (863) 325–8793; or George Kelhart, Technical Advisor, Marketing Order Administration Branch, Fruit and Vegetable Programs, AMS, USDA, 1400 Independence Avenue, SW., STOP 0237, Washington, DC 20250–0237; telephone: (202) 720–2491, Fax: (202) 720–8938.

Small businesses may request information on complying with this regulation by contacting Jay Guerber, Marketing Order Administration Branch, Fruit and Vegetable Programs, AMS, USDA, 1400 Independence Avenue, SW., STOP 0237, Washington, DC 20250–0237; telephone: (202) 720–2491, Fax: (202) 720–8938, or e-mail: *Jay.Guerber@usda.gov.*

SUPPLEMENTARY INFORMATION: This rule is issued under Marketing Agreement No. 84 and Marketing Order No. 905, both as amended (7 CFR part 905), regulating the handling of oranges, grapefruit, tangerines, and tangelos grown in Florida, hereinafter referred to as the ''order.'' The order is effective under the Agricultural Marketing Agreement Act of 1937, as amended (7 U.S.C. 601–674), hereinafter referred to as the ''Act.''

USDA is issuing this rule in conformance with Executive Order 12866.

This rule has been reviewed under Executive Order 12988, Civil Justice Reform. This rule is not intended to have retroactive effect. This rule will not preempt any State or local laws, regulations, or policies, unless they present an irreconcilable conflict with this rule.

The Act provides that administrative proceedings must be exhausted before parties may file suit in court. Under section 608c(15)(A) of the Act, any handler subject to an order may file with USDA a petition stating that the order, any provision of the order, or any obligation imposed in connection with the order is not in accordance with law and request a modification of the order or to be exempted therefrom. A handler is afforded the opportunity for a hearing on the petition. After the hearing USDA would rule on the petition. The Act provides that the district court of the United States in any district in which the handler is an inhabitant, or has his or her principal place of business, has jurisdiction to review USDA's ruling on the petition, provided an action is filed not later than 20 days after the date of the entry of the ruling.

This rule continues in effect changes in the procedures used to limit the volume of sizes 48 and 56 red seedless

grapefruit entering the fresh market. This rule changes the way a handler's average week is calculated when quantities of small red seedless grapefruit are regulated by adjusting the prior period used from five preceding seasons to three preceding seasons. This action also changes the provisions governing overshipments. This rule makes the regulation more responsive to industry needs and better allocates base quantities. The Committee unanimously recommended these changes at a meeting held on June 15, 2004.

Section 905.52 of the order provides authority to limit shipments of any grade or size, or both, of any variety of Florida citrus. Such limitations may restrict the shipment of a portion of a specified grade or size of a variety. Under such a limitation, the quantity of such grade or size a handler may ship during a particular week would be established as a percentage of the total shipments of such variety by such handler in a prior period, established by the Committee and approved by USDA.

Section 905.153 of the regulations specifies procedures for limiting the volume of small red seedless grapefruit entering the fresh market. With this change, this section defines the prior period required by § 905.52 as an average week within the immediately preceding three seasons. An average week is calculated for each handler. This section specifies that the Committee may recommend only a certain percentage of sizes 48 and 56 red seedless grapefruit be made available for fresh shipment for any week or weeks during the regulatory period. Under such a limitation, the quantity of sizes 48 and 56 red seedless grapefruit that a handler may ship is calculated by taking the recommended percentage times the handler's average week. Section 905.153 also details overshipment provisions specifying that any handler may ship an amount of sizes 48 and 56 red seedless grapefruit up to 10 percent greater than their allotted volume each week. The quantity of such overshipment is deducted from the handler's allotment for the following week. Overshipments are not permitted during the final regulatory week.

This rule amends § 905.153 by revising the definition of prior period and the language governing overshipments. This rule continues in effect changes in the number of preceding seasons used to calculate a handler's average week from five preceding seasons to three preceding seasons. This rule also continues in effect changes in the provisions regarding overshipments redefining when overshipments are permitted.

Section 905.52 specifies that whenever any size limitation restricts the shipment of a portion of a specified size, the quantity each handler may ship during a particular week shall be based on a prior period recommended by the Committee and approved by USDA. When the Committee initially recommended the procedures in § 905.153 to limit the volume of small red seedless grapefruit entering the fresh market during the regulated period (61 FR 69011, December 31, 1996), they determined an average week within the preceding five seasons would be the prior period used to calculate a handler's base quantity for each week of regulation.

Prior to this change, an average week was calculated by adding the total red seedless grapefruit shipments by a handler during the 33-week period beginning the third Monday in September for the preceding five seasons. This total was divided by five to establish an average season. The average season was then divided by the 33 weeks in a season to derive the average week. When the Committee utilizes these provisions and establishes percentages for the regulatory period, a handler's average week is multiplied by the applicable percentage to establish that handler's base quantity for shipping small red seedless grapefruit during that particular week.

The Committee initially chose to use the past five seasons to calculate an average season, because it thought that the five-year period helped adjust for variations in growing conditions between the seasons. At the time, the Committee believed using five seasons provided the most accurate picture of an average season and by using the average season to calculate an average week, provided each handler with an equitable base from which to establish shipments.

However, since these procedures were established, there have been many changes in the industry. Some handlers have increased their volume of red seedless grapefruit shipments, while others have decreased their shipments or stopped shipping grapefruit altogether.

Because of the continuing changes in the industry, the Committee believes that using the past five seasons no longer provides the most accurate picture of an average season. At its June 15, 2004, meeting, the Committee discussed the prior period, and unanimously recommended changing from a five-season average to a three-season average when calculating a handler's average week. The Committee believes that this adjustment in the prior period better reflects changes in the industry, and better allocates the base quantities for all handlers of red seedless grapefruit.

The Committee further believes that the use of a three-season average is more responsive in reallocating base than a five-season average. Under a five-season average, it can be several seasons before changes in shipping volume are reflected in the allotment a handler receives. With a five-season average, handlers that have decided to limit their grapefruit business receive more allotment than they need for several seasons even though this allotment could be better utilized by handlers that are increasing their market for red seedless grapefruit. The Committee believes that this change better allocates allotment by increasing the base for handlers that have increased their red grapefruit shipments and by reducing the base for handlers that have reduced their red grapefruit shipments.

Consequently, the Committee also believes that this change reduces the need for loans and transfers by shifting additional base to those with increasing shipments. Handlers who are increasing their volume of red seedless grapefruit shipments often need additional allotment to meet their market demands and rely on the provisions in § 905.153 that provide for allotment loans and transfers. Under these provisions, a handler may borrow allotment from another handler or allotments can be transferred from one handler to another. These procedures provide a means for handlers who have increased their volume of red seedless grapefruit shipments to meet the demands of the market and their buyers.

However, handlers do not know how much allotment other handlers have or if the allotment will be used. The Committee believes that this change from a five to a three-year average in computing base quantities better reflects the needs of the industry and lessens the need for loans and transfers. This benefits handlers and the Committee staff who process loans and transfers. Therefore, the Committee recommended changing the prior period used to calculate an average week from five seasons to three seasons.

The Committee also discussed revising the provisions in § 905.153(d) relating to overshipments and the loan or transfer of allotment during week 22. As stated previously, any handler may ship an amount of sizes 48 and 56 red seedless grapefruit up to 10 percent greater than their allotment during any regulated week. The quantity of such overshipment is deducted from the handler's allotment for the following week. Prior to this change, the rules and

regulations specified that overshipments were not allowed during week 22, because week 22 is the last week of the regulation period and does not provide an opportunity for repayment of any overshipments.

The Committee is continuously meeting during the regulated period to discuss the market for red seedless grapefruit and possible changes to the weekly percentages. It believes that market conditions could cause it to recommend the removal of regulation prior to the end of week 22. To recognize this possibility, the Committee recommended changing these provisions to specify that overshipments are not permitted during the last week of regulation rather than week 22.

Section 8e of the Act requires that whenever grade, size, quality or maturity requirements are in effect for certain commodities under a domestic marketing order, including grapefruit, imports of that commodity must meet the same or comparable requirements. This rule does not change the minimum grade and size requirements under the order. Therefore, no change is necessary in the grapefruit import regulations as a result of this action.

Final Regulatory Flexibility Analysis

Pursuant to requirements set forth in the Regulatory Flexibility Act (RFA), the Agricultural Marketing Service (AMS) has considered the economic impact of this action on small entities. Accordingly, AMS has prepared this final regulatory flexibility analysis.

The purpose of the RFA is to fit regulatory actions to the scale of business subject to such actions in order that small businesses will not be unduly or disproportionately burdened. Marketing orders issued pursuant to the Act, and the rules issued thereunder, are unique in that they are brought about through group action of essentially small entities acting on their own behalf. Thus, both statutes have small entity orientation and compatibility.

There are approximately 75 handlers of Florida grapefruit who are subject to regulation under the marketing order and approximately 11,000 growers of citrus in the regulated area. Small agricultural service firms, including handlers, are defined by the Small Business Administration (SBA) as those having annual receipts of less than $5,000,000, and small agricultural producers are defined as those having annual receipts of less than $750,000 (13 CFR 121.201).

Based on industry and Committee data, the average annual f.o.b. price for fresh Florida red seedless grapefruit during the 2003–04 season was approximately $7.58 per 4/5-bushel carton, and total fresh shipments for the 2003–04 season are estimated at 24.7 million cartons of red grapefruit. Approximately 25 percent of all handlers handled 75 percent of Florida's grapefruit shipments. Using the average f.o.b. price, at least 80 percent of the grapefruit handlers could be considered small businesses under the SBA definition. Therefore, the majority of Florida grapefruit handlers may be classified as small entities. The majority of Florida grapefruit producers may also be classified as small entities.

This rule continues in effect revisions to the procedures used to limit the volume of sizes 48 and 56 red seedless grapefruit entering the fresh market under the order. This rule changes the way a handler's average week is calculated for purposes of this limitation by adjusting the prior period used from the five preceding seasons to the three preceding seasons. This action also amends the language governing overshipments for the last week of regulation. This rule revises the provisions of § 905.153. Authority for this action is provided in § 905.52 of the order. The Committee unanimously recommended this action at a meeting on June 15, 2004.

This rule revises procedures in § 905.153 used in implementing percentage size regulations for small red seedless grapefruit under the order. These procedures will be applied uniformly for all handlers regardless of size. This action is not expected to decrease the overall consumption of red seedless grapefruit.

While during the period of regulation this change may result in some handlers receiving a smaller allotment of small-sized red grapefruit, it provides additional allotment to those handlers that have increased shipments. This rule changes how each handler's share of the weekly allotment is calculated, but has a limited affect on the total allotment made available by the weekly percentages. This change in itself does not reduce the total weekly industry base available. It only reallocates the distribution of the base. Statistics for 2003–04 show that the total available industry allotment was used in only 3 weeks of the 22 week regulated period. This change should result in a better utilization of the overall industry base allotments. Because the base allotments will be readily available to those handlers needing it, handlers will be better able to meet buyer needs and additional shipments might result.

In addition, if handlers require additional allotment, they can still transfer, borrow, or loan allotment based on their needs in a given week. Approximately 315 loans and transfers were utilized last season. This rule will help reduce the need for loans and transfers by better allocating the available base. This will help reduce the amount of time and effort needed to reallocate allotment through loans and transfers. This may result in a cost savings by reducing administrative costs for the Committee.

This rule provides handlers with allotment more reflective of their current operations. In addition, this rule changes the provisions on overshipments to provide for the possibility that the Committee might choose to end regulation prior to week 22. This rule makes the regulation more responsive to industry needs and better allocates base quantities.

The Committee discussed maintaining the number of seasons used to calculate the prior period at five. However, the Committee believes that a three-season period will result in a better utilization of the overall industry base allotment. Therefore, this alternative was rejected.

This rule will not impose any additional reporting or recordkeeping requirements on either small or large grapefruit handlers. As with all Federal marketing order programs, reports and forms are periodically reviewed to reduce information requirements and duplication by industry and public sector agencies.

In addition, as noted in the initial regulatory flexibility analysis, USDA has not identified any relevant Federal rules that duplicate, overlap or conflict with this rule. However, red seedless grapefruit must meet the requirements as specified in the U.S. Standards for Grades of Florida Grapefruit (7 CFR 51.760 through 51.784) issued under the Agricultural Marketing Act of 1946 (7 U.S.C. 1621 through 1627).

Further, the Committee's meeting was widely publicized throughout the citrus industry and all interested persons were invited to attend the meeting and participate in Committee deliberations on all issues. Like all Committee meetings, the June 15, 2004, meeting was a public meeting and all entities, both large and small, were able to express views on this issue.

An interim final rule concerning this action was published in the **Federal Register** on August 16, 2004. Copies of the rule were mailed or sent via facsimile to all Committee members and grapefruit growers and handlers. In addition, the rule was made available through the internet by USDA and the Office of the Federal Register. That rule provided for a 30-day comment period,

which ended September 15, 2004. No comments were received.

A small business guide on complying with fruit, vegetable, and specialty crop marketing agreements and orders may be viewed at: *http://www.ams.usda.gov/fv/moab.html.* Any questions about the compliance guide should be sent to Jay Guerber at the previously mentioned address in the **FOR FURTHER INFORMATION CONTACT** section.

After consideration of all relevant material presented, including the Committee's recommendation, and other information, it is found that finalizing the interim final rule, without change, as published in the **Federal Register**, (69 FR 50275, August 16, 2004) will tend to effectuate the declared policy of the Act.

List of Subjects in 7 CFR Part 905

Grapefruit, Marketing agreements, Oranges, Reporting and recordkeeping requirements, Tangelos, Tangerines.

PART 905—ORANGES, GRAPEFRUIT, TANGERINES, AND TANGELOS GROWN IN FLORIDA

■ Accordingly, the interim final rule amending 7 CFR part 905 which was published at 69 FR 50275 on August 16, 2004, is adopted as a final rule without change.

Dated: December 2, 2004.

A.J. Yates,

Administrator, Agricultural Marketing Service.

[FR Doc. 04–26861 Filed 12–7–04; 8:45 am]

BILLING CODE 3410–02–P

DEPARTMENT OF AGRICULTURE

Rural Utilities Service

7 CFR Part 1775

RIN 0572–AB75

Technical Assistance Grants

AGENCY: Rural Utilities Service, USDA.

ACTION: Final rule.

SUMMARY: The Rural Utilities Service (RUS), an agency delivering the United States Department of Agriculture's Rural Development Utilities Programs, amends the regulation utilized to administer the technical assistance grant programs. This action is necessary to separate the technical assistance and training grant and solid waste management grant programs for clarification purposes, and to bring the regulation in line with revisions to OMB circulars. Additionally, it eliminates the requirement that applicants submit a pre-application when applying for grant funds. This action also transfers grant processing and servicing from the National Office to Rural Development State Offices. The intended effect is to separate the technical assistance and solid waste management programs and to reduce regulatory burdens on applicants.

DATES: This rule is effective January 7, 2005.

FOR FURTHER INFORMATION CONTACT: Stephen Saulnier, Loan Specialist, Water Programs Division, Rural Utilities Service, U.S. Department of Agriculture, 1400 Independence Avenue, SW., Room 2235–S, Stop 1570, Washington, DC 20250–1570. Telephone (202) 690–2526. E–Mail: *ssaulnie@rus.usda.gov.*

SUPPLEMENTARY INFORMATION:

Executive Order 12866

This rule has been determined to be not significant for the purposes of Executive Order 12866 and, therefore, has not been reviewed by the Office of Management and Budget (OMB).

Executive Order 12372

This rule is excluded from the scope of Executive Order 12372, Intergovernmental Consultation, which may require consultation with State and local officials. See the final rule related notice titled, ''Technical Assistance and Training Grants Program; Proposal to Exclude Program and Activity From Executive Order 12372,'' (53 FR 44505) which determined that the RUS grants were not covered by Executive Order 12372.

Executive Order 12988

This rule has been reviewed under Executive Order 12988, Civil Justice Reform. RUS has determined that this proposed rule meets the applicable standards provided in section 3 of the Executive Order. In addition, all State and local laws and regulations that are in conflict with this rule will be preempted; no retroactive effect will be given to the rule; and, in accordance with Section 212(e) of the Department of Agriculture Reorganization Act of 1994 (7 U.S.C section 6912(e)), administrative appeal procedures, if any are required, must be exhausted prior to initiating any action against the Department or its agencies.

Regulatory Flexibility Act Certification

Under section 605(b) of the Regulatory Flexibility Act (5 U.S.C. 605(b)), RUS certifies that this rule will not have a significant economic impact on a substantial number of small entities. The amendments reflect only statutory changes that Congress has mandated and over which RUS has no discretion.

Information Collection and Recordkeeping Requirements

The information collection and recordkeeping requirements contained in this rule have been cleared under OMB control number 0572–0112 in accordance with the Paperwork Reduction Act of 1995 (44 U.S.C. Chapter 35).

National Environmental Policy Act Certification

The Administrator of RUS has determined that this rule will not significantly affect the quality of the human environment as defined by the National Environmental Policy Act of 1969 (42 U.S.C. 4321 *et seq.*). Therefore, this action does not require an environmental impact statement or assessment.

Catalog of Federal Domestic Assistance

The programs described by this rule are listed in the Catalog of Federal Domestic Assistance Programs under numbers 10.761, Technical Assistance and Training Grants and 10.762, Solid Waste Management Grants. This catalog is available on a subscription basis from the Superintendent of Documents, the United States Government Printing Office, Washington, DC, 20402–9325, telephone number (202) 512–1800.

Unfunded Mandates

This rule contains no Federal mandates (under the regulatory provision of Title II of the Unfunded Mandates Reform Act of 1995) for State, local, and tribal governments or the private sector. Thus this rule is not subject to the requirements of section 202 and 205 of the Unfunded Mandates Reform Act of 1995.

Background

On November 2, 1987, the Farmers Home Administration (FmHA) (predecessor of RUS) published 7 CFR part 1942, subpart J, Technical Assistance and Training Grants, as a final rule in the **Federal Register** (52 FR 41950) implementing a new grant program. On February 5, 1992, FmHA published 7 CFR part 1942, subpart J, Technical Assistance and Training Grants, as a final rule in the **Federal Register** (57 FR 4357) revising the regulation to implement another new grant program. In 1994, when RUS assumed the functions of the Water and Waste Disposal programs from the former FmHA and the Rural Development Administration (RDA), RUS changed the Technical Assistance

and Training (TAT) and Solid Waste Management (SWM) grants regulations from 7 CFR 1942, subpart J, to 7 CFR 1775. Based on changes in the OMB circulars affecting these programs and RUS's experience and review of its existing procedures, RUS has determined that several changes are necessary in order to operate the grant programs in a smooth, efficient, and effective manner.

The existing 7 CFR part 1775 was designed to provide policy and procedures for RUS's technical assistance and training grants and solid waste management grants, in addition to RUS's internal administrative actions. There has been some confusion as to the basic differences in the programs, especially pertaining to eligibility. To avoid confusion and clarify eligibility requirements, objectives, and purposes, separate sections have been developed for each grant program.

Unsuccessful applicants have often requested the basis upon which funding decisions were made. The existing regulation contains general statements describing the priority criteria used in making those decisions. The rule provides a more detailed description of the project priority criteria used in determining if an applicant is selected or not selected for funding.

Over the years, the number of proposals for projects to be operated within a single State, especially in the Solid Waste Management Grants program, have drastically increased. Due to the requirements of the existing regulations, these projects are processed and serviced from the National Office. Experience has shown that these projects should be processed and serviced from the Rural Development State Offices because of their proximity to the project and the familiarity of field personnel with grantee organizations. RUS delegates approval authority to the State Directors for projects to be operated only within their States. Funding for these projects will be determined by the National Office on a competitive basis.

The rule contains a variety of procedural changes from the provisions of the current regulation. Some of these revisions are minor or are merely intended to clarify existing RUS policy and procedure. Other revisions reflect fundamental changes to RUS' operation of the grant programs and are outlined below.

For clarification purposes, RUS is defining the term ''technical assistance'' as it relates to eligibility of projects under both grant programs.

The current regulation prohibits the use of grant funds for expenses incurred prior to grant approval. This rule allows applicants to incur grant-related expenses, however, RUS would not be obligated to reimburse these expenses if the grant is not approved or is insufficient to do so.

To foster clarity, this rule includes an expanded explanation of the items needed to complete an application package and a more detailed description of the information required for priority consideration. The rule also expands the priority criteria to include the population of associations to be served, needs assessment, description of how the project will be implemented, hands-on assistance, evaluation methodology, and strategy for sustaining the project.

The existing regulation requires fidelity bond coverage. This rule removes the requirement because coverage is not needed when grant funds are reimbursed for actual expenses.

This rule requires grantees to obtain written permission from the approval official for changes in the project or changes of more than 10 percent of the total budget. Permission must be obtained before changes are put into effect or funds spent.

The rule allows grantees to submit financial statements in certain instances. The existing regulation does not offer any option other than submission of an audit.

Comments

RUS published a proposed rulemaking in the **Federal Register** on January 22, 2004, at 69 FR 3030. RUS received no comments from the public, nor did RUS receive any comments from outside federal agencies. There are three minor administrative changes in the final regulation. First, in the definition of ''State'' in § 1775.2 the words '' * * * the Western Pacific Territories, Marshall Islands, Federated States of Micronesia, Republic of Palau, * * * '' be replaced with '' * * * the Territory of Guam, the Commonwealth of the Northern Mariana Islands, the Republic of the Marshall Islands, the Federated States of Micronesia, the Republic of Palau, * * * ''.

The second change pertains to § 1775.12(a)(2), (3), and (4). The referenced paragraphs had the State Office notifying applicants not selected and the National Office notifying applicants selected for funding. In the final rule these provisions reflect that the National Office will inform the State Office of both selected and non-selected applicants and the State Office would then notify all applicants within their State of their status. Finally, RUS is adding information to § 1775.10 to provide guidance to applicants on the availability of filing electronic applications for this program through Grants.gov. The RUS feels that this additional information is considered as Internal Agency Management and pursuant to 5 U.S.C. 553, notice of proposed rule making and opportunity for comment on this issue are not required.

List of Subjects in 7 CFR Part 1775

Business and industry, Community development, Community facilities, Grant programs—housing and community development, Reporting and recordkeeping requirements, Rural areas, Waste treatment and disposal, Water supply, Watersheds.

■ For reasons set forth in the preamble, RUS amends 7 CFR chapter XVII of title 7 of the Code of Federal Regulations by revising part 1775 to read as follows:

PART 1775—TECHNICAL ASSISTANCE GRANTS

Subpart A—General Provisions

Sec.
1775.1 General.
1775.2 Definitions.
1775.3 Availability of forms and regulations.
1775.4 Allocation of funds.
1775.5 Limitations.
1775.6 Equal opportunity requirements.
1775.7 Environmental requirements.
1775.8 Other Federal Statutes.
1775.9 OMB control number.

Subpart B—Grant Application Processing

1775.10 Applications.
1775.11 Priority.
1775.12 Grant processing.
1775.13 Grant agreement.
1775.14–1775.17 [Reserved]
1775.18 Fund disbursement.
1775.19 Grant cancellation or major changes.
1775.20 Reporting.
1775.21 Audit or financial statements.
1775.22 [Reserved]
1775.23 Grant servicing.
1775.24 Delegation of authority.
1775.25–1775.30 [Reserved]

Subpart C—Technical Assistance and Training Grants

1775.31 Authorization.
1775.32 [Reserved]
1775.33 Objectives.
1775.34 Source of funds.
1775.35 Eligibility.
1775.36 Purpose.
1775.37 Allocation of funds.
1775.38–1775.60 [Reserved]

Subpart D—Solid Waste Management Grants

1775.61 Authorization.
1775.62 [Reserved]
1775.63 Objectives.

1775.64 [Reserved]
1775.65 Eligibility.
1775.66 Purpose.
1775.67 Allocation of funds.
1775.68 Exception authority.
1775.69–1775.99 [Reserved]

Authority: 5 U.S.C. 301; 7 U.S.C. 1989; 16 U.S.C. 1005.

Subpart A—General Provisions

§ 1775.1 General.

This subpart sets forth the general policies and procedures for the Technical Assistance and Training and the Solid Waste Management Grant Programs. Any processing or servicing activity conducted pursuant to this part involving authorized assistance to Rural Development employees with Water and Environmental Program responsibility, members of their families, known close relatives, or business or close personal associates, is subject to the provisions of subpart D of part 1900 of this title. Applicants for this assistance are required to identify any known relationship or association with an RUS employee.

§ 1775.2 Definitions.

The following definitions apply to subparts A through D of this part.

Association. An entity, including a small city or town, that is eligible for RUS Water and Waste Disposal financial assistance in accordance with 7 CFR 1780.7 (a).

Approval official. Any individual with administrative and legal responsibility for Rural Development programs.

DUNS Number. Data Universal Numbering System number obtained from Dun and Bradstreet and used when applying for Federal grants or cooperative agreements. A DUNS number may be obtained at no cost, by calling 1–866–705–5711.

Grant agreement. RUS Guide 1775–1. The agreement outlines the terms and conditions of the grant awards and establishes the guidelines for administering the grant awards.

Grantee. The entity or organization receiving financial assistance directly from the RUS to carry out the project or program under these programs.

Low Income. Median household income (MHI) below 100 percent of the statewide non-metropolitan median household income (SNMHI).

Regional. A multi-State area or any multi-jurisdictional area within a State.

Rural area. Any area not in a city or town with a population in excess of 10,000, according to the latest decennial census of the United States.

RUS. The Rural Utilities Service, an Agency of the United States Department of Agriculture.

Solid Waste Management. Refers to the operations, maintenance and the recycling of materials disposed of in landfills.

State. Any of the 50 States, the District of Columbia, the Commonwealth of Puerto Rico, the Territory of Guam, the Commonwealth of the Northern Mariana Islands, the Republic of the Marshall Islands, the Federated States of Micronesia, the Republic of Palau, and the U.S. Virgin Islands.

Technical Assistance. Supervision, oversight, or training by an organization for the practical solution of a problem or need of an association as defined in this section.

§ 1775.3 Availability of forms and regulations.

Information about the forms, instructions, regulations, bulletins, OMB Circulars, Treasury Circulars, standards, documents and publications cited in this part is available from any UDSA/Rural Development Office or the Rural Utilities Service, United States Department of Agriculture, Washington, DC 20250–1500.

§ 1775.4 Allocation of funds.

The National Office of the Rural Utilities Service will administer grant funds and will allocate them on a competitive basis.

§ 1775.5 Limitations.

Grant funds may not be used to:

(a) Duplicate current services or replace or substitute support normally provided by other means, such as those performed by an association's consultant in developing a project, including feasibility, design, and cost estimates.

(b) Fund political or lobbying activities.

(c) Purchase real estate or vehicles, improve or renovate office space, or repair and maintain privately owned property.

(d) Pay the costs for construction, improvement, rehabilitation, modification, or operation and maintenance of water, wastewater, and solid waste disposal facilities.

(e) Construct or furnish a building.

(f) Intervene in the Federal regulatory or adjudicatory proceedings.

(g) Sue the Federal Government or any other government entities.

(h) Pay for any other costs that are not allowable under OMB Circular A–87, OMB Circular A–110, OMB Circular A–102 or OMB Circular A–122.

(i) Make contributions or donations to others.

(j) Fund projects that duplicate technical assistance given to implement action plans under the National Forest-Dependent Rural Communities Economic Diversification Act of 1990 (7 U.S.C. 6613). Applicants cannot receive both grants made under this part and grants that the Forest Service makes to implement the action plans for five continuous years from the date of grant approval by the Forest Service.

(1) The Forest Service helps rural communities that are dependent upon national forest resources diversify existing industries and economies. It establishes rural forestry and economic diversification action teams that prepare technical assistance plans for these rural communities to expand their local economies and reduce their dependence on national forest resources. The Forest Service provides assistance to implement the action plans through grants, loans, cooperative agreements, or contracts.

(2) To avoid duplicate assistance, applicants must contact the Forest Service to find out if any geographical areas or local areas in a State have received grants for technical assistance to an economically disadvantaged community. These areas are defined as national forest-dependent communities under 7 U.S.C. 6612. Applicants will provide documentation to the Forest Service and Rural Utilities Service that they have contacted each agency.

(k) To pay an outstanding judgment obtained by the United States in a Federal Court (other than in the United States Tax Court), which has been recorded. An applicant will be ineligible to receive a loan or grant until the judgment is paid in full or otherwise satisfied.

(l) Recruit applications for the RUS's water and waste loan or any other loan or grant program. Grant funds cannot be used to create new business; however, they can be used to assist with application preparation.

§ 1775.6 Equal opportunity requirements.

The policies and regulations contained in subpart E of part 1901 of this title apply to grants made under this part.

§ 1775.7 Environmental requirements.

The policies and regulations contained in part 1794 of this title apply to grants made for the purposes in §§ 1775.36 and 1775.66.

§ 1775.8 Other Federal statutes.

Other Federal statutes and regulations are applicable to grants awarded under

this part. These include but are not limited to:

(a) 7 CFR part 1, subpart A—USDA implementation of Freedom of Information Act.

(b) 7 CFR part 3—USDA implementation of OMB Circular No. A–129 regarding debt collection.

(c) 7 CFR part 15, subpart A—USDA implementation of Title VI of the Civil Rights Act of 1964, as amended.

(d) 7 CFR part 1794, RUS Implementation of the National Environmental Policy Act.

(e) 7 CFR part 1901, subpart E—Civil Rights Compliance Requirements.

(f) 7 CFR part 3015—Uniform Federal Assistance Regulations.

(g) 7 CFR part 3016—USDA Implementation of OMB Circular Nos. A–102 and A–97, Uniform Administrative Requirements for Grants and Cooperative Agreements to State and Local Governments.

(h) 7 CFR part 3017, as amended—Government-wide Debarment and Suspension (Non-procurement); Government-wide Requirements for Drug-Free Workplace (Grants), implementing Executive Order 12549 on debarment and suspension and the Drug-Free Workplace Act of 1988 (41 U.S.C. 701).

(i) 7 CFR part 3018— Restrictions on Lobbying, prohibiting the use of appropriated funds to influence Congress or a Federal agency in connection with the making of any Federal grant and other Federal contracting and financial transactions.

(j) 7 CFR part 3019—USDA implementation of OMB Circular A–110, Uniform Administrative Requirements for Grants and Agreements With Institutions of Higher Education, Hospitals, and Other Nonprofit Organizations.

(k) 7 CFR part 3052—USDA implementation of OMB Circular No. A–133 regarding audits of institutions of higher education and other nonprofit institutions.

(l) 29 U.S.C. 794, section 504—Rehabilitation Act of 1973, and 7 CFR part 15B (USDA implementation of statute), prohibiting discrimination based upon physical or mental handicap in Federally assisted programs.

§ 1775.9 OMB control number.

The information collection requirements contained in this part have been approved by the Office of Management and Budget and have been assigned OMB control number 0572–0112.

Subpart B—Grant Application Processing

§ 1775.10 Applications.

(a) *Filing period.* Applications may be filed on or after October 1 and must be received by close of business or postmarked by midnight December 31. If an application is received either before October 1 or after December 31, the receiving office will return it to the applicant.

(b) *Where to file.* (1) An applicant will apply to the appropriate State Office of Rural Development if the project will serve a single state.

(2) An applicant will apply to the National Office if the project will serve multiple states. The application must be submitted to the following address: Assistant Administrator, Water and Environmental Programs, Rural Utilities Service, Washington, DC 20250–1570.

(3) Electronic applications will be accepted prior to the filing deadline through the Federal Government's eGrants Web site (Grants.gov) at *http://www.grants.gov.* Applicants should refer to instructions found on the Grants.gov Web site to submit an electronic application. A DUNS number and a Central Contractor Registry (CCR) registration is required prior to electronic submission. The sign-up procedures, required by Grants.gov, may take several business days to complete.

(c) *Application requirements.* To file an application, an organization must provide their DUNS number. An organization may obtain a DUNS number from Dun and Bradstreet by calling (1–866–705–5711). To file a complete application, the following information should be submitted:

(1) Standard Form 424, ''Application for Federal Assistance (For Non-Construction).''

(2) Standard Form 424A & B, ''Budget Information—Non-Construction Programs.''

(3) Form AD–1047, ''Certification Regarding Debarment, Suspension, and Other Responsibility Matters—Primary Covered Transaction.''

(4) Form AD 1049, ''Certification Regarding Drug-Free Workplace Requirements (Grants) Alternative I—For Grantees Other Than Individuals.''

(5) Form AD 1048, ''Certification Regarding Debarment.''

(6) Attachment regarding assistance provided to Rural Development Employees as required by RD Instruction 1900–D.

(7) Form RD 400–4, ''Assurance Agreement.''

(8) Form RD 400–1, ''Equal Opportunity Agreement.''

(9) Indirect Cost Rate Agreement (if applicable, applicant must include approved cost agreement rate schedule).

(10) Statement of Compliance for Title VI of the Civil Rights Act of 1964.

(11) SF LLL, ''Disclosure of Lobbying Activities'' (include only if grant is over $100,000).

(12) Certification regarding Forest Service grant.

(d) *Supporting information.* All applications shall be accompanied by:

(1) Evidence of applicant's legal existence and authority in the form of:

(i) Certified copies of current authorizing and organizational documents for new applicants or former grantees where changes were made since the last legal opinion was obtained in conjunction with receipt of an RUS grant, or, certification that no changes have been made in authorizing or organizing documents since receipt of last RUS grant by applicant.

(ii) Current annual corporation report, Certificate of Good Standing, or statement they are not required.

(iii) For public nonprofits, Certificate of Continued Status from local attorney (if applicable).

(iv) Certified list of directors/officers with their respective terms.

(2) Evidence of tax exempt status from the Internal Revenue Service (IRS), if applicable.

(3) Narrative of applicant's experience in providing services similar to those proposed. Provide brief description of successfully completed projects including the need that was identified and objectives accomplished.

(4) Latest financial information to show the applicant's financial capacity to carry out the proposed work. A current audit report is preferred, however applicants can submit a balance sheet and an income statement in lieu of an audit report.

(5) List of proposed services to be provided.

(6) Estimated breakdown of costs (direct and indirect) including those to be funded by grantee as well as other sources. Sufficient detail should be provided to permit the approval official to determine reasonableness, applicability, and allowability.

(7) Evidence that a Financial Management System is in place or proposed.

(8) Documentation on each of the priority ranking criteria listed in § 1775.11 as follows:

(i) List of the associations to be served and the State or States where assistance will be provided. Identify associations by name, or other characteristics such as size, income, location, and provide MHI and population.

(ii) Description of the type of technical assistance and/or training to be provided and the tasks to be contracted.

(iii) Description of how the project will be evaluated and provide clearly stated goals and the method proposed to measure the results that will be obtained.

(iv) Documentation of need for proposed service. Provide detailed explanation of how the proposed services differ from other similar services being provided in the same area.

(v) Personnel on staff or to be contracted to provide the service and their experience with similar projects.

(vi) Statement indicating the number of months it takes to complete the project or service.

(vii) Documentation on cost effectiveness of project. Provide the cost per association to be served or proposed cost of personnel to provide assistance.

(viii) Other factors for consideration, such as emergency situation, training need identified, health or safety problems, geographic distribution, Rural Development Office recommendations, etc.

§ 1775.11 Priority.

The application and supporting information will be used to determine the applicant's priority for available funds. All applications will be reviewed and scored for funding priority in accordance with RUS Guide 1775–2. Points will be given only for factors that are well documented in the application package and, in the opinion of the RUS, meet the objective outlined under each factor. The following is a listing of the criteria that will be used to select the applications that meet the objectives of the technical assistance program.

(a) Projects proposing to give priority for available services to rural communities having a population less than 5,500 and/or below 2,500.

(b) Projects proposing to give priority for available services to low income communities.

(c) Projects that will provide assistance in a multi-State area.

(d) Points will be awarded for work plans that clearly describe the goals and objectives of the project, how they will be accomplished in targeted communities, and what measurement of accomplishment will be used.

(e) Projects containing needs assessment (*i.e.* actual issue or problem being addressed) clearly defined and supported by data.

(f) Projects containing evaluation methods that are specific to the activity, clearly defined, measurable, and with projected outcomes.

(g) Applicants proposing to use at least 75 percent of the total grant amount for their own staff, or the staff of an affiliated organization to provide services for a project instead of contracting with an outside organization for the services.

(h) Projects providing technical assistance/training that accomplish the objective within a 12-month or less timeframe.

(i) Projects primarily providing ''hands on'' technical assistance and training, i.e., on-site assistance as opposed to preparation and distribution of printed material, to communities with existing water and waste systems which are experiencing operation and maintenance or management problems.

(j) Cash or in kind support of project from non-federal sources.

(k) Ability to demonstrate sustainability of project without Federal financial support.

§ 1775.12 Grant processing.

(a) *Single State applications.* (1) Grant applications submitted at the State level will receive a letter acknowledging receipt and confirmation that all information required for a full application was included in the packet. The State will notify the applicant of missing information. The applicant will have 14 business days to respond.

(2) The State Office will review applications for eligibility. Those applicants that are deemed ineligible will be notified. Applicants deemed eligible will be forwarded to the National Office for funding consideration.

(3) The National Office will review all applications received from State Offices. Applications will compete on a priority basis and will be scored and ranked. The applications receiving the highest scores and subject to the availability of funds will be selected for final processing. The National Office will send these applications back to the State Office for processing. The State Office will notify the applicant(s) that they have been selected for funding.

(4) Applicants not selected for funding due to low priority rating shall be notified by the State Office.

(b) *National and multi-State applications.* (1) National and multi-State applications submitted to the National Office will receive a letter acknowledging receipt and confirmation that all information required for a full application was included in the packet. The National Office shall notify the applicant of missing information. The applicant will have 14 business days to respond.

(2) The National Office will review applications for eligibility. Those applications that are deemed ineligible will be notified. Applications deemed eligible will be reviewed and given a rating score. Applications receiving the highest scores will be grouped with those received from State Offices for funding consideration.

(3) The National Office will review all applications received. Applications will compete on a priority basis and will be scored and ranked. The applications receiving the highest scores and subject to the availability of funds will be notified by the National Office that they have been selected for funding. The National Office shall conduct final processing of multi-State and national applications.

(4) Multi-State and National applicants not selected for funding due to low priority rating will be notified by the National Office.

(c) *Low priority applications.* Applications that cannot be funded in the fiscal year received will not be retained for consideration in the following fiscal year and will be handled as outlined in paragraph (a)(4) or (b)(4) of this section.

§ 1775.13 Grant agreement.

Applicants selected for funding will complete a grant agreement, RUS Guide 1775–1, which outlines the terms and conditions of the grant award.

§§ 1775.14–1775.17 [Reserved]

§ 1775.18 Fund disbursement.

Grantees will be reimbursed as follows:

(a) SF–270, ''Request for Advance or Reimbursement,'' will be completed by the grantee and submitted to either the State or National Office not more frequently than monthly.

(b) Upon receipt of a properly completed SF–270, the funds will be requested through the field office terminal system. Ordinarily, payment will be made within 30 days after receipt of a proper request for reimbursement.

(c) Grantees are encouraged to use women- and minority-owned banks (a bank which is owned at least 50 percent by women or minority group members) for the deposit and disbursement of funds.

§ 1775.19 Grant cancellation or major changes.

Any change in the scope of the project, budget adjustments of more than 10 percent of the total budget, or any other significant change in the project must be reported to and approved by the approval official by

written amendment to RUS Guide 1775–1. Any change not approved may be cause for termination of the grant.

§ 1775.20 Reporting.

(a) Grantees shall constantly monitor performance to ensure that time schedules are being met, projected work by time periods is being accomplished, and other performance objectives are being achieved.

(b) SF–269, ''Financial Status Report (short form),'' and a project performance activity report will be required of all grantees on a quarterly basis, due 30 days after the end of each calendar quarter.

(c) A final project performance report will be required with the last SF–269 due 90 days after the end of the last quarter in which the project is completed. The final report may serve as the last quarterly report.

(d) All multi-State grantees are to submit an original of each report to the National Office. Grantees serving only one State are to submit an original of each report to the State Office. The project performance reports should detail, preferably in a narrative format, activities that have transpired for the specific time period and shall include, but not be limited to, the following:

(1) A comparison of actual accomplishments to the objectives established for that period (*i.e.* number of meetings held, number of people contacted, results of activity);

(2) Analysis of challenges or setbacks that occurred during the grant period;

(3) Copies of fliers, news releases, news articles, announcements and other information used to promote services or projects;

(4) Problems, delays, or adverse conditions which will affect attainment of overall project objectives, prevent meeting time schedules or objectives, or preclude the attainment of particular project work elements during established time periods. This disclosure shall be accompanied by a statement of the action taken or planned to resolve the situation; and

(5) Activities planned for the next reporting period.

§ 1775.21 Audit or financial statements.

The grantee will provide an audit report or financial statements as follows:

(a) Grantees expending $500,000 or more Federal funds per fiscal year will submit an audit conducted in accordance with OMB Circular A–133. The audit will be submitted within 9 months after the grantee's fiscal year. Additional audits may be required if the project period covers more than one fiscal year.

(b) Grantees expending less than $500,000 will provide annual financial statements covering the grant period, consisting of the organization's statement of income and expense and balance sheet signed by an appropriate official of the organization. Financial statements will be submitted within 90 days after the grantee's fiscal year.

§ 1775.22 [Reserved]

§ 1775.23 Grant servicing.

Grants will be serviced in accordance with RUS Guide 1775–1 and subpart E of part 1951 of this title. When grants are terminated for cause, 7 CFR part 11 will be followed.

§ 1775.24 Delegation of authority.

The authority under this part is re-delegated to the Assistant Administrator, Water and Environmental Programs, except for the discretionary authority contained in § 1775.34 and § 1775.68. The Assistant Administrator, Water and Environmental Programs may re-delegate the authority in this part.

§§ 1775.25—1775.30 [Reserved]

Subpart C—Technical Assistance and Training Grants

§ 1775.31 Authorization.

This subpart sets forth additional policies and procedures for making Technical Assistance and Training (TAT) grants authorized under Section 306(a)(14)(A) of the Consolidated Farm and Rural Development Act (CONACT) (7 U.S.C. 1921 *et seq.*, as amended.

§ 1775.32 [Reserved]

§ 1775.33 Objectives.

The objectives of the program are to:

(a) Identify and evaluate solutions to water and waste problems in rural areas.

(b) Assist applicants in preparing applications for water and waste disposal loans/grants.

(c) Assist associations in improving operation and maintenance of existing water and waste facilities in rural areas.

§ 1775.34 Source of funds.

Grants will be made from not less than 1 percent or not more than 3 percent of any appropriations for grants under Section 306(a)(2) of the CONACT. Funds not obligated by September 1 of each fiscal year will be used for water and waste disposal grants made in accordance with part 1780 of this chapter.

§ 1775.35 Eligibility.

(a) Entities eligible for grants must be private nonprofit organizations with tax exempt status, designated by the Internal Revenue Service. A nonprofit organization is defined as any corporation, trust, association, cooperative, or other organization that:

(1) Is operated primarily for scientific, education, service, charitable, or similar purposes in the public interest.

(2) Is not organized primarily for profit.

(3) Uses its net proceeds to maintain, improve, and/or expand its operations.

(b) Entities must be legally established and located within a state as defined in § 1775.2.

(c) Organizations must be incorporated by December 31 of the year the application period occurs to be eligible for funds.

(d) Private businesses, Federal agencies, public bodies, and individuals are ineligible for these grants.

(e) Applicants must also have the proven ability, background, experience (as evidenced by the organization's satisfactory completion of project(s) similar to those proposed), legal authority, and actual capacity to provide technical assistance and/or training on a regional basis to associations as provided in § 1775.33. To meet the requirement of actual capacity, an applicant must either:

(1) Have the necessary resources to provide technical assistance and/or training to associations in rural areas through its staff, or

(2) Be assisted by an affiliate or member organization which has such background and experience and which agrees, in writing, that it will provide the assistance, or

(3) Contract with a nonaffiliated organization for not more than 49 percent of the grant to provide the proposed assistance.

§ 1775.36 Purpose.

Grants may be made to organizations as defined in § 1775.35 to enable such organizations to assist associations to:

(a) Identify and evaluate solutions to water problems of associations in rural areas relating to source, storage, treatment, and/or distribution.

(b) Identify and evaluate solutions to waste problems of associations in rural areas relating to collection, treatment, and/or disposal.

(c) Prepare water and/or waste disposal loan/grant applications.

(d) Provide technical assistance/training to association personnel that will improve the management, operation, and maintenance of water and waste facilities.

(e) Pay the expenses associated with providing the technical assistance and/or training authorized in paragraphs (a) through (d) of this section.

§ 1775.37 Allocation of funds.

At least 10 percent of available funds will be used for funding single State projects based on the priority criteria.

§§ 1775.38–1775.60 [Reserved]

Subpart D—Solid Waste Management Grants

§ 1775.61 Authorization.

This subpart sets forth the policies and procedures for making Solid Waste Management (SWM) grants authorized under section 310B of the CONACT.

§ 1775.62 [Reserved]

§ 1775.63 Objectives.

The objectives of the program are to:

(a) Reduce or eliminate pollution of water resources, and

(b) Improve planning and management of solid waste sites.

§ 1775.64 [Reserved]

§ 1775.65 Eligibility.

(a) Entities eligible for grants must be either:

(1) Private nonprofit organizations with tax exempt status designated by the Internal Revenue Service. A nonprofit organization is defined as any corporation, trust, association, cooperative, or other organization that:

(i) Is operated primarily for scientific, education, service, charitable, or similar purposes in the public interest.

(ii) Is not organized primarily for profit.

(iii) Uses its net proceeds to maintain, improve, and/or expand its operations.

(2) Public bodies.

(3) Federally acknowledged or State-recognized Native American tribe or group.

(4) Academic institutions.

(b) Entities must be legally established and located within a state as defined in § 1775.2.

(c) Organizations must be incorporated by December 31 of the year the application period occurs to be eligible for funds.

(d) Private businesses, Federal agencies, and individuals are ineligible for these grants.

(e) Applicants must also have the proven ability; background; experience, as evidenced by the organization's satisfactory completion of project(s) similar to those proposed; legal authority; and actual capacity to provide technical assistance and/or training on a regional basis to associations as provided in § 1775.63. To meet the requirement of actual capacity, an applicant must either:

(1) Have the necessary resources to provide technical assistance and/or training to associations in rural areas through its staff, or

(2) Be assisted by an affiliate or member organization which has such background and experience and which agrees, in writing, that it will provide the assistance, or

(3) Contract with a nonaffiliated organization for not more than 49 percent of the grant to provide the proposed assistance.

§ 1775.66 Purpose.

Grants may be made to organizations as defined in § 1775.65 to enable such organizations to assist associations to:

(a) Provide technical assistance and/or training to reduce the solid waste stream through reduction, recycling, and reuse.

(b) Provide training to enhance operator skills in maintaining and operating active landfills.

(c) Provide technical assistance and/or training for operators of landfills which are closed or will be closed in the near future with the development/implementation of closure plans, future land use plans, safety and maintenance planning, and closure scheduling within permit requirements.

(d) Evaluate current landfill conditions to determine the threats to water resources.

(e) Pay the expenses associated with providing the technical assistance and/or training authorized in paragraphs (a) through (d) of this section.

§ 1775.67 Allocation of funds.

The maximum amount for a single applicant for a Solid Waste Management project will be 25 percent of available grant funds.

§ 1775.68 Exception authority.

The Administrator may, in individual cases, make an exception to any requirement or provision of this part which is not inconsistent with the authorizing statute or other applicable law and is determined to be in the Government's interest.

§§ 1775.69–1775.99 [Reserved]

Dated: November 24, 2004.

Hilda Gay Legg,

Administrator, Rural Utilities Service.

[FR Doc. 04–26948 Filed 12–7–04; 8:45 am]

BILLING CODE 3410–15–P

DEPARTMENT OF AGRICULTURE

Rural Housing Service

Rural Business—Cooperative Service

Rural Utilities Service

Farm Service Agency

7 CFR Part 1951

RIN 0575–AC57

Servicing of Delinquent Community and Business Programs Loans—Workout Agreements

AGENCY: Rural Housing Service, USDA.

ACTION: Final rule.

SUMMARY: The Rural Housing Service (RHS) hereby amends the regulation utilized to service the Community Facilities and Business Programs loan program by adding requirements for servicing delinquent Community Facilities in conformance with the Debt Collection Improvement Act of 1996. The intended effect of this action is to establish a workout agreement with delinquent borrowers to collect delinquent loans prior to referral for treasury offset.

DATES: This rule is effective January 7, 2005.

FOR FURTHER INFORMATION CONTACT: Dan Spieldenner, Community Programs Senior Loan Specialist, Rural Housing Service, U.S. Department of Agriculture, STOP 0787, 1400 Independence Ave. SW., Washington, DC 20250–0787, telephone: (202) 720–9700.

SUPPLEMENTARY INFORMATION:

Classification

This rule has been determined to be not significant for the purposes of Executive Order 12866 and, therefore, has not been reviewed by the Office of Management and Budget (OMB).

Programs Affected

The Catalog of Federal Domestic Assistance Program impacted by this action is 10.766, Community Facilities Loans and Grants.

Intergovernmental Review

This program is subject to the provisions of Executive Order 12372, which requires intergovernmental consultation with State and local officials. RHS conducts intergovernmental consultations for each loan in the manner delineated in 7 CFR part 3015, subpart V.

Civil Justice Reform

This rule has been reviewed under Executive Order 12988, Civil Justice Reform. In accordance with this rule: (1) All State and local laws and regulations that are in conflict with this rule will be preempted; (2) no retroactive effect will be given to this rule; and (3) administrative proceedings of the National Appeals Division (7 CFR part 11) must be exhausted before bringing suit in court challenging action taken under this rule.

Environmental Impact Statement

The action has been reviewed in accordance with 7 CFR part 1940, subpart G, ''Environmental Program.'' The Agency has determined that this action does not constitute a major Federal action significantly affecting the quality of the human environment and, in accordance with the National Environmental Policy Act of 1969, 42 U.S.C. 4321 *et seq.*, an Environmental Impact Statement is not required.

Unfunded Mandates Reform Act

Title II of the Unfunded Mandates Reform Act of 1995 (UMRA), 2 U.S.C. chapters 17A and 25, established requirements for Federal agencies to assess the effects of their regulatory actions on State, local, and tribal governments and the private sector. Under section 202 of the UMRA, RHS generally must prepare a written statement, including a cost-benefit analysis, for proposed and final rules with Federal mandates that may result in expenditures to State, local, or tribal governments, in the aggregate, or to the private sector, of $100 million or more in any 1 year. When such a statement is needed for a rule, section 205 of the UMRA generally requires RHS to identify and consider a reasonable number of regulatory alternatives and adopt the least costly, most cost-effective, or least burdensome alternative that achieves the objectives of the rule. This rule contains no Federal mandates (under the regulatory provisions of title II of the UMRA) for State, local, and tribal governments or the private sector. Therefore, this rule is not subject to the requirements of sections 202 and 205 of the UMRA.

Regulatory Flexibility Act

This rule has been reviewed with regard to the requirements of the Regulatory Flexibility Act (5 U.S.C. 601–612). The undersigned has determined and certified by signature of this document that this rule will not have a significant economic impact on a substantial number of small entities since this rulemaking action does not involve a new or expanded program.

Federalism

The policies contained in this rule do not have any substantial direct effect on States, on the relationship between the national government and the States, or on the distribution of power and responsibilities among the various levels of government. Nor does this rule impose substantial direct compliance costs on State and local governments. Therefore, consultation with the States is not required.

Implementation

It is the policy of this Department that rules relating to public property, loans, grants, benefits, or contracts shall comply with 5 U.S.C. 553, notwithstanding the exemption of that section with respect to such rules.

Paperwork Reduction Act

The information collection and record keeping requirements contained in this regulation have been approved by the Office of Management and Budget (OMB) under the provisions of 44 U.S.C. chapter 35 and were assigned OMB control number 0575–0066 in accordance with the Paperwork Reduction Act of 1995. Under the Paperwork Reduction Act of 1995, no person is required to respond to a collection of information unless it displays a valid OMB control number. The revisions in this rulemaking for part 1951 required an amendment to the burden package and this modification has been approved by OMB.

Discussion

The proposed rule was published in the **Federal Register** on April 30, 2004 (69 FR 23697), for public comment. We received no comments on the proposed rule. The Debt Collection Improvement Act of 1996 requires transfer of accounts that are more than 180 days delinquent to the Department of Treasury for collection by offset of Federal payments unless a suitable agreement for collection of the delinquent amount is negotiated between the borrower and the federal agency. This change to regulation establishes requirements for negotiation of a ''Workout Agreement'' and the reporting requirements that are necessary to monitor the borrower's progress in resolving the delinquency. It also incorporates some administrative corrections. There are no substantive changes from the notice of proposed rulemaking.

List of Subjects in 7 CFR Part 1951

Accounting servicing, Grant programs—Housing and community development, Reporting requirements, Rural areas.

■ Therefore, Chapter XVIII, Title 7, Code of Federal Regulations, is amended as follows:

PART 1951—SERVICING AND COLLECTIONS

■ 1. The authority citation for part 1951 continues to read as follows:

Authority: 5 U.S.C. 301; 7 U.S.C. 1932; 7 U.S.C. 1989; 31 U.S.C. 3716; 42 U.S.C. 1480.

Subpart E—Servicing of Community and Direct Business Programs Loans and Grants

■ 2. Section 1951.203 is amended by revising paragraph (a) to read as follows:

§ 1951.203 Definitions.

(a) *Approval official.* An official who has been delegated loan and/or grant approval authorities within applicable programs.

* * * * *

■ 3. Section 1951.222 is amended by revising paragraph (a)(1) to read as follows:

§ 1951.222 Subordination of security.

* * * * *

(a) * * *

(1) The request must be for subordination of a specific amount of the Rural Development indebtedness.

* * * * *

§ 1951.226 [Amended]

4. Section 1951.226 is amended in paragraph (b)(4)(ii) by revising the word ''below'' to read ''of this subpart.''

§ 1951.230 [Amended]

■ 5. Section 1951.230 is amended in paragraph (f)(2) by revising the words ''Form FmHA or its successor agency under Public Law 103–354 442–46'' to read ''an Agency approved form''.

■ 6. Section 1951.242 is added to read as follows:

§ 1951.242 Servicing delinquent Community Facility loans.

(a) For the purpose of this section, a loan is delinquent when a borrower fails to make all or part of a payment by the due date.

(b) The delinquent loan borrower and the Agency, at its discretion, may enter into a written workout agreement.

(c) For loans that are delinquent, the borrower must provide, monthly comparative financial statements in a format that is acceptable to the Agency

by the 15th day of the following month. The Agency may waive this requirement if it would cause a hardship for the borrower or the borrower is actively marketing the security property.

§ 1951.250 [Amended]

■ 7. Section 1951.250 is amended by removing the last sentence.

Dated: December 1, 2004.

Russell T. Davis,

Administrator, Rural Housing Service.

[FR Doc. 04–26872 Filed 12–7–04; 8:45 am]

BILLING CODE 3410–XV–P

DEPARTMENT OF TRANSPORTATION

Federal Aviation Administration

14 CFR Part 23

[Docket No. CE210; Special Conditions No. 23–153–SC]

Special Conditions: AMSAFE, Incorporated, Sky International A1, A1A, A1B, Inflatable Five-Point Seatbelt Airbag Restraint

AGENCY: Federal Aviation Administration (FAA), DOT.

ACTION: Final special conditions.

SUMMARY: These special conditions are issued for an AMSAFE, Inc. Inflatable Five-Point Seatbelt Airbag Restraint on Sky International models A1, A1A, and A1B. These airplanes, as modified by AMSAFE, Inc. will have novel and unusual design features associated with the upper-torso restraint portions of the 5-point safety belt, which contains an integrated airbag device. The applicable airworthiness regulations do not contain adequate or appropriate safety standards for this design feature. These special conditions contain the additional safety standards the Administrator considers necessary to establish a level of safety equivalent to that established by the existing airworthiness standards.

DATES: *Effective Date:* The effective date of these special conditions is November 24, 2004.

FOR FURTHER INFORMATION CONTACT: Mr. Pat Mullen, Federal Aviation Administration, Aircraft Certification Service, Small Airplane Directorate, ACE–111, 901 Locust, Kansas City, Missouri, 816–329–4128, fax 816–329–4090, e-mail: *pat.mullen@faa.gov.*

SUPPLEMENTARY INFORMATION:

Background

On January 15, 2004, AMSAFE, Inc. Aviation Inflatable Restraints Division, 1043 North 47th Avenue, Phoenix, AZ 85043, applied for a supplemental type certificate for the installation of a five-point safety belt restraint system incorporating an inflatable airbag for the pilot and co-pilot seats of the Sky International model A1, A1A, and A1B airplanes. Models A1, A1A, and A1B are single engine, two-place airplanes, arranged in a tandem configuration.

The inflatable restraint system is a five-point safety belt restraint system consisting of a lapbelt and dual shoulder harnesses. An inflatable airbag is attached to one of the shoulder harnesses, and the other shoulder harness is of conventional construction. The inflatable portion of the restraint system will rely on sensors to electronically activate the inflator for deployment. The inflatable restraint system will be installed on both the pilot and co-pilot seats.

In the event of an emergency landing, the airbag will inflate and provide a protective cushion between the occupant's head and structure within the airplane cockpit. This will reduce the potential for head and torso injury. The inflatable restraint behaves in a manner that is similar to an automotive airbag, but in this case, the airbag is integrated into one of the shoulder harnesses. While airbags and inflatable restraints are standard in the automotive industry, the use of an inflatable five-point restraint system is novel for general aviation operations.

The FAA has determined that this project will be accomplished on the basis of providing the same current level of safety of the Sky International A1, A1A, and A1B occupant restraint systems. The FAA has two primary safety concerns with the installation of airbags or inflatable restraints:

- That they perform properly under foreseeable operating conditions; and
- That they do not perform in a manner or at such times to impede the pilot's ability to maintain control of the airplane or constitute a hazard to the airplane or occupants.

The latter point has the potential to be the more rigorous of the requirements. An unexpected deployment while conducting the takeoff or landing phases of flight may result in an unsafe condition. The unexpected deployment may either startle the pilot, or generate a force sufficient to cause a sudden movement of the control stick. Either action could result in a loss of control of the airplane, the consequences of which are magnified due to the low operating altitudes during these phases of flight. The FAA has considered this when establishing the special conditions.

The inflatable restraint system relies on sensors to electronically activate the inflator for deployment. These sensors could be susceptible to inadvertent activation, causing deployment in a potentially unsafe manner. The consequences of an inadvertent deployment must be considered in establishing the reliability of the system. AMSAFE, Inc. must show that the effects of an inadvertent deployment in flight are not a hazard to the airplane or that an inadvertent deployment is extremely improbable. In addition, any general aviation aircraft can generate a large amount of cumulative wear and tear on a restraint system. It is likely that the potential for inadvertent deployment increases as a result of this cumulative damage. Therefore, the impact of wear and tear on inadvertent deployment must be considered. Due to the effects of this cumulative damage, a life limit must be established for the appropriate system components in the restraint system design.

There are additional factors to be considered to minimize the chances of inadvertent deployment. General aviation airplanes are exposed to a unique operating environment, since the same airplane may be used by both experienced and student pilots. The effect of this environment on inadvertent deployment must be understood. Therefore, qualification testing of the firing hardware/software must consider the following:

- The airplane vibration levels appropriate for a general aviation airplane; and
- The inertial loads that result from typical flight or ground maneuvers, including gusts and hard landings.

Any tendency for the firing mechanism to activate as a result of these loads or acceleration levels is unacceptable.

Other influences on inadvertent deployment include high intensity electromagnetic fields (HIRF) and lightning. Since the sensors that trigger deployment are electronic, they must be protected from the effects of these threats. To comply with HIRF and lightning requirements, the AMSAFE, Inc. inflatable restraint system is considered a critical system, since its inadvertent deployment could have a hazardous effect on the airplane.

Given the level of safety of the current Sky International A1, A1A, and A1B occupant restraints, the inflatable restraint system must show that it will offer an equivalent level of protection in the event of an emergency landing. In the event of an inadvertent deployment, the restraint must still be at least as strong as a Technical Standard Order certificated belt and dual shoulder harnesses. There is no requirement for

the inflatable portion of the restraint to offer protection during multiple impacts, where more than one impact would require protection.

The inflatable restraint system must deploy and provide protection for each occupant under a crash condition where it is necessary to prevent serious head injury. The seats of the models A1, A1A, and A1B are not certificated to the requirements of § 23.562, and it is not known if they would remain intact following exposure to the crash pulse identified in § 23.562. Therefore, the test crash pulse used to satisfy this requirement may have a peak longitudinal deceleration lower than that required by § 23.562. However, the test pulse onset rate (deceleration divided by time) must be equal to or greater than the onset rate of the pulse described in § 23.562. This will demonstrate that the crash sensor will trigger when exposed to a rapidly applied deceleration, like an actual crash event.

It is possible a wide range of occupants will use the inflatable restraint. Thus, the protection offered by this restraint should be effective for occupants that range from the fifth percentile female to the ninety-fifth percentile male. Energy absorption must be performed in a consistent manner for this occupant range.

In support of this operational capability, there must be a means to verify the integrity of this system before each flight. As an option, AMSAFE, Inc. can establish inspection intervals where they have demonstrated the system to be reliable between these intervals.

It is possible that an inflatable restraint will be ''armed'' even though no occupant is using the seat. While there will be means to verify the integrity of the system before flight, it is also prudent to require that unoccupied seats with active restraints not constitute a hazard to any occupant. This will protect any individual performing maintenance inside the cockpit while the aircraft is on the ground.

In addition, the design must prevent the inflatable seatbelt from being incorrectly buckled and/or installed such that the airbag would not properly deploy. As an alternative, AMSAFE, Inc. may show that such deployment is not hazardous to the occupant, and will still provide the required protection.

The cockpits of the models A1, A1A, and A1B are confined areas, and the FAA is concerned that noxious gasses may accumulate in the event of restraint deployment. When deployment does occur, either by design or inadvertently, there must not be a release of hazardous quantities of gas or particulate matter into the cockpit.

An inflatable restraint should not increase the risk already associated with fire. Therefore, the inflatable restraint should be protected from the effects of fire, so that an additional hazard is not created by, for example, a rupture of the inflator.

Finally, the airbag is likely to have a large volume displacement, and possibly impede the egress of an occupant. Since the bag deflates to absorb energy, it is likely that the inflatable restraint would be deflated at the time an occupant would attempt egress. However, it is appropriate to specify a time interval after which the inflatable restraint may not impede rapid egress. Ten seconds has been chosen as reasonable time. This time limit will offer a level of protection throughout the impact event.

Type Certification Basis

Under the provisions of § 21.101, AMSAFE, Inc. must show that the Sky International models A1, A1A, and A1B, as changed, continue to meet the applicable provisions of the regulations incorporated by reference in Type Certificate No. A22NM or the applicable regulations in effect on the date of application for the change. The regulations incorporated by reference in the type certificate are commonly referred to as the ''original type certification basis.'' The regulations incorporated by reference in Type Certificate No. A22NM are as follows:

Part 23 of the Federal Aviation Regulations dated February 1, 1965, as amended by 23–1 through 23–31 (normal category) and FAR 36 amended through 36–12.

FAR 21 amended through 21–57.

For the models listed above, the certification basis also includes all exemptions, if any; equivalent level of safety findings, if any; and the special conditions adopted by this rulemaking action.

The Administrator has determined that the applicable airworthiness regulations (*i.e.*, part 23 as amended) do not contain adequate or appropriate safety standards for the AMSAFE, Inc. inflatable restraint as installed on these Sky International models because of a novel or unusual design feature. Therefore, special conditions are prescribed under the provisions of § 21.16.

Special conditions, as appropriate, as defined in § 11.19, are issued in accordance with § 11.38, and become part of the type certification basis in accordance with § 21.101.

Special conditions are initially applicable to the model for which they are issued. Should the applicant apply for a supplemental type certificate to modify any other model included on the same type certificate to incorporate the same novel or unusual design feature, the special conditions would also apply to that model under the provisions of § 21.101.

Novel or Unusual Design Features

The Sky International models A1, A1A, and A1B will incorporate the following novel or unusual design feature:

The AMSAFE, Inc. Five-Point Safety Belt Restraint System incorporating an inflatable airbag for the pilot and co-pilot seats. The purpose of the airbag is to reduce the potential for injury in the event of an accident. In a severe impact, an airbag will deploy from one shoulder harness, in a manner similar to an automotive airbag. The airbag will deploy between the head of the occupant and cockpit structure. This will, therefore, provide some protection to the head of the occupant. The restraint will rely on sensors to electronically activate the inflator for deployment.

The Code of Federal Regulations state performance criteria for seats and restraints in an objective manner. However, none of these criteria are adequate to address the specific issues raised concerning inflatable restraints. Therefore, the FAA has determined that, in addition to the requirements of part 21 and part 23, special conditions are needed to address the installation of this inflatable restraint.

Accordingly, these special conditions are adopted for the models A1, A1A, and A1B equipped with the AMSAFE, Inc. five-point inflatable restraint. Other conditions may be developed, as needed, based on further FAA review and discussions with the manufacturer and civil aviation authorities.

Discussion of Comments

Notice of No. 23–04–01–SC for the AMSAFE, Inc. Inflatable Five-Point Seatbelt Airbag Restraint on Sky International models A1, A1A, and A1B airplanes was published in the **Federal Register** on September 14, 2004, 69FR55367. No comments were received, and the special conditions are adopted as proposed.

Applicability

As discussed above, these special conditions are applicable to the Sky International models A1, A1A, and A1B equipped with the AMSAFE, Inc. five-point inflatable restraint system. Should

AMSAFE, Inc. apply at a later date for a supplemental type certificate to modify any other model on Type Certificate number A22NM to incorporate the same novel or unusual design feature, the special conditions would apply to that model as well under the provisions of § 21.101.

For Final Special Conditions Effective Upon Issuance

Under standard practice, the effective date of final special conditions would be 30 days after the date of publication in the **Federal Register**; however, as the certification date for the AMSAFE, Inc. Inflatable Five-Point Seatbelt Airbag Restraint on Sky International models A1, A1A, and A1B is imminent, the FAA finds that good cause exists to make these special conditions effective upon issuance.

Conclusion

This action affects only certain novel or unusual design features on the Sky International models A1, A1A, and A1B. It is not a rule of general applicability, and it affects only the applicant who applied to the FAA for approval of these features on the airplane.

List of Subjects in 14 CFR Part 23

Aircraft, Aviation safety, Signs and symbols.

Citation

The authority citation for these special conditions is as follows:

Authority: 49 U.S.C. 106(g), 40113 and 44701; 14 CFR 21.16 and 21.101 for STC; and 14 CFR 11.38 and 11.19.

The Special Conditions

Accordingly, pursuant to the authority delegated to me by the Administrator, the following special conditions are issued as part of the type certification basis for the Sky International models A1, A1A, as modified by AMSAFE, Inc. *Five-Point Safety Belt Restraint System Incorporating an Inflatable Airbag for the Pilot and Co-pilot Seats of the Sky International models A1, A1A, and A1B.*

1. It must be shown that the inflatable lapbelt will deploy and provide protection under crash conditions where it is necessary to prevent serious head injuries. Compliance will be demonstrated using the deceleration pulse specified in § 23.562, which may be modified as follows:

a. The peak longitudinal deceleration may be reduced, however the onset rate of the deceleration must be equal to or greater than the crash pulse identified in § 23.562.

b. The peak longitudinal deceleration must be above the deployment threshold of the crash sensor, and equal to or greater than the forward static design longitudinal load factor required by the original certification basis of the airplane.

The means of protection must take into consideration a range of stature from a 5th percentile female to a 95th percentile male. The inflatable restraint must provide a consistent approach to energy absorption throughout that range.

2. The inflatable restraint must provide adequate protection for each occupant. In addition, unoccupied seats that have an active restraint must not constitute a hazard to any occupant.

3. The design must prevent the inflatable restraint from being incorrectly buckled and/or incorrectly installed such that the airbag would not properly deploy. Alternatively, it must be shown that such deployment is not hazardous to the occupant and will provide the required protection.

4. It must be shown that the inflatable restraint system is not susceptible to inadvertent deployment as a result of wear and tear or the inertial loads resulting from in-flight or ground maneuvers (including gusts and hard landings) that are likely to be experienced in service.

5. It must be shown (or be extremely improbable) that an inadvertent deployment of the restraint system during the most critical part of the flight does not impede the pilot's ability to maintain control of the airplane or cause an unsafe condition (or hazard to the airplane). In addition, a deployed inflatable restraint must be at least as strong as a Technical Standard Order (C114) 5-point harness.

6. It must be shown that deployment of the inflatable restraint system is not hazardous to the occupant or result in injuries that could impede rapid egress. This assessment should include occupants whose restraint is loosely fastened.

7. It must be shown that an inadvertent deployment that could cause injury to a standing or sitting person is improbable.

8. It must be shown that the inflatable restraint will not impede rapid egress of the occupants 10 seconds after its deployment.

9. For the purposes of complying with HIRF and lightning requirements, the inflatable restraint system is considered a critical system since its deployment could have a hazardous effect on the airplane.

10. It must be shown that the inflatable restraints will not release hazardous quantities of gas or particulate matter into the cabin.

11. The inflatable restraint system installation must be protected from the effects of fire such that no hazard to occupants will result.

12. There must be a means to verify the integrity of the inflatable restraint activation system prior to each flight or it must be demonstrated to reliably operate between inspection intervals.

13. A life limit must be established for appropriate system components.

14. Qualification testing of the internal firing mechanism must be performed at vibration levels appropriate for a general aviation airplane.

Issued in Kansas City, Missouri on November 24, 2004.

James E. Jackson,

Acting Manager, Small Airplane Directorate, Aircraft Certification Services.

[FR Doc. 04–26979 Filed 12–7–04; 8:45 am]

BILLING CODE 4910–13–P

DEPARTMENT OF TRANSPORTATION

Federal Aviation Administration

14 CFR Part 73

[Docket No. FAA–2004–19438; Airspace Docket No. 04–ASO–9]

RIN 2120–AA66

Amendment to Restricted Areas 2932, 2933, 2934, and 2935; Cape Canaveral, FL

AGENCY: Federal Aviation Administration (FAA), DOT.

ACTION: Final rule, correction.

SUMMARY: This action corrects a final rule published in the **Federal Register** on November 23, 2004 (69 FR 68075). In that rule, the effective date was inadvertently published as January 20, 2004. The correct effective date is January 20, 2005. This action corrects that error.

DATES: Effective 0901 UTC, January 20, 2005.

FOR FURTHER INFORMATION CONTACT: Paul Gallant, Airspace and Rules, Office of System Operations and Safety, Federal Aviation Administration, 800 Independence Avenue, SW., Washington, DC 20591; telephone: (202) 267–8783.

SUPPLEMENTARY INFORMATION: On November 23, 2004, Airspace Docket No. 04–ASO–9 (69 FR 68075), was published amending Restricted Areas 2932, 2933, 2934, and 2935, Cape Canaveral, FL. In that rule, the effective date was inadvertently published as January 20, 2004. The correct effective

date is January 20, 2005. This action corrects that error.

Correction to Final Rule

■ Accordingly, pursuant to the authority delegated to me, the effective date for Airspace Docket No. 04–ASO–9, as published in the **Federal Register** on November 23,2004 (69 FR 68075), is corrected as follows:

■ On page 68075, correct the effective date to read January 20, 2005.

Issued in Washington, DC, on December 2, 2004.

Reginald C. Matthews,

Manager, Airspace and Rules.

[FR Doc. 04–26978 Filed 12–7–04; 8:45 am]

BILLING CODE 4910–13–P

DEPARTMENT OF STATE

22 CFR Parts 122 and 129

[Public Notice 4920]

RIN 1400–AB97

Amendment to the International Traffic in Arms Regulations: Registration Fee Change

AGENCY: Department of State.

ACTION: Interim rule and request for comments.

SUMMARY: This rule amends the International Traffic in Arms Regulations (ITAR) (22 CFR parts 122 and 129) by increasing the registration fees, changing the registration renewal period, and making other minor administrative changes.

DATES: *Effective Date:* This interim rule takes effect on December 8, 2004. Comment Date: The Department will accept written comments, which must be received no later than January 7, 2005.

ADDRESSES: Interested parties are invited to submit written comments to the Department of State, Directorate of Defense Trade Controls, Office of Defense Trade Controls Management, ATTN: ITAR Regulatory Change, 22 CFR parts 122 and 129, 13th Floor, SA–1, Washington, DC 20522–0112. E-mail comments may be sent to *DTCPResponseTeam@state.gov* with the subject line: ITAR Regulatory Change, 22 CFR parts 122 and 129. Persons with access to the Internet may also view this notice by going to the regulations.gov Web site at: *http://www.regulations.gov.*

FOR FURTHER INFORMATION CONTACT: David Trimble, Directorate of Defense Trade Controls Compliance, Bureau of Political-Military Affairs, Department of State (202) 663–2807 or FAX (202) 261–8199. ATTN: ITAR Regulatory Change, 22 CFR part 122 and part 129.

SUPPLEMENTARY INFORMATION: This interim rule increases the fee charged to those persons required to register with the U.S. State Department, Directorate of Defense Trade Controls in accordance with Section 38 of the Arms Export Control Act (AECA) (22 U.S.C. 2778). ITAR registration fees are set forth at 22 CFR 122.3 and have not been adjusted since 1997. Registration fees (including 4-year renewals) received (or postmarked) prior to the effective date of this amendment will be honored under the previous fee rates. Also, this amendment changes the maximum registration period from up to four years to two years.

This amendment revises 22 CFR 122.2(a) and 122.3(a) and 129.4(a) to reference Form DS–2032 (Statement of Registration), in lieu of Form DSP–9 as the applicable form for registration purposes. The amendment to 22 CFR 122.2(a) also reflects that the State Department will notify the registrant if the Registration Statement package is incomplete, but will no longer return incomplete materials to the sender. 22 CFR 122.2(c) is amended by removing its reference to 22 CFR 60.2(c) because that provision no longer exists.

This amendment revises 22 CFR 122.3(a) to change the maximum registration period to two years from four years. In addition, this amendment removes 22 CFR 122.3(c). The State Department will no longer provide fee refunds to registrants that cease to engage in the manufacture or export of defense articles and defense services.

Regulatory Analysis and Notices

This amendment is made in accordance to the following regulations:

Administrative Procedure Act: The Department's implementation of this regulation as an interim rule with request for comments is based upon the ''good cause'' exceptions found at 5 U.S.C. 553(b)(B) and (d)(3). The Department has determined that notice and public procedure thereon in advance of the effective date are impracticable and contrary to the public interest as the fees are needed immediately to fund regulatory efforts to help ensure terrorist entities and state sponsors of terrorism do not gain access to exported U.S. defense articles and services. Further, the funds are vital to controlling sensitive weapons and defense technology needed to protect the national security interests of the United States.

Regulatory Flexibility Act: The Department, in accordance with the Regulatory Flexibility Act (5 U.S.C. 605(b)), has reviewed this regulation and, by approving it, certifies that this rule will not have a significant economic impact on a substantial number of small entities.

Unfunded Mandated Reform Act of 1995: This rule will not result in the expenditure by State, local and tribal governments, in the aggregate, or by the private sector, of $100 million or more in any year and it will not significantly or uniquely affect small governments. Therefore, no actions were deemed necessary under the provisions of the Unfunded Mandates Reform Act of 1995.

Small Business Regulatory Enforcement Act of 1996: This rule is not a major rule as defined by section 804 of the Small Business Regulatory Enforcement Act of 1996. This rule will not result in an annual effect on the economy of $100 million or more; a major increase in costs or prices; or significant adverse effects on competition, employment, investment, productivity, innovation, or on the ability of United States-based companies to compete with foreign-based companies in domestic and export markets.

Executive Order 12866: The Department of State does not consider this rule to be a ''significant regulatory action'' under Executive Order 12866, section 3(f), Regulatory Planning and Review. In addition, the Department is exempt from Executive Order 12866 except to the extent that it is promulgating regulations in conjunction with a domestic agency that are significant regulatory actions. The Department has nevertheless reviewed the regulation to ensure its consistency with the regulatory philosophy and principles set forth in the Executive Order.

Executive Order 12988, Civil Justice Reform: The Department has reviewed this regulation in light of sections 3(a) and 3(b)(2) of Executive Order No. 12988 to eliminate ambiguity, minimize litigation, establish clear legal standards, and reduce burden.

Executive Order 13132: This regulation will not have substantial direct effects on the States, the relationship between the National Government and the States, or on the distribution of power and responsibilities among the various levels of government. Therefore, it is determined that this rule does not have sufficient federalism implications to require consultations or warrant the preparation of a federalism summary impact statement.

Executive Order 12372: This regulation does not require review

under Executive Order 12372, Intergovernmental Review of Federal Programs.

Paperwork Reduction Act: This rule does not impose any new reporting or recordkeeping requirements subject to the Paperwork Reduction Act, 44 U.S.C. chapter 35. Form DS–2032, which the rule references, bears OMB Approval No. 1405–0002 and is currently approved for use through July 31, 2005.

List of Subjects

22 CFR Part 122

Arms and munitions, Exports.

22 CFR Part 129

Arms and munitions, Exports, Technical assistance.

■ Accordingly, for the reasons set forth above, title 22, chapter I, subchapter M, parts 122 and 129 are amended as follows:

PART 122—REGISTRATION OF MANUFACTURERS AND EXPORTERS

■ 1. The authority citation for part 122 continues to read as follows:

Authority: Secs. 2 and 38, Pub. L. 90–629, 90 Stat. 744 (22 U.S.C. 2752, 2778); E.O. 11958, 42 FR 4311, 1977 Comp. p. 79; 22 U.S.C. 2658.

■ 2. Section 122.2 is amended to revise paragraphs (a) and (c) to read as follows:

§ 122.2 Submission of registration statement.

(a) *General.* The Department of State Form DS–2032 (Statement of Registration) and the transmittal letter required by paragraph (b) of this section must be submitted by an intended registrant with a payment (by check or money order) payable to the Department of State of one of the fees prescribed in § 122.3(a) of this subchapter. Checks and money orders must be in U.S. currency, and checks must be payable through a U.S. financial institution. In addition, the Statement of Registration and transmittal letter must be signed by a senior officer who has been empowered by the intended registrant to sign such documents. The intended registrant also shall submit documentation that demonstrates that it is incorporated or otherwise authorized to do business in the United States. The Directorate of Defense Trade Controls will notify the registrant if the Statement of Registration package is incomplete.

(b) * * *

(c) *Definition.* For purpose of this section, *ownership* means that more than 50 percent of the outstanding voting securities of the firm are owned by one or more foreign persons. *Control* means that one or more foreign persons have the authority or ability to establish or direct the general policies or day-to-day operations of the firm. Control is presumed to exist where foreign persons own 25 percent or more of the outstanding voting securities if no U.S. persons control an equal or larger percentage.

■ 3. Section 122.3 is amended to revise paragraph (a) and remove paragraph (c) to read as follows:

§ 122.3 Registration fees.

(a) A person who is required to register may do so for a period up to 2 years upon submission of a completed Form DS–2032, transmittal letter, and payment of a fee as follows:

1 year	$1,750.00
2 years	$3,500.00

* * * * *

PART 129—REGISTRATION AND LICENSING OF BROKERS

■ 4. The authority citation for part 129 continues to read as follows:

Authority: Sec. 38, Pub. L. 104–164, 110 Stat. 1437, (22 U.S.C. 2778).

■ 5. Section 129.4 is amended to revise paragraph (a) to read as follows:

§ 129.4 Registration statement and fees.

(a) *General.* The Department of State Form DS–2032 (Statement of Registration) and a transmittal letter meeting the requirements of § 122.2(b) of this subchapter must be submitted by an intended registrant with a payment by check or money order payable to the Department of State of one of the fees prescribed in § 122.3(a) of this subchapter. The Statement of Registration and transmittal letter must be signed by a senior officer who has been empowered by the intended registrant to sign such documents. The intended registrant also shall submit documentation that demonstrates that it is incorporated or otherwise authorized to do business in the United States.

* * * * *

Dated: November 1, 2004.

John R. Bolton,

Under Secretary, Arms Control and International Security, Department of State.

[FR Doc. 04–26954 Filed 12–7–04; 8:45 am]

BILLING CODE 4710–25–P

DEPARTMENT OF THE TREASURY

Alcohol and Tobacco Tax and Trade Bureau

27 CFR Part 9

[TTB T.D.–19; Re: Notice No. 17]

RIN: 1513–AA75

Establishment of the Southern Oregon Viticultural Area (2002R–338P)

AGENCY: Alcohol and Tobacco Tax and Trade Bureau (TTB), Treasury.

ACTION: Final rule; Treasury decision.

SUMMARY: This Treasury decision establishes the Southern Oregon viticultural area in portions of Douglas, Jackson, and Josephine Counties in southwestern Oregon. The established Applegate Valley, Rogue Valley, and Umpqua Valley viticultural areas are within boundaries of the Southern Oregon viticultural area. We designate viticultural areas to allow vintners to better describe the origin of their wines and to allow consumers to better identify wines they may purchase.

DATES: This rule is effective February 7, 2005.

FOR FURTHER INFORMATION CONTACT: N.A. Sutton, Program Manager, Regulations and Procedures Division, Alcohol and Tobacco Tax and Trade Bureau, 925 Lakeville St., #158, Petaluma, CA 94952; telephone 415–271–1254.

SUPPLEMENTARY INFORMATION:

Background on Viticultural Areas

TTB Authority

Section 105(e) of the Federal Alcohol Administration Act (the FAA Act, 27 U.S.C. 201 *et seq.*) requires that alcohol beverage labels provide the consumer with adequate information regarding a product's identity and prohibits the use of misleading information on such labels. The FAA Act also authorizes the Secretary of the Treasury to issue regulations to carry out its provisions. The Alcohol and Tobacco Tax and Trade Bureau (TTB) administers these regulations.

Part 4 of the TTB regulations (27 CFR part 4) allows the establishment of definitive viticultural areas and the use of their names as appellations of origin on wine labels and in wine advertisements. Part 9 of the TTB regulations (27 CFR part 9) contains the list of approved viticultural areas.

Definition

Section 4.25(e)(1)(i) of the TTB regulations (27 CFR 4.25(e)(1)(i)) defines a viticultural area for American wine as

a delimited grape-growing region distinguishable by geographical features, the boundaries of which have been recognized and defined in part 9 of the regulations. These designations allow vintners and consumers to attribute a given quality, reputation, or other characteristic of a wine made from grapes grown in an area to its geographic origin. The establishment of viticultural areas allows vintners to describe more accurately the origin of their wines to consumers and helps consumers to identify wines they may purchase. Establishment of a viticultural area is neither an approval nor an endorsement by TTB of the wine produced in that area.

Requirements

Section 4.25(e)(2) of the TTB regulations outlines the procedure for proposing an American viticultural area and provides that any interested party may petition TTB to establish a grape-growing region as a viticultural area. Section 9.3(b) of the TTB regulations requires the petition to include—

- Evidence that the proposed viticultural area is locally and/or nationally known by the name specified in the petition;
- Historical or current evidence that supports setting the boundary of the proposed viticultural area as the petition specifies;
- Evidence relating to the geographical features, such as climate, soils, elevation, and physical features, that distinguish the proposed viticultural area from surrounding areas;
- A description of the specific boundary of the proposed viticultural area, based on features found on United States Geological Survey (USGS) maps; and
- A copy of the appropriate USGS map(s) with the proposed viticultural area's boundary prominently marked.

Southern Oregon Petition

General Background

In 2002, we received a petition from H. Earl Jones, a winemaker, and Dr. Gregory V. Jones, an associate professor of geography, requesting establishment of the ''Southern Oregon'' viticultural area. Located between the Coast Range and the Cascade Mountains, the Southern Oregon viticultural area covers portions of Douglas, Jackson, and Josephine Counties in southwestern Oregon. Beginning about 25 miles south of Eugene, the boundary area extends 125 miles south to the Oregon-California border. At its widest point the viticultural area is about 60 miles across.

The Southern Oregon viticultural area's boundary encompasses approximately 2,001,430 acres and includes the communities of Sutherlin, Roseburg, Grants Pass, Medford, and Ashland, Oregon. There are approximately 120 vineyards, with more than 3,000 acres planted to a wide range of vinifera grapes, and 17 commercial wineries within the area as of the 2002 petition filing. Both warm and cool climate wine grape varietals are successfully grown in the region.

The Southern Oregon viticultural area encompasses the established Umpqua Valley (27 CFR 9.89) and Rogue Valley (27 CFR 9.132) viticultural areas. A third established viticultural area, Applegate Valley (27 CFR 9.165), is entirely within the Rogue Valley area. TTB emphasizes that the boundaries and name usage of these three viticultural areas are not affected by the approval of the larger, encompassing Southern Oregon viticultural area.

The Southern Oregon viticultural area contains a series of high intermountain valleys that share a warm, sunny, arid climate and contain old, complex soils derived from bedrock. The warm Southern Oregon viticultural area is distinguishable from the cooler Willamette Valley to the north, the Pacific coastal regions to the west, and the region east of the Cascade Mountains.

Below, we summarize the information and evidence presented in the 2002 Southern Oregon petition.

Viticultural History

Historically, grapes have been grown in the Southern Oregon viticultural area since 1852, when Peter Britt operated a winery in Jacksonville, Oregon, that produced wine for local miners. Shortly thereafter, Jesse Applegate planted 1,200 grape vines in Umpqua, Oregon.

Modern day viticulture began in 1959, when Richard Summers founded Hillcrest Vineyard and produced 230 gallons of Riesling. The early 1970s saw the establishment of vineyards in the Umpqua and Rogue valleys by the Henry Estate Winery, Girardet Wine Cellars, and the Valley View Winery. Wine grape plantings have increased to 3,000 acres.

Name Evidence

The Encyclopedia of Oregon defines ''Southern Oregon'' as ''extending from the Calapooya Mountains southward to the [California] State line between the Cascades and the Coast Range.'' Geographical references to Southern Oregon are found in multiple business page listings in the telephone books of Douglas, Jackson, and Josephine Counties. East of the Southern Oregon boundary area, the Klamath Falls and Lakeview community telephone books indicate that that region is known as Central Oregon. The American Automobile Association map of Oregon labels the regions surrounding the Southern Oregon area as the Willamette Valley (north), the Cascade Range (east), the State of California (south), and the Coast Range (west), which meets the Pacific Ocean to define the Oregon coastline.

Wine industry publications, including the Wine Business Monthly and Northwest Palate magazines, refer to wine grape production in Jackson, Josephine, and Douglas Counties as ''Southern Oregon.'' Wine industry members in the area believe that a ''Southern Oregon'' appellation will have more relevance to consumers since it accurately describes the origin of the area's wines and helps distinguish them from Oregon's Willamette Valley wines, which are significantly different.

Boundary Evidence

The Southern Oregon viticultural area boundaries are based on a combination of climate, terrain, and soil factors that contrast with the nearby Willamette Valley, the Pacific coastal area, and Eastern Oregon region. The boundaries encompass three established viticultural areas (Umpqua Valley, Rogue Valley, and Applegate Valley) and a connecting valley corridor of similar viticultural potential. The boundaries of the three viticultural areas are well established and clearly documented in 27 CFR part 9, and there will be no changes to their boundaries.

The 12- by 17-mile north-south corridor in Douglas County connecting the Umpqua Valley and Rogue Valley viticultural areas has the same physical features as the viticultural areas to its north and south. A series of township and range lines, as noted on USGS maps, define the boundaries of the connecting corridor, which is roughly centered on Interstate 5 between the communities of Canyonville and Glendale Junction.

Distinguishing Features

Topography

The Southern Oregon area contains a varied, mountainous topography with vineyards typically situated in high mountain valleys. The Coast Range, in particular the Klamaths, forms a natural barrier to the west. This high mountain range barrier prevents marine air from freely moving inland to the Southern Oregon viticultural area. It also casts a

rain shadow on the south and east regions of the Southern Oregon area.

To the north, a gap in the Coast Range allows cooling Pacific maritime air to flow into the Willamette Valley viticultural area. This contrast becomes more apparent as one travels south from the cooler, lower-elevation Willamette Valley into the warmer, higher elevations of the Southern Oregon area. Many vineyards in the Umpqua Valley are above 1,000 feet in elevation, and those to the south in the Rogue Valley are typically at elevations of 1,200 feet to 2,000 feet.

Soils

The Southern Oregon viticultural area soils evolved slowly from ancient rock formations, predominantly from the 200 million year-old Klamath Mountains. These ancient mountains, which extend from California to the latitude of Roseburg, Oregon, are comprised of sedimentary rock. Over time, a slow and complex geologic process crushed, metamorphosed, and modified these rock formations.

The old geology and soils of the Southern Oregon viticultural area generally contrast with that of the surrounding regions beyond the area's boundaries. To the north, the Willamette Valley has a more recent geologic history. Formed 25 million years ago as an extension of the Pacific Ocean, or perhaps as multiple interconnected bays, the Willamette Valley gradually filled with sediments and occasional basalt lava flows. The glacial Lake Missoula floods also deposited silts and sediments in the valley. To the west, the Pacific coastal zone's soils are more highly weathered and consist of a mix of soils from earlier volcanoes and oceanic crust terrains. To the east, the Cascade Mountains are comprised of mostly young volcanic soils, and beyond the Cascades are the arid desert and prairie soils of Eastern Oregon.

Temperature

The Southern Oregon viticultural area has the warmest growing conditions in the state of Oregon, thus allowing for the practice of ''warm climate viticulture.'' This warm growing climate impacts the grape varietals grown, quality, and harvest dates. Also, growers use cooler microclimates within the Southern Oregon area to produce some ''cool climate'' wine grape varietals.

The table below shows the growing season temperatures in and around the Southern Oregon area.

Region and relationship to Southern Oregon	Annual average growing season degree-days	Annual average growing temperature
Southern Oregon viticultural area	2,508	61 °F
Oregon Coast (west)	1,369	56 °F
Willamette Valley (north)	2,034	59 °F
Eastern Oregon (east)	1,625	55.5 °F

The Southern Oregon area climate is comparatively warmer and drier than the Willamette Valley to the north. Harvest may start 10 days earlier in Southern Oregon for identical varieties, such as Pinot Noir and Pinot Gris. The coastal region, despite having the longest growing season, does not accumulate enough heat to ripen most grape varieties. It also has high rainfall amounts that subject grapes to mildew and botrytis. Finally, the Eastern Oregon region has a cooler and shorter growing season climate due to its elevation and distance from the Pacific Ocean. The cold winters east of the Cascade Range leave vines vulnerable to frost kill, and the short growing season is insufficient to ripen fruit.

Rainfall

The Southern Oregon viticultural area receives significantly less rainfall than the coastal region to its west and the Willamette Valley to its north. Annual rainfall averages 35 inches in the Rogue Valley and 32 inches in the Umpqua Valley. By comparison, the Coast Range, and Willamette Valley, average 77 and 47 inches of annual rainfall, respectively, while eastern Oregon averages 20 inches of annual precipitation.

Boundary Description

See the narrative boundary description of the viticultural area in the regulatory text published at the end of this notice.

Maps

The petitioner(s) provided the required maps, and we list them below in the regulatory text.

Notice of Proposed Rulemaking and TTB Finding

TTB published a notice of proposed rulemaking on the establishment of the Southern Oregon viticultural area in the September 18, 2003, **Federal Register** as Notice No. 17 (68 FR 54696). In that notice, we requested comments from all interested persons by November 17, 2003. We received 13 comments in response to Notice No. 17. All commenters supported the establishment of the Southern Oregon viticultural area, with most emphasizing the area's distinct climatic and geographic features.

After careful review, TTB finds that the evidence submitted with the petition supports the establishment of the proposed viticultural area. Therefore, under the authority of the Federal Alcohol Administration Act and part 4 of our regulations, we establish the ''Southern Oregon'' viticultural area in Douglas, Jackson, and Josephine Counties, Oregon, effective 60-days from this document's publication date.

Impact on Current Wine Labels

Part 4 of the TTB regulations prohibits any label reference on a wine that indicates or implies an origin other than the wine's true place of origin. With the establishment of this viticultural area and its inclusion in part 9 of the TTB regulations, its name, ''Southern Oregon,'' is recognized as a name of viticultural significance. Consequently, wine bottlers using ''Southern Oregon'' in a brand name, including a trademark, or in another label reference as to the origin of the wine, must ensure that the product is eligible to use the viticultural area's name as an appellation of origin.

For a wine to be eligible to use as an appellation of origin the name of a viticultural area specified in part 9 of the TTB regulations, at least 85 percent of the grapes used to make the wine must have been grown within the area represented by that name, and the wine must meet the other conditions listed in 27 CFR 4.25(e)(3). If the wine is not eligible to use the viticultural area name as an appellation of origin and that name appears in the brand name, then the label is not in compliance and the bottler must change the brand name and obtain approval of a new label. Similarly, if the viticultural area name appears in another reference on the label in a misleading manner, the bottler would have to obtain approval of a new label.

Different rules apply if a wine has a brand name containing a viticultural area name that was used as a brand name on a label approved before July 7, 1986. *See* 27 CFR 4.39(i)(2) for details.

Regulatory Analyses and Notices

Regulatory Flexibility Act

We certify that this regulation will not have a significant economic impact on a substantial number of small entities. This regulation imposes no new reporting, recordkeeping, or other administrative requirement. Any benefit derived from the use of a viticultural

area name is the result of a proprietor's efforts and consumer acceptance of wines from that area. Therefore, no regulatory flexibility analysis is required.

Executive Order 12866

This rule is not a significant regulatory action as defined by Executive Order 12866 (58 FR 51735). Therefore, it requires no regulatory assessment.

Drafting Information

N.A. Sutton of the Regulations and Procedures Division drafted this document.

List of Subjects in 27 CFR Part 9

Wine.

The Final Rule

■ For the reasons discussed in the preamble, we amend 27 CFR, chapter 1, part 9 as follows:

PART 9—AMERICAN VITICULTURAL AREAS

■ 1. The authority citation for part 9 continues to read as follows:

Authority: 27 U.S.C. 205.

Subpart C—Approved American Viticultural Areas

■ 2. Subpart C is amended by adding § 9.179 to read as follows:

§ 9.179 Southern Oregon.

(a) *Name.* The name of the viticultural area described in this section is ''Southern Oregon''.

(b) *Approved maps.* The appropriate maps for determining the boundary of the Southern Oregon viticultural area are two 1:250,000 scale, USGS topography maps. They are titled:

(1) Roseburg, Oregon—1958, revised 1970; and

(2) Medford, Oregon; California—1955, revised 1976.

(c) *Boundary.* The Southern Oregon viticultural area is located entirely within Douglas, Jackson, and Josephine Counties, Oregon. The beginning point is on the Roseburg map at the intersection of Interstate Highway 5 and the Douglas-Lane County line, T21S, R4W.

(1) From the beginning point, proceed north along the Douglas-Lane County line approximately 0.5 miles to the 1,000-foot contour line; then

(2) Proceed northwest along the 1,000-foot contour line to the Douglas-Lane County line; then west along the County line approximately 2.5 miles, returning to the 1,000-foot contour line; then in a generally westerly direction along the 1,000-foot contour line to its first intersection with the R9W–R10W range line; then

(3) Proceed along the 1,000-foot contour line, crossing the R9W–R10W range line four more times; then proceed south along the R9W–R10W range line approximately 2.75 miles to the center of the Umpqua River; then along a straight line in an easterly direction approximately 6.25 miles to the intersection of range line R8W–R9W with the center of the Umpqua River; then south along range line R8W–R9W approximately 3.5 miles to its intersection with township line T22S–T23S; then

(4) Proceed southeast approximately 8.5 miles along a straight line to the intersection of township line T23S–T24S with range line R7W–R8W; then south along the R7W–R8W range line approximately 8 miles to its intersection with the 1,000-foot contour line; then in a southeasterly direction in a straight line approximately 3.5 miles toward the intersection of township line T25S–T26S with range line R6W–R7W, but stopping short at the 1,000-foot contour line; then

(5) Proceed in a southerly direction along the 1,000-foot contour line to the intersection of township line T27S–T28S with range line R7W–R8W; then in a southwesterly direction in a straight line approximately 3.5 miles toward the intersection of township line T28S–T29S with range line R8W–R9W, but stopping short and returning to the 1,000-foot contour line near the center of T28S, R8W; then generally south along the 1,000-foot contour line to its intersection with township line T29S–T30S; then

(6) Proceed east along township line T29S–T30S approximately 0.33 mile, rejoining the 1,000-foot contour line; then in a northerly and eventually a southerly direction along the 1,000-foot contour line, passing onto the Medford map, and past the town of Riddle to range line R6W–R7W; then south along the R6W–R7W range line approximately 15 miles to the Josephine-Douglas County line; then in a general northeasterly direction along the County line to its intersection with Interstate 5 approximately 1.3 miles south of Cow Creek ; then

(7) Proceed southerly and southwesterly along southbound Interstate 5 to its junction with Wolf Creek and then north about 500 feet to the Southern Pacific Railway line; then westerly and southerly out of the town of Wolf Creek along the Southern Pacific Railway line to the rail line's intersection with Hugo Road at the town of Hugo; then southwesterly along Hugo Road to the point where Hugo Road crosses Jumpoff Joe Creek; then westerly and downstream along that creek to the intersection of Jumpoff Joe Creek and the Rogue River; then

(8) Proceed northwesterly and downstream along the Rogue River to the first point where the Wild and Scenic Rogue River designated area touches the easterly boundary of the Siskiyou National Forest, just south of Galice; then

(9) Proceed in a generally southwesterly direction (with many diversions) along the easterly border of the Siskiyou National Forest to the 42 degree 0 minute north latitude line; then easterly along the latitude line to the point where the Siskiyou National Forest boundary again crosses into Oregon, approximately 1 mile east of U.S. Highway 199; then

(10) Proceed in a generally northeasterly direction and then in a southeasterly direction (with many diversions) along the northern boundary of the Siskiyou National Forest to the point where the Siskiyou National Forest touches the Rogue River National Forest at Big Sugarloaf Peak; then

(11) Proceed in a generally easterly direction (with many diversions) along the northern border of the Rogue River National Forest to the point where the Rogue River National Forest intersects with Slide Creek approximately 6 miles southeast of Ashland; then

(12) Proceed southeasterly and northeasterly along Slide Creek to the point where the creek intersects State Route 273; then northwesterly along State Route 273 to the point where it intersects State Highway 66; then proceed in an easterly direction approximately 5 miles along State Route 66 to the east line of T39S, R2E; then

(13) Proceed north along the east line of T39S, R2E to the northeast corner of T39S, R2E; then westerly approximately 5 miles along the north line of T39S, R2E, to the 2,600 foot contour line; then in a northerly direction following the 2,600 foot counter line across Walker Creek and then in a southwesterly direction to the point where the 2,600 foot contour line touches the east line of T38S, R1E; then

(14) Proceed northerly along the east line of T38S, R1E, to the northeast corner of T38S, R1E; then

(15) Proceed westerly along the north line of T38S, R1E, to the northwest corner of T38S, R1E; then

(16) Proceed northerly along the west line of T37S, R1E, to the northwest corner of T37S, R1E; then

(17) Proceed easterly along the north lines of T37S, R1E, and T37S, R2E, to the southeast corner of T36S, R2E; then

(18) Proceed northerly along the east line of T36S, R2E, to the northeast corner of T36S, R2E; then

(19) Proceed westerly along the north line of T36S, R2E, to the northwest comer of T36S, R2E; then

(20) Proceed northerly along the east line of T35S, R1E, to the northeast comer of T35S, R1E; then

(21) Proceed westerly along the north line of T35S, R1E, to the northwest corner of T35S, R1E; then

(22) Proceed northerly along the east line of T34S, R1W, to the northeast corner of T34S, R1W; then

(23) Proceed westerly along the common boundary line of T34S–T33S to the northwest corner of T34S, R5W; then

(24) Proceed northerly along the west line of T33S, R5W, to the Josephine-Douglas County line; thence in a generally east, northeasterly direction along the county line to the intersection of R3W–R4W range line; thence north along the R3W–R4W range line approximately 11.8 miles to the 1,000-foot contour line just south of State Route 227 southeast of the town of Days Creek; then

(25) Proceed in an easterly, westerly, and eventually northerly along the 1,000-foot contour line, crossing to the Roseburg map from the Medford map, to a point approximately 3.5 miles east of Dillard, where the contour line crosses Interstate 5 on the Roseburg map; thence northeast along Interstate 5 approximately 0.25 mile, returning to the 1,000-foot contour line; thence in a generally northeasterly, southeasterly, northwesterly, and eventually northeasterly along the 1,000-foot contour line past the town of Idleyld Park to the R2W–R3W range line; then

(26) Proceed north along range line R2W–R3W approximately 1.75 miles to the T25S–T26S township line; thence west along township line T25S–T26S approximately .25 mile, returning to the 1,000-foot contour line; thence in a generally westerly and then a northerly direction along the 1,000-foot contour line toward the valley of Calapooya Creek to the R3W–R4W range line; thence north along range line R3W–R4W approximately 2.25 miles, back to the 1,000-foot contour line; then

(27) Proceed in a westerly and then a northerly direction along the 1,000-foot contour line to the T23S–T24S township line, then east along the T23S–T24S township line approximately 2.75 miles to the 1,000-foot contour line; then in a northerly direction along the 1,000-foot contour line to its intersection with the Douglas-Lane County line; thence north along the county line approximately 0.75 mile to the beginning point.

Signed: November 1, 2004.

Arthur J. Libertucci,

Administrator.

Dated: November 29, 2004.

Timothy E. Skud,

Deputy Assistant Secretary (Tax, Trade, and Tariff Policy).

[FR Doc. 04–26865 Filed 12–7–04; 8:45 am]

BILLING CODE 4810–31–P

ENVIRONMENTAL PROTECTION AGENCY

40 CFR Part 52

[R03–OAR–2004–PA–0003; FRL–7845–3]

Approval and Promulgation of Air Quality Implementation Plans; Pennsylvania; VOC Requirements for Portable Fuel Containers

AGENCY: Environmental Protection Agency (EPA).

ACTION: Direct final rule.

SUMMARY: EPA is taking direct final action to approve revisions to the Pennsylvania State Implementation Plan (SIP). The revisions pertain to new requirements to control volatile organic compound (VOC) emissions from portable fuel containers. EPA is approving these revisions in accordance with the requirements of the Clean Air Act (CAA).

DATES: This rule is effective on February 7, 2005 without further notice, unless EPA receives adverse written comment by January 7, 2005. If EPA receives such comments, it will publish a timely withdrawal of the direct final rule in the **Federal Register** and inform the public that the rule will not take effect.

ADDRESSES: Submit your comments, identified by Regional Material in EDocket (RME) ID Number R03–OAR–2004–PA–0003 by one of the following methods:

A. Federal eRulemaking Portal: *http://www.regulations.gov*. Follow the on-line instructions for submitting comments.

B. Agency Web site: *http://www.docket.epa.gov/rmepub/* RME, EPA's electronic public docket and comment system, is EPA's preferred method for receiving comments. Follow the on-line instructions for submitting comments.

C. E-mail: *morris.makeba@epa.gov.*

D. Mail: R03–OAR–2004–PA–0003, Makeba Morris, Chief, Air Quality Planning Branch, Mailcode 3AP21, U.S. Environmental Protection Agency, Region III, 1650 Arch Street, Philadelphia, Pennsylvania 19103.

E. Hand Delivery: At the previously-listed EPA Region III address. Such deliveries are only accepted during the Docket's normal hours of operation, and special arrangements should be made for deliveries of boxed information.

Instructions: Direct your comments to RME ID No. R03–OAR–2004–PA–0003. EPA's policy is that all comments received will be included in the public docket without change, and may be made available online at *http://www.docket.epa.gov/rmepub/*, including any personal information provided, unless the comment includes information claimed to be Confidential Business Information (CBI) or other information whose disclosure is restricted by statute. Do not submit information that you consider to be CBI or otherwise protected through RME, *regulations.gov* or e-mail. The EPA RME and the Federal *regulations.gov* websites are an ''anonymous access'' system, which means EPA will not know your identity or contact information unless you provide it in the body of your comment. If you send an e-mail comment directly to EPA without going through RME or *regulations.gov*, your e-mail address will be automatically captured and included as part of the comment that is placed in the public docket and made available on the Internet. If you submit an electronic comment, EPA recommends that you include your name and other contact information in the body of your comment and with any disk or CD–ROM you submit. If EPA cannot read your comment due to technical difficulties and cannot contact you for clarification, EPA may not be able to consider your comment. Electronic files should avoid the use of special characters, any form of encryption, and be free of any defects or viruses.

Docket: All documents in the electronic docket are listed in the RME index at *http://www.docket.epa.gov/rmepub/*. Although listed in the index, some information is not publicly available, *i.e.*, CBI or other information whose disclosure is restricted by statute. Certain other material, such as copyrighted material, is not placed on the Internet and will be publicly available only in hard copy form. Publicly available docket materials are available either electronically in RME or in hard copy during normal business hours at the Air Protection Division, U.S. Environmental Protection Agency, Region III, 1650 Arch Street, Philadelphia, Pennsylvania 19103. Copies of material to be incorporated by reference are available at the Air and

Radiation Docket and Information Center, U.S. Environmental Protection Agency, 1301 Constitution Avenue, NW., Room B108, Washington, DC 20460. Copies of the State submittal are available at the Pennsylvania Department of Environmental Protection, Bureau of Air Quality, P.O. Box 8468, 400 Market Street, Harrisburg, Pennsylvania 17105.

FOR FURTHER INFORMATION CONTACT: Cristina Fernandez at(215) 814–2178, or by e-mail at *fernandez.cristina@epa.gov*.

SUPPLEMENTARY INFORMATION:

I. Background

In December 1999, EPA identified emission reduction shortfalls in several severe 1-hour ozone nonattainment areas, including those located in the Ozone Transport Region (OTR). States were required to address the shortfalls in those areas. The Ozone Transport Commission (OTC) developed model rules to reduce VOCs for a number of source categories. One of the model rules is to reduce VOC emissions from portable fuel containers. The OTC model rules are based on existing rules developed by the California Air Resources Board (CARB), which were analyzed and modified by OTC-formed workgroups to address emission reduction needs in the OTR. Adoption and implementation of these model rules by the OTR member states is intended to attain and maintain the 1-hour ozone standard and reduce 8-hour ozone levels.

II. Summary of SIP Revision

On March 26, 2003, the Pennsylvania Department of Environmental Protection (PADEP) submitted a formal revision to its SIP. The SIP revision consists of new regulation Chapter 130, Subchapter A. Portable Fuel Containers, Sections 130.101 through 130.108. This regulation applies statewide to any person who sells, supplies, offers for sale, or manufactures for sale portable fuel containers and/or spill-proof fill spouts for use in Pennsylvania on or after January 1, 2003.

This regulation requires each portable fuel container and/or spill-proof fill spout to meet the following requirements: (1) Have an automatic shut-off to prevent overfill during refueling, (2) have automatic closing and sealing of the container and/or spout when not dispensing fuel, (3) have only one opening for both filling and pouring, (4) have a minimum flow rate and fill level, (5) meet a permeation standard, (6) have a manufacturer's warranty against defects, and (7) clearly display a label with the date of manufacture and identifying the container and/or spout as a spill proof system. Also included in the regulation are provisions for exemptions, innovative procedures, administrative requirements, variances, and compliance testing procedures.

III. Final Action

EPA is approving a revision to the Pennsylvania SIP that adds new regulation Chapter 130, Subchapter A. Portable Fuel Containers, Sections 130.101 through 130.108 to reduce VOC emissions from portable fuel containers as a SIP strengthening measure. Implementation of this rule will result in statewide emission reductions, and will help the Philadelphia-Wilmington-Trenton nonattainment area to attain the 1-hour ozone standard.

EPA is publishing this rule without prior proposal because the Agency views this as a noncontroversial amendment and anticipates no adverse comment. However, in the ''Proposed Rules'' section of today's **Federal Register**, EPA is publishing a separate document that will serve as the proposal to approve the SIP revision if adverse comments are filed. This rule will be effective on February 7, 2005 without further notice unless EPA receives adverse comment by January 7, 2005. If EPA receives adverse comment, EPA will publish a timely withdrawal in the **Federal Register** informing the public that the rule will not take effect. EPA will address all public comments in a subsequent final rule based on the proposed rule. EPA will not institute a second comment period on this action. Any parties interested in commenting must do so at this time.

IV. Statutory and Executive Order Reviews

A. General Requirements

Under Executive Order 12866 (58 FR 51735, October 4, 1993), this action is not a ''significant regulatory action'' and therefore is not subject to review by the Office of Management and Budget. For this reason, this action is also not subject to Executive Order 13211, ''Actions Concerning Regulations That Significantly Affect Energy Supply, Distribution, or Use'' (66 FR 28355, May 22, 2001). This action merely approves state law as meeting Federal requirements and imposes no additional requirements beyond those imposed by state law. Accordingly, the Administrator certifies that this rule will not have a significant economic impact on a substantial number of small entities under the Regulatory Flexibility Act (5 U.S.C. 601 *et seq.*). Because this rule approves pre-existing requirements under state law and does not impose any additional enforceable duty beyond that required by State law, it does not contain any unfunded mandate or significantly or uniquely affect small governments, as described in the Unfunded Mandates Reform Act of 1995 (Public Law 104–4). This rule also does not have tribal implications because it will not have a substantial direct effect on one or more Indian tribes, on the relationship between the Federal Government and Indian tribes, or on the distribution of power and responsibilities between the Federal Government and Indian tribes, as specified by Executive Order 13175 (65 FR 67249, November 9, 2000). This action also does not have federalism implications because it does not have substantial direct effects on the States, on the relationship between the national government and the States, or on the distribution of power and responsibilities among the various levels of government, as specified in Executive Order 13132 (64 FR 43255, August 10, 1999). This action merely approves a state rule implementing a Federal standard, and does not alter the relationship or the distribution of power and responsibilities established in the Clean Air Act. This rule also is not subject to Executive Order 13045 ''Protection of Children from Environmental Health Risks and Safety Risks'' (62 FR 19885, April 23, 1997), because it is not economically significant.

In reviewing SIP submissions, EPA's role is to approve State choices, provided that they meet the criteria of the Clean Air Act. In this context, in the absence of a prior existing requirement for the State to use voluntary consensus standards (VCS), EPA has no authority to disapprove a SIP submission for failure to use VCS. It would thus be inconsistent with applicable law for EPA, when it reviews a SIP submission, to use VCS in place of a SIP submission that otherwise satisfies the provisions of the Clean Air Act. Thus, the requirements of section 12(d) of the National Technology Transfer and Advancement Act of 1995 (15 U.S.C. 272 note) do not apply. This rule does not impose an information collection burden under the provisions of the Paperwork Reduction Act of 1995 (44 U.S.C. 3501 *et seq.*).

B. Submission to Congress and the Comptroller General

The Congressional Review Act, 5 U.S.C. 801 *et seq.*, as added by the Small Business Regulatory Enforcement Fairness Act of 1996, generally provides

that before a rule may take effect, the agency promulgating the rule must submit a rule report, which includes a copy of the rule, to each House of the Congress and to the Comptroller General of the United States. EPA will submit a report containing this rule and other required information to the U.S. Senate, the U.S. House of Representatives, and the Comptroller General of the United States prior to publication of the rule in the **Federal Register**. This rule is not a ''major rule'' as defined by 5 U.S.C. 804(2).

C. Petitions for Judicial Review

Under section 307(b)(1) of the Clean Air Act, petitions for judicial review of this action must be filed in the United States Court of Appeals for the appropriate circuit by February 7, 2005. Filing a petition for reconsideration by the Administrator of this final rule does not affect the finality of this rule for the purposes of judicial review nor does it extend the time within which a petition for judicial review may be filed, and shall not postpone the effectiveness of such rule or action. This action to approve the Pennsylvania control requirements for portable fuel containers may not be challenged later in proceedings to enforce its requirements. (*See* section 307(b)(2).)

List of Subjects in 40 CFR Part 52

Environmental protection, Air pollution control, Incorporation by reference, Ozone, Reporting and recordkeeping requirements, Volatile organic compounds.

Dated: November 24, 2004.

Donald S. Welsh,

Regional Administrator, Region III.

■ 40 CFR part 52 is amended as follows:

PART 52—[AMENDED]

■ 1. The authority citation for part 52 continues to read as follows:

Authority: 42 U.S.C. 7401 *et seq.*

Subpart NN—Pennsylvania

■ 2. Section 52.2020 is amended by adding paragraph (c)(229) to read as follows:

§ 52.2020 Identification of plan.

* * * * *

(c) * * *

(229) Revisions to the Pennsylvania Regulations, Chapter 130, Subchapter A pertaining to volatile organic compound control requirements for portable fuel containers submitted on March 26, 2003 by the Pennsylvania Department of Environmental Protection.

(i) Incorporation by reference.

(A) Letter of March 26, 2003 from the Pennsylvania Department of Environmental Protection transmitting the Pennsylvania regulations for portable fuel containers.

(B) 25 Pa Code Chapter 130 Subchapter A. Portable Fuel Containers, Sections 130.101–130.108, inclusive, effective on October 5, 2002.

(ii) Additional Material. Remainder of the State submittal pertaining to the revisions listed in paragraph (c)(229)(i) of this section.

[FR Doc. 04–26941 Filed 12–7–04; 8:45 am]

BILLING CODE 6560–50–P

ENVIRONMENTAL PROTECTION AGENCY

40 CFR Part 52

[R03–OAR–2004–PA–0004; FRL–7845–1]

Approval and Promulgation of Air Quality Implementation Plans; Pennsylvania; VOC Requirements for Consumer Products

AGENCY: Environmental Protection Agency (EPA).

ACTION: Direct final rule.

SUMMARY: EPA is taking direct final action to approve revisions to the Pennsylvania State Implementation Plan (SIP). The revisions pertain to new control requirements to reduce volatile organic compounds (VOCs) from consumer products. EPA is approving these revisions in accordance with the requirements of the Clean Air Act (CAA).

DATES: This rule is effective on February 7, 2005 without further notice, unless EPA receives adverse written comment by January 7, 2005. If EPA receives such comments, it will publish a timely withdrawal of the direct final rule in the **Federal Register** and inform the public that the rule will not take effect.

ADDRESSES: Submit your comments, identified by Regional Material in EDocket (RME) ID Number R03–OAR–2004–PA–0004 by one of the following methods:

A. Federal eRulemaking Portal: *http://www.regulations.gov*. Follow the on-line instructions for submitting comments.

B. Agency Web site: *http://www.docket.epa.gov/rmepub/* RME, EPA's electronic public docket and comment system, is EPA's preferred method for receiving comments. Follow the on-line instructions for submitting comments.

C. E-mail: *morris.makeba@epa.gov*

D. Mail: R03–OAR–2004–PA–0004, Makeba Morris, Chief, Air Quality Planning Branch, Mailcode 3AP21, U.S. Environmental Protection Agency, Region III, 1650 Arch Street, Philadelphia, Pennsylvania 19103.

E. Hand Delivery: At the previously-listed EPA Region III address. Such deliveries are only accepted during the Docket's normal hours of operation, and special arrangements should be made for deliveries of boxed information.

Instructions: Direct your comments to RME ID No. R03–OAR–2004–PA–0004. EPA's policy is that all comments received will be included in the public docket without change, and may be made available online at *http://www.docket.epa.gov/rmepub/*, including any personal information provided, unless the comment includes information claimed to be Confidential Business Information (CBI) or other information whose disclosure is restricted by statute. Do not submit information that you consider to be CBI or otherwise protected through RME, regulations.gov or e-mail. The EPA RME and the Federal regulations.gov websites are an ''anonymous access'' system, which means EPA will not know your identity or contact information unless you provide it in the body of your comment. If you send an e-mail comment directly to EPA without going through RME or regulations.gov, your e-mail address will be automatically captured and included as part of the comment that is placed in the public docket and made available on the Internet. If you submit an electronic comment, EPA recommends that you include your name and other contact information in the body of your comment and with any disk or CD–ROM you submit. If EPA cannot read your comment due to technical difficulties and cannot contact you for clarification, EPA may not be able to consider your comment. Electronic files should avoid the use of special characters, any form of encryption, and be free of any defects or viruses.

Docket: All documents in the electronic docket are listed in the RME index at *http://www.docket.epa.gov/rmepub/*. Although listed in the index, some information is not publicly available, *i.e.*, CBI or other information whose disclosure is restricted by statute. Certain other material, such as copyrighted material, is not placed on the Internet and will be publicly available only in hard copy form. Publicly available docket materials are available either electronically in RME or in hard copy during normal business hours at the Air Protection Division, U.S. Environmental Protection Agency, Region III, 1650 Arch Street, Philadelphia, Pennsylvania 19103.

Copies of material to be incorporated by reference are available at the Air and Radiation Docket and Information Center, U.S. Environmental Protection Agency, 1301 Constitution Avenue, NW., Room B108, Washington, DC 20460. Copies of the State submittal are available at the Pennsylvania Department of Environmental Protection, Bureau of Air Quality, PO Box 8468, 400 Market Street, Harrisburg, Pennsylvania 17105.

FOR FURTHER INFORMATION CONTACT: Cristina Fernandez, (215) 814–2178, or by e-mail at *fernandez.cristina@epa.gov*.

SUPPLEMENTARY INFORMATION:

I. Background

In December 1999, EPA identified emission reduction shortfalls in several severe 1-hour ozone nonattainment areas, including those located in the Ozone Transport Region (OTR). States were required areas to address the shortfalls in those areas. The Ozone Transport Commission (OTC) developed model rules to for a number of source categories. One of the model rules is to reduce VOC emissions from consumer products. The OTC model rules are based on existing rules developed by the California Air Resources Board (CARB), which were analyzed and modified by OTC-formed workgroups to address emission reduction needs in the OTR. Adoption and implementation of these model rules by the OTR member states is intended to attain and maintain the 1-hour ozone standard and reduce 8-hour ozone levels.

II. Summary of SIP Revision

On March 26, 2003, the Pennsylvania Department of Environmental Protection (PADEP) submitted a formal revision to its SIP. The SIP revision consists of new regulation Chapter 130, Subchapter B. Consumer Products, Sections 130.201–130.202, Sections 130.211 through 130.216, Sections 130.331 through 130.337, Sections 130.351–130.352, Sections 130.371 through 130.373, Sections 130.391–130.392, Sections 130.411 through 130.414, Section 130.431, Sections 130.451 through 130.465, and Section 130.471. This regulation applies statewide to any person who sells, supplies, offers for sale, or manufactures consumer products on or after January 1, 2005, for use in the Commonwealth of Pennsylvania. This rule includes general provisions, VOC standards, provisions for exemptions, provisions for innovative products, administrative requirements, reporting requirements, provisions for variances, test methods, and provisions for alternative control plans for consumer products.

III. Final Action

EPA is approving a new Pennsylvania regulation, Chapter 130, Subchapter B. Consumer Products as a SIP strengthening measure. The Pennsylvania Consumer Products regulation's VOC limits are all either as stringent or more stringent than the Federal Consumer Products regulation, and are, therefore, approvable. Implementation of this rule will result in statewide emission reductions, and will help the Philadelphia-Wilmington-Trenton ozone nonattainment area attain the 1-hour ozone standard.

EPA is publishing this rule without prior proposal because the Agency views this as a noncontroversial amendment and anticipates no adverse comment. However, in the ''Proposed Rules'' section of today's **Federal Register**, EPA is publishing a separate document that will serve as the proposal to approve the SIP revision if adverse comments are filed. This rule will be effective on February 7, 2005 without further notice unless EPA receives adverse comment by January 7, 2005. If EPA receives adverse comment, EPA will publish a timely withdrawal in the **Federal Register** informing the public that the rule will not take effect. EPA will address all public comments in a subsequent final rule based on the proposed rule. EPA will not institute a second comment period on this action. Any parties interested in commenting must do so at this time.

IV. Statutory and Executive Order Reviews

A. General Requirements

Under Executive Order 12866 (58 FR 51735, October 4, 1993), this action is not a ''significant regulatory action'' and therefore is not subject to review by the Office of Management and Budget. For this reason, this action is also not subject to Executive Order 13211, ''Actions Concerning Regulations That Significantly Affect Energy Supply, Distribution, or Use'' (66 FR 28355, May 22, 2001). This action merely approves state law as meeting Federal requirements and imposes no additional requirements beyond those imposed by state law. Accordingly, the Administrator certifies that this rule will not have a significant economic impact on a substantial number of small entities under the Regulatory Flexibility Act (5 U.S.C. 601 *et seq.*). Because this rule approves pre-existing requirements under state law and does not impose any additional enforceable duty beyond that required by state law, it does not contain any unfunded mandate or significantly or uniquely affect small governments, as described in the Unfunded Mandates Reform Act of 1995 (Pub. L. 104–4). This rule also does not have tribal implications because it will not have a substantial direct effect on one or more Indian tribes, on the relationship between the Federal Government and Indian tribes, or on the distribution of power and responsibilities between the Federal Government and Indian tribes, as specified by Executive Order 13175 (65 FR 67249, November 9, 2000). This action also does not have Federalism implications because it does not have substantial direct effects on the States, on the relationship between the national government and the States, or on the distribution of power and responsibilities among the various levels of government, as specified in Executive Order 13132 (64 FR 43255, August 10, 1999). This action merely approves a state rule implementing a Federal standard, and does not alter the relationship or the distribution of power and responsibilities established in the Clean Air Act. This rule also is not subject to Executive Order 13045 ''Protection of Children from Environmental Health Risks and Safety Risks'' (62 FR 19885, April 23, 1997), because it is not economically significant.

In reviewing SIP submissions, EPA's role is to approve state choices, provided that they meet the criteria of the Clean Air Act. In this context, in the absence of a prior existing requirement for the State to use voluntary consensus standards (VCS), EPA has no authority to disapprove a SIP submission for failure to use VCS. It would thus be inconsistent with applicable law for EPA, when it reviews a SIP submission, to use VCS in place of a SIP submission that otherwise satisfies the provisions of the Clean Air Act. Thus, the requirements of section 12(d) of the National Technology Transfer and Advancement Act of 1995 (15 U.S.C. 272 note) do not apply. This rule does not impose an information collection burden under the provisions of the Paperwork Reduction Act of 1995 (44 U.S.C. 3501 *et seq.*).

B. Submission to Congress and the Comptroller General

The Congressional Review Act, 5 U.S.C. 801 *et seq.*, as added by the Small Business Regulatory Enforcement Fairness Act of 1996, generally provides that before a rule may take effect, the agency promulgating the rule must submit a rule report, which includes a

copy of the rule, to each House of the Congress and to the Comptroller General of the United States. EPA will submit a report containing this rule and other required information to the U.S. Senate, the U.S. House of Representatives, and the Comptroller General of the United States prior to publication of the rule in the **Federal Register**. This rule is not a ''major rule'' as defined by 5 U.S.C. 804(2).

C. Petitions for Judicial Review

Under section 307(b)(1) of the Clean Air Act, petitions for judicial review of this action must be filed in the United States Court of Appeals for the appropriate circuit by February 7, 2005. Filing a petition for reconsideration by the Administrator of this final rule does not affect the finality of this rule for the purposes of judicial review nor does it extend the time within which a petition for judicial review may be filed, and shall not postpone the effectiveness of such rule or action. This action to approve the Pennsylvania VOC control requirements for consumer products may not be challenged later in proceedings to enforce its requirements. (See section 307(b)(2).)

List of Subjects in 40 CFR Part 52

Environmental protection, Air pollution control, Incorporation by reference, Ozone, Reporting and recordkeeping requirements, Volatile organic compounds.

Dated: November 24, 2004.

Donald S. Welsh,

Regional Administrator, Region III.

■ 40 CFR part 52 is amended as follows:

PART 52—[AMENDED]

■ 1. The authority citation for part 52 continues to read as follows:

Authority: 42 U.S.C. 7401 *et seq.*

Subpart NN—Pennsylvania

■ 2. Section 52.2020 is amended by adding paragraph (c)(230) to read as follows:

§ 52.2020 Identification of plan.

* * * * *

(c) * * *

(230) Revisions pertaining to the control of volatile organic compound emissions from consumer products submitted on March 26, 2003 by the Pennsylvania Department of Environmental Protection:

(i) Incorporation by reference.

(A) Letter of March 26, 2003 from the Pennsylvania Department of Environmental Protection transmitting Pennsylvania's consumer products regulations.

(B) 25 PA Code Chapter 130 Subchapter B. Consumer Products, effective on October 5, 2002, consisting of Sections 130.201 and 130.202, 130.211 through 130.216, 130.331 through 130.337, 130.351 and 130.352, 130.371 through 130.373, 130.391 and 130.392, 130.411 and 130.414, 130.431, 130.451 through 130.465, and 130.471.

(ii) Additional Material. Remainder of the State submittal pertaining to the revisions listed in paragraph (c)(230)(i) of this section.

[FR Doc. 04–26939 Filed 12–7–04; 8:45 am]

BILLING CODE 6560–50–P

ENVIRONMENTAL PROTECTION AGENCY

40 CFR Part 180

[OPP–2004–0211; FRL–7685–1]

Cyazofamid; Pesticide Tolerance; Technical Correction

AGENCY: Environmental Protection Agency (EPA).

ACTION: Final rule; correction.

SUMMARY: EPA issued a final rule in the **Federal Register** of September 30, 2004 establishing a tolerance for the combined residues of cyazofamid and its metabolite CCIM in or on potatoes, tomatoes, cucurbits, and imported wine. ISK Biosciences Corporation requested this tolerance under the Federal Food, Drug, and Cosmetic Act (FFDCA), as amended by the Food Quality Protection Act of 1996 (FQPA). Today's document is being issued to correct the signature block.

DATES: This correction is effective on September 30, 2004.

ADRESSES: Follow the detailed instructions as provided under **ADDRESSES** in the **Federal Register** document of September 30, 2004.

FOR FURTHER INFORMATION CONTACT: Janet Whitehurst, Registration Division (7505C), Office of Pesticide Programs, Environmental Protection Agency, 1200 Pennsylvania Ave., NW., Washington, DC 20460–0001; telephone number: (703) 305–6129; e-mail address: *whitehurst.janet@epa.gov*.

SUPPLEMENTARY INFORMATION:

I. General Information

A. Does this Action Apply to Me?

The Agency included in the final rule a list of those who may be potentially affected by this action. If you have questions regarding the applicability of this action to a particular entity, consult the person listed under the **FOR FURTHER INFORMATION CONTACT**.

B. How Can I Access Electronic Copies of this Document and Other Related Information?

In addition to using EDOCKET at *http://www.epa.gov/edocket/*, you may access this **Federal Register** document electronically through the EPA Internet under the ''**Federal Register**'' listings at *http://www.epa.gov/fedrgstr/*. A frequently updated electronic version of 40 CFR part 180 is available at E-CFR Beta Site Two at *http://www.gpoaccess.gov/ecfr/*.

II. What Does this Correction Do?

FR Doc. 04–21931 published in the **Federal Register** of September 30, 2004 (69 FR 58290) (FRL–7367–4) is corrected as follows:

On page 58299, at the top of the first column, in the signature block for the Cyazomid pesticide tolerance, both the signature date and the signature were inadvertently left out. The date and signature should read as follows:

''Dated: September 23, 2004.''

''James Jones,''

III. Why is this Correction Issued as a Final Rule?

Section 553 of the Administrative Procedure Act (APA), 5 U.S.C. 553(b)(B), provides that, when an Agency for good cause finds that notice and public procedure are impracticable, unnecessary or contrary to the public interest, the agency may issue a final rule without providing notice and an opportunity for public comment. EPA has determined that there is good cause for making today's technical correction final without prior proposal and opportunity for comment, because EPA is merely inserting language that was inadvertently omitted from the previously published final rule. EPA finds that this constitutes good cause under 5 U.S.C. 553(b)(B).

IV. Do Any of the Statutory and Executive Order Reviews Apply to this Action?

The applicable statutory and Executive Order reviews were included in the September 30, 2004 **Federal Register** document. This document is a technical correction and as such no new review requirements are applicable.

V. Congressional Review Act

The Congressional Review Act, 5 U.S.C. 801 *et seq.*, as added by the Small Business Regulatory Enforcement Fairness Act of 1996, generally provides

that before a rule may take effect, the agency promulgating the rule must submit a rule report, which includes a copy of the rule, to each House of the Congress and to the Comptroller General of the United States. EPA will submit a report containing this rule and other required information to the U.S. Senate, the U.S. House of Representatives, and the Comptroller General of the United States prior to publication of this final rule in the **Federal Register**.This final rule is not a ''major rule'' as defined by 5 U.S.C. 804(2).

List of Subjects in 40 CFR Part 180

Environmental protection, Administrative practice and procedure, Agriultural commodities, Pesticides and pests, Reporting and recordkeeping requirements.

Dated: November 9, 2004.

James Jones,

Director, Office of Pesticide Programs.

[FR Doc. 04–26820 Filed 12–7–04; 8:45 am]

BILLING CODE 6560–50–S

ENVIRONMENTAL PROTECTION AGENCY

40 CFR Part 271

[FRL–7846–2]

Tennessee: Final Authorization of State Hazardous Waste Management Program Revision

AGENCY: Environmental Protection Agency (EPA).

ACTION: Immediate final rule.

SUMMARY: Tennessee has applied to EPA for Final authorization of the changes to its hazardous waste program under the Resource Conservation and Recovery Act (RCRA). EPA has determined that these changes satisfy all requirements needed to qualify for Final authorization, and is authorizing the State's changes through this immediate final action. EPA is publishing this rule to authorize the changes without a prior proposal because we believe this action is not controversial and do not expect comments that oppose it. Unless we get written comments which oppose this authorization during the comment period, the decision to authorize Tennessee's changes to its hazardous waste program will take effect. If we get comments that oppose this action, we will publish a document in the **Federal Register** withdrawing this rule before it takes effect and a separate document in the proposed rules section of this **Federal Register** will serve as a proposal to authorize the changes.

DATES: This final authorization will become effective on February 7, 2005 unless EPA receives adverse written comments by January 7, 2005. If EPA receives such comments, it will publish a timely withdrawal of this immediate final rule in the **Federal Register** and inform the public that this authorization will not take effect.

ADDRESSES: Submit your comments by one of the following methods:

- Federal eRulemaking Portal: *http://www.regulations.gov.* Follow the on-line instructions for submitting comments.
- E-mail: *gleaton.gwen@epa.gov*
- Fax: (404) 562–8439 (prior to faxing, please notify the EPA contact listed below)
- Mail: Send written comments to Gwen Gleaton at the address listed below.

Instructions: Do not submit information that you consider to be CBI or otherwise protected through *http://www.regulations.gov,* or e-mail. The federal *regulations.gov* website is an ''anonymous access'' system, which means EPA will not know your identity or contact information unless you provide it in the body of your comments. If you submit an electronic comment, EPA recommends that you include your name and other contact information in the body of your comment and with any disk or CD–ROM you submit.

You can view and copy Tennessee's applications from 8 a.m. to 4:30 p.m. at the following addresses: Tennessee Department of Environment and Conservation, Division of Solid Waste Management, 5th Floor, L & C Tower, 401 Church Street, Nashville, Tennessee 37243–1535; and EPA, Region 4, Library, 9th Floor, The Sam Nunn Atlanta Federal Center, 61 Forsyth Street, SW., Atlanta, Georgia 30303–3104; (404) 562–8190.

FOR FURTHER INFORMATION CONTACT: Gwen Gleaton, RCRA Services Section, RCRA Programs Branch, Waste Management Division, U.S. Environmental Protection Agency, Region 4, The Sam Nunn Atlanta Federal Center, 61 Forsyth Street, SW., Atlanta, Georgia 30303–3104; (404) 562–8500.

SUPPLEMENTARY INFORMATION:

A. Why Are Revisions to State Programs Necessary?

States which have received Final authorization from EPA under RCRA section 3006(b), 42 U.S.C. 6926(b), must maintain a hazardous waste program that is equivalent to, consistent with, and no less stringent than the Federal program. As the Federal program changes, States must change their programs and ask EPA to authorize the changes. Changes to State programs may be necessary when Federal or State statutory or regulatory authority is modified or when certain other changes occur. Most commonly, States must change their programs because of changes to EPA's regulations in 40 Code of Federal Regulations (CFR) parts 124, 260 through 266, 268, 270, 273 and 279.

B. What Decisions Have We Made in This Rule?

We conclude that Tennessee's application to revise its authorized program meets all of the statutory and regulatory requirements established by RCRA. Therefore, we grant Tennessee Final authorization to operate its hazardous waste program with the changes described in the authorization application. Tennessee has responsibility for permitting Treatment, Storage, and Disposal Facilities (TSDFs) within its borders (except in Indian Country) and for carrying out the aspects of the RCRA program described in its revised program application, subject to the limitations of the Hazardous and Solid Waste Amendments of 1984 (HSWA). New Federal requirements and prohibitions imposed by Federal regulations that EPA promulgates under the authority of HSWA take effect in authorized States before they are authorized for the requirements. Thus, EPA will implement those requirements and prohibitions in Tennessee, including issuing permits, until the State is granted authorization to do so.

C. What Is the Effect of Today's Authorization Decision?

The effect of this decision is that a facility in Tennessee subject to RCRA will now have to comply with the authorized State requirements instead of the equivalent Federal requirements in order to comply with RCRA. Tennessee has enforcement responsibilities under its State hazardous waste program for violations of such program, but EPA retains its authority under RCRA sections 3007, 3008, 3013, and 7003, which include, among others, authority to:

- Do inspections, and require monitoring, tests, analyses or reports
- Enforce RCRA requirements and suspend or revoke permits
- Take enforcement actions regardless of whether the State has taken its own actions

This action does not impose additional requirements on the regulated community because the regulations for which Tennessee are

being authorized by today's action are already effective, and are not changed by today's action.

D. Why Wasn't There a Proposed Rule Before Today's Rule?

EPA did not publish a proposal before today's rule because we view this as a routine program change and do not expect comments that oppose this approval. We are providing an opportunity for public comment now. In addition to this rule, in the proposed rules section of today's **Federal Register**, we are publishing a separate document that proposes to authorize the State program changes.

E. What Happens if EPA Receives Comments That Oppose This Action?

If EPA receives comments that oppose this authorization, we will withdraw this rule by publishing a document in the **Federal Register** before the rule becomes effective. EPA will base any further decision on the authorization of the State program changes on the proposal mentioned in the previous paragraph. We will then address all public comments in a later final rule. You may not have another opportunity to comment. If you want to comment on this authorization, you must do so at this time.

If we receive comments that oppose only the authorization of a particular change to the State hazardous waste program, we will withdraw that part of this rule but the authorization of the program changes that the comments do not oppose will become effective on the date specified above. The **Federal Register** withdrawal document will specify which part of the authorization will become effective, and which part is being withdrawn.

F. What Has Tennessee Previously Been Authorized for?

Tennessee initially received final authorization on January 22, 1985, effective February 5, 1985 (50 FR 2820) to implement the RCRA hazardous waste management program. We granted authorization for changes to Tennessee's program on April 11, 2003, effective June 10, 2003 (68 FR 17748), December 26, 2001, effective February 25, 2002 (66 FR 66342), October 26, 2000, effective December 26, 2000 (65 FR 64161), September 15, 1999, effective November 15, 1999 (64 FR 49998), January 30, 1998, effective March 31, 1998 (63 FR 45870), on May 23, 2996, effective July 22, 1996 (61 FR 25796), on August 24, 1995, effective October 23, 1995 (60 FR 43979), on May 8, 1995, effective July 7, 1995 (60 FR 22524), on June 1, 1992, effective July 31, 1992 (57 FR 23063), and on June 12, 1987, effective August 11, 1987 (52 FR 22443).

G. What Changes Are We Authorizing With Today's Action?

On October 22, 2004, Tennessee submitted final complete program revision applications, seeking authorization of its changes in accordance with 40 CFR 271.21. We now make an immediate final decision, subject to receipt of comments that oppose this action, that Tennessee's hazardous waste program revision satisfies all of the requirements necessary to qualify for final authorization. Therefore, we grant final authorization for the following program changes:

Description of Federal Requirement	Federal Register date and page	Analogous State authority [1]
169—Petroleum Refining Process Wastes	63 FR 42110 08/06/98	Tennessee Revised Code 1200–1–11–.02(1)(c)1(ii)(IV)III, .02(1)(c)3(ii)(II)II & V, .02(1)(d)1(xii)(I)–(II), .02(1)(d)1(xx), .02(1)(d)1(xx)(I)–(II), .02(1)(d)1(xxi), .02(1)(f)1(iii)(IV)III, .02(1)(f)1(iii)(V), .02(4)(b)1, .02(4)(c), .02(5) Appendix VII, .09(8)(a)2(iii), .10(2)(f)1–2, .10(2)(f)2(i)–(v), .10(2)(f)3, .10(3)(a)/Table.
170—Land Disposal Restrictions Phase IV—Zinc Micro-nutrient Fertilizers, Amendment.	63 FR 46332 08/31/98	Tennessee Revised Code 1200–1–11–.10(3)(a)9.
171—Emergency Revision of the Land Disposal Restrictions (LDR) Treatment Standards for Listed Hazardous Wastes from Carbamate Production.	63 FR 47410 09/04/98	Tennessee Revised Code 1200–1–11–.10(3)(a)7 & 10, .10(3)(a)/Table, .10(3)(i)1/Table.
172—Land Disposal Restrictions Phase IV—Extension of Compliance Date for Characteristic Slags.	63 FR 48124 09/09/98	Tennessee Revised Code 1200–1–11–.10(3)(e)2–6.
173—Land Disposal Restrictions; Treatment Standards for Spent Potliners from Primary Aluminum Reduction (K088); Final Rule.	63 FR 51254 09/24/98	Tennessee Revised Code 1200–1–11–.10(2)(j)3, .10(3)(a)/Table.
175—HWIR Media	63 FR 6584 11/30/98	Tennessee Revised Code 1200–1–11–.01(2)(a) intro., .01(2)(a), .02(1)(d)7,.02(1)(d)7(i), .02(1)(d)7(ii) intro, .02(1)(d)7(ii)(I)–(IV), .06(1)(b)9, .06(1)(b)9(i)–(iii), .06(1)(b)9(iii)(I)–(II), .06(1)(b)9(iv)–(xiii), .06(5)(d)2(xvii), .06(6)(1)4, .06(22)(c)1, .06(22)(c)1(i)–(ii), .06(22)(d)1, .06(22)(e) (Note), .06(22)(e)1–3, .06(22)(e)3(i)–(iii), .06(22)(e)4, .06(22)(e)4(i), .06(22)(e)4(i)(I)–(III), .06(22)(e)4(ii), .06(22)(e)4(ii)(I)–(VI), .06(22)(e)5, .06(22)(e)5(i), .06(22)(e)5(i)(I)–(II), .06(22)(e)5(ii), .06(22)(e)6, .06(22)(e)6(i)–(iii), .06(22)(e)7–13, .06(22)(e)9(i), .06(22)(e)9(i)(I)–(II), .06(22)(e)9(ii), .06(22)(e)10(i), .06(22)(e)10(I)–(III), .06(22)(e)10(ii)–(iii), .06(22)(e)11(i), .06(22)(e)11(ii), .06(22)(e)12(i)–(iv), .06(22)(e)12(i)(I)–(II), .05(1)(b), .10(1)(b)6, .10(4)(a)7, .07(2)(a)10(ii), .07(10)(d)3, .07(10)(n)3, .07(1)(1), .07(3)(d)1, .07(11), .07(11)(a)1(i)–(vi), .07(11)(a)1(i)–(iv)(I)–(II), .07(11)(a)6(i)–(iii), .07(11)(a)6(i)(I)–(II), .07(11)(a)11, .07(11)(b) 1, 6, 11, 16, 21, 26, 31, .07(11)(b)16(i)–(ix), .07(11)(b)16(v)(I)–(III), .07(11)(b)16(vi)(I)–(III), .07(11)(c)1(i)–(ii), .07(11)(c)6, .07(11)(c)6(i)–(iii), .07(11)(c)6(ii)(I)–(IV), .07(11)(c)11, .07(11)(c)11(i)–(iii), .07(11)(c)16(i)–(iv), .07(11)(c)16(i)(I)–(IV), .07(11)(c)16(iii)(I)–(IX), .07(11)(c)16(iv), .07(11)(c)16(iv)(I)–(III), .07(11)(c)21(i)–(vii), .07(11)(c)21(vi)(I)–(VII), .07(11)(c)26(i)–(ii), .07(11)(c)26(i)(I)–(III), .07(11)(c)31, .07(11)(c)31(i)–(iii), .07(11)(c)36, .07(11)(d)1, .07(11)(d)6(i)–(iii), .07(11)(d)6(i)(I)–(VIII), .07(11)(d)11(i)–(ii), .07(11)(d)16, .07(11)(d)21(i)–(iv), .07(11)(d)21(iii)(I)–(III), .07(11)(d)26, 31& 36, .07(11)(e)1, .07(11)(e)1(i)–(ii), .07(11)(e)6(i)–(iv), .07(11)(e)11(i)–(ii), .07(11)(e)16, .07(11)(f)1(i)–(v), .07(11)(f)1(iv)(I)–(IV), .07(11)(f)1(v)(I)–(II).
176—Universal Waste Rule—Technical Amendments	63 FR 71225 12/24/98	Tennessee Revised Code 1200–1–11–.09(7)(a)1, .09(7)(a)/Table, .09(7)(a)2, .09(7)(a)2(i)–(ii), .09(7)(a)2(i)(I)–(VIII), .09(7)(a)2(ii)(I)–(VII), .12(1)(b).

Description of Federal Requirement	Federal Register date and page	Analogous State authority [1]
177—Organic Air Emission Standards for Tanks, Surface Impoundments, and Containers.	64 FR 3382 01/21/99	Tennessee Revised Code 1200–1–11–.03(4)(e)2(i)(I)–(II), .06(30)(b), .06(32)(a)2(v), .06(32)(d)1(i)(I)–(II), .06(32)(e)8(iii), .06(32)(e)8(iii)(I)–(II), .06(32)(g)5(vi), .05(29)(a)2(v), .05(29)(e)1(ii)(I)–(II), .05(29)(e)1(iii)(II)II–IV, .05(29)(e)1(iii)(III), .05(29)(e)2(i)(I)–(II), .05(29)(e)2(iii)(II)II & IV, .05(29)(e)2(iii)(III), .05(29)(f)8(iii), .05(29)(f)8(iii)(I)–(II), .05(29)(h)5(vi).
178—Petroleum Refining Process Wastes—Leachate Exemption.	64 FR 6806 02/11/99	Tennessee Revised Code 1200–1–11–.02(1)(d)2(xii), .02(1)(d)2(xii)(I)–(V).
179—Land Disposal Restrictions Phase IV—Technical Corrections and Clarifications to Treatment Standards.	64 FR 25408 05/11/99	Tennessee Revised Code 1200–1–11–.02(1)(b)3(iii), .02(1)(b)3(iv)/Table, .02(1)(b)5(i)(III), .02(1)(d)1(xviii)–(xix), .02(1)(d)1(xix)(V), .02(1)(d)2(xv)(III), .02(1)(d)2(xv)(III)(I), .03(4)(e)6(vi),.10(1)(b)4 & 9, .10(1)(g)1(iv)/Table, .10(1)(g)2(iii)(II)/Table, .10(1)(g)2(iv)(IV), .10(1)(i)4(ii), .10(1)(i)4(ii)(I), .10(3)(a)9 & 10,.10(3)(a)/Table, .10(3)(i)1/Table, .10(3)(j)3(iii), .10(3)(j)3(iii)(I)–(II).
180—Test Procedures for the Analysis of Oil and Grease and Non–Polar Material.	64 FR 26315 05/14/99	Tennessee Revised Code 1200–1–11–.01(2)(b)(1(xi) & (xvi).
181—Universal Waste Rule: Specific Provisions for Hazardous Waste Lamps.	64 FR 36466 07/06/99	Tennessee Revised Code 1200–1–11–.01(2)(a), .12(1)(a) & (b), .02(1)(j), .12(1)(a)1(ii) & (iv), .06(1)(b)2(x), .05(1)(b)2(xii), .10(1)(a)6, .07(1)(b)4(ix), .12(1)(d)1(i), .12(1)(d)2(ii) & (iii), .12(1)(e)1, .12(1)(f)1, .12(1)(g)1 & 2, .12(1)(g)(i) & (ii), .12(1)(g)3, .12(1)(g)3(i) & (ii), .12(1)(h), .12(1)(i), .12(1)(c)1, .12(1)(c)1(i) & (ii), .12(1)(c)2, .12(1)(b), .12(1)(6), .12(2)(a), .12(2)(d)4(i), .12(2)(d)4(i)(I) & (II), .12(2)(e)5, .12(3)(a), .12(3)(c)2(iv) & (v), .12(3)(d)4(i), .12(3)(d)4(i)(I) & (II), .12(3)(e)5, .12(4)(a), .12(4)(a)1, .12(7)(b)1.
182—NESHAPS: Final Standards for Hazardous Waste Pollutants for Hazardous Waste Combustors.	64 FR 52828 09/30/99 64 FR 63209 11/19/99	Tennessee Revised Code 1200–1–11.01(2)(a), .02(4)(i)1(ii)/Table 1, .06(15)(a)2, .06(15)(a)2(i) & (ii), .06(15)(a)3–5, .06(27)(b), .05(15)(a), .05(15)(a)2(i) & (ii), .05(15)(a)3, .09(8)(a)2–8,.09(8)(a)2(i) & (ii), .09(8)(a)2(ii)(I)–(IV), .09(8)(a)4(i) & (iii), .09(8)(a)4(i)(I)–(III), .09(8)(a)4(iii)(I)–(III), .09(8)(b)3, .09(8)(b)3(i), .09(8)(f)3 & 4, .09(8)(f)3(i)–(iii), .09(8)(m)2(i), .09(8)(m)2(ii)(I), .09(8)(m)2(ii)(I)/Note, .09(30) Appendix VIII, .07(5)(b)5, .07(5)(b)5(v), .07(5)(b)8, .07(10) Appendix I, .07(1)(e) & (j).
183—Land Disposal Restrictions Phase IV—Technical Corrections.	64 FR 56469 10/20/99	Tennessee Revised Code 1200–1–11–.02(4)(c), .03(4)(e)2(iv), .10(1)(g)1(iii)(III), .10(3)(a)10, .10(3)(a)10/Table, .10(3)(j)3(i)(I) & (II).
184—Accumulation Time for Waste Water Treatment Sludges	65 FR 12378 03/08/00	Tennessee Revised Code 1200–1–11–.03(4)(e), .03(4)(e)2(iv), .03(4)(e)9–11, .03(4)(e)9(i)–(iii), .03(4)(e)9(iv) intro, .03(4)(e)9(iv)(I) intro, .03(4)(e)9(iv)(I)I & II, .03(4)(e)9(iv)(I)III intro, .03(4)(e)9(iv)(I)III.A & B, .03(4)(e)9(iv)(III)–(V).
185—Organobromine Appendix Production Wastes Vacatur ...	65 FR 14472 03/17/00	Tennessee Revised Code 1200–1–11–.02(4)(c)/Table, .02(4)(d)6/Table, .02(4) VII & VIII, .10(2)(d), .10(3)(a)10/Table, .10(3)(i)/Table.
187—Petroleum Refining Process Wastes—Clarification	64 FR 36365 06/08/00	Tennessee Revised Code 1200–1–11–.02(4)(b)1/Table, .10(5) Appendix VII.
188—Hazardous Air Pollutant Standards; Technical Corrections.	65 FR 42292 07/10/00 66 FR 24272 05/14/01 66 FR 35087 07/03/01	Tennessee Revised Code 1200–1–11–.02(4)(i)3(ii)(IV), .06(15)(a)2(i), .06(15)(a)2(iii), .07(9)(c)5(x)(I).
189—Chlorinated Aliphatics Listing and LDRs for Newly Identified Wastes.	65 FR 67068 11/08/00	Tennessee Revised Code 1200–1–11–.02(4)(c), .02(5) Appendix VII, .02(5) Appendix VIII, .10(2)(d)1–4, .10(2)(d)2(i)–(v), .10(2)(d)4(i) & (ii), .10(3)(a) Table, .10(3)(i) Table.
190—Land Disposal Restrictions Phase IV—Deferral for PCBs in Soil.	65 FR 81373 12/26/00	Tennessee Revised Code 1200–1–11–.10(2)(c)1 & 2, .10(2)(c)2(i)(I) & (II), .10(2)(c)2(ii)(I) & (II), .10(2)(c)2(iii) & (iv), .10(5) Appendix III, .10(3)(j)4, .10(5) Appendix III.
191—Mixed Waste Rule	66 FR 27218 05/16/01	Tennessee Revised Code 1200–1–11–.09(14)(a)1, .09(14)(b)1 & 6, .09(14)(b)11(i) & (ii), .09(14)(c)11(ii)(I)–(V), .09(14)(c)1, .09(14)(d)1(i) & (ii), .09(14)(d)1(i)(I), .09(14)(d)1(i)(I)I–III, .09(14)(d)6, .09(14)(d)6(i)(I) & (II), .09(14)(d)6(i)(II)I–IV, .09(14)(d)6(ii), .09(14)(e)1(i), .09(14)(e)1(i)(I)–(IV), .09(14)(e)1(ii), .09(14)(f)1(i) & (ii), .09(14)(g)1, .09(14)(l)I, .09(14)(m)1, .09(14)(m)1(i) & (ii), .09(14)(n)1, .09(14)(n)1(i)–(iv), .09(14)(n)6, 11, 16, 21, & 26, .09(14)(n)16(i)–(iv), .09(14)(n)26(i)–(iii), .09(14)(o)1, .09(14)(o)1(i)–(ii), .09(14)(p)1, .09(14)(p)1(i)–(v), .09(14)(q)1, .09(14)(q)1(i) & (ii), .09(14)(q)1(i)(I)I–III, .09(14)(q)1(II), .09(14)(q)1, .09(14)(q)6(i) & (ii), .09(14)(q)6(i)(I) & (II), .09(14)(q)6(i)(II)I–IV.
192A—Mixture and Derived—From Rules	66 FR 27266 05/16/01	Tennessee Revised Code 1200–1–11–.02(1)(c)1(ii)(III) & (IV), .02(3)(c)3(ii)(I), .02(3)(c)7(i)–(iii), .02(3)(c)7(ii)(I) & (II), .02(3)(c)8(i)–(iii), .02(3)(c)8(ii)(I) & (II)
192B—Land Disposal Restrictions; Correction	66 FR 27266 05/16/01	Tennessee Revised Code 1200–1–11–.10(5) Appendix VII.
193—Change of Official EPA Mailing Address	66 FR 34374 06/28/01	Tennessee Revised Code 1200–1–11–.01(2)(b)1(xi).
194—Mixture and Derived—From Rules Revision II	66 FR 50332 10/03/01	Tennessee Revised Code 1200–1–11–.02(1)(c)1(ii)(IV), .02(1)(c)1(ii)(IV)I–VII, .02(1)(c)7(iv).
195—Inorganic Chemical Manufacturing Wastes Identification and Listing..	66 FR 58258 11/20/01 67 FR 17119 04/09/02	Tennessee Revised Code 1200–1–11–.02(1)(d)2(xii), .02(1)(d)2(xii)(I)–(V), .02(4)(c), .02(5) Appendix VII, .10(2)(g)1, .10(2)(g)2 intro, .10(2)(g)2(i)–(v), .10(2)(g)3, .10(3)(a)10/ Table.

Description of Federal Requirement	Federal Register date and page	Analogous State authority [1]
196—CAMU Amendments	67 FR 2962 01/22/02	Tennessee Revised Code 1200–1–11–.01 (2)(a), .06(22)(a)1 & 2, .06(22)(b), .06(22)(b) intro, .06(22)(c)1, .06(22)(c)1(i)–(v), .06(22)(c)1(i)(I)& (II), .06(22)(c)1(i)(II)I & II, .06(22)(c)1(i)(III), .06(22)(c)(iii)(I)–(IV), .06(22)(c)2(i) & (ii), .06(22)(c)2(i)(I) & (II), .06(22)(c)3, .06(22)(c)3(i)–(vii), .06(22)(c)4, .06(22)(c)4(i)–(iii), .06(22)(c)5, .06(22)(c)5(i)–(vi), .06(22)(c)5(ii)(I) & (II), .06(22)(c)5(iii)(II)I & II, .06(22)(c)5(iv)(I), .06(22)(c)5(iv)(I)I, .06(22)(c)5(iv)(I)I.A & B, .06(22)(c)5(iv)(I)II & III, .06(22)(c)5(iv)(II)–(VII), .06(22)(c)5(iv)(IV)I–VI, .06(22)(c)(5)(iv)(V), .06(22)(c)(5)(iv)(V)I–V, .06(22)(c)(5)(iv)(V)V.A–E, .06(22)(c)5(v)(I)–(III), .06(22)(c)5(v)(I)–(III), .06(22)(c)5(vi)(I), .06(22)(c)5(vi)(I)I–II, .06(22)(c)5(vi)(II), .06(22)(c)5(vi)(II)I–II, .06(22)(c)5(vi)(III), .06(22)(c)5(vi)(III)I–VI, .06(22)(c)5(vi)(IV), .06(22)(c)5(vi)(IV)I, .06(22)(c)5(vi)(IV)I.A–E, .06(22)(c)5(vi)(IV)II, .06(22)(c)5(vi)(V), .06(22)(c)6, .06(22)(c)6(i) & (ii), .06(22)(c)6(ii)(I) & (II), .06(22)(c)7–11, .06(22)(e)1(i) & (ii), .06(22)(f)1, .06(22)(f)1(i) & (ii), .06(22)(f)1(ii)(I)–(III), .06(22)(f)1(iii), .06(22)(f)2–7, .06(22)(f)5(i)–(vi).
197—Hazardous Air Pollutant Standards for Combustors: Interim Standards.	67 FR 6792 02/13/02	Tennessee Revised Code 1200–1–11–.06(15)(a)2(i) & (iv), .06(15)(a)2(iv)(I) & (II), .05(15)(a)2(i) & (iii), .09(8)(a)2(ii)(I)–(V), .07(5)(b)5(v), .07(5)(b)8 intro, .07(1)(e) intro,.07(1)(j) intro, .07(12)(a)1, .07(12)(a)1(i), .07(12)(a)1(i)(I), .07(12)(a)1(i)(I)I & II, .06(12)(a)1(i)(II), .06(12)(a)1(i)(II)I, .07(12)(a)1(i)(II)I.A & B, .07(12)(a)1(i)(II)II, .07(12)(a)1(i)(II)II.A & B, .07(12)(a)1(i)(II)II.B(A) & (B), .07(12)(a)1(i)(III), .07(12)(a)1(i)(III)I & II, .07(12)(a)1(ii), .07(12)(a)1(ii)(I), .07(12)(a)1(ii)(I)I, .07(12)(a)1(ii)(I)I.A & B, .07(12)(a)1(ii)(II), .07(12)(a)1(ii)(II)I.A & B, .07(12)(a)1(ii)(II)II, .07(12)(a)1(ii)(II)II.A & B, .07(12)(a)1(ii)(II)II.B(A) & B, .07(12)(a)1(ii)(III), .07(12)(a)1(ii)(III)I & II, .07(12)(a)2, .07(12)(a)2(i), .07(12)(a)2(i)(I) & (II), .07(12)(a)2(ii).
198—Hazardous Air Pollutant Standards for Combustors; Corrections.	67 FR 6968 02/14/02	Tennessee Revised Code 1200–1–11–.09(8)(a)1, .09(8)(a)2(i),.09(8)(a)4(i)(I)II, .09(8)(a)4(ii)(I), .09(8)(a)4(ii)(II), .09(8)(a)4(iii) intro, .09(8)(a)4(iii)(I) intro, .09(8)(a)4(iii)(I)IV, .07(9)(c)5(x)(I)
199—Vacatur of Mineral Processing Spent Materials Being Reclaimed as Solid Wastes and TCLP Use with MGP Waste.	67 FR 11251 03/13/02	Tennessee Revised Code 1200–1–11–.02(1)(b)3(iii), .02(1)(d)1(xix), .02(1)(d)1(xix)(I)–(VI), .02(1)(d)1(xix)(IV)I–III, .02(3)(d)1

[1] The Tennessee provisions are from the Tennessee Hazardous Waste Management Regulations effective November 28, 2000, October 17, 2001, July 22, 2002, October 8, 2002, and January 12, 2004.

H. Where Are The Revised State Rules Different From The Federal Rules?

There are no State requirements that are more stringent or broader in scope than the Federal requirements.

I. Who Handles Permits After the Authorization Takes Effect?

Tennessee will issue permits for all the provisions for which it is authorized and will administer the permits it issues. EPA will continue to administer any RCRA hazardous waste permits or portions of permits which we issued prior to the effective date of this authorization. At the time the State program is approved, EPA will suspend issuance of Federal permits in the State. EPA will transfer any pending permit applications, completed permits or pertinent file information to the State within thirty days of the approval of the State program. We will not issue any more new permits or new portions of permits for the provisions listed in the Table above after the effective date of this authorization. EPA will continue to implement and issue permits for HSWA requirements for which Tennessee is not yet authorized.

J. How Does Today's Action Affect Indian Country (18 U.S.C. 115) in Tennessee?

The State of Tennessee's Hazardous Waste Program is not being authorized to operate in Indian Country.

K. What Is Codification and Is EPA Codifying Tennessee's Hazardous Waste Program as Authorized in This Rule?

Codification is the process of placing the State's statutes and regulations that comprise the State's authorized hazardous waste program into the Code of Federal Regulations. We do this by referencing the authorized State rules in 40 CFR part 272. We reserve the amendment of 40 CFR part 272, subpart RR for this authorization of Tennessee's program changes until a later date.

L. Administrative Requirements

The Office of Management and Budget has exempted this action from the requirements of Executive Order 12866 (58 FR 51735, October 4, 1993), and therefore this action is not subject to review by OMB. This action authorizes State requirements for the purpose of RCRA 3006 and imposes no additional requirements beyond those imposed by State law. Accordingly, I certify that this action will not have a significant economic impact on a substantial number of small entities under the Regulatory Flexibility Act (5 U.S.C. 601 *et seq.*). Because this action authorizes pre-existing requirements under State law and does not impose any additional enforceable duty beyond that required by State law, it does not contain any unfunded mandate or significantly or uniquely affect small governments, as described in the Unfunded Mandates Reform Act of 1995 (Pub. L. 104–4). For the same reason, this action also does not significantly or uniquely affect the communities of Tribal governments, as specified by Executive Order 13084 (63 FR 27655, May 10, 1998). This action will not have substantial direct effects on the States, on the relationship between the national government and the States, or on the distribution of power and responsibilities among the various levels of government, as specified in Executive Order 13132 (64 FR 43255, August 10, 1999), because it merely authorizes State requirements as part of the State RCRA hazardous waste program without altering the relationship or the distribution of power and responsibilities established by RCRA. This action also is not subject to Executive Order 13045 (62 FR 19885, April 23, 1997), because it is not economically significant and it does not make decisions based on environmental health or safety risks.

Under RCRA 3006(b), EPA grants a State's application for authorization as

long as the State meets the criteria required by RCRA. It would thus be inconsistent with applicable law for EPA, when it reviews a State authorization application, to require the use of any particular voluntary consensus standard in place of another standard that otherwise satisfies the requirements of RCRA. Thus, the requirements of section 12(d) of the National Technology Transfer and Advancement Act of 1995 (15 U.S.C. 272 note) do not apply. As required by section 3 of Executive Order 12988 (61 F.R. 4729, February 7, 1996), in issuing this rule, EPA has taken the necessary steps to eliminate drafting errors and ambiguity, minimize potential litigation, and provide a clear legal standard for affected conduct. EPA has complied with Executive Order 12630 (53 F.R. 8859, March 15, 1988) by examining the takings implications of the rule in accordance with the ''Attorney General's Supplemental Guidelines for the Evaluation of Risk and Avoidance of Unanticipated Takings' issued under the Executive Order. This rule does not impose an information collection burden under the provisions of the Paperwork Reduction Act of 1995 (44 U.S.C. 3501 *et seq.*).

The Congressional Review Act, 5 U.S.C. 801 *et seq.*, as added by the Small Business Regulatory Enforcement Fairness Act of 1996, generally provides that before a rule may take effect, the agency promulgating the rule must submit a rule report, which includes a copy of the rule, to each House of the Congress and to the Comptroller General of the United States. EPA will submit a report containing this document and other required information to the U.S. Senate, the U.S. House of Representatives, and the Comptroller General of the United States prior to publication in the **Federal Register**. A major rule cannot take effect until 60 days after it is published in the **Federal Register**. This action is not a ''major rule'' as defined by 5 U.S.C. 804(2). This action will be effective February 7, 2005.

List of Subjects in 40 CFR Part 271

Environmental protection, Administrative practice and procedure, Confidential business information, Hazardous materials transportation, Hazardous waste, Indians-lands, Intergovernmental relations, Penalties, Reporting and recordkeeping requirements.

Authority: This action is issued under the authority of sections 2002(a), 3006 and 7004(b) of the Solid Waste Disposal Act as amended 42 U.S.C. 6912(a), 6926, 6974(b).

Dated: November 16, 2004.

J.I. Palmer, Jr.,

Regional Administrator, Region 4.

[FR Doc. 04–26943 Filed 12–7–04; 8:45 am]

BILLING CODE 6560–50–P

DEPARTMENT OF TRANSPORTATION

Research and Special Programs Administration

49 CFR Parts 171, 173, 174, 175, 176, 177, and 178

[Docket No. RSPA–98–4952 (HM–223)]

RIN 2137–AC68

Applicability of the Hazardous Materials Regulations to Loading, Unloading, and Storage

AGENCY: Research and Special Programs Administration (RSPA), DOT.

ACTION: Final rule; delay of effective date.

SUMMARY: On October 30, 2003, RSPA published a final rule (68 FR 61905) to clarify the applicability of the Hazardous Materials Regulations to loading, unloading, and storage operations. RSPA is delaying the effective date of the final rule from January 1, 2005 until June 1, 2005.

DATES: The effective date of the final rule amending 49 CFR parts 171, 173, 174, 175, 176, 177, and 178 published at 68 FR 61905 on October 30, 2003, and delayed at 69 FR 30588 on May 28, 2004, is further delayed until June 1, 2005.

FOR FURTHER INFORMATION CONTACT: Susan Gorsky (202) 366–8553, Office of Hazardous Materials Standards, Research and Special Programs Administration; or Donna O'Berry (202) 366–4400, Office of the Chief Counsel, Research and Special Programs Administration.

SUPPLEMENTARY INFORMATION:

I. Background

On October 30, 2003, the Research and Special Programs Administration (RSPA, we) published a final rule to clarify the applicability of the Hazardous Materials Regulations (HMR; 49 CFR parts 171–180) to specific functions and activities, including hazardous materials loading and unloading operations and storage of hazardous materials during transportation (68 FR 61906). The final rule amended the HMR to incorporate the following new definitions and provisions:

- We defined a new term—''pre-transportation function''—to mean a function performed by any person that is required to assure the safe transportation of a hazardous material in commerce. When performed by shipper personnel, loading of packaged or containerized hazardous material onto a transport vehicle, aircraft, or vessel and filling a bulk packaging with hazardous material in the absence of a carrier for the purpose of transporting it is a pre-transportation function as that term is defined in this final rule. Pre-transportation functions must be performed in accordance with requirements in the HMR.
- We defined ''transportation'' to mean the movement of property and loading, unloading, or storage incidental to the movement. This definition is consistent with the definition of ''transportation'' in Federal hazardous materials transportation law (Federal hazmat law; 49 U.S.C. 5101 *et seq.*). Transportation in commerce begins when a carrier takes physical possession of a hazardous material for the purpose of transporting it and continues until delivery of the package to its consignee or destination as evidenced by the shipping documentation under which the hazardous material is moving, such as shipping papers, bills of lading, freight orders, or similar documentation.
- We defined ''movement'' to mean the physical transfer of a hazardous material from one geographic location to another by rail car, aircraft, motor vehicle, or vessel.
- We defined ''loading incidental to movement'' to mean the loading by carrier personnel or in the presence of carrier personnel of packaged or containerized hazardous material onto a transport vehicle, aircraft, or vessel for the purpose of transporting it. For a bulk packaging, ''loading incidental to movement'' means the filling of the packaging with a hazardous material by carrier personnel or in the presence of carrier personnel for the purpose of transporting it. Loading incidental to movement is regulated under the HMR.
- We defined ''unloading incidental to movement'' to mean the removal of a packaged or containerized hazardous material from a transport vehicle, aircraft, or vessel or the emptying of a hazardous material from a bulk packaging after a hazardous material has been delivered to a consignee and prior to the delivering carrier's departure from the consignee facility or premises. Unloading incidental to movement is subject to regulation under the HMR. Unloading by a consignee after the delivering carrier has departed the facility is not unloading incidental to movement and not regulated under the HMR.

• We defined ''storage incidental to movement'' to mean storage by any person of a transport vehicle, freight container, or package containing a hazardous material between the time that a carrier takes physical possession of the hazardous material for the purpose of transporting it until the package containing the hazardous material is physically delivered to the destination indicated on a shipping document. However, in the case of railroad shipments, even if a shipment has been delivered to the destination shown on the shipping document, if the track is under the control of a railroad carrier or track is used for purposes other than moving cars shipped to or from the lessee, storage on the track is storage incidental to movement. We revised the definition of ''private track or private siding'' to make this clear. Storage at a shipper facility prior to a carrier exercising control over or taking possession of the hazardous material or storage at a consignee facility after a carrier has delivered the hazardous material is not storage incidental to movement and is not regulated under the HMR.

• We amended § 171.1 of the HMR to list regulated and non-regulated functions. Regulated functions include: (1) Activities related to the design, manufacture, and qualification of packagings represented as qualified for use in the transportation of hazardous materials; (2) pre-transportation functions; and (3) transportation functions (movement of a hazardous material and loading, unloading, and storage incidental to the movement). Non-regulated functions include: (1) Rail and motor vehicle movements of a hazardous material solely within a contiguous facility where public access is restricted; (2) transportation of a hazardous material in a transport vehicle or conveyance operated by a Federal, State, or local government employee solely for government purposes; (3) transportation of a hazardous material by an individual for non-commercial purposes in a private motor vehicle; and (4) any matter subject to U.S. postal laws and regulations.

• We amended § 171.1 of the HMR to indicate that facilities at which functions are performed in accordance with the HMR may be subject to applicable standards and regulations of other Federal agencies or to applicable State or local government laws and regulations (except to the extent that such non-Federal requirements may be preempted under Federal hazmat law). Federal hazmat law does not preempt other Federal statutes nor does it preempt regulations issued by other Federal agencies to implement statutorily authorized programs. The final rule was intended to clarify the applicability of the HMR to specific functions and activities. It is important to note that facilities at which pre-transportation or transportation functions are performed must comply with Occupational Safety and Health Administration (OSHA) and state or local regulations applicable to physical structures—for example, noise and air quality control standards, emergency preparedness, fire codes, and local zoning requirements. Facilities may also have to comply with applicable State and local regulations for hazardous materials handling and storage operations. Facilities at which pre-transportation or transportation functions are performed may also be subject to Environmental Protection Agency (EPA) and OSHA regulations. For example, facilities may be subject to EPA's risk management; community right-to-know; hazardous waste tracking and disposal; and spill prevention, control and countermeasure requirements, and OSHA's process safety management and emergency preparedness requirements. Similarly, facilities at which pre-transportation functions are performed may also be subject to regulations of the Bureau of Alcohol, Tobacco, Firearms, and Explosives (ATF) concerning the handling of explosives.

II. Appeals of the Final Rule

We received 14 appeals of the final rule from Ag Processing Inc. (AGP); Akzo Nobel (Akzo); Archer Daniels Midland Company (Archer Daniels); the Association of American Railroads (AAR); the Dangerous Goods Advisory Council (DGAC); the Dow Chemical Company (Dow); DuPont; Eastman Chemical Company (Eastman); the Institute of Makers of Explosives (IME); Norfolk Southern Corporation (Norfolk Southern); the Spa and Pool Chemical Manufacturers' Association (SPCMA); the Sulphur Institute; the Utility Solid Waste Activities Group (USWAG); and Vermont Railway, Inc. (Vermont Railway).

Appellants raised a number of issues related to the consistency of the final rule with Federal hazardous materials transportation law; state and local regulation of hazardous materials facilities; the relationship of the HMR to regulations promulgated by OSHA, EPA, and ATF; the definitions adopted in the final rule for ''unloading incidental to movement,'' ''transloading,'' and ''storage incidental to movement;'' and the consistency of the HM–223 final rule with security regulations adopted in a final rule issued under Docket No. HM–232.

III. Delay of Effective Date

On May 28, 2004, we published a final rule to delay the effective date of the October 30, 2003 final rule until January 1, 2005 (69 FR 30588). In the May 28, 2004 final rule, we explained that the issues raised by appellants concerning the October 30, 2003 final rule were detailed and complex and that delaying the effective date would provide us with sufficient time to fully address the issues raised by the appellants and to coordinate the appeals document fully with the other Federal agencies that assisted us in developing the HM–223 final rule. Unfortunately, we have not been able to coordinate decisions concerning the appeals to the October 30, 2003 final rule as expeditiously as we had hoped. Therefore, we have decided to delay the effective date of the final rule until June 1, 2005.

IV. Continued Applicability of the HMR

The October 30, 2003 final rule is based on long-standing administrative determinations as to the applicability of the HMR to specific functions and activities. These administrative determinations remain in effect even though the effective date of the HM–223 final rule is delayed. Therefore, notwithstanding the action taken in this final rule to delay the effective date of the October 30, 2003 final rule until June 1, 2005, you may generally rely on the preamble discussion for the October 30, 2003 final rule for guidance as to how the HMR apply to functions and activities related to the transportation of hazardous materials in commerce; the relationship of the HMR to standards and regulations issued by OSHA, EPA and ATF; and the preemption provisions of Federal hazmat law as they apply to non-Federal laws and regulations applicable to the transportation of hazardous materials in commerce. Note, however, that because the amendments to § 174.67 of the HMR affecting rail tank car unloading operations conducted by consignees will not become effective until June 1, 2005, the requirements in § 174.67 continue to apply to any person unloading hazardous materials from a rail tank car. Persons holding exemptions applicable to any of the requirements in § 174.67 must continue to maintain such exemptions in effect until June 1, 2005.

V. Effect of Delay on Revised Incident Reporting Requirements

On December 3, 2003 (68 FR 67745), we published a final rule under docket HM–229 revising the incident reporting requirements in §§ 171.15 and 171.16 of the HMR and the Hazardous Materials Incident Report Form. On May 26, 2004 (69 FR 30113), we published a final rule making several corrections to the December 3, 2003 final rule and extending its effective date until January 1, 2005. We extended the effective date of the incident reporting final rule to provide sufficient time for development and testing of the software to enable electronic reporting of incidents and for outreach to the regulated community.

Several persons have suggested that, because the HM–229 final rule references definitions adopted in the HM–223 final rule, the effective date for the HM–229 final rule must coincide with the effective date for the HM–223 final rule. We do not agree. As stated above, the HM–223 final rule adopts definitions that are based on long-standing administrative determinations as to the applicability of the HMR to specific functions and activities. These administrative determinations remain in effect even though the effective date of the HM–223 final rule is delayed.

The HM–229 final rule expands the incident reporting requirements to each person who is in physical control of a hazardous material while it is being transported in commerce. Generally, the person in physical control of the hazardous material during transportation will be either the carrier or the person having physical control of the hazardous material for the time that it may be stored during transportation. The HM–229 final rule states, ''Consistent with the definitions adopted in the HM–223 final rule, storage incidental to movement is storage by any person of a transport vehicle, freight container, or package containing a hazardous material between the time that a carrier takes physical possession of the hazardous material until the package containing the hazardous material is physically delivered to the destination indicated on a shipping document.'' (68 FR 67751) The HM–223 definition for ''storage incidental to movement'' is consistent with previously issued preemption determinations and letters of clarification concerning the applicability of the HMR to storage operations (see preamble discussion to the NPRM published under docket HM–223 on June 14, 2001; 66 FR 32434–36). Thus, notwithstanding the delay in the effective date of the HM–223 final rule, the incident reporting requirements adopted in HM–229 apply to persons in physical possession of a hazardous material between the time that the hazardous material is offered for transportation to a carrier and the time it reaches its intended destination and is accepted by the consignee ''that is, to carriers and to owners or operators of facilities at which the hazardous material may be stored during transportation.

Issued in Washington, DC, on December 1, 2004, under authority delegated in 49 CFR part 1.

Samuel G. Bonasso,

Deputy Administrator, Research and Special Programs Administration.

[FR Doc. 04–26852 Filed 12–7–04; 8:45 am]

BILLING CODE 4910–60–P

DEPARTMENT OF TRANSPORTATION

National Highway Traffic Safety Administration

49 CFR Parts 571, 585, 586, 589, 590, 596, and 597

[Docket No. NHTSA–04–18726]

RIN 2127–AI91

Federal Motor Vehicle Safety Standards; Occupant Crash Protection

AGENCY: National Highway Traffic Safety Administration (NHTSA), Department of Transportation.

ACTION: Final rule.

SUMMARY: This document adopts NHTSA's proposal to require all designated seating positions in rear seats, other than side-facing seats, be equipped with Type 2 integral lap/shoulder safety belts. Side-facing seats may be equipped with either a Type 1 lap belt or a Type 2 belt. This final rule responds to a Congressional mandate that the agency begin to phase-in requirements for lap/shoulder belts for all rear seating positions, wherever practicable, not later than September 1, 2005.

DATES: *Effective Date:* The amendments made in this rule are effective September 1, 2005. *Petitions:* Petitions for reconsideration must be received by January 24, 2005.

ADDRESSES: Petitions for reconsideration should refer to the docket and notice number of this document and be submitted to: Administrator, National Highway Traffic Safety Administration, 400 Seventh Street, SW., Washington, DC 20590.

FOR FURTHER INFORMATION CONTACT: For non-legal issues, you may call Sanjay Patel, Office of Crashworthiness Standards, at 202–366–4583.

For legal issues, you may call Christopher Calamita, Office of the Chief Counsel, at 202–366–2992.

You may send mail to both of these officials at the National Highway Traffic Safety Administration, 400 Seventh St., SW., Washington, DC, 20590.

SUPPLEMENTARY INFORMATION:

Table of Contents

I. Background
II. Summary of the Proposed Requirements
III. Summary of Public Comments
IV. Summary of the Final Rule
V. Requirements of the Final Rule
A. General Requirements
B. Allowance for Detachable Type 2 Belts
1. Removable Seats
2. Folding Seats
3. Seats Located Adjacent to An Aisle
4. Bus Seats
5. Swivel seats
VI. Phase-In of the New Requirements
VII. Other Issues
VIII. Costs and Benefits Associated With the Final Rule
IX. Rulemaking Analyses and Notices

I. Background

On December 4, 2002, the President signed into law ''Anton's Law'', Public Law 107–318 (December 4, 2002; 116 Stat. 2772), which provides for the improvement of child safety devices when installed in motor vehicles. One of the provisions of Anton's Law mandates the installation of lap/shoulder belts in rear seating positions. Specifically, section 5(a) of the law directs the Secretary of Transportation, through NHTSA, to issue a final rule by December 2004 that would:

> require a lap and shoulder belt assembly for each rear designated seating position in a passenger motor vehicle with a gross vehicle weight rating of 10,000 pounds or less, except that if the Secretary determines that installation of a lap and shoulder belt assembly is not practicable for a particular designated seating position in a particular type of passenger motor vehicle, the Secretary may exclude the designated seating position from the requirement.

Section 5(b) of the statute further specifies that the final rule be implemented in phases on a production year basis, beginning with the first production year after the year the final rule is published.[1] The rule is to be

[1] ''The requirement prescribed under subsection (a)(1) shall be implemented in phases on a production year basis beginning with the production year that begins not later than 12 months after the end of the year in which the regulations are prescribed under subsection (a). The final rule shall apply to all passenger motor vehicles with a gross vehicle weight rating of 10,000 pounds or less that are manufactured in the third production year of the implementation phase-in under the schedule.''

effective for all vehicles by the third production year of the phase-in. Thus, according to the schedule mandated by Anton's Law, the phase-in would commence on September 1, 2005, and all vehicles would have to meet the requirements of the final rule by September 1, 2007.

NHTSA published a notice of proposed rulemaking (NPRM) proposing to implement section 5 on August 6, 2003 (68 FR 46546) [Docket No. NHTSA–03–15817; Notice 1]. A detailed history of the agency's rulemaking activities related to the regulation of safety belts in the rear seat of vehicles is provided in that document.

One of the primary reasons for today's rule is the increased protection that children between the ages of four and eight gain by having a lap/shoulder belt made available in rear inboard seating positions. When these Type 2 belts are installed in the rear inboard seating position, there is an additional, and potentially safer, seating position available for a child in a belt-positioning booster seat. Approximately 77% of the passenger car fleet and 49% of the light truck and van (LTV) fleet [2] currently on the road already have Type 2 belts in the rear inboard seating position. Belt positioning booster seats should enable children to attain the same effectiveness rates from lap/shoulder belts as the rest of the population, since they allow proper positioning for children in the four-to eight-year-old age group. Additionally, the presence of an inboard lap/shoulder belt may shift seat usage from the outboard positions to inboard seat positions. This would lead to some reduction of injury or death in side impact crashes.

The potential benefits associated with requiring lap/shoulder belts for rear inboard seating positions are not limited to the potential for increased use of booster seats. It would also benefit older occupants. Current belt use among rear inboard-seated passengers in passenger cars is approximately 50 percent, while the belt use among rear inboard-seated passengers in LTVs is slightly higher at 57 percent. In a 1999 study, NHTSA found that belt use was approximately seven to ten percent higher at rear outboard designated seating positions with a lap/shoulder belt than at ones with only a lap belt.[3] We are unsure why the presence of a Type 2 belt is associated with this increased level of safety belt use. Whatever the reason, the combination of higher belt use and increased benefits related to the additional protection afforded by the shoulder belt results in greater benefits than lap belts alone. This is true for every forward-facing seating position. Thus, the increase in belt use attributable to the presence of a Type 2 belt in the rear inboard seating positions introduces the potential to reduce the risk of serious injury or death for occupants seated in this position.

If the switch from lap belts to lap/shoulder belts in rear inboard seating positions did not lead to any increase in belt use, NHTSA estimates that the addition of a shoulder belt to the rear inboard seating positions of passenger cars would prevent 5 fatalities and 111 injuries (AIS 2–5) annually. Similar numbers, 5 fatalities and 134 injuries (AIS 2–5) would be achieved in requiring lap/shoulder belts in the rear inboard seats of LTVs. These reductions in injuries and fatalities are purely the result of the added protection offered by the shoulder belt.

As noted above, the agency has observed a seven to ten percent increase in belt usage for seating positions equipped with a lap/shoulder belt rather than just a lap belt. Assuming that the switch to lap/shoulder belts leads to a ten percent increase in belt use, the agency would expect to see the benefits increase to 16 fewer fatalities, 77 fewer AIS 1 injuries, and 202 fewer AIS 2–5 injuries in passenger cars equipped with rear inboard lap/shoulder belts. Likewise, it would expect to see the benefits increase to 17 fewer fatalities, 60 fewer AIS 1 injuries, and 293 fewer AIS 2–5 injuries in LTVs equipped with rear lap/shoulder belts. Most of the reduction in injuries would be in the AIS 2 range. These are injuries that, while not life-threatening, can result in significant financial costs and long-term pain and suffering.

As discussed in the NPRM, this rulemaking seeks to increase the use of belt-positioning booster seats and to improve the safety of all occupants in the inboard rear seating position, regardless of whether the occupant is seated in a booster seat. We believe that today's rule will provide occupants seated in the rear inboard seat position with the same level of safety belt protection as the occupants of other seating positions.

II. Summary of the Proposed Requirements

In the NPRM, NHTSA proposed adopting a requirement for lap/shoulder belts for all designated seating positions other than the inboard front seat for all passenger cars and for most other vehicles with a GVWR of 4,536 kg (10,000 lb) or less and side-facing seats. Side-facing seats that are designated seating positions were proposed to be equipped with a lap belt only. Inboard seating positions in the front seat would not have been required to have a Type 2 belt because the projected benefits, when compared to the cost involved in requiring lap/shoulder belts for this seating position, are so low.

In proposing to require lap/shoulder belts for rear seats, NHTSA tentatively decided to retain some vehicle exceptions to the current rear lap/shoulder provisions contained in FMVSS No. 208. Specifically, rear designated seats in motor homes, walk-in van-type trucks, and vehicles designed to be sold exclusively to the U.S. postal service would be excluded from the rear lap/shoulder belt requirements. The rear seats in LTVs carrying chassis-mount campers with a GVWR greater than 3,855 kg (8,500 lb) and no greater than 4,536 kg (10,000 lb) would need to be equipped with a lap belt only.

We also tentatively decided to require Type 2 belts for rear-facing seats and for forward-facing outboard seats adjacent to an aisle. FMVSS No. 208 currently allows a rear forward-facing outboard seat to be equipped with only a lap belt if that seat is adjacent to an aisle that runs between the seat and the side of the vehicle and is used to gain access to seats rearward of the seat. This exclusion was added to the standard because of the potential ingress/egress problems created by shoulder belts for those more rearward seats and because attaching belt anchorages to the side of the vehicle could cause a lap/shoulder belt to fit its user poorly. With the advent of safety belt technologies like lap/shoulder belts that are integrated into the seat back and ceiling-mounted anchors, we queried whether such an exception was still needed.

In the NPRM, the agency stated that it was not planning on changing the lap/shoulder belt requirements for swivel seats or readily removable seats. Both of these types of seats may have modified lap/shoulder belt assemblies. We noted, however, that such an exception may no longer be needed because of new safety belt designs. As discussed more fully later in this document, we have decided to make some changes to these requirements based, in part, upon industry responses to our request in the NPRM for comments on the continuing need for such exceptions.

[2] A LTV is a vehicle other than a trailer or passenger car designed to carry ten or fewer people. LTVs consist of light trucks, vans and sport utility vehicles.

[3] "Effectiveness of Lap/Shoulder Belts in the Back Outboard Seating Positions," Evaluation Division, Plans and Policy, National Highway Traffic Safety Administration, Washington, D.C. June 1999. DOT HS 808 945.

While not proposing any changes to the current FMVSS No. 208 comfort and convenience requirements and the various barrier tests contained in FMVSS No. 208, we sought comment on whether rear seat requirements should be considered. Since the benefits associated with lap/shoulder belts can only be realized if they are used correctly, the agency queried whether it was appropriate to consider requiring adjustable upper anchorages.

NHTSA anticipated that the addition of a shoulder belt to the rear inboard seating positions in passenger cars and LTVs would prevent between 10 to 33 fatalities and 245 to 632 injuries (AIS 1–5) per year. If all inboard seating positions were equipped with lap/shoulder belts, we estimated that 15 to 49 fatalities and 260 to 804 injuries (AIS 1–5) could be prevented per year in passenger cars and LTVs annually.

In the NPRM, we estimated that approximately 23% of passenger cars and 57.5% of LTVs would need to be equipped with an additional shoulder belt if the final rule were adopted as proposed. Additionally, if NHTSA were to require an inboard lap/shoulder belt for light trucks with only one row of seats, approximately 11 percent (966,128) of the LTV fleet would need to be equipped with an additional lap/shoulder belt.

NHTSA estimated that the net cost of installing the shoulder belt portion of a lap/shoulder belt in the inboard rear seat of a passenger car or LTV would average $15.41. The total net cost associated with replacing lap belts with lap/shoulder belts at rear inboard seating positions was anticipated to be approximately $109 million.

For the purpose of estimating costs, NHTSA assumed that most manufacturers would choose to install lap/shoulder belts that are integrated into the seat back if there were no place to install an upper shoulder belt anchorage along the existing vehicle structure. We estimated the cost of reinforcing the seat back of these seats to be approximately $31.08 per seating position, for a total estimated cost of approximately $109 million.

We anticipated the total cost of the rule would be $218.8 million.

III. Summary of Public Comments

Thirteen comments were submitted in response to the NPRM.[4] Ford Motor Company (Ford), General Motors (GM) and the Alliance of Automobile Manufacturers (Alliance) generally supported the NPRM, but provided insight on the cost and feasibility of lap/shoulder belts integrated into vehicle seat backs, a technology for which the agency specifically requested information. The Recreation Vehicle Industry Association (RVIA) requested that conversion vans be exempted from compliance during the phase-in or that a one year extension of the phase-in period be added. Flexsteel Industries, a seat manufacturer for the conversion van industry, requested that the agency adopt an exception for folding sofa-style seats akin to that currently provided for swivel seats.

Advocates for Highway and Auto Safety (Advocates), Syson-Hille and Associates (Syson-Hille), SafetyBeltSafe U.S.A., and Bidez and Associates generally supported the proposal, but argued that the agency had not sufficiently addressed the safety of children in the rear seat in its notice. The National Automobile Dealers Association (NADA) supported the proposed rule, and urged the agency to adopt a lap/shoulder belt for the front inboard seating position in single row vehicles (*i.e.,* pick-up trucks). NADA also requested that the agency discuss in the preamble to this rule whether retrofit kits and LATCH anchorages would be promoted or considered in future rulemakings. Since this rulemaking does not address LATCH anchorages, this comment will not be discussed further.

IV. Summary of the Final Rule

Today's rule requires Type 2 belts in rear seating positions largely as proposed in the NPRM. However, we have decided to narrow the existing exceptions for removable and swivel seats and for the seating positions located adjacent to an aisle. Based on a survey of the current fleet and submissions by commenters, we believe the exceptions currently in effect are neither needed nor in the best interests of safety. Additionally, we have decided to provide a limited exception for folding seats, a seat design that has become increasingly popular in LTVs and has long been used in station wagons and hatch-backs.

We have decided against requiring Type 2 belts for front inboard seats because the cost associated with such a requirement cannot be justified by the exceptionally low likelihood of occupancy. Manufacturers are welcome to install Type 2 belts at this position voluntarily. Likewise, manufacturers may install Type 2 belts at side-facing seating positions, although only lap belts are required.

We are not granting RVIA's request that manufacturers of conversion vans be provided with an additional year for compliance with today's requirement because the time period for compliance is dictated by statute. Even if this were not the case, the agency believes its accommodation of removable seats is sufficient to address RVIA's concerns.

Finally, as noted earlier, we are placing all phase-in reporting requirements in 49 CFR Part 585, including the new requirements currently located in Part 586 and 597. These two regulations were not in effect when the NPRM was published. A new subpart detailing the phase-in reporting requirements for FMVSS No. 138, *Tire pressure monitoring systems* (TPMS) will be added to Part 585 as part of the TPMS final rule.

V. Requirements of the Final Rule

A. General Requirements

Today's rule requires all rear designated seating positions in motor vehicles with a GVWR of 4,536 kg (10,000 lb) or less, other than side-facing seats, be equipped with a Type 2 belt. The rule applies to both forward-facing and rear-facing seats. For rear-facing seats, a Type 2 belt is unlikely to provide substantially greater benefits than a lap belt in a frontal crash. However, Type 2 belts should reduce the risk of injury in a rear crash and will provide a distinct benefit in all crash modes if actually worn. Since data indicate an increased likelihood that an occupant will wear a Type 2 belt when he or she would not wear a lap belt, this potential for increased usage should not be discounted.

Very few manufacturers produce vehicles with rear-facing seats. However, Ford stated in its comment that both the rear-facing seats in the Volvo station wagon and the Taurus/Sable station wagon are already equipped with lap/shoulder belts at the outboard seating position. These seats, the only rear-facing seats in Ford's fleet of vehicles, do not have an inboard

[4] Two of the comments related to a misunderstanding caused by a typographical error in the notice incorrectly implying that the proposal addressed lap/shoulder belts in small school buses. That error was acknowledged by NHTSA in a letter to Michael Martin of the School Bus Information Council dated February 9, 2004, and NHTSA reiterates here that safety belts on school buses are not affected by today's rule. A third comment, by Honda, addressed a housekeeping matter in the NPRM that was intended to have no substantive change. Specifically, in the NPRM, the agency proposed placing all phase-in reporting requirements in a single part of the Code of Federal Regulations (CFR). Currently, each FMVSS with a phase-in requirement has a corollary part in the CFR specifying the content and form of required phase-in compliance reports. Honda noted minor errors in the proposed regulatory text that are hereby corrected. No further discussion of these three comments is necessary.

seating position. The upper shoulder belt anchorages for these seats are attached to the C-pillar, as are the upper anchorages for the forward-facing seats immediately forward of the rear-facing seats. Other manufacturers installing rear-facing seats should be able to use the same upper anchorage design philosophy as Ford. Ford noted in its comment that the addition of an inboard seating position would require vehicle redesign, most likely in the form of a belt integrated into the seat. To the extent a rear-seat falls within one of the limited exceptions detailed below, that exception is available to the rear-facing seat. Since rear-facing seats typically fold down to create cargo space, a detachable Type 2 belt would likely be permitted for the inboard seating position.

We have decided against extending today's requirements to side-facing seats because we believe the addition of a shoulder belt at this seat position is of limited value, given the paucity of data related to side-facing seats. Aside from two anecdotal cases reported from Syson-Hille in its comment on the NPRM, we are unaware of any reported injuries to belted occupants seated in a side-facing seat. In both of the instances cited by Syson-Hille, the seat was equipped with a lap belt only. Further, requiring Type 2 belts at side-facing seats may not be practicable given that the shoulder belt may not provide restraint in frontal and rear impacts. Again, we lack the data to make such a determination.

We have decided against prohibiting shoulder belts for side-facing seats, a position contemplated in the NPRM, because we are unaware of any demonstrable increase in associated risk. There have been some claims that a shoulder belt increases the risk of neck injury during a frontal collision. The Australian Design Rule ADR 5/04, ''Anchorages for Seatbelts'' has specifically prohibited shoulder belts for side-facing seats since 1975. However, it appears that this prohibition was based on a perceived risk rather than any documented injuries. We note that a study commissioned by the European Commission regarding side-facing seats on minibuses and motor coaches found that the addition of a panel directly in front of a side-facing seat would best protect a restrained occupant in a frontal crash in a manner that would prevent either spool-out from the belt or belt loading against the neck.[5] While such a design may be desirable, the agency presently cannot demonstrate any risk to overall safety sufficient either to prohibit shoulder belts altogether or to require they only be used in conjunction with a compartmentalization feature like a panel.

Likewise, we have decided against requiring Type 2 belts for the front inboard seating position in any vehicles. Both GM and Ford were opposed to adding such a requirement for any vehicles, while Advocates, NADA and SafetyBeltSafe U.S.A. urged that a requirement be adopted at a minimum for vehicles with only a single row of seats.

Assuming a ten percent increase in belt usage based on the presence of a Type 2 belt instead of a lap belt, we estimate that requiring Type 2 belts for the inboard front seat would result in 16 fewer fatalities and 69 fewer injuries (AIS 2–5). If Type 2 belts were required for the front inboard seats in passenger cars and LTVs, the estimated cost per equivalent life saved would be $10.50 million compared to $4.57 million for the rear inboard seats in those vehicles.[6] Part of the reason for the cost disparity is that the inboard seating position of a front seat is only very rarely used. Accordingly, NHTSA does not believe it can justify the cost associated with mandating lap/shoulder belts in the front seat, even when only a single row of seating is available.

In passenger cars and LTVs with more than a single row of seats, front seats with an inboard seating position are typically 60/40 split bench seats which allow 60% of the seat to be adjusted independently of the remaining 40%. GM stated that with such a design it would be difficult to install an integrated safety belt that did not present significant problems with safety belt fit. We note that the rear bench seats on many LTVs also utilize a 60/40 design, yet there appear to be no major problems installing Type 2 belts for the inboard position of these seats. However, independent seat adjustment is likely to be an issue for front seats. Since we have decided against requiring Type 2 belts for front inboard seating positions based on cost considerations, we need not address the issue of whether the potentially unique characteristics of front bench seats preclude effective installation of Type 2 belts for the inboard seating position.

The inboard seating position in pick-up trucks with only a single row of seats potentially raises different practicability problems as the front seat in vehicles with both front and rear seats. GM argued against requiring Type 2 belts for these single row seats, claiming a lap/shoulder belt requirement for these seating positions would require significant strengthening of the vehicle floor or reconfiguration of the rear window. In contrast, Syson-Hille and SafetyBeltSafe U.S.A. noted that several manufacturers already have lap/shoulder belts in the inboard seating position of either single row pick-up trucks or the rear bench seat of trucks with two rows of seats. NHTSA acknowledges the feasibility of installing an inboard lap/shoulder belt in a single row pick-up, particularly when the vehicle does not have a 60/40 bench seat. While some reinforcement of the seat or the back of the cab may be necessary, we do not consider this degree of redesign to be insurmountable. However, we have decided against mandating Type 2 belts for the inboard seating positions of these seats because the safety benefits associated with mandating Type 2 belts in the inboard front seating positions is too small to justify their cost. In part, this is due to the low belt use rate in this position: 12.2 percent. However, we expect manufacturers will continue their practice of voluntarily installing Type 2 belts.

We have also decided to retain the existing exception from FMVSS No. 208's Type 2 belt requirements for motor homes, walk-in vans and postal vehicles. Only Syson-Hille commented on the exception in its entirety, arguing that there was no reason to continue to exempt any vehicles from the belt requirements of the standard. It observed that most manufacturers of the exempted vehicles already install Type 2 belts for the front outboard seats. RVIA and Ford supported retaining the existing exception for motor homes, with RVIA noting the large number of seats in motor homes with multi-functional applications. SafetyBeltSafe U.S.A. was opposed to retaining the exception for motor homes, stating that families are often unaware that the rear seating positions in these vehicles are not required to be equipped with the same belts systems as other vehicles.

While we agree that the Syson-Hille and SafetyBeltSafe U.S.A. comments may have merit, we do not have sufficient information to know the full implications that removing the exemption would have on those seating

[5] This report may be viewed at *http://europa.eu.int/comm/enterprise/automotive/pagesbackground/safetybelts/safety_of_passengers_cranfield.pdf.*

[6] Based on cost ($161.9 million for front inboard seats and $239.8 million for rear inboard seats) divided by equivalent lives saved, discounted at a rate of 7 percent (15.42 for front inboard seats and 52.47 for rear inboard seats).

positions. While the exempted vehicles may already be equipped with Type 2 belts at the front outboard positions, equipping the back seats of these vehicles with a Type 2 belt may present different challenges. The rear seats of these vehicles often have multi-functional or unique applications that may make installation of a Type 2 belt impracticable. Accordingly, we are not making any changes to the exception in today's rule.

B. Allowance for Detachable Type 2 Belts

FMVSS No. 208 currently permits detachable shoulder belts on Type 2 belts installed in the outboard rear seats that are removable and swivel seats. For both of these seat designs, the shoulder belt may be detachable from the lap belt at either the upper or lower anchorage, but not both. A manufacturer may use a push button release similar to releases used for non-detachable belts. While the standard permits detachability of the shoulder portion of the belt, many manufacturers use a ''minibuckle'' design that permits the entire belt to detach from the seat and retract into the upper shoulder anchorage. This design is also used on belt systems currently required to have only a lap belt. This minibuckle design reduces the possibility for misuse since the lap belt is not independently available for use. The regulatory language governing belt detachability for swivel seats is different than that applicable to removable seats because the shoulder portion of the belt is only designed to be used when the seat is in its forward-facing mode and the standard requires that a lap belt be provided for all other seat positions that can be used while the vehicle is in motion. Thus, the minibuckle design does not appear to have an application for swivel seats. Given the advances in safety belt technology, we asked whether it was appropriate to reconsider the detachability allowances for these seats.

In the NPRM, the agency acknowledged that for certain seat designs Type 2 belts could not be installed without integrating the upper shoulder anchorage into the seat back or permitting designs that allow for detachability of the shoulder belt. Because detachable belts can be misused, we were particularly interested in exploring the possibility of integrated belts.

Ford and RVIA opposed any requirement that would have the effect of mandating integrated seat belts at any seating position. Ford noted that the cost associated with strengthening both the seat and the floor pan were significant and that the additional weight added to a seat as a result of this strengthening was sufficient to make removability of the seats impractical. Ford argued that the seats would become so heavy that they could not be readily removed. GM noted that one of its vehicles has a removable seat with an integrated safety belt, but acknowledged that the additional weight could make it more difficult to remove the seat. RVIA's concerns were related to a folding or removable sofa-type bench seat commonly installed in conversion vans. It argued that the cost associated with integrating Type 2 belts into such a seat would be too costly compared to the potential benefits associated with requiring Type 2 belts for this seat design.

The Alliance urged the agency to consider adopting a rule that would expand the existing allowance for detachable shoulder belts to seats beyond those currently permitted under FMVSS No. 208. It noted that manufacturers are moving away from removable seats and towards fold-down designs that permit the seat to be stored in the vehicles. Ford and GM advocated permitting detachable belts for small buses, although Ford's dealerships offer seats with integrated belts as an option on Ford's E-series vans.[7]

We have decided to retain the existing detachability provisions with some revision. Additionally, we have decided to expand the detachability provision to the inboard seating position of folding seats, bus seats, and outboard seats adjacent to an aisle. We believe that integrated belt designs are not an optimal design for all types of seats. They appear to be particularly problematic for removable seats because of the added weight.

We have determined that the minibuckle design commonly found in the rear inboard seat positions of folding seats and in outboard seats adjacent to an aisle can be incorporated into a vehicle at about half the cost of an integrated belt. The cost of installing a shoulder belt in the inboard seat is approximately $16.00 per seat. The cost of strengthening the seat to accommodate the shoulder belt is approximately $31.00. If a detachable belt is used, the cost of the shoulder belt is similar to the previous cost ($16.00). Also, the cost associated with strengthening the roof structure to accommodate the shoulder belt anchorage is approximately $16.00. The total cost for an integrated belt would be approximately $47.00, while the approximate total cost for a detachable belt system would be $32.00.

We will no longer permit a pushbutton design to detach the belt; instead, a key or key-like object must be used to detach the belt. In its comment to the NPRM, the Alliance noted that minibuckle systems often cannot be released via a pushbutton. Rather, an object can be inserted into the buckle through a small hole to release the latch. We believe this design feature reduces the likelihood that the minibuckle will be inadvertently released. Manufacturers may choose to use the door or ignition key since these keys are always likely to be in the driver's possession when the belt needs to be detached. Consistent with our intention to maximize correct use of the belt, there is no provision requiring that a tool be used to reattach the belt. We anticipate that manufacturers will continue to use an attachment mechanism that permits the belt simply to plug into the mated latch.

Additionally, except for swivel seats, we will no longer permit the shoulder belt to be detached independently of the lap belt. We are concerned that an occupant may choose to use only the lap portion or the shoulder portion of the belt if independent detachability is permitted. The performance of shoulder only belts and lap only belts has historically proven to be problematic and is part of the reason we now require Type 2 belts.

These new requirements apply to the belts at all seating positions for which a detachable belt is permitted. Although we did not propose to change the existing requirements for the outboard seating positions, we expressed our opinion that provision for detachability may no longer be warranted and specifically sought comment on whether to continue to permit detachable designs. Based on our review of the existing fleet and comments from vehicle manufacturers, we have determined that the need for detachability still exists, but not in the form presently permitted.

1. Removable Seats

No commenters opposed the retention of the existing detachability allowance for readily removable seats. The detachability allowance was intended to facilitate removal of these seats for cargo carrying purposes. Certainly detachability appears to be the only option for an inboard seating position other than integrated seats; otherwise, the seats could not be removed from the vehicle. As noted above, integrated seat designs add additional weight to the

[7] These seats are manufactured by TDM, an after-market seat supplier.

seat and impose additional costs on manufacturers.

We note that many new LTVs with removable seats do not offer detachable Type 2 belts at the rear outboard seating positions. Instead, the manufacturers have chosen either to use integrated Type 2 belts or to mount the upper and lower shoulder anchorages to the outboard pillars. Thus, while permitting detachability for these seating positions at this time, we plan to monitor the need to retain the detachability allowance for outboard positions on readily removable seats.

We also note that this provision for detachable belts for seating positions on readily removable seats should relieve much of RVIA's and FlexSteel Industry's concerns with sofa-type bench seats since RVIA stated that these seats are generally removable.

2. Folding Seats

While not proposed in the NPRM, we are extending our allowance for detachable Type 2 belts to inboard seating positions on folding seats, as urged by the Alliance. As noted by the Alliance, manufacturers appear to be moving away from removable seats toward seats that can be folded into the floor pan, providing additional cargo carrying capacity. Unlike the inboard seating position on a removable seat, a Type 2 belt that is not integrated into a folding seat can remain attached to the vehicle while the seat is in its stowed position. However, as discussed by the Alliance, prohibiting detachability limits the effective use of the cargo carrying space. This is because the shoulder belt would extend from the upper anchorage down into the folded seat.

Given the increased use of minibuckle designs for the inboard seating positions of folding seats currently in production, we are confident that this type of detachability can resolve the concerns raised by the Alliance while assuring the presence of a Type 2 belt in the inboard seating positions. We have decided against permitting detachable belts at the outboard seating position of these seats because FMVSS No. 208 does not currently have such an allowance and we believe manufacturers can use the roof or side pillars to attach the upper shoulder anchorage. The problems associated with interference of the shoulder belt and cargo are not applicable to outboard seating positions because the shoulder belt will be adjacent to the vehicle's interior paneling.

Rather than adopting the Alliance's suggestion that folding seats be defined as ''seats that can be folded into the floor pan,'' we have defined the term ''folding seat'' to mean any seat which permits the folding of the entire seat back such that no part of the seat back extends more than 10 inches above the highest seating reference point on the seat. Under this definition those sofa-type seats installed in conversion vans would likely qualify as a folding seat, and a minibuckle design could be used at the center seating position.

We believe the suggested wording provided by the Alliance is non-objective and arguably could require that the seat fold completely flat. While folding seats in minivans may fold completely flat, those on station wagons and smaller SUVs generally fold at a slight angle. We believe detachability should be limited to those circumstances in which the cargo carrying capacity of the vehicle would otherwise be adversely affected. The slight angle in the folding seat design of these vehicles does not impair the cargo carrying capacity of the vehicle when the seat is in its folded position. Given the width of the seat back structure, we believe the 10-inch allowance will accommodate these seats without creating a definition of a folding seat with near universal applicability. We have decided to measure from the highest seating reference point because a seat may have different seating reference points among its different designated seating positions.

We acknowledge the Alliance's comment that many sedans have rear seat designs that permit part, but not all of the seat back to fold down to accommodate long, narrow cargo such as skis. If the seat design is such that the entire seat cannot be folded down, we believe the vehicle should have sufficient structure behind the rear seat to anchor the upper shoulder belt anchorage. Accordingly, no provision for detachability is needed.

3. Seats Located Adjacent to an Aisle

Currently, rear outboard seats located adjacent to an aisle are permitted to have only a lap belt. We have decided to require these seats be equipped with a Type 2 belt because we believe the belt technologies currently used for these seating positions demonstrate the feasibility of a Type 2 design. GM has provided Type 2 belts for this type of seat since 1991. The GM system uses the same type of minibuckle design discussed above. Ford also provides a Type 2 belt for its seats located adjacent to an aisle. Ford did not provide information on whether its belts were detachable, but urged the agency to adopt a detachability allowance.

NHTSA has long recognized that belts installed at seating positions located adjacent to an aisle can impede ready access to or egress from seats located behind them. This is why we originally allowed lap belts at these seating positions. While recognizing the benefit of a Type 2 belt over a lap belt, we believe there is a need for Type 2 belts at this seating position to be detachable. Accordingly, we are adopting a detachability allowance for these seating positions.

4. Bus Seats

In the NPRM, the agency proposed to require Type 2 belts in all rear designated seating positions of buses with a GWVR of 4,536 kg (10,000 lb) or less. These small buses are primarily 12- and 15-passenger vans. We specifically sought comment on potential benefits and disadvantages associated with such a requirement, as well as potential technological impediments. Based on the comments, we have decided to require Type 2 belts, but to permit detachability.

We received four comments addressing the proposed requirement, all of them supportive. Syson-Hille and SafetyBeltSafe U.S.A. noted that 12- and 15-passenger vans are often used by child care facilities and church groups to transport children. Given this use, they believe it is important to require a Type 2 belt for these seats. Syson-Hille also pointed out that the European Union requires all buses manufactured since 1999 to have either Type 2 belts or lap belt with energy-absorbing seats. To meet a Type 2 belt requirement for small buses, both Ford and GM suggested that integrated belts would be required. While integrated seats might require additional seat and floor structure for an integrated belt design, GM stated that there was no technological impediment to an integrated belt design. Syson-Hille noted that the Mercedes mini-bus sold in Europe has integrated Type 2 belts for every rear designated seating position.

While it appears that integrated belts may be the best technological solution for Type 2 belts in buses, we have decided to permit detachability for inboard designated seating positions on buses, regardless of whether the seats are removable, may be folded, or are adjacent to an aisle.[8] For vehicles with

[8] While Ford stated in its comments that body-mounted belts pose a risk to other occupants in a crash, it did not provide a basis for this statement. We are puzzled as to why this risk would present itself in a bus but not in a LTV. Because we believe body-mounted belts can be safely mounted in buses, we are not extending the detachability

Continued

multiple rear inboard seating positions (*i.e.*, three or more), the cost of equipping those seating positions with detachable belts is considerably less than that necessary to accommodate seat back and floor pan reinforcements associated with integrated belts. Thus, it is appropriate to provide sufficient flexibility to permit bus manufacturers to install Type 2 belts in a manner that accommodates different floor structure designs and interior architectures.

5. Swivel Seats

Currently, FMVSS No. 208 specifies that seats that can be adjusted to be forward-facing and to face in some other direction (*e.g.*, swivel seats) must have at least a lap belt at all positions in which the seat may be placed while the vehicle is in motion. Additionally, the seat must have a Type 2 belt that is usable while the seat is in its forward-facing position. The shoulder portion of the Type 2 belt may be detachable from the lap portion, thus requiring only a single belt design to accommodate all potential seating positions. The standard also permits readily removable seats to have a shoulder belt that may be detached at either the upper or lower shoulder belt anchorage, but not both.

In the NPRM, we sought comment on whether there was any reason to retain this exception, given the availability of integrated Type 2 belt designs. It appears that swivel seats are only used in the conversion van industry and in vehicles altered or modified for persons with disabilities. Only RVIA was able to provide any opinion on the cost associated with Type 2 belts and swivel seats. However, it was unable to provide any cost estimates on integrated belts since they are not used by the conversion van industry. The belts currently used for these seats were developed at a time when the conversion van industry was much larger than it is now, and it was in a better position to spread the cost associated with product development among a much larger industry. Accordingly, we believe the development costs associated with developing swivel seats that have a Type 2 belt integrated into the seat are likely to be too large for the industry to withstand.

Nevertheless, we do have concerns about the degree of detachability currently permitted for these seats under FMVSS No. 208. We believe that the belts for swivel seats should provide the same level of protection as the belts for other seats. The current requirements provide the occupant with the option of using a Type 2 belt when the seat is facing forward. However, these requirements are inconsistent with the new requirement that rear-facing seats be equipped with a Type 2 belt. Accordingly, we have amended the provision for belt detachability for swivel seats to require a Type 2 belt when the seat is positioned in either the forward or rear-facing mode (including any position ± 30 degrees from the forward-or rearward-facing mode), and a lap belt when positioned in all other modes that can be used while the vehicle is in motion.

VI. Phase-In of the New Requirements

Anton's Law requires that NHTSA issue a final rule not later than December 2004. It further specifies that the final rule be implemented, in stages, starting not later than September 1, 2005, and be fully implemented no later than September 1, 2007. Thus, the rule will be phased-in between September 1, 2005 and September 1, 2007. We did not receive any comments on the proposed phase-in schedule, other than a request by RVIA that conversion vans be given an additional year for compliance. Accordingly, we are adopting the following phase-in schedule as proposed in the NPRM:

- *MY 2006* (September 1, 2005 through August 31, 2006): 50 percent of all vehicles that are produced by manufacturers and are subject to the phase-in must comply. Advance credits for early compliance may be used on a one-to-one basis.
- *MY 2007* (September 1, 2006 through August 31, 2007): 80 percent of all vehicles that are produced by manufacturers and are subject to the phase-in must comply. Advance credits may be used on a one-to-one basis.
- *MY 2008 and beyond (on or after September 1, 2007):* all vehicles, regardless of whether they are subject to the phase-in, must comply. No advance credits may be used.

The phase-in schedule for this rulemaking is dictated by statute. Thus, NHTSA does not have the authority to provide manufacturers of conversion vans an additional year to certify compliance with the new requirements, as requested by RVIA. However, as proposed in the NPRM, we have decided against applying the phase-in requirements to manufacturers of fewer than 5,000 vehicles produced for the U.S. market each year, manufacturers of incomplete vehicles, and alterers. No comments were submitted objecting to the agency's proposal to excuse them during the phase-in. We believe a phase-in that commences so soon after publication of the final rule presents a hardship for these manufacturers. Accordingly, these manufacturers need only assure that their vehicles comply with today's requirements by September 1, 2007.

As noted in the NPRM, final-stage manufacturers have no control over the vehicles that the previous-stage manufacturer decides to modify to meet the phase-in requirements. Accordingly, the final-stage manufacturer may have little or no choice in purchasing an incomplete vehicle that meets the requirements of the proposed rule. While alterers have more control, since they are only purchasing completed vehicles, they may have limited control over purchasing completed, certified vehicles in a manner that would allow them to meet the phase-in requirements. The final-stage manufacturers and alterers most likely to be affected by today's rule are those who manufacture conversion vans. Removal and replacement of existing seats is one of the most common modifications of these vehicles. Thus, the existence in the market of vehicles certified to today's requirement is largely irrelevant since the seats equipped with the required belts are likely to be removed as part of the conversion. If an alterer removes a seat supplied by the original vehicle manufacturer, the alterer must replace it with a seat equipped with a Type 2 belt. We do not believe it is unreasonable to provide final-stage manufacturers and alterers with the maximum permissible time to locate seats and seat belt assemblies that comply with today's requirements. Accordingly, all multi-stage and altered vehicles manufactured on or after September 1, 2007 must be certified as complying with the new requirements. We have also decided to exclude small volume manufacturers (*i.e.*, manufacturers of less than 5,000 vehicles per year produced for the U.S. market) from the phase-in because of their small size.

As proposed, we have decided to allow manufacturers of two or fewer carlines to opt out of the first year of the phase-in as long as 100% of their vehicles are certified as complying with the new requirements during the second year of the phase-in. NHTSA notes that, unlike the advanced air bag or tire pressure monitor system rulemakings, in which the technologies used to comply with the standard are relatively new, the technologies for lap/shoulder belts are well established. Accordingly, these manufacturers are unlikely to face the supply-and-demand problems in this rulemaking anticipated in the advanced air bag or tire pressure

allowance to outboard seats on buses unless they are adjacent to an aisle. This approach is consistent with the rest of today's rule.

monitor system rulemakings. For this reason, NHTSA has decided against allowing these manufacturers to claim advanced credits for that second year. We believe it is unlikely that such credits would be needed.

The regulatory text addressing the phase-in reporting requirements gathers together the phase-in requirements for all safety standards being phased-in and places them in a single part of the Code of Federal Regulations, 49 CFR Part 585. This will allow people henceforth to look to a single source for all reporting requirements associated with phase-ins.

VII. Other Issues

In the NPRM, we sought comment on three issues unrelated to the adoption of a Type 2 belt requirement. We asked for comment because these three areas are ones which have been raised with the agency. Dependent on the public's response, we could choose to initiate rulemaking.

The first area of interest was the comfort and convenience test procedures for rear designated seating positions. No commenters saw any need to revise the existing requirements for comfort and convenience. While some commenters believed the existing requirements were sufficient, others argued that market forces would dictate comfort. Based on the comments, we see no need to further address comfort and convenience issues at this time.

Second, NHTSA sought information on seat belt fit studies conducted on rear seat occupants of varying size and stature and the results of any dynamic testing of any adjustable seat belt anchorages at different anchorage adjustments. We requested this information to determine the appropriateness of requiring adjustable anchorages for rear lap/shoulder belts. The Alliance commented that, over the past several years, it has been involved in a technical working group to develop voluntary best practices on seat belt fit. Transport Canada has also been involved in the working group. While the working group has been concentrating on front seats, Transport Canada has asked that it also work toward the development of criteria for the rear seat. No one offered any studies or data reflecting seat belt fit or the performance of adjustable seat belt anchorages in dynamic crash tests, although SafetyBeltSafe U.S.A. argued for the adoption of adjustable upper anchorages in rear seats. NHTSA, however, has been conducting its own research on safety belt fit in response to section 3(b)(2) of Anton's Law. Section 3(b)(2) requires NHTSA to consider whether to establish performance requirements for seat belt fit when used with booster seats and other belt guidance devices. The results of this research could lead the agency to pursue rulemaking in this area in the future.

Our final area of interest was whether there was a need to extend the frontal impact crash test requirements of FMVSS No. 208 to the rear seating positions. The Alliance, RVIA and Ford all opposed extending the dynamic crash test requirements, arguing that it is ''universally known'' that the rear seat is the safest seating location in a vehicle. Syson-Hille, Bidez and Associates, and SafetyBeltSafe U.S.A. all advocated for the adoption of requirements that would assess the injury potential of occupants of all ages and sizes in a dynamic environment.

While dynamic testing in the rear seat is beyond the scope of this rulemaking, we note that we have two research programs that involve dynamic crash testing with rear seat occupants. The agency is running various types of child restraint systems in its frontal New Car Assessment Program (NCAP) tests. Results from those tests are being analyzed to determine whether such testing would provide meaningful consumer information. The second research program has focused on studying rear integrated seat performance in a dynamic crash test environment. This research has been expanded to evaluate and compare the performance of non-integrated seat belts and rear outboard seats for different sized occupants. Once this research program is completed, we expect to be in a better position to evaluate the need to further upgrade the rear seat belt requirements of FMVSS No. 208.

NADA asked that the preamble to this rule discuss whether the agency intends to promote retrofit shoulder belt kits for existing vehicles and whether we intend to commence rulemaking to require LATCH systems for rear inboard seats. We do not intend to promote retrofit shoulder belt kits because we do not believe there is sufficient demand for such kits. Manufacturers are, of course, free to offer such kits if they desire. When first amending FMVSS No. 208 to require Type 2 belts in the rear outboard seating positions, the agency did actively promote retrofit kits. However, we discovered that consumer demand was exceptionally low. We have been told by at least one manufacturer that it ended up with several hundred unwanted kits. Based on that experience, we see no value in promoting such kits again. Additionally, most passenger cars and approximately half of the LTV fleet already have Type 2 belts at the rear inboard designated seating position. Accordingly, the need for such kits is less now than it was in the early 1990s when the original rear lap/shoulder belt provisions were adopted.

VIII. Costs and Benefits Associated With the Final Rule

As noted earlier in this document, we anticipate that today's rule will result in 5 to 16 fewer fatalities and 111 to 202 fewer injuries (AIS 2–5) per year in passenger cars and 5 to 17 fewer fatalities and 134 to 293 fewer injuries (AIS 2–5) per year in LTVs. The reason for providing a range of numbers is that the lower numbers reflect anticipated benefits if the addition of a shoulder belt has no impact on increased belt use, while the higher numbers assume a 10 percent increase in belt use due to the presence of a shoulder belt.

TABLE 1.—ESTIMATED LIVES SAVED BY LAP/SHOULDER BELT AT REAR INBOARD SEATING POSITION

	Incremental benefits of lap/shoulder belt compared to lap belt at current belt use rate	Incremental benefits of lap/shoulder belt compared to lap belt with 10% increase in belt use
Passenger Cars	5	16
Light Trucks	5	17
Total	10	33

While no specific benefits have been estimated for 12- and 15-passenger vans, safety benefits are expected given that belt use is critical in these types of vehicles, particularly in rollover crashes. At 14%, restraint use among fatally injured occupants in single vehicle crashes among all vehicles with a GVWR of 10,000 or less is the lowest in 15-passenger vans. Restraint use in these crashes in passenger cars is 30%; restraint use in sport utility vehicles is 25%; restraint use in other vans is 26%; and restraint use in pickups is 18%. An unrestrained occupant in a 15-passenger van is about four times as likely to be ejected from the van as is a properly restrained occupant.[9]

The total cost of complying with today's rule will vary depending on how manufacturers choose to design belts that cannot be attached to existing vehicle structures without some modification. Today's rule permits two options for removable and folding seats, as well as for swivel seats and seats located adjacent to an aisle. If manufacturers choose to comply with today's requirements using integrated seat belt designs, we estimate that the associated cost of compliance for the passenger car fleet will be approximately $40.64 million. For the LTV fleet that cost is estimated at $199.21 million. If manufacturers choose to comply with today's requirements using detachable seat belt designs, we estimate the associated cost of compliance for the passenger car fleet will drop to $36.12 million, with an associated cost for the LTV fleet of $142.73 million. It is likely that manufacturers will choose between the two options depending on vehicle characteristics and perceived customer desires. Thus, the anticipated total cost of the rule would fall somewhere between $178.85 million and $239.86 million (in year 2000 economics).

Assessing the cost of today's rule in terms of cost per equivalent life saved provides an indication of the cost associated with improving the entire fleet of vehicles to reduce the risk of injury or death to those individuals involved in a crash where the lack of a lap shoulder belt in the inboard rear seating positions would otherwise lead to injury or death.

Assuming all manufacturers choose to meet the requirements of today's rule using traditional belt designs where possible and integrated seat belts where needed, the cost of the rule per equivalent life saved for passenger cars discounted at 3% and 7%, is $1.57 million and $1.92 million, respectively, while the discounted cost for LTVs is $4.99 million and $6.36 million respectively.

Assuming, on the other hand, that all manufacturers use detachable belts rather than integrated belts, the cost per equivalent life saved drops. For passenger cars the cost per equivalent life saved is $1.40 million at a 3% discount rate and $1.7 million at a 7% discount rate. For LTVs the respective numbers are $3.58 million and $4.56 million per equivalent life saved.

We have also conducted a benefit-cost analysis to determine whether the cost of today's rule outweighs the associated benefit. In terms of assessing overall benefit over cost, a positive number indicates that the benefits outweigh the associated cost, while a negative number indicates that the requirement will cost more than the associated benefit. In order to conduct a cost benefit analysis, we took the equivalent lives saved and multiplied it by a generic value of life, in this instance $3.5 million.[10] From the product of these two figures, we then subtract the cost of today's rule. Thus, for passenger cars, the net benefit associated for today's rule is $49.88 and $33.65 million, discounted at 3% and 7%, respectively, if all manufacturers use integrated belts where needed. The benefit for passenger cars if detachable belts are used is somewhat higher at $54.38 and $38.15 million, discounted at 3% and 7%, respectively. For the LTV fleet, the benefit associated with today's rule is substantially smaller. If only integrated belts are used where traditional belts systems are impractical, the benefits associated with today's rule never exceed the associated cost for the LTV fleet, at −$59.47 million (3% discount), and −$89.64 million (7% discount). Using detachable belts where needed results in a smaller disbenefit with a 3% discount value of $3.27 million and a 7% discount value of $33.44 million.

IX. Rulemaking Analyses and Notices

A. Executive Order 12866 and DOT Regulatory Policies and Procedures

NHTSA has considered the impact of this rulemaking action under Executive Order 12866 and the Department of Transportation's regulatory policies and procedures. This rulemaking is economically significant. Accordingly, the Office of Management and Budget has reviewed this rulemaking document under E.O. 12866, ''Regulatory Planning and Review.'' The rulemaking action has also been determined to be significant under the Department's regulatory policies and procedures. The benefits and costs associated with today's rule have been briefly discussed earlier in this document. For a more detailed analysis, please refer to section VII of this notice and the final economic analysis supporting today's final rule.

B. Regulatory Flexibility Act

We have considered the effects of this rulemaking action under the Regulatory Flexibility Act (5 U.S.C. 601 *et seq.*) NHTSA has determined that this action will not have a significant economic impact on a substantial number of small entities. The vast majority of affected motor vehicle manufacturers are not small businesses. Small organizations and small governmental units are not significantly affected by the final rule since the potential cost impacts associated with it should only slightly increase the price of new motor vehicles. A more complete analysis of the impact of today's rule on small businesses, organizations, and governmental units may be found in the final economic analysis.

C. National Environmental Policy Act

NHTSA has analyzed this amendment for the purposes of the National Environmental Policy Act and determined that it will not have any significant impact on the quality of the human environment.

D. Executive Order 13132 (Federalism)

The agency has analyzed this rulemaking in accordance with the principles and criteria contained in Executive Order 13132 and has determined that it does not have sufficient federalism implications to warrant consultation with State and local officials or the preparation of a federalism summary impact statement. The final rule has no substantial effect on the States, or on the current Federal-State relationship, or on the current distribution of power and responsibilities among the various local officials. The final rule is not intended to preempt state tort civil actions, except to the extent that the agency has specifically determined that detachable Type 2 belts meeting the requirements of this rule are permissible for vehicle seats specifically permitted to be equipped with detachable Type 2 belts.

E. Unfunded Mandates Reform Act

The Unfunded Mandates Reform Act of 1995 requires agencies to prepare a

[9] *Analysis of Crashes Involving 15-Passenger Vans,* NHTSA Technical Report, DOT HS 809 735, May 2004.

[10] While we recognize that the value of human life cannot be measured in absolute terms, this amount represents a constant value needed to conduct a mathematical analysis.

written assessment of the costs, benefits and other effects of proposed or final rules that include a Federal mandate likely to result in the expenditure by State, local or tribal governments, in the aggregate, or by the private sector, of more than $100 million annually (adjusted for inflation with base year of 1995). This results in a value of $109 million in year 2000 economics. The final rule requires the expenditure of resources above and beyond $109 million annually. NHTSA has explored various options based on the response to the public comments. We have determined that the cost associated with requiring Type 2 belts that integrated into the seat are unreasonably expensive and that the safety need addressed by this rulemaking can be more inexpensively achieved by permitting limited detachability of the Type 2 belts for certain seat designs.

F. Executive Order 12778 (Civil Justice Reform)

The final rule does not have any retroactive effect. Under section 49 U.S.C. 30103, whenever a Federal motor vehicle safety standard is in effect, a state may not adopt or maintain a safety standard applicable to the same aspect of performance which is not identical to the Federal standard, except to the extent that the state requirement imposes a higher level of performance and applies only to vehicles procured for the State's use. 49 U.S.C. 30161 sets forth a procedure for judicial review of final rules establishing, amending or revoking Federal motor vehicle safety standards. That section does not require submission of a petition for reconsideration or other administrative proceedings before parties may file suit in court.

G. Paperwork Reduction Act

Under the Paperwork Reduction Act of 1995, a person is not required to respond to a collection of information by a Federal agency unless the collection displays a valid OMB control number. This rule contains a collection of information because of the phase-in reporting requirements. The purpose of the reporting requirements is to aid NHTSA in determining whether a manufacturer has complied with the requirements of FMVSS No. 208 during the phase-in of those requirements. There is no burden to the general public.

We have submitted a request for OMB clearance of the collection of information required under today's final rule. These requirements and our estimates of the burden to vehicle manufacturers are as follows:

- NHTSA estimates there are 21 manufacturers of passenger cars, multipurpose passenger vehicles, trucks, and buses having a GVWR of 4,536 kg (10,000 lb) or less.
- NHTSA estimates that the total annual reporting and recordkeeping burden resulting from the collection of information is 1,260 hours.
- NHTSA estimates that the total annual cost burden, in U.S. dollars, will be $0.00. No additional resources will be expended by vehicle manufacturers to gather annual production information because they already compile this data for their own use.

Organizations and individuals that wish to submit comments on the information collection requirements should direct them within 30 days to the Office of Information and Regulatory Affairs, OMB, Room 10235, New Executive Office Building, Washington, D.C. 20503; Attention Desk Officer for NHTSA. Please fax the comments to: (202) 395–6974.

H. Executive Order 13045

Executive Order 13045 applies to any rule that: (1) Is determined to be ''economically significant'' as defined under E.O. 12866, and (2) concerns an environmental, health or safety risk that NHTSA has reason to believe may have a disproportionate effect on children. If the regulatory action meets both criteria, we must evaluate the environmental health or safety effects of the planned rule on children, and explain why the planned regulation is preferable to other potentially effective and reasonably feasible alternatives considered by us.

As noted earlier, this rulemaking is economically significant. Additionally, it is expected to have a disproportionate effect on children, since children are most likely to sit in the rear seat. However, the impact of this rulemaking on children will be beneficial instead of detrimental.

I. National Technology Transfer and Advancement Act

Section 12(d) of the National Technology Transfer and Advancement Act (NTTAA) requires NHTSA to evaluate and use existing voluntary consensus standards [11] in its regulatory activities unless doing so would be inconsistent with applicable law (*e.g.*, the statutory provisions regarding NHTSA's vehicle safety authority) or otherwise impractical. In meeting that requirement, we are required to consult with voluntary, private sector, consensus standards bodies. Examples of organizations generally regarded as voluntary consensus standards bodies include the American Society for Testing and Materials (ASTM), the Society of Automotive Engineers (SAE), and the American National Standards Institute (ANSI). If NHTSA does not use available and potentially applicable voluntary consensus standards, we are required by the Act to provide Congress, through OMB, an explanation of the reasons for not using such standards. NHTSA has searched the voluntary consensus standards generally applicable to the manufacture of motor vehicles and is unaware of any standards relevant to this rule. No comments were received indicating that there were applicable standards that the agency failed to address.

[11] Voluntary consensus standards are technical standards developed or adopted by voluntary consensus standards bodies. Technical standards are defined by the NTTAA as ''performance-based or design-specific technical specifications and related management systems practices.'' They pertain to ''products and processes, such as size, strength, or technical performance of a product, process or material.''

J. Plain Language

Executive Order 12866 requires each agency to write all rules in plain language. Today's rule has been written with that directive in mind, although FMVSS No. 208, in general, is a complicated regulation. We note that some of the requirements adopted today are technical in nature. As such, they may require some understanding of technical terminology. We expect those parties directly affected by today's rule, *i.e.*, vehicle manufacturers, to be familiar with such terminology.

K. Regulation Identifier Number (RIN)

The Department of Transportation assigns a regulation identifier number (RIN) to each regulatory action listed in the Unified Agenda of Federal Regulations. The Regulatory Information Service Center publishes the Unified Agenda in April and October of each year. You may use the RIN contained in the heading at the beginning of this document to find this action in the Unified Agenda.

In consideration of the foregoing, NHTSA amends 49 CFR Chapter V as follows:

List of Subjects in 49 CFR Parts 571, 585, 586, 589, 590, 596 and 597

Imports, Motor vehicle safety, Reporting and recordkeeping requirements, Tires.

PART 571—FEDERAL MOTOR VEHICLE SAFETY STANDARDS

■ 1. The authority citation for part 571 of title 49 continues to read as follows:

Authority: 49 U.S.C. 322, 30111, 30115, 30117, 30166 delegation of authority at 49 CFR 1.50.

■ 2. Section 571.201 is amended by revising S6.1.6.2 to read as follows:

§ 571.201 Standard No. 201; Occupant protection in interior impact.

* * * * *

S6.1.6.2 A vehicle produced by more than one manufacturer must be attributed to any one of the vehicle's manufacturers specified by an express written contract, reported to the National Highway Traffic Safety Administration under 49 CFR Part 585, between the manufacturer so specified and the manufacturer to which the vehicle would otherwise be attributed under S6.1.6.1.

* * * * *

■ 3. Section 571.208 is amended by adding S4.1.5.5, S4.1.5.5.1, S4.1.5.5.2, S4.2.7, S4.2.7.1 through S4.2.7.6, S4.4.5, S4.4.5.1, S4.4.5.2, S4.5.5, and S4.5.5.1 through S4.5.5.4 as follows:

§ 571.208 Standard No. 208; Occupant crash protection.

* * * * *

S4.1.5.5 *Passenger cars manufactured on or after September 1, 2007.*

S4.1.5.5.1 Except as provided in S4.1.5.5.2, each passenger car shall have a Type 2 seat belt assembly that conforms to Standard No. 209 and to S7.1 and S7.2 of this standard at each rear designated seating position, except that side-facing designated seating positions shall have a Type 1 or Type 2 seat belt assembly that conforms to Standard No. 209 and to S7.1 and S7.2 of this standard.

S4.1.5.5.2 Any inboard designated seating position on a seat for which the entire seat back can be folded (including the head restraints and any other part of the vehicle attached to the seat back) such that no part of the seat back extends above a horizontal plane located 250 mm above the highest SRP located on the seat may meet the requirements of S4.1.5.5.1 by use of a belt incorporating a release mechanism that detaches both the lap and shoulder portion at either the upper or lower anchorage point, but not both. The means of detachment shall be a key or key-like object.

* * * * *

S4.2.7 *Rear seating positions in trucks, and multipurpose passenger vehicles manufactured on or after September 1, 2007 with a GVWR of 10,000 lbs. (4,536 kg) or less.*

S4.2.7.1 Except as provided in S4.2.7.2, S4.2.7.3, S4.2.7.4, S4.2.7.5, and S4.2.7.6, each truck and each multipurpose passenger vehicle, other than a motor home, a walk-in van-type truck, or a vehicle designed to be sold exclusively to the U.S. Postal Service with a GVWR of 10,000 lbs. (4,536 kg) or less, or a vehicle carrying chassis-mount camper with a gross vehicle weight rating of 8,500–10,000 lbs. (3,855–4,536 kg), shall be equipped with a Type 2 seat belt assembly at every rear designated seating position other than a side-facing position, except that Type 2 seat belt assemblies installed in compliance with this requirement shall conform to Standard No. 209 (49 CFR 571.209) and with S7.1 and S7.2 of this standard. If a Type 2 seat belt assembly installed in conformity to this requirement incorporates any webbing tension-relieving device, the vehicle owner's manual shall include the information specified in S7.4.2(b) of this standard for the tension relieving device, and the vehicle shall conform to S7.4.2(c) of this standard. Side-facing designated seating positions shall be equipped, at the manufacturer's option, with a Type 1 or Type 2 seat belt assembly that conforms with S7.1 and S7.2 of this standard.

S4.2.7.2 Any rear designated seating position with a seat that can be adjusted to be forward-or rear-facing and to face some other direction shall either:

(a) Meet the requirements of S4.2.7.1 with the seat in any position in which it can be occupied while the vehicle is in motion; or

(b) When the seat is in its forward-facing and/or rear-facing position or within ± 30 degrees of either position, have a Type 2 seat belt assembly with an upper torso restraint that conforms to S7.1 and S7.2 of this standard and that adjusts by means of an emergency locking retractor that conforms to Standard No. 209 (49 CFR 571.209), which upper torso restraint may be detachable at either the buckle or the upper anchorage, but not both, and, when the seat is in any other position in which it can be occupied while the vehicle is in motion, have a Type 1 seat belt or the pelvic portion of a Type 2 seat belt assembly that conforms to S7.1 and S7.2 of this standard.

S4.2.7.3 Any rear designated seating position on a readily removable seat (i.e., a seat designed to be easily removed and replaced by means installed by the manufacturer for that purpose) may meet the requirements of S4.2.7.1 by use of a belt incorporating a release mechanism that detaches both the lap and shoulder portion at either the upper or lower anchorage point, but not both. The means of detachment shall be a key or key-like object.

S4.2.7.4 Any inboard designated seating position on a seat for which the entire seat back can be folded such that no part of the seat back extends above a horizontal plane located 250 mm above the highest SRP located on the seat may meet the requirements of S4.2.7.1 by use of a belt incorporating a release mechanism that detaches both the lap and shoulder portion at either the upper or lower anchorage point, but not both. The means of detachment shall be a key or key-like object.

S4.2.7.5 Any rear designated seating position adjacent to a walkway located between the seat and the side of the vehicle, which walkway is designed to allow access to more rearward designated seating positions may meet the requirements of S4.2.7.1 by use of a belt incorporating a release mechanism that detaches both the lap and shoulder portion at either the upper or lower anchorage point, but not both. The means of detachment shall be a key or key-like object.

S4.2.7.6 Any rear side-facing designated seating position shall have a Type 1 or Type 2 seat belt assembly that conforms to S7.1 and S7.2 of this standard.

* * * * *

S4.4.5 *Buses with a GVWR of 10,000 lbs. (4,536 kg) or less manufactured on or after September 1, 2007.*

S4.4.5.1 Except as provided in S4.4.5.2, S4.4.5.3, S4.4.5.4, S4.4.5.5 and S4.4.5.6 each bus with a gross vehicle weight rating of 10,000 lbs. (4,536 kg) or less shall be equipped with a Type 2 seat belt assembly at every designated seating position other than a side-facing position. Type 2 seat belt assemblies installed in compliance with this requirement shall conform to Standard No. 209 (49 CFR 571.209) and with S7.1 and S7.2 of this standard. If a Type 2 seat belt assembly installed in compliance with this requirement incorporates a webbing tension relieving device, the vehicle owner's manual shall include the information specified in S7.3.1(b) of this standard for the tension relieving device, and the vehicle shall conform to S7.4.2(c) of this standard. Side-facing designated seating positions shall be equipped, at the manufacturer's option, with a Type 1 or Type 2 seat belt assembly.

S4.4.5.2 Any rear designated seating position with a seat that can be adjusted to be forward- or rear-facing and to face some other direction shall either:

(a) Meet the requirements of S4.4.5.1 with the seat in any position in which it can be occupied while the vehicle is in motion; or

(b) (1) When the seat is in its forward-facing and/or rear-facing position, or

within ± 30 degrees of either position, have a Type 2 seat belt assembly with an upper torso restraint that

(i) Conforms to S7.1 and S7.2 of this standard,

(ii) Adjusts by means of an emergency locking retractor conforming to Standard No. 209 (49 CFR 571.209), and

(iii) May be detachable at the buckle or upper anchorage, but not both, and

(2) When the seat is in any position in which it can be occupied while the vehicle is in motion, have a Type 1 seat belt or the pelvic portion of a Type 2 seat belt assembly that conforms to S7.1 and S7.2 of this standard.

S4.4.5.3 Any rear designated seating position on a readily removable seat (that is, a seat designed to be easily removed and replaced by means installed by the manufacturer for that purpose) may meet the requirements of S4.4.5.1 by use of a belt incorporating a release mechanism that detaches both the lap and shoulder portion at either the upper or lower anchorage point, but not both. The means of detachment shall be a key or key-like object.

S4.4.5.4 Any inboard designated seating position on a seat for which the entire seat back can be folded such that no part of the seat back extends above a horizontal plane located 250 mm above the highest SRP located on the seat may meet the requirements of S4.4.5.1 by use of a belt incorporating a release mechanism that detaches both the lap and shoulder portion at either the upper or lower anchorage point, but not both. The means of detachment shall be a key or key-like object.

S4.4.5.5 Any rear designated seating position adjacent to a walkway located between the seat, which walkway is designed to allow access to more rearward designated seating positions, and not adjacent to the side of the vehicle may meet the requirements of S4.4.5.1 by use of a belt incorporating a release mechanism that detaches both the lap and shoulder portion at either the upper or lower anchorage point, but not both. The means of detachment shall be a key or key-like object.

S4.4.5.6 Any rear side-facing designated seating position shall have a Type 1 or Type 2 seat belt assembly that conforms to S7.1 and S7.2 of this standard.

* * * * *

S4.5.5 *Rear seat belt requirements for passenger cars and for trucks, buses, and multipurpose passenger vehicles with a GVWR of 4,536 kg (10,000 lbs.) or less.*

S4.5.5.1 *Vehicles manufactured on or after September 1, 2005 and before September 1, 2007.*

(a) For vehicles manufactured for sale in the United States on or after September 1, 2005, and before September 1, 2007, a percentage of the manufacturer's production as specified in S4.5.5.2, shall meet the requirements specified in either S4.1.5.5 for complying passenger cars, S4.2.7 for complying trucks and multipurpose passenger vehicles, or S4.4.5 for complying buses.

(b) A manufacturer that sells two or fewer carlines, as that term is defined at 49 CFR 583.4, in the United States may, at the option of the manufacturer, meet the requirements of this paragraph, instead of paragraph (a) of this section. Each vehicle manufactured on or after September 1, 2006, and before September 1, 2007, shall meet the requirements specified in S4.1.5.5 for complying passenger cars, S4.2.7 for complying trucks & multipurpose passenger vehicles, and S4.4.5 for complying buses. Credits for vehicles manufactured before September 1, 2006 are not to be applied to the requirements of this paragraph.

(c) Vehicles that are manufactured in two or more stages or that are altered (within the meaning of 49 CFR 567.7) after having previously been certified in accordance with part 567 of this chapter are not subject to the requirements of S4.5.5.1.

(d) Vehicles that are manufactured by a manufacturer that produces fewer than 5,000 vehicles annually for sale in the United States are not subject to the requirements of S4.5.5.1.

S4.5.5.2 *Phase-in schedule.*

(a) *Vehicles manufactured on or after September 1, 2005, and before September 1, 2006.* Subject to S4.5.5.3(a), for vehicles manufactured on or after September 1, 2005, and before September 1, 2006, the amount of vehicles complying with S4.1.5.5 for complying passenger cars, S4.2.7 for complying trucks and multipurpose passenger vehicles, or S4.4.5 for complying buses shall be not less than 50 percent of:

(1) If the manufacturer has manufactured vehicles for sale in the United States during both of the two production years immediately prior to September 1, 2005, the manufacturer's average annual production of vehicles manufactured on or after September 1, 2003, and before September 1, 2006, or

(2) The manufacturer's production on or after September 1, 2005, and before September 1, 2006.

(b) *Vehicles manufactured on or after September 1, 2006, and before September 1, 2007.* Subject to S4.5.5.3(b), for vehicles manufactured on or after September 1, 2006, and before September 1, 2007, the amount of vehicles complying with S4.1.5.5 for complying passenger cars, S4.2.7 for complying trucks and multipurpose passenger vehicles, or S4.4.5 for complying buses shall be not less than 80 percent of:

(1) If the manufacturer has manufactured vehicles for sale in the United States during both of the two production years immediately prior to September 1, 2006, the manufacturer's average annual production of vehicles manufactured on or after September 1, 2004, and before September 1, 2007, or

(2) The manufacturer's production on or after September 1, 2006, and before September 1, 2007.

S4.5.5.3 *Calculation of complying vehicles.*

(a) For the purposes of complying with S4.5.5.2(a), a manufacturer may count a vehicle if it is manufactured on or after February 7, 2005, but before September 1, 2006.

(b) For the purposes of complying with S4.5.5.2(b), a manufacturer may count a vehicle if it:

(1) Is manufactured on or after February 7, 2005, but before September 1, 2007, and

(2) Is not counted toward compliance with S4.5.5.2(a).

S4.5.5.4 *Vehicles produced by more than one manufacturer.*

(a) For the purpose of calculating average annual production of vehicles for each manufacturer and the number of vehicles manufactured by each manufacturer under S4.5.5.2, a vehicle produced by more than one manufacturer shall be attributed to a single manufacturer as follows, subject to paragraph (b) of this section.

(1) A vehicle that is imported shall be attributed to the importer.

(2) A vehicle manufactured in the United States by more than one manufacturer, one of which also markets the vehicle, shall be attributed to the manufacturer that markets the vehicle.

(b) A vehicle produced by more than one manufacturer shall be attributed to any one of the vehicle's manufacturers specified by an express written contract, reported to the National Highway Traffic Safety Administration under 49 CFR part 585, between the manufacturer so specified and the manufacturer to which the vehicle would otherwise be attributed under paragraph (a) of this section.

■ 4. Section 571.225 is amended by revising S13.1.2(c), S14.2.2, and S16.3.2 to read as follows:

§ 571.225 Standard No. 225; Child restraint anchorage systems.

* * * * *

S13.1.2 * * *

(c) A vehicle produced by more than one manufacturer must be attributed to any one of the vehicle's manufacturers specified by an express written contract, reported to the National Highway Traffic Safety Administration under 49 CFR part 585, between the manufacturer so specified and the manufacturer to which the vehicle would otherwise be attributed under S13.1.2(a) or (b).

* * * * *

S14.2.2 A vehicle produced by more than one manufacturer must be attributed to any one of the vehicle's manufacturers specified by an express written contract, reported to the National Highway Traffic Safety Administration under 49 CFR part 585, between the manufacturer so specified and the manufacturer to which the vehicle would otherwise be attributed under S14.2.1.

* * * * *

S16.3.2 A vehicle produced by more than one manufacturer must be attributed to any one of the vehicle's manufacturers specified by an express written contract, reported to the National Highway Traffic Safety Administration under 49 CFR part 585, between the manufacturer so specified and the manufacturer to which the vehicle would otherwise be attributed under S16.3.1.

* * * * *

PART 585—PHASE–IN REPORTING REQUIREMENTS

Subpart A—General

Sec.

585.1 Definitions.
585.2 Phase-in reports.
585.3 Vehicles produced by more than one manufacturer.
585.4 Petitions to extend period to file report.

Subpart B—Advanced Air Bag Phase-in Reporting Requirements

585.11 Scope.
585.12 Purpose.
585.13 Applicability.
585.14 Definitions.
585.15 Reporting requirements.
585.16 Records.

Subpart C—Rear Inboard Lap/Shoulder Belt Phase-in Reporting Requirements

585.21 Scope.
585.22 Purpose.
585.23 Applicability.
585.24 Reporting requirements.
585.25 Records.

Subpart D—Child Restraint Anchorage System Phase-in Reporting Requirements

585.31 Scope.
585.32 Purpose.
585.33 Applicability.
585.34 Response to inquiries.
585.35 Reporting requirements.
585.36 Records.

Subpart E—Fuel System Integrity Phase-in Reporting Requirements

585.41 Scope.
585.42 Purpose.
585.43 Applicability.
585.44 Response to inquiries.
585.45 Reporting requirements.
585.46 Records.

Subpart F—Tires for Motor Vehicles with a GVWR of 10,000 Pounds or Less Phase-in Reporting Requirements

585.51 Scope.
585.52 Purpose.
585.53 Applicability.
585.54 Response to inquiries.
585.55 Reporting requirements.
585.56 Records.

Authority: 49 U.S.C. 322, 30111, 30115, 30117, and 30166; delegation of authority at 49 CFR 1.50.

■ 5. Part 585 is revised to read as follows:

Subpart A—General

§ 585.1 Definitions.

(a) All terms defined in 49 U.S.C. 30102 are used in accordance with their statutory meaning.

(b) The terms *bus, gross vehicle weight rating* or *GVWR, motor vehicle, multipurpose passenger vehicle, passenger car,* and *truck* are used as defined in § 571.3 of this chapter.

(c) *Production year* means the 12-month period between September 1 of one year and August 31 of the following year, inclusive, unless otherwise specified.

§ 585.2 Phase-in reports.

Each report submitted to NHTSA under this part shall:

(a) Identify the manufacturer;

(b) State the full name, title, and address of the official responsible for preparing the report;

(c) Identify the production year being reported on;

(d) Contain a statement regarding whether or not the manufacturer complied with the requirements of the Federal motor vehicle safety standard addressed by the report, for the period covered by the report, and the basis for that statement;

(e) Be written in the English language; and

(f) Be submitted to: Administrator, National Highway Traffic Safety Administration, 400 Seventh Street, SW., Washington, DC 20590.

§ 585.3 Vehicles produced by more than one manufacturer.

Each manufacturer whose reporting of information is affected by one or more of the express written contracts permitted by a Federal Motor Vehicle Safety Standard subject to the reporting requirements of this part shall:

(a) Report the existence of each contract, including the names of all parties to the contract and explain how the contract affects the report being submitted.

(b) Report the number of vehicles covered by each contract in each production year.

§ 585.4 Petitions to extend period to file report.

A petition for extension of the time to submit a report required under this part shall be received not later than 15 days before the report is due. The petition shall be submitted to: Administrator, National Highway Traffic Safety Administration, 400 Seventh Street, SW., Washington, DC 20590. The filing of a petition does not automatically extend the time for filing a report. A petition will be granted only if the petitioner shows good cause for the extension, and if the extension is consistent with the public interest.

Subpart B—Advanced Air Bag Phase-in Reporting Requirements

§ 585.11 Scope.

This subpart establishes requirements for manufacturers of passenger cars and trucks, buses, and multipurpose passenger vehicles with a GVWR of 3,855 kg or less and an unloaded vehicle weight of 2,495 kg or less to submit reports, and maintain records related to the reports, concerning the number and identification of such vehicles that are certified as complying with the advanced air bag requirements of Standard No. 208, *Occupant crash protection* (49 CFR 571.208).

§ 585.12 Purpose.

The purpose of these reporting requirements is to aid the National Highway Traffic Safety Administration in determining whether a manufacturer has complied with the advanced air bag requirements of Standard No. 208 during the phase-ins of those requirements.

§ 585.13 Applicability.

This subpart applies to manufacturers of passenger cars and trucks, buses, and multipurpose passenger vehicles with a GVWR of 3,855 kg or less and an unloaded vehicle weight of 2,495 kg or less. However, this subpart does not apply to any manufacturers whose

production consists exclusively of walk-in vans, vehicles designed to be sold exclusively to the U.S. Postal Service, vehicles manufactured in two or more stages, and vehicles that are altered after previously having been certified in accordance with part 567 of this chapter. In addition, this subpart does not apply to manufacturers whose production of motor vehicles for the United States market is less than 5,000 vehicles in a production year.

§ 585.14 Definitions.

For the purposes of this subpart,

(a) *Phase one of the advanced air bag requirements of Standard No. 208* refers to the requirements set forth in S14.1, S14.2, S14.5.1(a), S14.5.2, S15.1, S15.2, S17, S19, S21, S23, and S25 of Federal Motor Vehicle Safety Standard No. 208, 49 CFR 571.208.

(b) *Phase two of the advanced air bag reporting requirements of Standard No. 208* refers to the requirements set forth in S14.3, S14.4, S14.5.1(b), S14.5.2, S15.1, S15.2, S17, S19, S21, S23, and S25 of Federal Motor Vehicle Safety Standard No. 208, 49 CFR 571.208.

(c) *Vehicles* means passenger cars and trucks, buses, and multipurpose passenger vehicles with a GVWR of 3,855 kg or less and an unloaded vehicle weight of 2,495 kg or less manufactured for sale in the United States whose production of motor vehicles for sale in the United States is equal to or greater than 5,000 vehicles in a production year, and does not mean walk-in vans, vehicles designed to be sold exclusively to the U.S. Postal Service, vehicles manufactured in two or more stages, and vehicles that are altered after previously having been certified in accordance with part 567 of this chapter.

§ 585.15 Reporting requirements.

(a) *Advanced credit phase-in reporting requirements.* (1) Within 60 days after the end of production years ending August 31, 2000, August 31, 2001, August 31, 2002, and August 31, 2003, each manufacturer choosing to certify vehicles manufactured during any of those production years as complying with phase one of the advanced air bag requirements of Standard No. 208 shall submit a report to the National Highway Traffic Safety Administration providing the information specified in paragraph (c) of this section and in § 585.2 of this part.

(2) Within 60 days after the end of the production year ending August 31, 2007, each manufacturer choosing to certify vehicles manufactured during that production year as complying with phase two of the advanced air bag requirements of Standard No. 208 shall submit a report to the National Highway Traffic Safety Administration providing the information specified in paragraph (c) of this section and in § 585.2 of this part.

(b) *Phase-in reporting requirements.* (1) Within 60 days after the end of the production years ending August 31, 2004, August 31, 2005, and August 31, 2006, each manufacturer shall submit a report to the National Highway Traffic Safety Administration regarding its compliance with phase one of the advanced air bag requirements of Standard No. 208 for its vehicles produced in that production year. The report shall provide the information specified in paragraph (d) of this section and in § 585.2 of this part. Each report shall also specify the number of advance credit vehicles, if any, which are being applied to the production year being reported on.

(2) Within 60 days after the end of production years ending August 31, 2008, August 31, 2009, and August 31, 2010, each manufacturer shall submit a report to the National Highway Traffic Safety Administration regarding its compliance with phase two of the advanced air bag requirements of Standard No. 208 for its vehicles produced in that production year. The report shall provide the information specified in paragraph (d) of this section and in § 585.2 of this part. Each report shall also specify the number of advance credit vehicles, if any, which are being applied to the production year being reported on.

(c) *Advanced credit phase-in report content.* (1) With respect to the reports identified in section 585.15(a)(1), each manufacturer shall report for the production year for which the report is filed the number of vehicles, by make and model year, that meet the applicable advanced air bag requirements of Standard No. 208, and to which advanced air bag requirements the vehicles are certified.

(2) With respect to the report identified in section 585.15(a)(2), each manufacturer shall report the number of vehicles, by make and model year, that meet the applicable advanced air bag requirements of Standard No. 208, and to which the advanced air bag requirements the vehicles are certified.

(d) *Phase-in report content.* (1) Basis for phase-in production requirements. For production years ending August 31, 2003, August 31, 2004, August 31, 2005, August 31, 2007, August 31, 2008, and August 31, 2009, each manufacturer shall provide the number of vehicles manufactured in the current production year, or, at the manufacturer's option, for the current production year and each of the prior two production years if the manufacturer has manufactured vehicles during both of the two production years prior to the year for which the report is being submitted.

(2) Production of complying vehicles. Each manufacturer shall report for the production year for which the report is filed the number of vehicles, by make and model year, that meet the applicable advanced air bag requirements of Standard No. 208, and to which advanced air bag requirements the vehicles are certified.

§ 585.16 Records.

Each manufacturer shall maintain records of the Vehicle Identification Number of each vehicle for which information is reported under § 585.15(c)(1) and (d)(2) until December 31, 2011.

Subpart C—Rear Inboard Lap/Shoulder Belt Phase-In Reporting Requirements

§ 585.21 Scope.

This subpart establishes requirements for manufacturers of passenger cars and for trucks, buses, and multipurpose passenger vehicles with a GVWR of 4,536 kg (10,000 lb) or less to submit reports, and maintain records related to the reports, concerning the number and identification of such vehicles that are certified as complying with the Type 2 seat belt requirements for rear seating positions of Standard No. 208, *Occupant crash protection* (49 CFR 571.208).

§ 585.22 Purpose.

The purpose of these reporting requirements is to assist the National Highway Traffic Safety Administration in determining whether a manufacturer has complied with the Type 2 seat belt requirements for rear seating positions of Standard No. 208.

§ 585.23 Applicability.

This subpart applies to manufacturers of passenger cars and trucks, buses, and multipurpose passenger vehicles with a GVWR of 4,536 kg or less. However, this subpart does not apply to any manufacturers whose production consists exclusively of walk-in vans, vehicles designed to be sold exclusively to the U.S. Postal Service, vehicles manufactured in two or more stages, and vehicles that are altered after previously having been certified in accordance with part 567 of this chapter. In addition, this subpart does not apply to manufacturers whose worldwide production of motor vehicles is less than 5,000 vehicles in a production year.

§ 585.24 Reporting requirements.

(a) *Advanced credit phase-in reporting requirements.* Within 60 days after the end of the production year ending August 31, 2005, each manufacturer choosing to certify vehicles manufactured during that production year as complying with the Type 2 seat belt for each rear designated seating position requirements of Standard No. 208 shall submit a report to the National Highway Traffic Safety Administration providing the information specified in paragraph (c) of this section and in § 585.2 of this part.

(b) *Phase-in reporting requirements.* Within 60 days after the end of the production years ending August 31, 2006, and August 31, 2007, each manufacturer shall submit a report to the National Highway Traffic Safety Administration regarding its compliance with the Type 2 seat belt for each rear designated seating position requirements of Standard No. 208 for its vehicles produced in that production year. The report shall provide the information specified in paragraph (d) of this section and in § 585.2 of this part. Each report shall also specify the number of advance credit vehicles, if any, which are being applied to the production year being reported on.

(c) *Advanced credit phase-in report content.* With respect to the reports identified in section 585.24(a), each manufacturer shall report for the production year for which the report is filed the number of vehicles, by make and model year, that meet the applicable Type 2 seat belt for each rear designated seating position requirements of Standard No. 208.

(d) *Phase-in report content.* (1) Basis for phase-in production requirements. For production years ending August 31, 2006, and August 31, 2007, each manufacturer shall provide the number of vehicles manufactured in the current production year, or, at the manufacturer's option, for the current production year and each of the prior two production years if the manufacturer has manufactured vehicles during each production year prior to the year for which the report is being submitted.

(2) Production of complying vehicles. Each manufacturer shall report for the production year for which the report is filed the number of vehicles, by make and model year, that meet the applicable Type 2 seat belt for each rear designated seating position requirements of Standard No. 208.

§ 585.25 Records.

Each manufacturer shall maintain records of the Vehicle Identification Number of each vehicle for which information is reported under § 585.24(c) and (d)(2) until December 31, 2008.

Subpart D—Child Restraint Anchorage System Phase-In Reporting Requirements

§ 585.31 Scope.

This subpart established requirements for manufacturers of passenger cars and of trucks and multipurpose passenger vehicles with a GVWR of 3,855 kg or less, and of buses with a GVWR of 4,536 kg or less, to submit a report, and maintain records related to the report, concerning the number of such vehicles that meet the requirements of Standard No. 225, *Child restraint anchorage systems* (49 CFR 571.225).

§ 585.32 Purpose.

The purpose of these reporting requirements is to assist the National Highway Traffic Safety Administration in determining whether a manufacturer has complied with Standard No. 225.

§ 585.33 Applicability.

This subpart applies to manufacturers of passenger cars, and of trucks and multipurpose passenger vehicles with a GVWR of 3,855 kg or less, and of buses with a GVWR of 4,536 kg or less. However, this subpart does not apply to vehicles excluded by S5 of Standard No. 225 from the requirements of the standard.

§ 585.34 Response to inquiries.

At any time during the production years ending August 31, 2000, August 31, 2001, August 31, 2002, and August 31, 2005 each manufacturer shall, upon request from the Office of Vehicle Safety Compliance, provide information identifying the vehicles (by make, model and vehicle identification number) that have been certified as complying with Standard No. 225. The manufacturer's designation of a vehicle as a certified vehicle is irrevocable.

§ 585.35 Reporting requirements.

(a) *General reporting requirements.* Within 60 days after the end of the production years ending August 31, 2000, August 31, 2001, and August 31, 2002, each manufacturer shall submit a report to the National Highway Traffic Safety Administration concerning its compliance with the child restraint anchorage system requirements of Standard No. 225 for its passenger cars, trucks, buses, and multipurpose passenger vehicles produced in that year. The report shall provide the information specified in paragraph (b) of this section and in § 585.2 of this part.

(b) *Report content.* (1) *Basis for phase-in production goals.* Each manufacturer shall provide the number of passenger cars and trucks and multipurpose passenger vehicles with a GVWR of 3,855 kg or less, and buses with a GVWR of 4,536 kg or less manufactured for sale in the United States for each of the three previous production years, or, at the manufacturer's option, for the current production year. A new manufacturer that has not previously manufactured these vehicles for sale in the United States shall report the number of such vehicles manufactured during the current production year.

(2) *Production.* (i) Each manufacturer shall report for the production year for which the report is filed, except for the production year ending August 31, 2005: the number of passenger cars and trucks and multipurpose passenger vehicles with a GVWR of 3,855 kg or less, and buses with a GVWR of 4,536 kg or less, that meet Standard No. 225.

(ii) Each manufacturer shall report for the production year ending August 31, 2005: the number of passenger cars and trucks and multipurpose passenger vehicles with a GVWR of 3,855 kg or less, and buses with a GWVR of 4,536 kg or less, that meet S6.3.1 and S9.4 of Standard No. 225.

§ 585.36 Records.

Each manufacturer shall maintain records of the Vehicle Identification Number for each vehicle for which information is reported under § 585.35(b)(2)(i) until December 31, 2004. Each manufacturer shall maintain records of the Vehicle Identification Number for each vehicle for which information is reported under § 585.35(b)(2)(ii) until December 31, 2007.

Subpart E—Fuel System Integrity Phase-In Reporting Requirements

§ 585.41 Scope.

This subpart establishes requirements for manufacturers of passenger cars, multipurpose passenger vehicles, trucks, and buses with a GVWR of 4,536 kg (10,000 lb) or less to respond to NHTSA inquiries, to submit reports, and to maintain records related to the reports, concerning the number of such vehicles that meet the upgraded requirements of Standard No. 301, *Fuel systems integrity* (49 CFR 571.301).

§ 585.42 Purpose.

The purpose of these requirements is to assist the National Highway Traffic Safety Administration in determining whether a manufacturer has complied with the upgraded requirements of Standard No. 301.

§ 585.43 Applicability.

This subpart applies to manufacturers of passenger cars, multipurpose vehicles, trucks and buses with a GVWR of 4,536 kg or less.

§ 585.44 Response to inquiries.

During the production years ending August 31, 2007, August 31, 2008, and August 31, 2009, each manufacturer shall, upon request from the Office of Vehicle Safety Compliance, provide information identifying the vehicles (by make, model, and vehicle identification number) that have been certified as complying with the requirements of S6.2(b) of Standard No. 301. The manufacturer's designation of a vehicle as a certified vehicle is irrevocable.

§ 585.45 Reporting requirements.

(a) *General reporting requirements.* Within 60 days after the end of the production years ending August 31, 2007, August 31, 2008 and August 31, 2009, each manufacturer shall submit a report to the National Highway Traffic Safety Administration concerning its compliance with S6.2(b) of Standard No. 301 for its passenger cars, multipurpose passenger vehicles, trucks, and buses with a GVWR of less than 4,536 kg produced in that year. Each report shall provide the information specified in paragraph (b) of this section and in section 585.2 of this part.

(b) *Report content.* (1) Basis for statement of compliance. Each manufacturer shall provide the number of passenger cars, multipurpose passenger vehicles, trucks, and buses with a GVWR of 4,536 kg or less manufactured for sale in the United States for each of the three previous production years, or, at the manufacturer's option, for the previous production year. A new manufacturer that has not previously manufactured these vehicles for sale in the United States must report the number of such vehicles manufactured during the current production year.

(2) Production. Each manufacturer shall report for the production year for which the report is filed the number of passenger cars, multipurpose passenger vehicles, trucks, and buses with a GVWR of 4,536 kg or less that meet S6.2(b) or S6.3(b) of Standard No. 301.

§ 585.46 Records.

Each manufacturer shall maintain records of the Vehicle Identification Number for each vehicle for which information is reported under § 585.45(b)(2) until December 31, 2010.

Subpart F—Tires for Motor Vehicles with a GVWR of 10,000 Pounds or Less Phase-In Reporting Requirements

§ 585.51 Scope.

This subpart establishes requirements for manufacturers of new pneumatic tires for motor vehicles with a GVWR of 4,536 kg (10,000 lb) or less to respond to NHTSA inquiries, to submit reports, and to maintain records related to the reports, concerning the number of such tires that meet the requirements of Standard No. 139, *New pneumatic tires for light vehicles* (49 CFR 571.139).

§ 585.52 Purpose.

The purpose of these requirements is to assist the National Highway Traffic Safety Administration in determining whether a manufacturer has complied with the requirements of Standard No. 139.

§ 585.53 Applicability.

This subpart applies to manufacturers of tires for motor vehicles with a GVWR of 4,536 kg or less.

§ 585.54 Response to inquiries.

Each manufacturer shall, upon request from the Office of Vehicle Safety Compliance, provide information identifying the tires (by make, model, brand and tire identification number) that have been certified as complying with the requirements of Standard No. 139. The manufacturer's designation of a tire as a certified tire is irrevocable.

§ 585.55 Reporting requirements.

(a) *General reporting requirements.* Within 60 days after the end of the production years ending August 31, 2006 and August 31, 2007, each manufacturer shall submit a report to the National Highway Traffic Safety Administration concerning its compliance with Standard No. 139 for its tires produced in that year for motor vehicles with a GVWR of 4,536 kg or less. Each report shall provide the information specified in paragraph (b) of this section and in section 585.2 of this part.

(b) *Report content.* (1) Basis for statement of compliance. Each manufacturer shall provide the number of tires for motor vehicles with a GVWR of 4,536 kg or less manufactured for sale in the United States for each of the three previous production years, or, at the manufacturer's option, for the production year for which the report is filed. A new manufacturer that has not previously manufactured these tires for sale in the United States shall report the number of such tires manufactured during the current production year.

(2) Production. Each manufacturer shall report for the production year for which the report is filed the number of new pneumatic tires for motor vehicles with a GVWR of 4,536 kg or less that meet Standard No. 139.

§ 585.56 Records.

Each manufacturer shall maintain records of the tire identification number for each vehicle for which information is reported under § 585.55(b)(2) until December 31, 2008.

PART 586—[REMOVED AND RESERVED]

■ 7. Part 586 is removed and the part is reserved.

PART 589—[REMOVED AND RESERVED]

■ 8. Part 589 is removed and the part is reserved.

PART 590—[REMOVED AND RESERVED]

■ 9. Part 590 is removed and the part is reserved.

PART 596—[REMOVED AND RESERVED]

■ 10. Part 596 is removed and the part is reserved.

PART 597—[REMOVED AND RESERVED]

■ 11. Part 597 is removed and the part is reserved.

Jeffrey W. Runge,

Administrator.

[FR Doc. 04–26874 Filed 12–3–04; 3:59 pm]

BILLING CODE 4910–59–P

DEPARTMENT OF COMMERCE

National Oceanic and Atmospheric Administration

50 CFR Part 648

[Docket No. 041018283–4340–02; I.D. 102204C]

RIN 0648–AS81

Magnuson-Stevens Fishery Conservation and Management Act (Magnuson-Stevens Act) Provisions; Fisheries of the Northeastern United States; Northeast (NE) Multispecies Fishery

AGENCY: National Marine Fisheries Service (NMFS), National Oceanic and Atmospheric Administration (NOAA), Commerce.

ACTION: Final interim rule.

SUMMARY: NMFS is implementing the days-at-sea (DAS) allocation procedure contained in the final rule implementing Amendment 13 to the NE Multispecies Fishery Management Plan (FMP) under Magnuson-Stevens Act interim rule authority. This DAS allocation procedure establishes a DAS baseline allocation based on historic participation in the NE multispecies DAS fishery, and caps a vessel's annual DAS usage at the vessel's DAS allocation prior to August 1, 2002, the annual DAS allocation for the 2001 fishing year (May 1, 2001 - April 30, 2002).

DATES: Effective January 7, 2005.

ADDRESSES: Copies of the Final Supplemental Environmental Impact Statement (FSEIS) and Regulatory Impact Review (RIR) prepared for Amendment 13 and supporting this action are available from Paul J. Howard, Executive Director, New England Fishery Management Council, 50 Water Street, The Tannery Mill 2, Newburyport, MA 01950. The FSEIS and RIR are also accessible via the internet at *http://www.nefmc.org/nemulti/*. NMFS prepared a Final Regulatory Flexibility Analysis (FRFA) for this action, which is contained in the Classification section of this rule.

FOR FURTHER INFORMATION CONTACT: Thomas Warren, Fishery Policy Analyst, (978) 281–9347, fax (978) 281–9135.

SUPPLEMENTARY INFORMATION:

Background

A proposed rule for this action was published on October 28, 2004 (69 FR 62844), with public comments accepted through November 12, 2004. Details regarding the development of the DAS baseline allocation are in Amendment 13 and the need for this final interim rule are the same as those contained in the preamble of the proposed rule and are not repeated here.

Amendment 13 established a DAS baseline allocation based on historic participation in the NE multispecies DAS fishery. The proposed rule for Amendment 13 (69 FR 4362, January 29, 2004) stated that a vessel's DAS baseline allocation would be determined by the highest number of reported DAS fished during a single qualifying fishing year in which the vessel landed at least 5,000 lb (2,268 kg) of regulated multispecies during the 6–year period from May 1, 1996, through April 30, 2002. The proposed rule to implement Amendment 13 did not include an explicit provision that would have capped a vessel's annual DAS usage at the vessel's DAS allocation prior to August 1, 2002, the annual DAS allocation for the 2001 fishing year (May 1, 2001 - April 30, 2002). To rectify the omission of the DAS usage cap in the proposed rule, NMFS added language to include the cap in the regulatory text of the final rule implementing Amendment 13 to ensure that the DAS baseline procedure complied with NMFS' understanding of the New England Fishery Management Council's (Council) intent. To implement the Amendment 13 final rule without an explicit cap would have been inconsistent with the Council's stated objective of reducing DAS to a level necessary to meet fishing mortality objectives.

The validity of the DAS usage cap provision in the final rule implementing Amendment 13 was questioned by certain members of the fishing industry because there was no explicit language in Amendment 13 referring to a cap on DAS usage [for the particular option selected]. One industry group filed a lawsuit asking a court to order removal of the cap.

To provide the public with the opportunity to comment on the DAS usage cap and to avoid the possibility of overfishing if the cap is removed, NMFS published the DAS allocation procedure including the cap, as a proposed interim rule. After fully considering public comment on the proposed rule, NMFS is implementing this final rule to avoid the possibility of overfishing if the cap is removed and to continue the allocation of DAS in this fishery in a manner consistent with NMFS' understanding of Council intent in approving Amendment 13.

Comments and Responses:

A total of thirteen comments on the proposed interim rule were received by the close of business on November 12, 2004. Eleven of these comments were from individuals, and two comments were from fishing industry associations. All of the issues raised in the comments are addressed below in the responses to comments.

Comment 1: Twelve commenters did not support inclusion of the DAS cap. They commented that the Amendment 13 DAS baseline provision that the Council adopted did not include a DAS cap, and cited various Amendment 13 documents that describe the DAS baseline provisions selected by the Council (Option 9) in support of their contention (i.e., the Council motion that was passed, the public hearing document, the SEIS, the proposed rule, and a March 2004 letter from NMFS to NE multispecies DAS permit holders). One commenter stated that the Council explicitly removed the cap, and one commenter did not believe that Council intent was pertinent, and stated that only what the Council votes on is relevant. One commenter stated that NMFS should provide evidence from the administrative record that would document the view that the Council's intent was inclusion of a cap. Two commenters believed that the cap resulted from analytical errors by NMFS, and one commenter stated there is no basis for NMFS to conclude that Option 9 included a DAS cap.

Response: NMFS agrees that several Amendment 13 documents (e.g., DSEIS, FSEIS, and proposed rule) do not include the DAS baseline language capping a vessel's maximum DAS baseline allocation at its DAS allocation in fishing year 2001. However, this rule is being promulgated under 50 U.S.C. 1855(c) of the Magnuson-Stevens Act which gives NMFS authority to implement interim rules to reduce overfishing without regard to whether particular measures are included in the FMP. The decision to implement this final rule, therefore, does not necessarily hinge upon the Council's intent in Amendment 13. Nevertheless, NMFS believes that the Council intended to include the cap in Amendment 13, and that this rule is consistent with that intent.

NMFS' understanding of the intent of the Council is based upon several facts. For some vessels, a DAS baseline option without a cap would result in a DAS baseline that is higher than the vessels' DAS allocation in recent years, which NMFS believes is not consistent with the stated goal of the DAS baseline Options in Amendment 13 (i.e., to reduce latent effort). The original motion passed by the Groundfish Oversight Committee on January 22, 2003, and by the Council on January 28, 2003, which was the basis of DAS baseline Option 9, was as follows: ''To include an option defining effective effort as the maximum days-at-sea used in any single year for the 1996 through 2001 fishing years not to exceed the vessels current (FY 2001) allocation. Only days-at-sea associated with a trip where at least one pound of fish was landed will be counted.''

Subsequently, the phrase pertaining to the cap was not included in pertinent documents, yet all of the other DAS baseline options include a DAS cap, and there is no documentation of any discussion at the Committee or Council to explicitly remove the cap or modify the motion. The fact that the analysis in Amendment 13 included the cap is indicative that the Plan Development

Team, which is chaired by Council staff, understood that Option 9 included a DAS cap. Finally, on November 17, 2004, the Council took an action consistent with NMFS' understanding of Council intent by voting to include in Framework Adjustment 40–B a measure that would implement the DAS baseline allocation cap established under the final rule implementing Amendment 13 and this final interim rule on a permanent basis.

Comment 2: Eight commenters believed that the proposed interim rule is not appropriate or lawful, because it makes a substantive modification to Amendment 13, and was not approved by the Council.

Response: NMFS is implementing this interim rule under the authority of 50 U.S.C. 1855(c) of the Magnuson-Stevens Act, which provides that the Secretary of Commerce may implement interim rules on a temporary basis, without Council approval and without regard to whether particular measures are included in the FMP, in order to reduce overfishing. This final interim rule is necessary to avoid the possibility of overfishing if the cap were removed and is substantively consistent with the goals and analytical methods of Amendment 13, as well as Council intent, as understood by NMFS, regarding Amendment 13.

Comment 3: Six commenters stated that if the analysis was done without the cap, the Council would have selected a different baseline option, and not Option 9. Several commenters believe that the analysis of Option 9 underestimated the effect of including the 2001 fishing year. One commenter stated that removal of the cap helps to cushion the impact of the inclusion of the 2001 fishing year on full-time vessels.

Response: Even if these comments were correct, as explained in previous responses, this rule is being implemented under the authority of 50 U.S.C. 1855(c) which does not require Council approval. Nevertheless, the Council's recent vote in connection with Framework Adjustment 40–B to retain the cap does not support the commenter's thesis. In any event, the analysis of Option 9, which assumed the cap was in place, was done correctly, and the effectiveness of this alternative in establishing a DAS baseline was one of the reasons that the alternative was selected by the Council. The effect of the inclusion of the 2001 fishing year is accurately reflected in the DAS baseline implemented by Amendment 13, and continued by this final interim rule.

Comment 4: Four commenters stated that the interim rule would have large, negative economic effects due to loss of DAS, a reduction in income for fishermen, and an impact to related industries. Some commenters stated that the combined effect of a DAS cut with the rising costs of insurance, fuel, and ice would cause economic disaster, especially for larger offshore vessels. One commenter disagreed with the IRFA in the proposed interim rule that concluded that implementation of a final interim rule to maintain a cap on the DAS baseline would not affect the cost of current fishing operations, and stated that the DAS baseline option creates winners and losers.

Response: Implementation of this final interim rule will not cause economic impacts beyond the impacts analyzed in Amendment 13 which were incorporated into this rulemaking. The NE multispecies fleet has been operating under a DAS usage cap for the past two years as a result of a series of interim and emergency action. NMFS acknowledges that inclusion of the DAS cap in the final rule implementing Amendment 13, and in this final interim rule, results in DAS baseline allocations that are different than they would be under a DAS baseline alternative that did not include a cap. However, Amendment 13 analyzed the effect of allocating DAS assuming the cap was in place. Therefore, the impacts of this rule on affected vessels is the same as those specified for Amendment 13. The FRFA analysis in the preamble of this final rule states that 390 vessels would benefit from the increase in the number of Category A DAS that would result from the removal of the cap, but that such a benefit would come at the cost of undermining Amendment 13 conservation objectives, and possibly long-term economic objectives.

Comment 5: Two commenters stated that it is not fair to let one group of vessels select their best year and limit other groups to their lowest DAS history.

Response: Any rule that allocates fishing rights among participants based upon recent fishing activity may result in different impacts on different vessels. But, the Magnuson-Stevens Act does not prohibit differential impacts as long as the allocation is designed to maximize overall benefits and promotes conservation objectives, consistent with the National Standard 4 guidelines, without deliberately discriminating among parties or groups. The DAS baseline allocation implemented by this final interim rule fairly distributes DAS based on recent groundfish activity, while successfully reducing latent effort. All vessels are subject to the same criteria for the calculation of their DAS baseline. No vessel may have a DAS baseline allocation that exceeds its DAS allocation in fishing year 2001, prior to August 1, 2001.

Comment 6: One commenter disagreed with a statement in the proposed interim rule that removal of the DAS cap could significantly increase the possibility of overfishing, and noted that there has been a relatively low DAS use rate during the 2004 fishing year. A second commenter stated that there is currently no resource emergency due to the current low rate of DAS use and the low amount of haddock that has been harvested.

Response: According to the Amendment 13 analyses which were incorporated into this rulemaking, the DAS allocation, in conjunction with the other Amendment 13 management measures, is consistent with the rebuilding plans for overfished stocks. Table 81 in the FSEIS indicates that, for some stocks, the fishing mortality reductions that are likely to be achieved by the management measures exceed the necessary fishing mortality reductions to achieve rebuilding. However, for other stocks, the fishing mortality reductions that are likely to be achieved by the management measures only exceed the necessary fishing mortality reductions by a narrow margin. NMFS agrees that the number of DAS used to date in the 2004 fishing year has been less than the DAS used during the 2003 fishing year. Because the fishing year is not yet over, however, it is premature to conclude that the DAS use rate assumptions that were relied upon in Amendment 13 are too high. Furthermore, if the DAS cap were removed, the additional allocated DAS may spur an increase in the total number of DAS used, despite the fact that some sectors of the fishery may be reducing their rate of DAS use.

Comment 7: Two commenters stated that the proposed interim rule should have considered the other baseline options that the Council considered in November 2003.

Response: The purpose of the proposed interim rule was not to re-consider all of the DAS baseline options within Amendment 13. It is NMFS' understanding that the Council selected DAS baseline Option 9 with a cap. The Council took an action consistent with this understanding at its November 16–18, 2004, Council meeting by voting to include a measure in Framework Adjustment 40–B that would implement the DAS baseline allocation cap established under the final rule for Amendment 13. The preamble to the proposed interim rule explained, in

detail, the reasons for soliciting comment on Option 9.

Comment 8: Two commenters stated that NMFS does not intend to consider the comments on the proposed rule, but is taking interim action only to remedy a legal challenge. Two commenters stated that the interim rule serves only the interests of NMFS.

Response: NMFS is considering and responding to all comments on the proposed interim rule. NMFS is implementing the final interim rule for the reasons stated in the preamble to the proposed interim rule. The interim rule serves the interest of the public, including the fishing industry by promulgating regulations in full accordance with the Administrative Procedure Act, and by implementing a DAS baseline that is consistent with the Council's goal of fishing capacity reduction and the Amendment 13 rebuilding plan.

Comment 9: The Northeast Seafood Coalition stated that their organization developed capacity Option 9, and that part of the intent of that option was to cap the DAS at the vessel's DAS allocation for fishing year 2001. The commenter clarified that they had used capacity Option 8 as the template for developing capacity Option 9, and stated that capacity Option 8 included a cap ''not to exceed the current allocation,'' as did Option 9 when initially discussed. The commenter stated that the preamble of the proposed interim rule accurately characterized the intent of the Council. The Northeast Seafood Coalition strongly supported the purpose of the proposed interim rule, stated their belief that all the relevant analyses had included the DAS cap and that they were not aware of any discussion suggesting that capacity Option 9 not include the cap, until after the Amendment 13 final rule published. Further, The Northeast Seafood Coalition stated that removal of the DAS cap would undermine the conservation objectives and the balance of social and economic cost and benefits achieved by Amendment 13. They stated that removal of the DAS cap would produce very different DAS baseline allocation results and would be inconsistent with the fishing mortality objectives of Amendment 13.

Response: The rationale set forth by this commenter is consistent with the reasons for promulgating this final interim rule as explained in the preamble to the proposed interim rule.

Classification

NMFS determined that this final interim rule is consistent with the FMP and with the Magnuson-Stevens Act and other applicable laws.

The action implements the DAS allocation procedure adopted in the final rule implementing Amendment 13, but not explicitly recommended in that amendment. The impacts of this DAS allocation procedure were thoroughly analyzed in the FSEIS prepared for Amendment 13. Specifically, the biological impacts were analyzed in sections 5.2.5.6, 5.2.6.1, and 5.2.8.4, the economic impacts were analyzed in section 5.4.9.4.5, the social impacts were analyzed in section 5.6.2.2.1.1, and the cumulative impacts were analyzed in section 5.7.7.2 of the FSEIS. A notice of availability for the FSEIS prepared for Amendment 13 was published in the **Federal Register** on February 6, 2004 (69 FR 5856), with a 30–day delay in effectiveness. NMFS decided to partially approve Amendment 13 on March 18, 2004, and, in the record of decision (ROD) signed on March 18, 2004, concluded that all practicable means to avoid, minimize, or compensate for environmental harm resulting from the measures contained in the amendment had been adopted. This action implements the DAS allocation procedure analyzed in the Amendment 13 FSEIS. Therefore, because this action does not change the determinations made in the FSEIS for Amendment 13 and in the corresponding ROD, further environmental review under the National Environmental Policy Act is not necessary.

The Office of Management and Budget has determined that this final interim rule is not significant for purposes of Executive Order 12866.

NMFS acknowledges that the inclusion of the DAS cap in the final rule implementing Amendment 13 did not provide the public with an opportunity to comment on this provision. The proposed and final interim rule for this action solicited public comment on the DAS cap to address this procedural infirmity. Implementing the DAS allocation procedure contained in the final rule implementing Amendment 13 with the DAS cap would avoid the potential economic and biological impacts that would result should the DAS cap be removed. Removal of the DAS cap would have the potential of slowing rebuilding efforts by allowing additional DAS to be used in the fishery. This could, in turn, result in exceeding the mortality targets established in Amendment 13. Exceeding the mortality targets would require additional DAS reductions in future years, thus resulting in greater adverse economic impacts to the fishing industry. Finally, operating the fishery without a DAS usage cap and inserting the extra effort back into the fishery would not be consistent with Amendment 13 and the goals and objectives the Magnuson-Stevens Act and its national standards.

NMFS prepared a FRFA which incorporates the IRFA and the comments and responses herein, as required by section 603 of the Regulatory Flexibility Act, that describes the economic impact this rule will have on small entities. This FRFA is incorporated entirely within the Classification section of this final interim rule. A description of the action, why it is necessary, and the legal basis for the action are contained in the preamble to the proposed interim rule (69 FR 62844, October 28, 2004). This final interim rule does not duplicate, overlap, or conflict with any relevant Federal rules. The universe of small entities to which this rule applies is contained in the IRFA of the proposed rule implementing Amendment 13 and is not repeated here. This rule does not impose any additional reporting, recordkeeping or other compliance requirements that are not already in existence as a result of the final rule implementing Amendment 13.

As mentioned above, this final interim rule is being promulgated under the authority of section 305(c) of the Magnuson-Stevens Act. The proposed rule to implement Amendment 13 omitted the DAS usage cap from the DAS baseline procedures, but NMFS added regulatory language to the Amendment 13 final rule to implement such a cap. This action establishes the DAS baseline allocation procedure contained in the Amendment 13 final rule consistent with the rulemaking procedures set forth under the APA.

Two alternatives were considered for purposes of the final regulatory flexibility analysis: (1) The groundfish fishery without a DAS usage cap for the 2004 fishing year; and (2) a DAS usage cap as analyzed in Amendment 13. Additional alternatives were not considered as the two alternatives considered for this action described above are the only two feasible alternatives within the context of this final interim rule, as specified in the preamble to the proposed interim rule. The analysis suggests that the lack of a DAS usage cap would increase the number of Category A DAS by 8.9 percent (approximately 3,900 A DAS) over the original allocation of A DAS under Amendment 13. The allocation of A DAS would therefore rise to approximately 47,689 days from the present level of 43,773 days. This increase in A DAS would benefit 390

vessels with an average increase of 10.8 A DAS (ranging from 0.02 to 52.69 A DAS) per vessel. Amendment 13 analyzed the average daily returns by vessel category and concluded that average daily returns while fishing on a DAS would range from $1,139 to $2,683 depending on the vessel category. Assuming that additional A DAS were re-allocated to the fishery, individual vessels may realize these net returns. However, net returns may not be uniform within each vessel category because of the variation in number of A DAS that would be expected to return to the fishery (i.e., 0.02 to 52.69 A DAS). Individual vessels would also need to consider other variables in combination with their allocated A DAS to determine the likelihood of exact changes in vessel profitability. The preferred alternative as analyzed within Amendment 13 assumes the DAS usage cap is in place and the NE multispecies fishery is operating based on the DAS allocation procedure specified in the final rule for Amendment 13. In this case, the establishment of a DAS usage cap, as set forth in the final rule, would neither affect the costs of current fishing operations for individual vessels, nor would it impose any additional compliance costs on NE groundfish vessels. DAS allocations to individual vessels would remain unchanged, giving each vessel the same opportunity to earn revenues as they exist in the present fishery. In addition, there would be no change to individual vessel profitability resulting from the maintenance of the present DAS schedule. Furthermore, the NE multispecies fleet has been operating under a DAS usage cap for the past two years as a result of a series of interim and emergency actions taken by NMFS resulting from the Conservation Law Foundation v. Evans litigation (67 FR 50292, August 1, 2002; 68 FR 2919, January 22, 2003; and 68 FR 38234, June 27, 2003). Individual vessels have received reduced DAS allocations based on this cap and have already experienced economic impacts that would be similar to those resulting from the existence of the DAS usage cap for the 2004 fishing season.

Implementing the DAS cap (i.e., capping the DAS baseline at a vessel's 2001 allocation) is critical in order to be consistent with the intent of the Council's goal of fishing capacity reduction. Allowing vessels to have a baseline DAS allocation that exceeds the level of recent historic allocation is counter to the stated goal of Amendment 13's alternatives to control capacity. The non-selected alternative would also have the potential of slowing rebuilding efforts and would lead to additional DAS reductions in future years, thus resulting in greater adverse economic impacts. Finally, operating the fishery without a DAS usage cap and inserting the extra effort back into the fishery would not be consistent with Amendment 13 and the goals and objectives the Magnuson-Stevens Act and its national standards.

A Summary of the Significant Issues Raised by the Public Comments in Response to the IRFA, a Summary of the Assessment of the Agency of such Issues, and a Statement of any Changes made in the Proposed Rule as a Result of such Comments.

NMFS received thirteen comments on the proposed interim rule. Of these, two comments dealt with economic impacts to small entities (vessels) resulting from the management measures in the proposed interim rule and one comment specifically disagreed with the conclusions of the IRFA. NMFS responded to the comment regarding the IRFA in the response to Comment 4 specified above. NMFS addressed the two comments regarding the economic impacts to small entities in the FRFA analysis in the preamble of this final rule.

List of Subjects in 50 CFR Part 648

Fisheries, Fishing, Reporting and recordkeeping requirements.

Dated: December 3, 2004.

Rebecca Lent,

Deputy Assistant Administrator for Regulatory Programs, National Marine Fisheries Service.

■ For the reasons set out in the preamble, 50 CFR part 648 is amended as follows:

PART 648—FISHERIES OF THE NORTHEASTERN UNITED STATES

■ 1. The authority citation for part 648 continues to read as follows:

Authority: 16 U.S.C. 1801 *et seq.*

■ 2. In § 648.82, paragraph (c)(1) introductory text is republished to read as follows:

§ 648.82 Effort-control program for NE multispecies limited access vessels.

* * * * *

(c) *Used DAS baseline*—(1) *Calculation of used DAS baseline.* For all valid limited access NE multispecies DAS vessels, vessels issued a valid small vessel category permit, and NE multispecies Confirmation of Permit Histories, beginning with the 2004 fishing year, a vessel's used DAS baseline shall be based on the fishing history associated with its permit and shall be determined by the highest number of reported DAS fished during a single qualifying fishing year, as specified in paragraphs (c)(1)(i) through (iv) of this section, during the 6–year period from May 1, 1996, through April 30, 2002, not to exceed the vessel's annual allocation prior to August 1, 2002. A qualifying year is one in which a vessel landed 5,000 lb (2,268 kg) or more of regulated multispecies, based upon landings reported through dealer reports (based on live weights of landings submitted to NMFS prior to April 30, 2003). If a vessel that was originally issued a limited access NE multispecies permit was lawfully replaced in accordance with the replacement restrictions specified in § 648.4(a), then the used DAS baseline shall be defined based upon the DAS used by the original vessel and by subsequent vessel(s) associated with the permit during the qualification period specified in this paragraph (c)(1). The used DAS baseline shall be used to calculate the number and category of DAS that are allocated for use in a given fishing year, as specified in paragraph (d) of this section.

* * * * *

[FR Doc. 04–26950 Filed 12–3–04; 2:54 pm]

BILLING CODE 3510–22–S

DEPARTMENT OF COMMERCE

National Oceanic and Atmospheric Administration

50 CFR Part 648

[Docket No. 021101264–3016–02; I.D. 120304C]

Fisheries of the Northeastern United States; Atlantic Herring Fishery; Total Allowable Catch Harvested for Management Area 1B

AGENCY: National Marine Fisheries Service (NMFS), National Oceanic and Atmospheric Administration (NOAA), Commerce.

ACTION: Closure of directed fishery for Management Area 1B.

SUMMARY: NMFS announces that 95 percent of the Atlantic herring total allowable catch (TAC) allocated to Management Area 1B (Area 1B) for 2004 is projected to be harvested by 0001 hrs local time, December 8, 2004. Therefore, effective 0001 hours, December 8, 2004, federally permitted vessels may not fish for, catch, possess, transfer or land more than 2,000 lb (907.2 kg) of Atlantic herring in or from Area 1B per trip or calendar day until January 1, 2005, when the 2005 period TAC becomes available, except for transiting purposes

as described in this notice. Regulations governing the Atlantic herring fishery require publication of this notification to advise vessel and dealer permit holders that no TAC is available for the directed fishery for Atlantic herring harvested from Area 1B.

DATES: Effective 0001 hrs local time, December 8, 2004, through 2400 hrs local time, December 31, 2004.

FOR FURTHER INFORMATION CONTACT: Don Frei, Fisheries Management Specialist, at (978) 281–9221.

SUPPLEMENTARY INFORMATION: Regulations governing the Atlantic herring fishery are found at 50 CFR part 648. The regulations require annual specification of optimum yield, domestic and foreign fishing, domestic and joint venture processing, and management area TACs. The 2004 TAC allocated to Area 1B (69 FR 17980, April 6, 2004) is 10,000 mt.

The regulations at 50 CFR 648.202 require the Administrator, Northeast Region, NMFS (Regional Administrator) to monitor the Atlantic herring fishery in each of the four management areas designated in the Fishery Management Plan for the Atlantic Herring Fishery and, based upon dealer reports, state data, and other available information, to determine when the harvest of Atlantic herring is projected to reach 95 percent of the TAC allocated. When such a determination is made, NMFS is required to publish notification in the **Federal Register** notifying vessel and dealer permit holders that, effective upon a specific date, vessels may not fish for, catch, possess, transfer or land more than 2,000 lb (907.2 kg) of herring per trip or calendar day in or from the specified management area for the remainder of the closure period. The Regional Administrator has determined, based upon dealer reports and other available information, that 95 percent of the total Atlantic herring TAC allocated to Area 1B for the 2004 fishing year is projected to be harvested by 0001 hrs local time, December 8, 2004. Therefore, effective 0001 hrs local time, December 8, 2004, federally permitted vessels may not fish for, catch, possess, transfer or land more than 2,000 lb (907.2 kg) of Atlantic herring in or from Area 1B per trip or calendar day through December 31, 2004; except a vessel may transit, or land herring in Area 1B with more than 2,000 lb (907.2 kg) of herring on board, provided such herring were not caught in Area 1B, and provided all fishing gear is stowed and not available for immediate use as required by § 648.23(b). Effective, 0001 hrs local time, December 8, 2004, federally permitted dealers are also advised that they may not purchase Atlantic herring from federally permitted Atlantic herring vessels that harvest more than 2,000 lb (907.2 kg) of Atlantic herring from Area 1B through December 31, 2004, 2400 hrs local time.

Classification

This action is required by 50 CFR part 648 and is exempt from review under E.O. 12866.

Authority: Authority: 16 U.S.C. 1801 *et seq.*

Dated: December 3, 2004.

Bruce C. Morehead

Acting Director, Office of Sustainable Fisheries, National Marine Fisheries Service.

[FR Doc. 04–26961 Filed 12–3–04; 2:51 pm]

BILLING CODE 3510–22–S

DEPARTMENT OF COMMERCE

National Oceanic and Atmospheric Administration

50 CFR Part 679

[Docket No. 031124287–4060–02; I.D. 120204A]

Fisheries of the Exclusive Economic Zone Off Alaska; Pacific Cod by Catcher Processor Vessels Using Hook and Line Gear in the Bering Sea and Aleutian Islands Management Area

AGENCY: National Marine Fisheries Service (NMFS), National Oceanic and Atmospheric Administration (NOAA), Commerce.

ACTION: Closure.

SUMMARY: NMFS is prohibiting directed fishing for Pacific cod by catcher processor vessels using hook and line gear in the Bering Sea and Aleutian Islands management area (BSAI). This action is necessary to prevent exceeding the 2004 total allowable catch (TAC) of Pacific cod allocated to catcher processor vessels using hook and line gear in the BSAI.

DATES: Effective 1200 hrs, Alaska local time (A.l.t.), December 4, 2004, through 2400 hrs, A.l.t., December 31, 2004.

FOR FURTHER INFORMATION CONTACT: Josh Keaton, 907–586–7228.

SUPPLEMENTARY INFORMATION: NMFS manages the groundfish fishery in the BSAI according to the Fishery Management Plan for Groundfish of the Bering Sea and Aleutian Islands Management Area (FMP) prepared by the North Pacific Fishery Management Council under authority of the Magnuson-Stevens Fishery Conservation and Management Act. Regulations governing fishing by U.S. vessels in accordance with the FMP appear at subpart H of 50 CFR part 600 and 50 CFR part 679.

The 2004 TAC of Pacific cod allocated to catcher processor vessels using hook and line gear in the BSAI is 97,795 metric tons as established by the 2004 final harvest specifications for groundfish in the BSAI (69 FR 9242, February 27, 2004) and subsequent reallocations on October 15 (69 FR 61607, October 20, 2004) and November 26 (69 FR 69828, December 1, 2004). See § 679.20(c)(3)(iii), § 679.20(c)(5), and § 679.20(a)(7)(i)(A) and (C).

In accordance with § 679.20(d)(1)(iii), the Administrator, Alaska Region, NMFS, has determined that the 2004 TAC of Pacific cod allocated to catcher processor vessels using hook and line gear in the BSAI will soon be reached. Consequently, NMFS is prohibiting directed fishing for Pacific cod by catcher processor vessels using hook and line gear in the BSAI.

After the effective date of this closure the maximum retainable amounts at 50 CFR 679.20(e) and (f) apply at any time during a trip.

Classification

This action responds to the best available information recently obtained from the fishery. The Assistant Administrator for Fisheries, NOAA, (AA), finds good cause to waive the requirement to provide prior notice and opportunity for public comment pursuant to the authority set forth at 5 U.S.C. 553(b)(B) as such requirement is impracticable and contrary to the public interest. This requirement is impracticable and contrary to the public interest as it would prevent NMFS from responding to the most recent fisheries data in a timely fashion and would delay the closure of Pacific cod allocated to catcher processor vessels using hook and line gear in the BSAI.

The AA also finds good cause to waive the 30-day delay in the effective date of this action under 5 U.S.C. 553(d)(3). This finding is based upon the reasons provided above for waiver of prior notice and opportunity for public comment.

This action is required by § 679.20 and is exempt from review under Executive Order 12866.

Authority: 16 U.S.C. 1801 *et seq.*

Dated: December 2, 2004.

Anne M. Lange,

Acting Director, Office of Sustainable Fisheries, National Marine Fisheries Service.

[FR Doc. 04–26951 Filed 12–3–04; 2:51 pm]

BILLING CODE 3510–22–S

Proposed Rules

Federal Register
Vol. 69, No. 235
Wednesday, December 8, 2004

This section of the FEDERAL REGISTER contains notices to the public of the proposed issuance of rules and regulations. The purpose of these notices is to give interested persons an opportunity to participate in the rule making prior to the adoption of the final rules.

FEDERAL RESERVE SYSTEM

12 CFR Part 226

[Regulation Z; Docket No. R–1217]

Truth in Lending

AGENCY: Board of Governors of the Federal Reserve System.

ACTION: Advance notice of proposed rulemaking.

SUMMARY: The Board is publishing for public comment an advance notice of proposed rulemaking (ANPR) to commence a review of the open-end (revolving) credit rules of the Board's Regulation Z, which implements the Truth in Lending Act. The Board periodically reviews each of its regulations to update them, if necessary. The ANPR seeks comment on a variety of specific issues relating to three broad categories: the format of open-end credit disclosures, the content of the disclosures, and the substantive protections provided under the regulation. The ANPR solicits comments on the scope of the review, and also requests commenters to identify other issues that the Board should consider addressing in the review.

DATES: Comments must be received on or before March 28, 2005.

ADDRESSES: You may submit comments, identified by Docket No. R–1217, by any of the following methods:

- Agency Web Site: *http://www.federalreserve.gov*. Follow the instructions for submitting comments at *http://www.federalreserve.gov/generalinfo/foia/ProposedRegs.cfm*.
- Federal eRulemaking Portal: *http://www.regulations.gov*. Follow the instructions for submitting comments.
- E-mail: *regs.comments@federalreserve.gov*. Include the docket number in the subject line of the message.
- FAX: (202) 452–3819 or (202) 452–3102.
- Mail: Jennifer J. Johnson, Secretary, Board of Governors of the Federal Reserve System, 20th Street and Constitution Avenue, NW., Washington, DC 20551.

See Supplementary Information, Section I., for further instructions on submitting comments.

All public comments are available from the Board's Web site at *http://www.federalreserve.gov/generalinfo/foia/ProposedRegs.cfm* as submitted, except as necessary for technical reasons. Accordingly, your comments will not be edited to remove any identifying or contact information. Public comments may also be viewed electronically or in paper in Room MP–500 of the Board's Martin Building (20th and C Streets, NW.) between 9 a.m. and 5 p.m. on weekdays.

FOR FURTHER INFORMATION CONTACT: Elizabeth A. Eurgubian, Attorney, Dan S. Sokolov and Krista P. DeLargy, Senior Attorneys, Daniel G. Lonergan and John C. Wood, Counsel, or Jane E. Ahrens, Senior Counsel, Division of Consumer and Community Affairs, Board of Governors of the Federal Reserve System, at (202) 452–3667 or 452–2412; for users of Telecommunications Device for the Deaf (''TDD'') only, contact (202) 263–4869.

SUPPLEMENTARY INFORMATION:

I. Form of Comment Letters

This ANPR requests data or comment on specific issues relating to Regulation Z's open-end credit rules. These requests are numbered consecutively. Commenters are requested to refer to these numbers in their submitted comments, which will assist the Board and members of the public that review comments online. Questions are presented by subject matter as follows:

Scope of the review: Q1.

Format of Disclosures:

Account-opening disclosures, Q2–Q3.

Periodic statements, Q4–Q6.

Credit card application disclosures (the ''Schumer box''), Q7–Q8.

Subsequent disclosures, Q9.

Model forms and clauses, Q10–Q12.

Content of Disclosures:

Classifying and labeling fees as ''finance charges'' and ''other charges,'' Q13–Q20.

Over-the-credit-limit fees, Q21–Q22.

''Effective'' or ''historical'' annual percentage rate on periodic statements, Q23–Q25.

Disclosures about rate changes, Q26–Q27.

Balance calculation methods, Q28–Q30.

Minimum payments, Q31–Q33.

Payment allocation, Q34–Q36.

Tolerances, Q37.

Other questions, Q38–Q42.

Substantive protections:

General, Q43.

Accessing credit card accounts, Q44.

''Convenience checks,'' Q45.

Unsolicited issuance of credit cards, Q46.

Prompt crediting of payments, Q47–Q51.

Additional Issues:

Providing guidance not expressly addressed in existing rules, Q52.

Adjusting exceptions based on *de minimis* amounts, Q53.

Improving plain language and organization; identifying technical revisions, Q54.

Deleting obsolete rules or guidance, Q55.

Recommendations for legislative changes, Q56.

Recommendations for nonregulatory approaches, Q57.

Reviewing other aspects of Regulation Z, Q58

The Board also requests that when possible, comment letters should use a standard typeface with a font size of 10 or 12. This enables the Board to convert text submitted in paper form to machine-readable form through electronic scanning, and eases automated retrieval of comments for review.

II. Background

The Congress based the Truth in Lending Act (TILA) on findings that economic stability would be enhanced and competition among consumer credit providers would be strengthened by the informed use of credit, which results from consumers' awareness of the credit's cost. The purposes of the TILA are: (1) To provide a meaningful disclosure of credit terms to enable consumers to compare the various credit terms available in the marketplace more readily and avoid the uninformed use of credit; and (2) to protect consumers against inaccurate and unfair credit billing and credit card practices. 15 U.S.C. 1601(a).

TILA's disclosures differ somewhat depending on whether consumer credit is an open-end (revolving) plan or a closed-end (installment) loan. TILA also contains procedural and substantive protections for consumers, for both open-end and closed-end transactions.

TILA is implemented by the Board's Regulation Z. 12 CFR part 226; 15 U.S.C. 1604(a). An Official Staff Commentary interprets the requirements of Regulation Z. 12 CFR part 226 (Supp I). Creditors that follow in good faith Board or official staff interpretations are insulated from civil liability, criminal penalties, or administrative sanction. 15 U.S.C. 1640(f).

III. Reviewing the Open-End Credit Rules

TILA, enacted in 1968, was substantially revised by the Truth in Lending Simplification Act of 1980. Regulation Z was revised and reorganized to implement the new law, effective in 1982 (46 FR 20892, April 7, 1981). Since then, the regulation has not been reviewed in its entirety, although much of it has been reviewed in individual rulemakings, to implement new legislation, in response to congressional requests for reports, or pursuant to public hearings.[1] The Official Staff Commentary is typically updated annually.

Scope of the Review. The Board periodically reviews it regulations to update them. The Board plans to review Regulation Z over the next few years. The regulation is sufficiently lengthy and complex, however, that conducting the review in stages appears to be the most appropriate approach. The Board is proposing to focus the first stage of the review on Regulation Z's rules for open-end (revolving) credit accounts that are not home-secured, chiefly general-purpose credit cards and merchant-specific credit plans, although the rules apply to open-end lines generally. Other aspects of the regulation would also be addressed if the Board determines that it is necessary or appropriate to do so. Accordingly, comment is also requested on other ways that Regulation Z could be improved in Section VI, below. Plans for future stages of the review of Regulation Z are discussed in Section VII, below. Some provisions in Regulation Z apply to both open- and closed-end credit. Even though the Board is proposing to review Regulation Z in stages, the Board will consider the need for consistency across the regulation in proposing revisions.

Q1. The Board solicits comments on the feasibility and advisability of reviewing Regulation Z in stages, beginning with the rules for open-end credit not home-secured. Are some issues raised by the open-end credit rules so intertwined with other TILA rules that other approaches should be considered? If so, what are those issues, and what other approach might the Board take to address them?

Goals. In reviewing Regulation Z, the Board's primary goal is to improve, if possible, the effectiveness and usefulness of open-end disclosures and substantive protections. Consumers' use of open-end credit, especially lines accessed by credit cards, has grown markedly. The ways in which consumers can access open-end lines and the uses they can make of these lines have both expanded. Pricing has become more complex and products increasingly diverse, especially for general purpose credit cards. Taken together, these factors suggest it is appropriate to consider whether the open-end disclosure rules and substantive protections of Regulation Z are achieving their intended purposes, which are to permit consumers to make informed decisions about the use of credit and to protect consumers against inaccurate and unfair credit billing and credit card practices. The review will also consider ways to address concerns about information overload, which can adversely affect how meaningful the disclosures are to consumers. Disclosures required under TILA are required to be clear and conspicuous; the Board intends to study alternatives for improving the format of disclosures, including revising the model forms and clauses published by the Board, to ensure that consumers get timely information in a readable form.

TILA also seeks to establish uniformity in creditors' disclosures to promote comparison shopping. Thus, in conducting the review, the Board will consider ways that the rules can be clarified for creditors to facilitate compliance and promote consistency in their disclosures. Pursuant to the Board's mandate under the Economic Growth and Regulatory Paperwork Reduction Act, the Board also intends to consider ways to reduce unnecessary regulatory burden consistent with the purposes and requirements of TILA. (*See* 68 FR 35589, June 16, 2003; 69 FR 2852, January 21, 2004; 69 FR 43347, July 16, 2004.)

Following the ANPR, the Board may determine that proposed revisions to Regulation Z's open-end credit rules are appropriate, but there may be other responses to the issues raised. For example, the Board may consider whether to recommend legislative changes. The Board may conclude that a non-regulatory response would be the most effective approach in addressing some issues, for example the issuance of recommended best practices or consumer education efforts. These alternative approaches are discussed in Section VI, below.

The Board's Authority under TILA. TILA mandates that the Board prescribe regulations to carry out the purposes of the act. 15 U.S.C. 1604(a). In promulgating open-end credit rules to implement TILA, the Board is also authorized, among other things, to do the following:

- Issue regulations that contain such classifications, differentiations, or other provisions, or provide for such adjustments and exceptions for any class of transactions, that in the Board's judgment are necessary or proper to effectuate the purposes of TILA, facilitate compliance with the act, or prevent circumvention or evasion. 15 U.S.C. 1604(a).
- Exempt from all or part of TILA any class of transactions if the Board determines that TILA coverage does not provide a meaningful benefit to consumers in the form of useful information or protection. The Board must consider factors identified in the act and publish its rationale at the time a proposed exemption is published for comment. 15 U.S.C. 1604(f).
- Exempt from TILA certain transactions involving consumers who first provide a written waiver of their TILA protections and whose annual earned income or net assets at the time of the transaction exceeds a certain dollar figure ($200,000 and $1,000,000, respectively), which the Board may adjust for inflation. 15 U.S.C. 1604(g).
- Provide tolerances for numerical disclosures other than the annual percentage rate (APR), so long as the tolerances are narrow enough to prevent disclosures that are misleading or that circumvent TILA's purposes. 15 U.S.C. 1631(d).

Open-end Consumer Credit in Today's Marketplace. The principal examples of open-end credit not home-secured are general-purpose credit cards and merchant-specific credit plans, which may or may not involve cards. In determining how the Board's goals for the Regulation Z review can best be met, the Board will consider the nature and function of open-end credit accounts, and how the market for open-end credit

[1] Amendments to Regulation Z have addressed adjustable-rate mortgage loans (52 FR 48665, December 24, 1987); home equity lines of credit (54 FR 24670, June 9, 1989), credit and charge card applications and solicitations (54 FR 13855, April 6, 1989 and 65 FR 58903, October 3, 2000), and potentially abusive mortgage lending practices (high-cost loans and reverse mortgages, 60 FR 15463, March 24, 1995, and 66 FR 65604, December 20, 2001). In connection with reports to the Congress, the Board reviewed the rules relating to consumers' right to rescind certain mortgage transactions (1995); finance charges (1996); home-equity lines of credit (1996); and closed-end mortgage loans (1998).

has developed since the last major review of the open-end rules.

Recent studies and consumer surveys (including a 2001 survey of consumers with general purpose credit cards discussed in the April 2002 article noted below) provide some data on open-end credit plans and how consumers use them, particularly credit card accounts, as follows:[2]

• *Increased number of cards held.* In 2001, 73 percent of households had at least one general purpose credit card with a revolving feature, compared to 43 percent in 1983. The 2001 consumer survey noted above showed that 20 percent of the respondents obtained a new general purpose credit card within the previous year, and that around 84 percent of those respondents did so as a result of a solicitation. The survey also showed that nearly two-thirds of the respondents who had acquired a new card in the previous year already held two other credit card accounts, and over one-third of respondents with general purpose credit cards with a revolving feature held three or more.

• *Wide range of uses.* Open-end plans, credit cards in particular, are widely used in today's marketplace. Credit cards serve as a substitute for cash and checks for millions of routine purchases, and allow consumers to engage in transactions such as telephone and Internet purchases. Also, credit limits can be high, and consumers now commonly finance the purchase of ''big-ticket'' items (such as appliances and furniture) under an open-end plan rather than a closed-end installment loan, as they did in the past. Card issuers have also developed other access methods for consumers to use their accounts, such as by offering ''convenience checks'' that may be used for purchases or to transfer balances from other accounts. In the 2001 survey noted above, about 20 percent of respondents having general purpose credit cards with a revolving feature had transferred balances in the previous year.

• *More complex pricing.* General purpose credit-card pricing has become more complex. A single account may have multiple APRs for different types of credit extensions, or that apply for limited time periods. Credit cards are available to consumers with a much wider range of credit risks, due to improved technology for risk-evaluation. As a result, pricing is more varied. Also, competition has reduced ''front-end'' costs for general purpose credit cards as card issuers eliminate annual fees and offer substantial discounts in initial interest rates. On the other hand, ''back-end'' costs have increased through higher late fees, over-the-credit-limit fees, and the use of penalty rates for late payers. In the surveys noted above, about 30 percent of credit card users reported paying a late fee within the previous year.

• *Additional account features.* The 2001 survey noted above showed that in making choices about opening or replacing card accounts, consumers consider a variety of factors, ranging from cost information about rates, annual fees, and minimum payments, to benefits such as rebate and reward programs.

• *Consumers' perceptions about account information.* The 2001 survey of consumers with general purpose credit cards asked the respondents about their perceptions of information available for these accounts. Sixty-five percent said that useful information on credit terms was either ''very easy'' or ''somewhat easy'' to obtain, and only 6 percent thought it very difficult. But when asked questions about consumers' understanding and use of Truth in Lending disclosures at account opening or on monthly bills for general purpose credit cards, nearly one-third of the respondents suggested improvements could be made regarding format and clarity.

IV. Summary of TILA's Rules for Open-End Credit Accounts

Under TILA, as implemented by Regulation Z, open-end credit exists when consumer credit is extended under a plan in which (1) the creditor reasonably contemplates repeated transactions, (2) the creditor may impose a finance charge from time to time on an outstanding unpaid balance, and (3) the credit is replenished as it is used, up to any limit set by the creditor. 15 U.S.C. 1602(i); 12 CFR 226.2(a)(20). The rules that apply to open-end credit also apply to creditors that issue ''charge cards'' that typically require outstanding balances to be paid in full at the end of each billing cycle. 12 CFR 226.2(a)(17)(iii). For purposes of this ANPR, the terms ''open-end credit'' and ''credit card'' encompass ''charge card.''

Disclosures. TILA and Regulation Z require creditors offering open-end credit plans to disclose costs and other terms related to the plan. To summarize:

• Disclosures must be provided with credit card applications and solicitations. Consumers receive key cost information in an abbreviated manner, to help consumers decide whether to apply for the card account. For direct mail solicitations, the disclosures are presented in a highly structured table.

• Disclosures provided at account-opening describe how charges associated with the plan will be determined. Consumers receive information about the periodic rate, disclosed as an APR, that will be applied to the outstanding balance, along with other fees that may be assessed on the account. Consumers' rights and responsibilities in the case of unauthorized use or billing disputes are also explained. Consumers must receive these disclosures before the first transaction on the account.

• Disclosures on periodic statements reflect the activity on the account for the statement period. In addition to the APR based on the periodic rate, periodic statements must also disclose the effective or ''historical'' APR for the billing cycle. The effective APR includes finance charges imposed in addition to interest (such as cash advance fees or balance transfer fees). Transactions that occurred and any fees imposed during the cycle must be identified on the statement, along with any time period a consumer may have to pay an outstanding balance and avoid additional finance charges (the ''grace period'').

• Disclosures about changes in account terms and about the terms for using a new credit feature or means of access are provided on an ad hoc basis.

Substantive and procedural protections. TILA and Regulation Z also provide procedural and substantive protections to consumers with open-end accounts, including special protections for credit cardholders, summarized below:

• Consumers using an open-end credit plan may assert a billing error, which triggers creditors' duty to investigate the allegation within prescribed time limits.

• Cardholders may assert against a card issuer claims or defenses arising from a credit card purchase, if the merchant honoring the card fails to resolve any dispute about the quality of the goods or services.

• Cardholders' liability for the unauthorized use of a credit card is capped at $50.

• Credit cards may be issued to consumers only upon request. One or more credit cards may be issued to cardholders in renewal of, or substitution for, an accepted card, with some conditions.

• Consumers' payments on the account must be credited as of the date

[2] Thomas A. Durkin, *Credit Cards: Use and Consumer Attitudes, 1970–2000,* Federal Reserve Bulletin, (September 2000); Thomas A. Durkin, *Consumers and Credit Disclosures: Credit Cards and Credit Insurance,* Federal Reserve Bulletin (April 2002).

the creditor receives the payment and creditors must refund credit balances.

• Creditors cannot offset consumers' credit card debt with funds held on deposit with the card issuer except in specified circumstances.

V. Request for Information and Comments on TILA's Disclosures and Protections

Under open-end plans, consumers generally control how the plan is accessed and the amount and timing of credit extensions and payments. Because consumers' decisions about using their open-end credit accounts are continuous, the relevance of key account terms to consumers' use of the account varies over the life of the account. Thus, the effectiveness of disclosures must be considered in light of the multiple functions they serve.

For example, some information received at account-opening may become relevant years later, for example, when a consumer who uses a credit card account for purchases decides for the first time to obtain a cash advance. Information provided on periodic statements tells consumers about account activity for the statement period, but it also allows consumers to make ongoing credit decisions about how much credit to use and how much of the outstanding balances to pay on various accounts. And consumers may use existing account-opening or periodic statement disclosures to compare offers they receive to apply for another account or transfer existing balances to another account.

A. Would Format Changes Enhance Consumers' Ability To Notice and Understand Disclosures by Making Them More Clear and Conspicuous?

Open-end disclosures are subject to few formatting rules. Creditors have great flexibility in designing account-opening, periodic statement, and other open-end disclosures. The primary exception to TILA and Regulation Z's flexible formatting rules for open-end credit is the abbreviated and segregated tabular disclosures required for credit card solicitations and applications (known as the ''Schumer box''). 15 U.S.C. 1637(c); 12 CFR 226.5a(a)(2). TILA disclosures must be ''clear and conspicuous,'' which is generally interpreted to be in a ''reasonably understandable form.'' 15 U.S.C. 1632; 12 CFR 226.5(a)(1); comment 5(a)(1)–1.[3]

In June 2004, the Board withdrew regulatory proposals that would have established a uniform standard for ''clear and conspicuous'' disclosures under Regulations B, E, M, Z, and DD. 69 FR 35541, June 25, 2004. Instead of adopting general definitions or standards that would apply across the five regulations, the Board decided to focus on individual disclosures and to consider ways to make specific improvements to the effectiveness of each disclosure. The Board noted that the effort to review individual disclosures would be undertaken in connection with the Board's periodic review of its regulations, commencing with the issuance of an ANPR to review the rules for open-end credit accounts under TILA and Regulation Z. Although the proposals defining ''clear and conspicuous'' were withdrawn, they reflected principles that will guide the Board in reviewing individual disclosures and revising the regulation and the Board's model forms and clauses.

In the questions that follow, the Board seeks comment on ways to make the disclosures for open-end credit accounts more understandable and noticeable. Commenters are specifically requested to identify any particular concerns relating to the format of electronic disclosures.

Account-opening disclosures. TILA's account-opening disclosures are provided to consumers before the plan is opened (or before the first transaction). 15 U.S.C. 1637(a); 12 CFR 226.5(b)(1). Creditors typically provide the TILA disclosures in an account agreement that also contains contract terms and state-law disclosures. The agreement is typically a lengthy document in a small type size.

A primary purpose of the account-opening disclosures is to allow consumers to have key information about the account before they use the plan at all. Because consumers' use of the plan may change over time, however, these disclosures remain important over the life of the plan. Consumers may also refer to their account-opening disclosures when comparing the terms of their existing account to offers subsequently received from other card issuers. As stated above, data from a 2001 survey indicate that a significant number of consumers respond to solicitations for new credit card accounts.

Data from the 2001 survey of consumers with general purpose credit cards reveals that about two thirds of the respondents said that useful information on credit terms was either ''very easy'' or ''somewhat easy'' to obtain.[4] However, about three-fourths of consumers also agree (strongly or somewhat) with the statement that TILA statements ''are complicated.'' Nearly one-third suggested improvements could be made to the format and clarity of Truth in Lending disclosures at account opening or on monthly bills for general purpose credit cards, such as by providing information that is ''clearer, simpler, easier to understand, written in lay terms, or in larger print.''

The Board has received comments about the format of account-opening disclosures in connection with recent rulemakings. The views of the members of the Board's Consumer Advisory Council (CAC) have also been solicited. Many who commented believe that much of the information considered to be important is already contained in the disclosures; because a lot of information is provided at account opening, however, there is the potential for information overload, which can impair the disclosures' effectiveness. Accordingly, in connection with the review of Regulation Z, the Board proposes to consider ways to ease consumers' ability to navigate through the disclosures.

Several format changes have been suggested that might assist in this regard. Some members of the CAC believe that disclosures would be improved by including a page-one ''executive summary'' paragraph or a disclosure table to highlight key features and terms of the account, similar to the Schumer box disclosure provided with credit card solicitations. Such an executive summary need not be limited to information included in the Schumer box, but could incorporate other information, such as abbreviated description of items that, based on consumer surveys, are considered to be most important to consumers (*e.g.*, an annual fee, potential rate changes, amount of credit line, minimum monthly payment, special account benefits). Either as a part of this notion, or as a stand-alone change, consumers might benefit from a directory or ''table of contents'' box that would highlight for readers where specific terms might be found, to assist consumers in navigating through the document (for example, ''Late fees * * * see paragraphs 12, 14''). This concept addresses the anecdotal evidence that consumers often choose not to read the entire disclosure at once, but seek out information on specific terms from time

[3] For purposes of credit card application and solicitation disclosures, the ''clear and conspicuous'' standard is interpreted to mean that the disclosures must also be ''readily noticeable to the consumer.'' *See* Comment 5a(a)(2)–1.

[4] Thomas A. Durkin, *Consumers and Credit Disclosures: Credit Cards and Credit Insurance,* Federal Reserve Bulletin (April 2002), p. 207.

to time, at the outset of the account relationship and subsequently.

Q2. What formatting rules would enhance consumers' ability to notice and understand account-opening disclosures? Are rules needed to segregate certain key disclosures from contractual terms or other information so the disclosures are more clear and conspicuous? Should the rules require that certain disclosures be grouped together or appear on the same page? Are minimum type-size requirements needed, and if so, what should the requirements be?

Q3. Are there ways to use formatting tools or other navigational aids for TILA's account-opening disclosures that will make the disclosures more effective for consumers throughout the life of the account? If so, provide suggestions.

Periodic statements. TILA and Regulation Z contain few formatting rules for disclosures provided on periodic statements. Periodic statement disclosures provide information about account activity during the statement period; but consumers might also use information on the statements to make decisions about payments and the future use of their account, which affects the overall cost of credit. The Board solicits comment on the general need for format requirements for periodic statements, including the following:

Q4. Format rules could require certain disclosures to be grouped together or appear on the same page where it would aid consumer's understanding. For example, some card issuers disclose a 25-day grace period on the back of the periodic statement that can be used to calculate the payment due date; the same card issuer might also show a ''please pay by date'' on the front of the periodic statement that is based on a 20-day period. Some consumers might assume the 20-day period reflects the due date; other consumers may ascertain the actual due date by looking on the back of the statement. Potential consumer confusion might be reduced by requiring creditors to disclose the grace period or the actual due date on the first page of the statement, adjacent to the ''please pay by'' date. Is such a rule desirable? Are there other disclosures that should be grouped together on the same page?

Q5. Could the cost of credit be more effectively presented on periodic statements if less emphasis were placed on how fees are labeled, and all fees were grouped together on the periodic statement? Are there other approaches the Board should consider? If so, provide suggestions.

Q6. How could the use of formatting tools or other navigational aids make the disclosures on periodic statements more effective for consumers?

Credit card application disclosures (the ''Schumer box''). The disclosures required for credit card solicitations and applications have the most regimented format requirements. TILA disclosures must be presented in a table (known as the ''Schumer box'') with headings substantially similar to those published in the Board's model forms. (Format requirements for ''take-one'' applications are quite flexible; card issuers have the option to use the format required for direct-mail applications.)

In 2000, the Board revised the format requirements for these tabular disclosures. 65 FR 58903, October 3, 2000. The regulation's sole type-size requirement applies to direct-mail application disclosures; the APR for purchases must be in at least 18-point type size. 12 CFR 226.5a(b)(1). Also, the ''clear and conspicuous'' standard is interpreted to mean that application disclosures must be ''in a reasonably understandable form and readily noticeable to the consumer.'' Disclosures that are printed in a 12-point type size have a safe harbor in the regulation under this standard. Comment 5a(a)(2)–1.

Q7. Is the ''Schumer box'' effective as currently designed? Are there format issues the Board should consider? If so, provide suggestions.

Q8. Balance transfer fees and cash advance fees may be disclosed inside the ''Schumer box'' or clearly and conspicuously elsewhere on or with the application. 12 CFR 226.5a(a)(2)(i). Given the prevalence of balance transfer promotions in credit card applications and solicitations, should balance transfer fees be included in the Schumer box?

Subsequent disclosures. Creditors have great flexibility under TILA and Regulation Z in disclosing changes in account terms and the terms for new credit features or access devices offered after the account is opened.

Q9. Are there formatting tools or navigational aids that could more effectively link information in the account-opening disclosures with the information provided in subsequent disclosures, such as those accompanying convenience checks and balance transfer checks? If so, provide suggestions.

Model forms and clauses. The Board publishes model forms and model clauses to ease compliance. Creditors are not required to use these forms or clauses, but creditors that use them properly are deemed to be in compliance with the regulation regarding those disclosures. *See* 15 U.S.C. 1604(b). The Board has few model clauses and forms for account-opening or periodic statement disclosures.

Q10. Should existing clauses and forms be revised to improve their effectiveness? If so, provide specific suggestions.

Q11. Would additional model clauses or forms be helpful? If so, please identify the types of new model clauses and forms that the Board should consider developing.

Q12. In developing any proposed revisions or additions to the model forms or clauses, the Board plans to utilize consumer focus groups and other research. The Board is aware of studies suggesting that, for example, bolded headings that convey a message are helpful, but using all capital letters is not.[5] Is there additional information on the navigability and readability of different formats, and on ways in which formatting can improve the effectiveness of disclosures?

B. How Can the Content of Disclosures Be Improved or Simplified To Enhance Consumers' Understanding of the Cost of Credit?

TILA is designed to provide consumers with information about costs and terms to enable them to make comparisons among creditors and different credit programs, or determine whether they should use the credit line at all. In the questions that follow, the Board solicits comment generally on how the content of disclosures can be improved to enhance consumers' understanding about costs and terms. In addition, comment is specifically requested on how disclosures can be simplified while ensuring that consumers have the information they need to make informed decisions about the use of their credit accounts.

Can the Rules for Classifying and Labeling Fees as ''Finance charges'' and ''Other Charges'' Be Improved?

How a particular fee is classified affects when and how the fee is disclosed under TILA. Creditors offering open-end credit must disclose fees that are ''finance charges'' as well as ''other charges'' that are part of the credit plan.

A ''finance charge'' is broadly defined as any charge payable directly or indirectly by the consumer and imposed directly or indirectly by the creditor, as an incident to or a condition of the extension of credit. 15 U.S.C. 1605; 12 CFR 226.4. Interest, cash advance fees,

[5] Colin Wheildon, *Type & Layout; How Typography and Design Can Get Your Message Across—or Get in the Way,*'' Berkley: Strathmoor Press; Revised edition (March 1, 1995).

and balance transfer fees are examples of finance charges. Finance charges must be disclosed in the account-opening statement. If imposed in a particular billing cycle, finance charges must be disclosed on the periodic statement, where the fee must be labeled as a ''finance charge.'' If a finance charge fee increases, a change-in-terms notice is generally required. If imposed in a particular billing cycle, a finance charge must also be included in the effective (or ''historical'') APR, which expresses the total finance charge, not just interest, as an annual rate. 15 U.S.C. 1606(a)(2). Non-recurring loan fees, points, or similar finance charges related to the opening, renewing, or continuing of an open-end account are excluded from the effective APR. 12 CFR 226.14(c)(3), footnote 33, comment 14(c)–7.

If the fee is not a finance charge, but is significant and imposed as part of the plan, it is an ''other charge'' and must be disclosed at account-opening; on each applicable statement, though not with any particular label; and, for some but not all ''other charges,'' on a change-in-terms notice when the amount of the fee increases. 15 U.S.C. 1637(a)(5), 12 CFR 226.6(b), 7(h); comment 6(b)–1. Examples of ''other charges'' are penalty fees for late payment or exceeding a credit limit, and periodic membership or participation fees that are payable whether or not the consumer actually uses the credit plan.

If the fee is neither a finance charge nor an ''other charge'' (for example, returned check fees), TILA does not require that it be disclosed initially. If such a fee is charged to the consumer and billed to the account, the fee must be disclosed on the relevant periodic statement just as any other transaction item must be disclosed.

For the credit card industry as a whole, fee income has grown significantly in importance. With that trend, the types of fees creditors charge on open-end consumer credit accounts have grown in number and variety. As creditors charge new fees that are not specifically addressed by Regulation Z, creditors are sometimes unsure if the fee should be disclosed under TILA, and if so, whether it should be characterized as a finance charge or ''other charge.'' The rules for open-end accounts provide no tolerance for errors in disclosing the finance charge. In reviewing Regulation Z, the Board plans to consider whether there are ways to provide more clarity for creditors as to how particular fees should be classified.

Regulation Z follows TILA in giving the terms ''finance charge'' and ''other charge'' broad and flexible meanings. This ensures that the rules are adaptable to changing conditions, but also creates some degree of uncertainty. Regulation Z and the staff commentary diminish the uncertainty somewhat by expressly identifying examples of charges that constitute finance charges and types that do not. 15 U.S.C. 1605; 12 CFR 226.4(b) and (c). Nevertheless, rules that specifically address every fee generated in the marketplace are not practicable.

In response to a December 2002 staff proposal to clarify the status of two new fees in the staff commentary, many industry commenters called for a different approach to cost disclosures that would provide more certainty about fees' proper classification. 67 FR 72618, December 6, 2002; 68 FR 16185, April 3, 2003. Some industry commenters suggested that more certainty could be provided, for example, if fees were classified as finance charges based on whether payment of the fee is required as a condition to obtaining credit. They asserted that this standard would ease compliance and reduce litigation risks and promote comparison shopping by decreasing the risk that creditors might disclose the same fee differently.

Q13. How could the Board provide greater clarity on characterizing fees as finance charges or ''other charges'' imposed as part of the credit plan? Under Regulation Z, finance charges include fees imposed as a condition of the credit as well as fees imposed ''incident to'' the credit. This includes ''service, transaction, activity, and carrying charges.'' 12 CFR 226.4(b)(2). What types of fees imposed in connection with open-end accounts should be excluded from the finance charge, and why? How would these fees be disclosed to provide uniformity in creditors' disclosures and facilitate compliance?

Q14. How do consumers learn about the fees that will be imposed in connection with services related to an open-end account, and any changes in the applicable fees?

Q15. What significance do consumers attach to the label ''finance charge,'' as opposed to ''fee'' or ''charge''?

Q16. Some industry representatives have suggested a rule that would classify fees as finance charges only if payment of the fee is required to obtain credit. How would creditors determine if a particular fee was optional? Would costs for certain account features be excluded from the finance charge provided that the consumer was also offered a credit plan without that feature? Would such a rule result in useful disclosures for consumers? Would consumers be able to compare the cost of the different plans? Would such a rule be practicable for creditors?

Q17. Some industry representatives have suggested a rule that would classify a fee as a finance charge based on whether the fee affects the amount of credit available or the material terms of the credit. How would such a standard operate in practice? For example, how would creditors distinguish finance charges from ''other charges''? What terms of a credit plan would be considered material?

Q18. TILA requires the identification of other charges that are not finance charges and may be imposed as part of the plan. The staff commentary interprets the rule as applying to ''significant charges'' related to the plan. Has that interpretation been effective in furthering the purposes of the statute? Would another interpretation be more effective? Criteria that have been suggested as relevant to determining whether the Board should identify a charge as an ''other charge'' include: the amount of the charge; the frequency with which a consumer is likely to incur the charge; the proportion of consumers likely to incur the charge; and when and how creditors disclose the charge, if at all. Are those factors relevant? Are there other relevant factors?

Q19. What other issues should the Board consider as it addresses these questions? For instance, in classifying fees for open-end plans generally, do home equity lines of credit present unique issues?

Q20. How important is it that the rules used to classify fees for open-end accounts mirror the classification rules for closed-end loans? For example, the approach of excluding certain finance charges from the effective APR for open-end accounts is not consistent with the approach recommended by the Board for closed-end loans. In a 1998 report to the Congress concerning reform of closed-end mortgage disclosures, the Board endorsed an approach that would include ''all required fees'' in the finance charge and APR. (The report is at *http://www.federalreserve.gov/boarddocs/press/boardacts/1998.*)

Over-the-credit-limit fees. Anecdotal evidence indicates that ''penalty'' fees imposed on open-end credit accounts, such as over-the-credit-limit fees and late-payment fees, have increased in recent years. Adequate disclosure of over-the-credit-limit fees may be of particular importance to consumers who have low-limit credit card accounts.

Fees for paying late or exceeding a credit limit are disclosed with credit card applications and solicitations; in account-opening statements; and on periodic statements for billing cycles

when the fees are imposed. Although TILA does not specifically address the characterization of these fees, Regulation Z provides that the fees are not ''finance charges'' but must be disclosed as ''other charges.'' 12 CFR 226.4(c)(2); comment 6(b)–1. In a recent case involving the disclosure of an over-the-credit-limit fee, the United States Supreme Court upheld the Board's regulation excluding such fees from the finance charge. *See Household Credit Services* v. *Pfennig*, 541 U.S. 232 (2004).

Concerns have been raised about some card issuers' practice of allowing consumers to remain over their credit limit for multiple billing cycles. For example, a creditor may establish an initial credit limit, but once that limit is exceeded the creditor might not require the consumer to bring the account balance below the originally established credit limit. As a result, the creditor may impose an over-the-credit-limit fee on a continuing basis for each month the consumer carries a balance in excess of the original credit limit.

Q21. The staff commentary to Regulation Z provides guidance on when a fee is properly excluded from the finance charge as a bona fide late payment charge, and when it is not. *See* Comment 4(c)(2)–1. Is there a need for similar guidance with respect to fees imposed for exceeding a credit limit, for example, where the creditor does not require the consumer to bring the account balance below the originally established credit limit, but imposes an over-the-credit-limit fee each month on a continuing basis?

Q22. Because of technical limitations or other practical concerns, credit card transactions may be authorized in circumstances that do not allow the merchant or creditor to determine at the moment of the transaction whether the transaction will cause the consumer to exceed the previously established credit limit. How do card issuers explain to consumers their practice of approving transactions that might result in the consumer's exceeding the previously established credit limit for the account and being charged an over-the-credit-limit fee? When are over-the credit-limit fees imposed; at the time of an approved transaction, or later such as at the end of the billing cycle? The Board specifically requests comments on whether additional disclosures are needed regarding the circumstances in which over-the-credit-limit fees will be imposed.

How Do Consumers Use the ''Effective'' or ''Historical'' Annual Percentage Rate Disclosed on Periodic Statements?

Under TILA the finance charge is also disclosed as an annualized rate, the APR. The APR is based on the periodic rate (interest) for purposes of credit card solicitations and applications, account-opening disclosures, and advertisements for open-end plans. But for periodic statements, creditors must also disclose an ''effective'' or ''historical'' APR that includes any finance charges other than interest imposed during the billing cycle (such as cash advance fees). TILA requires non-interest finance charges to be amortized over one billing cycle for purposes of calculating the effective APR, and as a result, such fees can result in a high double-digit (or sometimes, triple-digit) effective APR on periodic statements. That is why under the regulation and staff commentary, non-recurring loan fees, points, or similar finance charges related to the opening, renewing, or continuing of an open-end account are currently excluded from the effective APR that is disclosed for a particular billing cycle.

The utility of disclosing the effective APR, which is mandated by the statute, is controversial. The legislative history of TILA suggests that Congress adopted the effective APR for open-end credit to ensure that the cost of credit in the form of transaction charges or minimum or fixed finance charges was fully and uniformly disclosed. The history also indicates that Congress was aware that the effective APR would vary from the nominal APR, possibly substantially, when such charges were imposed. Moreover, in at least one hearing Congress heard testimony that an effective APR would not be useful to consumers, and might confuse them.

Consumer advocates believe the effective APR is a key disclosure. They contend that a sharp rise in the APR caused by the imposition of a fee makes consumers more likely to notice the fee and, therefore, to understand that their action triggering the fee increased the overall cost of credit. Consumer advocates have also stated that the effective APR should be used by consumers in evaluating their credit options and how they might avoid such charges in the future. Consumer advocates sometimes refer to this theory as the ''shock value'' of the APR.

Over the years, industry representatives have provided comments questioning the value to consumers of disclosing the effective APR on periodic statements. They believe the effective APR could be eliminated without diminishing consumer protections because in their view it confuses consumers who do not understand how it differs from the APR based on the periodic interest rate. Industry representatives also assert that the effective APR overstates the cost of cash advances because it is based on amortizing the fees over one billing cycle even though some consumers may carry the advance for a longer period.

Q23. Have changes in the market and in consumers' use of open-end credit since the adoption of TILA affected the usefulness of the historical APR disclosure? If so, how? The Board seeks data relevant to determining the extent to which consumers understand and use the historical APR disclosed on periodic statements. Is there data on how disclosure of the historical APR affects consumer behavior? Is it useful to consumers to include in the historical APR transaction charges such as cash advance fees and fees to transfer balances from other accounts?

Q24. Are there ways to improve consumers' understanding of the effective APR, such as by providing additional context for the disclosure? For example, should consumers be informed that the effective APR includes fees as well as interest, and that it assumes the fees relate to credit that was extended only for a single billing period?

Q25. Are there alternative frameworks for disclosing the costs of credit on periodic statements that might be more effective than disclosing individual fees and the effective APR? For example, would consumers benefit from a disclosure of the total dollar amount of all account-related fees assessed during the billing cycle, or the total dollar amount of fees by type? Would a cumulative year-to-date total for certain fees be useful for consumers?

Disclosures about rate changes. Under Regulation Z, some changes to the terms of an open-end plan require additional notice. (The statute does not address changes in terms to open-end plans.) The general rule is that 15 days' advance notice is required to increase the finance charge (including the interest rate) or an annual fee. 12 CFR 226.9(c)(1). However, advance notice is not required in all cases. For example, if the interest rate or other finance charge increases due to a consumer's default or delinquency, notice is required, but need not be given in advance. 12 CFR 226.9(c)(1); comment 9(c)(1)–3. And no change-in-terms notice is required if the creditor specifies in advance the circumstances under which an increase to the finance charge or an annual fee will occur. Comment 9(c)–1. For example, some

credit card account agreements permit the card issuer to increase the interest rate if the consumer pays late, or if card issuer learns the consumer paid late on another credit account, even if the consumer has always paid the card issuer on time. Under Regulation Z, because the circumstances are specified in advance in the account agreement, the creditor need not provide a change-in-terms notice 15 days in advance of the increase; the new rate will appear on the periodic statement for the cycle in which the increase occurs.

Consumer advocates have expressed concerns that consumers who have triggered certain penalty rates may not be aware of the possibility of the increase, and thus are unable to shop for alternative financing before the increased rate takes effect.

Q26. Is mailing a notice 15 days before the effective date of a change in interest rates adequate to provide timely notice to consumers?

Q27. How are account-holders alerted to increased interest rates due to consumers' default on this account or another credit account? Are existing disclosure rules for increases to interest rates and other finance charges adequate to enable consumers to make timely decisions about how to manage their accounts? If not, provide suggestions.

Do Consumers Need Additional Information About Other Factors That Affect the Cost of Credit?

In addition to rates and fees, the cost of credit can also be affected by the creditor's method of calculating the outstanding credit balance; the size of the consumer's monthly payment; and the creditor's allocation of that payment among different charges and transactions. As explained below, the Board seeks comment on the need for regulatory revisions to enhance consumers' understanding of the effect of these factors on the cost of credit.

Balance calculation methods. Under TILA and Regulation Z, consumers receive information on how account balances are calculated for open-end accounts although TILA does not govern which calculation methods creditors must use. Creditors may identify common balance calculation methods by name on credit card application disclosures. The method is described in more detail in account-opening disclosures and on periodic statements. *See* 15 U.S.C. 1637(a)(2), (b)(7), (c)(1)(A)(iv); 12 CFR 226.5a(b)(6), 226.6(a)(3), 226.7(e). The Board has published model clauses for some common balance calculation methods. 12 CFR 226, Appendix G–1.

The balance calculation method used by a creditor can affect the cost of credit. For example, for purposes of assessing finance charges on unpaid balances, some creditors include balances from the previous cycle, although some do not. Others may include purchases made during the current cycle, although not all do.

Q28. How significantly does the balance calculation method affect the cost of credit given typical account use patterns?

Q29. Do consumers understand that different balance calculation methods affect the cost of credit, and do they understand which balance calculation methods are more or less favorable for consumers? Would additional disclosures at account-opening assist consumers and, if so, what type of disclosures would be useful?

Q30. Explanations of balance calculation methods are complex and may include contractual terms such as rounding rules. Precise explanations are required on account-opening disclosures and on periodic statements. Should the Board permit more abbreviated descriptions on periodic statements, along with a reference to where consumers can obtain further information about the calculation method, such as the credit agreement or a toll-free telephone number?

Disclosing the effects of making only minimum payments. Subject to any required minimum payment, consumers are free to decide each billing period how much to pay on outstanding balances. The consumer's payment amount each period affects the overall cost of credit, and can result in negative amortization if the payments are insufficient to cover the accrued interest charges. Furthermore, if a consumer's account balance exceeds the established credit limit and the consumer's payment is not large enough to bring the balance below the limit, an over-the-credit-limit fee might be assessed even if the payment satisfied the minimum amount specified by the creditor.

TILA and Regulation Z do not require disclosures associated with payment amounts, except to require an advance notice when a change in the method of calculating the minimum payment will increase it. 12 CFR 226.9(c)(1). Minimum-payment amounts are set by agreement and disclosed in the periodic statement at the creditor's option or because of other applicable law. The banking agencies, through the Federal Financial Institutions Examination Council, have provided guidance to card issuers on safety-and-soundness issues relating to minimum payments, but the guidance does not mandate particular consumer disclosures. *See* the Board's Division of Banking Supervision and Regulation SR 03–1, Account Management and Loss Allowance Methodology for Credit Card Lending, January 8, 2003.

In recent years, consumer advocates have raised concerns about whether consumers understand the effects of making only minimum payments on their open-end accounts. Provisions in certain proposed bankruptcy reform bills before Congress would require creditors to provide standardized examples of the time it would take to pay off an assumed balance if the consumer makes only the minimum payment. *See*, for example, Sec. 1301 of H.R. 975, 108th Congress. The bills would allow consumers to obtain an estimate of how long it would take to pay their actual account balance by calling a toll-free telephone number established by the creditor. Industry representatives note that disclosures based on the status of individual accounts are burdensome; they also say that the disclosure would not be helpful to consumers because it would be based on an unrealistic assumption that the consumer has stopped using the account for new extensions of credit.

Consumer advocates have also expressed concerns about open-end accounts that are specifically established to finance a single purchase that is equal to or nearly equal to the credit limit, because consumers do not receive disclosures about the total payment amount and the time it will take to repay the debt based on the minimum payment. But industry representatives have noted that requiring separate disclosures at account opening in such cases would unfairly disadvantage merchants' credit plans because issuers of general purpose credit cards would not provide such disclosures at the point of sale for an identical transaction.

Q31. Is it appropriate for the Board to consider whether Regulation Z should be amended to require: (1) Periodic statement disclosures about the effects of making only the minimum payment (such as, disclosing the amortization period for their actual account balance assuming that the consumer makes only the minimum payment, or disclosing when making the minimum payment will result in a penalty fee for exceeding the credit limit); (2) account-opening disclosures showing the total of payments when the credit plan is specifically established to finance purchases that are equal or nearly equal to the credit limit (assuming only minimum payments are made)? Would such disclosures benefit consumers?

Q32. Is information about the amortization period for an account readily available to creditors based on current accounting systems, or would new systems need to be developed? What would be the costs of implementing such a rule?

Q33. Is there data on the percentage of consumers, credit cardholders in particular, that regularly or continually make only the minimum payments on open-end credit plans?

Payment allocation. Some accounts that have multiple features apply different periodic rates to particular features such as purchases, cash advances, and balance transfers. How a consumer's payment is allocated to the balance for each feature affects the consumer's cost of credit. For example, assume a consumer has a $100 outstanding balance for purchases carrying a 0% promotional APR, and a $150 outstanding balance from cash advances carrying an 18% APR. If the consumer makes a $100 payment, and the payment is allocated first to the balance carrying the lowest rate (the purchase balance), the consumer will pay finance charges on $150, the entire cash advance balance. Had the creditor allocated the consumer's payment to the cash advance, the consumer would incur finance charges only on the remaining cash advance balance of $50.

A creditor's method for allocating payment may be included in the credit contract, but neither TILA nor Regulation Z requires a creditor to use a particular payment allocation method or to disclose the method it uses. Indeed, the staff commentary expressly indicates that disclosure of the allocation of payments is not required. Comment 6(a)(3)-2.

Q34. What are the common methods of payment allocation and how much do they affect the cost of credit for the typical consumer?

Q35. Do creditors typically disclose their allocation methods, and if so, how?

Q36. Is it appropriate for the Board to consider whether Regulation Z should be amended to require disclosure of the payment allocation method on the periodic statement? Would such a disclosure materially benefit consumers? Some creditors offer a low promotional rate, such as a 0% APR for cash advances for a limited time and a higher APR for purchases. Creditors typically do not allocate any payments to purchases until the entire cash advance is paid off. Are additional disclosures needed to avoid consumer confusion or misunderstanding? What would the cost be to creditors of providing such a disclosure? What level of detail would provide useful information while avoiding information overload?

Tolerances

TILA authorizes the Board to permit tolerances for numerical disclosures other than the APR. 15 U.S.C. 1631(d). Such tolerances are required to be narrow enough to prevent the tolerance from resulting in misleading disclosures or disclosures that circumvent the purposes of TILA.

Q37. What tolerances should the Board consider adopting pursuant to this provision? Should the Board expressly permit an overstatement of the finance charge on open-end credit? Would that adequately address concerns over proper disclosure of fees? How narrow should any tolerance be to ensure TILA's goal of uniformity is preserved?

Other Questions Regarding the Content of Disclosures

Q38. In considering changes to the disclosures required by Regulation Z, the Board seeks data relevant to the costs and benefits of the proposed revisions. Accordingly, commenters proposing revisions to the disclosure requirements are requested to provide data estimating the cost difference in complying with the existing rules compared to any proposed alternatives, including any one-time costs to implement the changes.

Q39. Are there particular types of open-end credit accounts, such as subprime or secured credit card accounts, that warrant special disclosure rules to ensure that consumers have adequate information about these products?

Q40. Are there additional issues the Board should consider in reviewing the content of open-end disclosures? For example, in 2000, the Board revised the requirements for disclosures that accompany credit card applications and solicitations. 65 FR 58903, October 3, 2000. Is the information currently provided with credit card applications and solicitations adequate and effective to assist consumers in deciding whether or not to apply for an account?

Q41. Are there classes of transactions for which the Board should exercise its exemption authority under 15 U.S.C. 1604(a) to effectuate TILA's purpose, facilitate compliance or prevent circumvention or evasion, or under 15 U.S.C. 1604(f) of TILA because coverage does not provide a meaningful benefit to consumers in the form of useful information or protection? If so, please address the factors that the Board is required to consider under the statute.

Q42. Should the Board exercise its authority under 15 U.S.C. 1604(g) to provide a waiver for certain borrowers whose income and assets exceed the specified amounts?

C. Is There a Need To Modify the Rules That Implement TILA's Substantive Protections for Open-End Accounts?

TILA and Regulation Z provide protections to consumers who obtain open-end credit. Some protections apply only to transactions involving credit cards; others apply to all extensions of credit under an open-end plan. Protections involving billing disputes generally allow consumers to avoid paying the disputed amount while the card issuer investigates the matter, and prohibit card issuers from assessing finance charges on the disputed amount or reporting the amount as delinquent until the investigation is completed. To summarize the rules:

- Consumers using an open-end credit plan may assert a billing error, which triggers creditors' duty to investigate the allegation within prescribed time limits. A ''billing error'' includes a periodic statement that reflects an extension of credit for property or services: (1) Not authorized by the consumer; or (2) not accepted by the consumer, or not delivered to the consumer as agreed (for example, when clothing is sent in the wrong size or color). A billing error also includes creditors' failure to credit payments or to deliver statements to a consumer's address of record. 15 U.S.C. 1666; 12 CFR 226.13.
- A cardholder may assert against the card issuer a claim or defense for defective goods or services purchased with a credit card, as to unpaid balances for the goods or services, if the merchant honoring the card fails to resolve the dispute. This right is limited to disputes exceeding $50 for purchases made in the consumer's home state or within 100 miles. 15 U.S.C. 1666i; 12 CFR 226.12(c).
- Cardholders' liability for the unauthorized use of a credit card is capped at $50. But cardholders have no liability for charges made after notification is given to the card issuer, or charges made when the card itself (or other sufficient means of identifying the cardholder) is not presented. 15 U.S.C. 1643; 12 CFR 226.12(b).
- Credit cards may be issued to consumers only upon request. One or more credit cards may be issued to cardholders in renewal of, or substitution for, an accepted card, with some conditions. 15 U.S.C. 1642; 12 CFR 226.12(a).

• Payments received from a consumer on an open-end credit plan must be posted promptly to the consumer's account. Under Regulation Z, payments generally must be credited to a consumer's account as of the date of receipt, except when a delay in crediting does not result in a finance charge or ''other charge'' being imposed. Creditors may specify requirements for the consumer to follow in making payments. 15 U.S.C. 1666c; 12 CFR 226.10.

Q43. The Board solicits comments on whether there is a need to revise the provisions implementing TILA's substantive protections for open-end credit accounts. For example, are the existing rules adequate, and if not, why not? Are creditors' responsibilities under the rules clear? Do the existing rules need to be updated to address particular types of accounts or practices, or to address technological changes?

Accessing credit card accounts. TILA defines a credit card as ''any card, plate, coupon book or other credit device existing for the purpose of obtaining money, property, labor, or services on credit.'' 15 U.S.C. 1602(k). In addition, Regulation Z provides that a credit card must be a device ''that may be used from time to time to obtain credit.''12 CFR 226.2(a)(15).

It is increasingly common for consumers to access their credit card plans without presenting the card, for example, in making purchases over the Internet and by telephone. Credit card transactions conducted by telephone or Internet receive all of TILA's protections, even though the physical device is not presented to the merchant when the account number is transmitted.

Q44. Information is requested on whether industry has developed, or is developing, open-end credit plans that allow consumers to conduct transactions using only account numbers and do not involve the issuance of physical devices traditionally considered to be credit cards. If such plans exist, what policies do such creditors have for resolving accountholder claims when disputes arise?

''*Convenience checks.*'' Credit card issuers also provide account-holders with ''convenience checks'' that can be used to obtain cash, purchase goods or services, or pay the outstanding balance on another account. Convenience checks are mailed to consumers unsolicited, sometimes with consumers' monthly statements. The amount of each check issued by the consumer will be billed to the consumers' credit card account. Convenience checks allow consumers to use their credit card account to finance the purchase of goods or services at merchants that do not accept credit cards. Anecdotal evidence also suggests convenience checks are used for large-dollar transactions, such as college tuition payments.

Currently, a convenience check is not treated as a credit card under Regulation Z because it can be used only once and not ''from time to time.'' Although the rules for resolving billing errors apply to all transactions conducted under an open-end plan, including those involving convenience checks, TILA's protections regarding merchant disputes, unauthorized use of the account, and the prohibition against unsolicited issuance apply only to credit cards and do not cover transactions using convenience checks.[6]

In discussing the issue at the October 2003 meeting of the Board's Consumer Advisory Council, some members stated that Regulation Z's protections for credit cards should be revised to apply to all credit extended under a credit card account, whether the card itself or another device, such as a convenience check, is used. They noted that the Board could cover convenience checks by revising the regulation's definition of a ''credit card'' for this purpose, to eliminate the requirement that the device be usable ''from time to time.'' But others stated that convenience checks should not be covered by TILA's protections and should be treated the same way as a check drawn on a deposit account.

Q45. Have consumers experienced problems with convenience checks relating to unauthorized use or merchant disputes, for example? Should the Board consider extending any of TILA's protections for credit card transactions to other extensions on credit card accounts and, in particular, convenience checks?

Unsolicited issuance of credit cards. Limitations on issuing unsolicited credit cards were added to TILA in 1970 to address concerns about theft, inconvenience to consumers, and consumers' management of their personal finances. TILA generally prohibits creditors from issuing credit cards except in response to a request or application but exempts cards issued as renewals or substitutions to replace an accepted card. 15 U.S.C. 1642.

In 2003, Board staff revised the commentary to the relevant provision of Regulation Z, § 226.12(a), to allow card issuers to replace an accepted card with more than one card, subject to certain conditions. 68 FR 16185, April 3, 2003. Based on the revisions, card issuers can, for example, issue credit cards using a new format or technology to existing accountholders, even though the new card is intended to supplement rather than replace the traditional card. Based on the public comments, staff stated it planned to recommend that the Board consider amending § 226.12(a) to allow the unsolicited issuance of additional cards on an existing account even when the accountholder's existing card is not being replaced, under certain conditions.

Q46. Should the Board consider revising Regulation Z to allow creditors to issue additional credit cards on an existing account at any time, even when there is no renewal or substitution of a previously issued card? If so, what conditions or limitations should apply? For example, should the Board require that the additional cards be sent unactivated? If activation is required, should the Board allow issuers to use alternative security measures in lieu of activation, such as providing advance written notice to consumers that additional cards will be sent?

Prompt Crediting of Payments

Payments received from a consumer on an open-end credit plan must be credited to the account as of the date the payment is received by the creditor. Creditors cannot impose a finance charge or ''other charge'' if the creditor has received payment in a readily identifiable form in the amount, manner, location, and time indicated by the creditor to avoid the imposition of the charge. 12 CFR 226.10(a). Creditors may specify requirements for making payments such as setting a cut-off hour for payment to be received, but the requirements must be reasonable and it should not be difficult for most consumers to make conforming payments. Comments 10(b)–1, –2.

Consumer advocates have raised concerns about the reasonableness of card issuers' cut-off hours. They note that some creditors' service centers are open 24 hours 7 days a week to receive mail delivery and electronic payments continuously. In addition, questions have arisen concerning creditors' use of third-party payments processors, and whether the receipt of payments by the third-party is deemed to be receipt by the creditor.

Q47. What are the cut-off hours used by most issuers for receiving payments? How do issuers determine the cut-off hours?

[6] For convenience checks, the Uniform Commercial Code (UCC) provisions governing checks apply; under the UCC a consumer generally has no liability for a forged check. UCC 4–401, 3–401.

Q48. Do card issuers' payment instructions and cut-off hours differ according to whether the consumer makes the payment by check or electronic fund transfer, or by using the telephone or Internet? What is the proportion of consumers who make payments by mail as opposed to using expedited methods, such as electronic payments?

Q49. Do the existing rules and creditors' current disclosure practices clearly inform cardholders of the date and time by which card issuers must receive payment to avoid additional fees? If not, how might disclosure requirements be improved?

Q50. Do the operating hours of third-party processors differ from those of creditors, and if so, how? Do creditors treat payments received by a third-party processor as if the payment was received by the creditor? What guidance, if any, is needed concerning creditors' obligation in posting and crediting payments when third-party processors are used?

Q51. Should the Board issue a rule requiring creditors to credit payments as of the date they are received, regardless of the time?

VI. Request for Comment on Additional Issues

In addition to responding to the Board's request for comments on the open-end credit issues identified above, the Board invites the public to discuss other ways that Regulation Z might be improved and to provide specific suggestions for implementing those changes, including:

Q52. *Providing guidance not expressly addressed in existing rules.* Board staff is asked to provide informal oral advice on an ongoing basis about how Truth in Lending rules may apply to new products and circumstances not expressly addressed in Regulation Z and its official staff commentary. The Board invites the public to identify issues where they believe staff's informal advice should be formalized or addressed anew. Should such changes be adopted after notice and public comment, they would apply prospectively and compliance would become mandatory after an appropriate implementation period.

Q53. *Adjusting exceptions based on de minimis amounts.* To facilitate compliance, the Board has provided a number of exceptions based on *de minimis* dollar amounts. For example, TILA's open-end rules require creditors to transmit periodic statements at the end of billing cycles in which there is an outstanding balance or a finance charge is imposed; the regulation relieves creditors of that duty if the outstanding debit or credit balance is $1 or less (and no finance charge is imposed). 15 U.S.C. 1637(b); 12 CFR 226.5(b)(2)(i). Similarly, the Board provides for a simplified way to calculate the effective APR on periodic statements when a minimum finance charge is assessed and is 50 cents or less. 12 CFR 226.14(c)(4). Should *de minimis* amounts such as these be adjusted, and if so, to what extent?

Q54. *Improving plain language and organization; identifying technical revisions.* The Board is required to use ''plain language'' in all proposed and final rules published after January 1, 2000. 12 U.S.C. 4809. The Board invites comments on whether the existing rules are clearly stated and effectively organized, and how, in the upcoming review of Regulation Z, the Board might consider making the text of Regulation Z and its official staff commentary easier to understand. Are there technical revisions to the regulation or commentary that should be addressed?

Q55. *Deleting obsolete rules or guidance.* A goal of the Regulation Z review is to delete provisions that have become obsolete due to technological or other developments. Are there any such provisions?

Q56. *Recommendations for legislative changes.* Are there any legislative changes to TILA the Board should consider recommending to the Congress? For example, where a rule is based on a dollar amount established by the statute, the Board seeks comment on whether to recommend adjustments of those dollar amounts to the Congress, and if so, the amount of such adjustments.

Q57. *Recommendations for nonregulatory approaches.* In addition to requesting comment on suggestions for regulatory or statutory changes, the Board seeks comment on nonregulatory approaches that may further the Board's goal of improving the effectiveness of TILA's disclosures and substantive protections. Such approaches could include guidance in the form of best practices or consumer education efforts. For example, calculation tools are widely available on the Internet. How might the availability of those tools be used to address concerns that consumers need better information about the effects of making only minimum payments on their account? Are there any data that indicate the extent to which consumers access calculation tools that are publicly available?

Q58. *Reviewing other aspects of Regulation Z.* Although the Board is proposing to focus the review primarily on the rules for open-end credit, are there other areas or particular sections of Regulation Z that should be included in this initial stage of the review? For example:

(a) *Definitions and rules of construction.* Are changes needed to the definitions or rules of construction in § 226.2 of the regulation? Unless defined in the regulation, terms have the meaning given to them by state law or contract. Are there specific terms that are not defined in Regulation Z that should be? For example, the Board's staff has received questions about § 226.20, which generally requires creditors to provide new TILA disclosures when a closed-end loan is refinanced. Under the regulation and staff commentary, a ''refinancing'' is generally deemed to occur when an existing obligation has been satisfied and replaced by a new obligation, ''based on the parties'' contract and applicable law.'' *See* Comment 20(a)–1. Concerns have been raised about the current approach, and whether it results in uniform application of Regulation Z because different states are free to draw different conclusions about when a particular set of circumstances constitutes a ''satisfaction and replacement.'' Courts may take a case-by-case approach to ascertain the parties' intent before deciding whether a new promissory note satisfied and replaced the original note, or whether the new note merely ''relates back'' to the original note that is not deemed to be extinguished. The issue raised is whether the Board should consider adopting a definition of ''refinancing'' that does not rely on state law and seeks to create a more uniform approach in determining when new disclosures are required.

(b) *Exempt transactions.* Section 226.3 of Regulation Z implements the provisions of 15 U.S.C. 1603, which specifies classes of transactions not covered by TILA. Do rules implementing 15 U.S.C. 1603 need to be updated?

VII. Plans for Reviewing Other Areas

Although the focus of this ANPR is TILA and Regulation Z's rules for open-end credit not secured by a home, the Board has the following plans for reviewing other areas of Regulation Z:

- *Predatory mortgage lending.* Issues related to predatory mortgage lending will be examined in public hearings held pursuant to the Home Ownership and Equity Protection Act (HOEPA), which amended TILA in 1994. HOEPA uses rate and fee triggers to identify a class of high-cost closed-end mortgage loans, and it provides consumers

entering into these transactions with additional disclosures and special protections. HOEPA requires that the Board periodically hold public hearings on home-equity lending and the adequacy of protections under HOEPA. After holding hearings in 2000, the Board amended the rules implementing HOEPA, which became effective on October 1, 2002. Board staff plans to ask the Board to consider holding further hearings under HOEPA during 2006.

• *Closed-end mortgage credit.* From 1996 to 1998, the Board and HUD studied possible regulatory changes to TILA and the Real Estate Settlement Procedures Act (RESPA) to improve mortgage-related disclosures. The Board concluded that meaningful changes to the disclosures required legislative action. The Board and HUD submitted a joint report to the Congress outlining a framework that could be used as a starting point for considering legislative changes. Although legislation has not been enacted, in 2002 HUD commenced a rulemaking that sought to adopt many of the changes recommended in the Board-HUD joint report. HUD's proposal was not finalized, and HUD has announced that it will issue a revised proposal for public comment in the near future. The Board believes that significant changes to mortgage disclosures under TILA would best be considered in connection with HUD's future rulemaking.

• *Home-equity lines of credit and adjustable-rate mortgage loans.* Staff plans to initiate a separate review, in 2005, of Regulation Z's rules requiring brochures and generic disclosures when consumers obtain applications for closed-end adjustable-rate mortgages (ARMs) and open-end home-equity lines of credit (HELOCs). The issues to be considered deal mainly with variable-rate mortgage lending, which are distinct from issues affecting general open-end credit rules. The ARM rules would be reviewed in consultation with the other federal agencies. Because the HELOC and ARM rules are similar, these rules are best reviewed simultaneously to maximize consistency.

By order of the Board of Governors of the Federal Reserve System.

Dated: December 3, 2004.

Jennifer J. Johnson,

Secretary of the Board.

[FR Doc. 04–26935 Filed 12–7–04; 8:45 am]

BILLING CODE 6210–01–P

DEPARTMENT OF TRANSPORTATION

Federal Aviation Administration

14 CFR Part 39

[Docket No. FAA–2004–19812; Directorate Identifier 2003–NM–197–AD]

RIN 2120–AA64

Airworthiness Directives; Boeing Model 747–100, –100B, –100B SUD, –200B, –200C, –200F, and –300 Series Airplanes; and Model 747SP and 747SR Series Airplanes; Equipped With Pratt and Whitney Model JT9D–3 or –7 (except –70) Series Engines

AGENCY: Federal Aviation Administration (FAA), DOT.

ACTION: Notice of proposed rulemaking (NPRM).

SUMMARY: The FAA proposes to adopt a new airworthiness directive (AD) for certain Boeing transport category airplanes. This proposed AD would require repetitive detailed inspections to detect cracking of the aft and forward surfaces of the bulkhead web at nacelle station 180, and repair if necessary. This proposed AD is prompted by reports of cracking of the web bulkhead at nacelle station 180. We are proposing this AD to detect and correct fatigue cracking of the web bulkhead, and consequent loss of the load path of the bulkhead at nacelle station 180, which when combined with the loss of the midspar load path, could result in the in-flight separation of the engine and strut. Such separation may result in secondary damage to the airplane and consequent reduced controllability of the airplane.

DATES: We must receive comments on this proposed AD by January 24, 2005.

ADDRESSES: Use one of the following addresses to submit comments on this proposed AD.

• DOT Docket Web site: Go to *http://dms.dot.gov* and follow the instructions for sending your comments electronically.

• Government-wide rulemaking Web site: Go to *http://www.regulations.gov* and follow the instructions for sending your comments electronically.

• Mail: Docket Management Facility, U.S. Department of Transportation, 400 Seventh Street, SW., Nassif Building, room PL–401, Washington, DC 20590.

• By fax: (202) 493–2251.

• Hand Delivery: Room PL–401 on the plaza level of the Nassif Building, 400 Seventh Street, SW., Washington, DC, between 9 a.m. and 5 p.m., Monday through Friday, except Federal holidays.

For service information identified in this proposed AD, contact Boeing Commercial Airplanes, P.O. Box 3707, Seattle, Washington 98124–2207.

You can examine the contents of this AD docket on the Internet at *http://dms.dot.gov,* or in person at the Docket Management Facility, U.S. Department of Transportation, 400 Seventh Street, SW., room PL–401, on the plaza level of the Nassif Building, Washington, DC.

FOR FURTHER INFORMATION CONTACT: *Technical information:* Tamara Anderson, Aerospace Engineer, Airframe Branch, ANM–120S, FAA, Seattle Aircraft Certification Office, 1601 Lind Avenue, SW., Renton, Washington 98055–4056; telephone (425) 917–6421; fax (425) 917–6590.

Plain language information: Marcia Walters, *marcia.walters@faa.gov.*

SUPPLEMENTARY INFORMATION:

Docket Management System (DMS)

The FAA has implemented new procedures for maintaining AD dockets electronically. As of May 17, 2004, new AD actions are posted on DMS and assigned a docket number. We track each action and assign a corresponding directorate identifier. The DMS AD docket number is in the form ''Docket No. FAA–2004–99999.'' The Transport Airplane Directorate identifier is in the form ''Directorate Identifier 2004–NM–999–AD.'' Each DMS AD docket also lists the directorate identifier (''Old Docket Number'') as a cross-reference for searching purposes.

Comments Invited

We invite you to submit any relevant written data, views, or arguments regarding this proposed AD. Send your comments to an address listed under **ADDRESSES.** Include ''Docket No. FAA–2004–19812; Directorate Identifier 2003–NM–197–AD'' in the subject line of your comments. We specifically invite comments on the overall regulatory, economic, environmental, and energy aspects of the proposed AD. We will consider all comments submitted by the closing date and may amend the proposed AD in light of those comments.

We will post all comments we receive, without change, to *http://dms.dot.gov,* including any personal information you provide. We will also post a report summarizing each substantive verbal contact with FAA personnel concerning this proposed AD. Using the search function of that Web site, anyone can find and read the comments in any of our dockets, including the name of the individual who sent the comment (or signed the comment on behalf of an association, business, labor union, etc.). You can

review DOT's complete Privacy Act Statement in the **Federal Register** published on April 11, 2000 (65 FR 19477–78), or you can visit *http://dms.dot.gov.*

We are reviewing the writing style we currently use in regulatory documents. We are interested in your comments on whether the style of this document is clear, and your suggestions to improve the clarity of our communications that affect you. You can get more information about plain language at *http://www.faa.gov/language* and *http://www.plainlanguage.gov.*

Examining the Docket

You can examine the AD docket on the Internet at *http://dms.dot.gov,* or in person at the Docket Management Facility office between 9 a.m. and 5 p.m., Monday through Friday, except Federal holidays. The Docket Management Facility office (telephone (800) 647–5227) is located on the plaza level of the Nassif Building at the DOT street address stated in the **ADDRESSES** section. Comments will be available in the AD docket shortly after the DMS receives them.

Discussion

We have received several reports of cracking of the web bulkhead at nacelle station 180 on several Boeing Model 747 airplanes equipped with Pratt and Whitney Model JT9D–3 and –7 (except –70) series engines. These airplanes had approximately 4,100 to 18,500 total flight cycles and 23,500 to 89,100 total flight hours. The cracking was caused by fatigue and sonic-induced vibration. Fatigue cracking of the web bulkhead, if not detected and corrected, could result in the loss of the load path of the bulkhead at nacelle station 180, which when combined with the loss of the midspar load path, could result in the in-flight separation of the engine and strut. Such separation may result in secondary damage to the airplane and consequent reduced controllability of the airplane.

Relevant Service Information

We have reviewed Boeing Alert Service Bulletin 747–54A2220, dated July 31, 2003. The service bulletin describes procedures for repetitive detailed inspections to detect cracking of the aft and forward surfaces of the bulkhead web at nacelle station 180, and repair if necessary. The compliance time for the repetitive detailed inspections is either 600 or 1,200 flight cycles, depending on the configuration of the airplane. Accomplishing the actions specified in the service information is intended to adequately address the unsafe condition.

FAA's Determination and Requirements of the Proposed AD

We have evaluated all pertinent information and identified an unsafe condition that is likely to exist or develop on other airplanes of this same type design. Therefore, we are proposing this AD, which would require you to use the service information described previously to perform these actions, except as discussed under ''Difference Between the Proposed AD and Service Bulletin.''

Difference Between Proposed AD and Service Bulletin

The service bulletin specifies that you should repair cracks in accordance with the applicable 747 Structural Repair Manual (SRM), but this proposed AD would require you to repair any crack that exceeds the repair limits specified in the applicable SRM in one of the following ways:

- Using a method that we approve; or
- Using data that meet the type certification basis of the airplane, and that have been approved by a Boeing Company Designated Engineering Representative who has been authorized by the FAA to make those findings.

Costs of Compliance

This proposed AD would affect about 223 airplanes worldwide and 73 airplanes of U.S. registry. The proposed actions would take about 1 work hour per airplane, at an average labor rate of $65 per work hour. Based on these figures, the estimated cost of the proposed AD for U.S. operators is $4,745, or $65 per airplane, per inspection cycle.

Regulatory Findings

We have determined that this proposed AD would not have federalism implications under Executive Order 13132. This proposed AD would not have a substantial direct effect on the States, on the relationship between the national Government and the States, or on the distribution of power and responsibilities among the various levels of government.

For the reasons discussed above, I certify that the proposed regulation:

1. Is not a ''significant regulatory action'' under Executive Order 12866;

2. Is not a ''significant rule'' under the DOT Regulatory Policies and Procedures (44 FR 11034, February 26, 1979); and

3. Will not have a significant economic impact, positive or negative, on a substantial number of small entities under the criteria of the Regulatory Flexibility Act.

We prepared a regulatory evaluation of the estimated costs to comply with this proposed AD. See the **ADDRESSES** section for a location to examine the regulatory evaluation.

List of Subjects in 14 CFR Part 39

Air transportation, Aircraft, Aviation safety, Safety.

The Proposed Amendment

Accordingly, under the authority delegated to me by the Administrator, the FAA proposes to amend 14 CFR part 39 as follows:

PART 39—AIRWORTHINESS DIRECTIVES

1. The authority citation for part 39 continues to read as follows:

Authority: 49 U.S.C. 106(g), 40113, 44701.

§ 39.13 [Amended]

2. The FAA amends § 39.13 by adding the following new airworthiness directive (AD):

Boeing: Docket No. FAA–2004–19812; Directorate Identifier 2003–NM–197–AD.

Comments Due Date

(a) The Federal Aviation Administration (FAA) must receive comments on this AD action by January 24, 2005.

Affected ADs

(b) None.

Applicability

(c) This AD applies to Boeing Model 747–100, –100B, –100B SUD, –200B, –200C, –200F, and ''300 series airplanes; and Model 747SP and 747SR series airplanes; equipped with Pratt and Whitney Model JT9D–3, or –7 (except for –70) series engines; as identified in Boeing Alert Service Bulletin 747–54A2220, dated July 31, 2003; certificated in any category.

Unsafe Condition

(d) This AD was prompted by reports of cracking of the web bulkhead at nacelle station 180. We are issuing this AD to detect and correct fatigue cracking of the web bulkhead, and consequent loss of the load path of the bulkhead at nacelle station 180, which when combined with the loss of the midspar load path, could result in the in-flight separation of the engine and strut. Such separation may result in secondary damage to the airplane and consequent reduced controllability of the airplane.

Compliance

(e) You are responsible for having the actions required by this AD performed within the compliance times specified, unless the actions have already been done.

Repetitive Inspections and Repair

(f) Within 9 months after the effective date of this AD, do a detailed inspection to detect

cracking of the aft and forward surfaces of the bulkhead web at nacelle station 180, in accordance with the Accomplishment Instructions of Boeing Alert Service Bulletin 747–54A2220, dated July 31, 2003.

(1) If no cracking is detected, repeat the detailed inspection at the applicable intervals specified in the ''Repeat Inspection Interval'' column of Tables 1 and 2 in Figure 1 of the service bulletin.

(2) If any cracking is detected, before further flight, repair the cracking in accordance with the service bulletin, except as provided by paragraph (f)(3) of this AD. Thereafter, repeat the detailed inspection at the applicable intervals specified in the ''Repeat Inspection Interval'' column of Tables 1 and 2 in Figure 1 of the service bulletin.

(3) If any cracking exceeds the repair limits specified in the applicable Structural Repair Manual (referenced in the service bulletin), before further flight, repair the cracking in accordance with a method approved by the Manager, Seattle Aircraft Certification Office (ACO), FAA; or in accordance with data meeting the type certification basis of the airplane approved by a Boeing Company Designated Engineering Representative who has been authorized by the Manager, Seattle ACO, to make such findings. For a repair method to be approved, the approval must specifically reference this AD.

Alternative Methods of Compliance (AMOCs)

(g)(1) The Manager, Seattle ACO, FAA, has the authority to approve AMOCs for this AD, if requested in accordance with the procedures found in 14 CFR 39.19.

(2) An AMOC that provides an acceptable level of safety may be used for any repair required by this AD, if it is approved by a Boeing Company Designated Engineering Representative who has been authorized by the Manager, Seattle ACO, to make those findings. For a repair method to be approved, the approval must specifically refer to this AD.

Issued in Renton, Washington, on November 30, 2004.

Ali Bahrami,

Manager, Transport Airplane Directorate, Aircraft Certification Service.

[FR Doc. 04–26920 Filed 12–7–04; 8:45 am]

BILLING CODE 4910–13–P

DEPARTMENT OF TRANSPORTATION

Federal Aviation Administration

14 CFR Part 39

[Docket No. FAA–2004–19766; Directorate Identifier 2002–NM–161–AD]

RIN 2120–AA64

Airworthiness Directives; BAE Systems (Operations) Limited (Jetstream) Model 4101 Airplanes

AGENCY: Federal Aviation Administration (FAA), DOT.

ACTION: Notice of proposed rulemaking (NPRM).

SUMMARY: The FAA proposes to adopt a new airworthiness directive (AD) for all BAE Systems (Operations) Limited (Jetstream) Model 4101 airplanes. This proposed AD would require replacing the aileron trim chain with a new, improved aileron trim chain, and modifying the installation of the aileron trim chain. This proposed AD is prompted by a report that the aileron trim cables were connected incorrectly on a correctly installed aileron trim chain. We are proposing this AD to prevent incorrect connection of the aileron trim cables, which could result in failure of the aileron trim system and consequent reduced controllability of the airplane.

DATES: We must receive comments on this proposed AD by January 7, 2005.

ADDRESSES: Use one of the following addresses to submit comments on this proposed AD.

- DOT Docket Web site: Go to *http://dms.dot.gov* and follow the instructions for sending your comments electronically.
- Government-wide rulemaking Web site: Go to *http://www.regulations.gov* and follow the instructions for sending your comments electronically.
- Mail: Docket Management Facility, U.S. Department of Transportation, 400 Seventh Street, SW., Nassif Building, room PL–401, Washington, DC 20590.
- By fax: (202) 493–2251.
- Hand Delivery: Room PL–401 on the plaza level of the Nassif Building, 400 Seventh Street, SW., Washington, DC, between 9 a.m. and 5 p.m., Monday through Friday, except Federal holidays.

For service information identified in this proposed AD, contact British Aerospace Regional Aircraft American Support, 13850 Mclearen Road, Herndon, Virginia 20171.

You can examine the contents of this AD docket on the Internet at *http://dms.dot.gov,* or in person at the Docket Management Facility, U.S. Department of Transportation, 400 Seventh Street, SW., room PL–401, on the plaza level of the Nassif Building, Washington, DC. This docket number is FAA–2004–19766; the directorate identifier for this docket is 2002–NM–161–AD.

FOR FURTHER INFORMATION CONTACT:

Technical information: Todd Thompson, Aerospace Engineer, International Branch, ANM–116, FAA, Transport Airplane Directorate, 1601 Lind Avenue, SW., Renton, Washington 98055–4056; telephone (425) 227–1175; fax (425) 227–1149.

Plain language information: Marcia Walters, *marcia.walters@faa.gov.*

SUPPLEMENTARY INFORMATION:

Docket Management System (DMS)

The FAA has implemented new procedures for maintaining AD dockets electronically. As of May 17, 2004, new AD actions are posted on DMS and assigned a docket number. We track each action and assign a corresponding directorate identifier. The DMS AD docket number is in the form ''Docket No. FAA–2004–99999.'' The Transport Airplane Directorate identifier is in the form ''Directorate Identifier 2004–NM–999–AD.'' Each DMS AD docket also lists the directorate identifier (''Old Docket Number'') as a cross-reference for searching purposes.

Comments Invited

We invite you to submit any relevant written data, views, or arguments regarding this proposed AD. Send your comments to an address listed under **ADDRESSES**. Include ''Docket No. FAA–2004–19766; Directorate Identifier 2002–NM–161–AD'' at the beginning of your comments. We specifically invite comments on the overall regulatory, economic, environmental, and energy aspects of the proposed AD. We will consider all comments submitted by the closing date and may amend the proposed AD in light of those comments.

We will post all comments we receive, without change, to *http://dms.dot.gov,* including any personal information you provide. We will also post a report summarizing each substantive verbal contact with FAA personnel concerning this proposed AD. Using the search function of our docket Web site, anyone can find and read the comments in any of our dockets, including the name of the individual who sent the comment (or signed the comment on behalf of an association, business, labor union, etc.). You can review the DOT's complete Privacy Act Statement in the **Federal Register** published on April 11, 2000 (65 FR 19477–78), or you can *visit http://dms.dot.gov.*

We are reviewing the writing style we currently use in regulatory documents. We are interested in your comments on whether the style of this document is clear, and your suggestions to improve the clarity of our communications that affect you. You can get more information about plain language at *http://www.faa.gov/language* and *http://www.plainlanguage.gov.*

Examining the Docket

You can examine the AD docket on the Internet at *http://dms.dot.gov,* or in person at the Docket Management

Facility office between 9 a.m. and 5 p.m., Monday through Friday, except Federal holidays. The Docket Management Facility office (telephone (800) 647–5227) is located on the plaza level of the Nassif Building at the DOT street address stated in the **ADDRESSES** section. Comments will be available in the AD docket shortly after the DMS receives them.

Discussion

The Civil Aviation Authority (CAA), which is the airworthiness authority for the United Kingdom, notified us that an unsafe condition may exist on all BAE Systems (Operations) Limited (Jetstream) Model 4101 airplanes. The CAA advises that, during a test flight following maintenance work, the aileron trim system did not function correctly. Investigation revealed that the aileron trim cables were connected incorrectly (cross-connected), though the aileron trim chain was installed correctly. This condition, if not corrected, could result in failure of the aileron trim system and consequent reduced controllability of the airplane.

Relevant Service Information

BAE Systems (Operations) Limited has issued Service Bulletin J41–27–061, Revision 1, dated July 12, 2002. The service bulletin describes procedures for replacing the aileron trim chain with a new, improved aileron trim chain, and modifying the installation of the aileron trim chain. The aileron trim cables cannot be cross-connected on the new aileron trim chain. Thus, accomplishing the actions specified in the service information is intended to adequately address the unsafe condition. The CAA mandated the service information and issued British airworthiness directive 006–11–2001 to ensure the continued airworthiness of these airplanes in the United Kingdom.

FAA's Determination and Requirements of the Proposed AD

This airplane model is manufactured in the United Kingdom and is type certificated for operation in the United States under the provisions of section 21.29 of the Federal Aviation Regulations (14 CFR 21.29) and the applicable bilateral airworthiness agreement. Pursuant to this bilateral airworthiness agreement, the CAA has kept the FAA informed of the situation described above. We have examined the CAA's findings, evaluated all pertinent information, and determined that we need to issue an AD for products of this type design that are certificated for operation in the United States.

Therefore, we are proposing this AD, which would require accomplishing the actions specified in the service information described previously, except as discussed under ''Differences Among the Proposed AD, Service Information, and British Action.''

Differences Among the Proposed AD, Service Information, and British Action

British airworthiness directive 006–11–2001 specifies a compliance time of ''not later than the next aileron trim circuit break down, or by 31 March 2005, whichever is the sooner.'' This proposed AD specifies a compliance time of 30 months after the effective date of this AD. We find that this is a compliance time that is comparable in length to that in the British airworthiness directive, will allow the majority of operators sufficient time to accomplish the proposed action during a regularly scheduled maintenance visit, and will not compromise safety.

The Accomplishment Instructions of the referenced service bulletin describe procedures for reporting compliance with the service bulletin. This proposed AD would not require that action.

Costs of Compliance

This proposed AD would affect about 57 airplanes of U.S. registry. The proposed actions would take about 36 work hours per airplane, at an average labor rate of $65 per work hour. Required parts would cost about $2,500 per airplane. Based on these figures, the estimated cost of the proposed AD for U.S. operators is $275,880, or $4,840 per airplane.

Authority for this Rulemaking

The FAA's authority to issue rules regarding aviation safety is found in Title 49 of the United States Code. Subtitle I, Section 106 describes the authority of the FAA Administrator. Subtitle VII, Aviation Programs, describes in more detail the scope of the agency's authority.

This rulemaking is promulgated under the authority described in Subtitle VII, Part A, Subpart III, Section 44701, ''General requirements.'' Under that section, the FAA is charged with promoting safe flight of civil aircraft in air commerce by prescribing regulations for practices, methods, and procedures the Administrator finds necessary for safety in air commerce. This regulation is within the scope of that authority because it addresses an unsafe condition that is likely to exist or develop on products identified in this AD.

Regulatory Findings

We have determined that this proposed AD would not have federalism implications under Executive Order 13132. This proposed AD would not have a substantial direct effect on the States, on the relationship between the national Government and the States, or on the distribution of power and responsibilities among the various levels of government.

For the reasons discussed above, I certify that the proposed regulation:

1. Is not a ''significant regulatory action'' under Executive Order 12866;
2. Is not a ''significant rule'' under the DOT Regulatory Policies and Procedures (44 FR 11034, February 26, 1979); and
3. Will not have a significant economic impact, positive or negative, on a substantial number of small entities under the criteria of the Regulatory Flexibility Act.

We prepared a regulatory evaluation of the estimated costs to comply with this proposed AD. See the **ADDRESSES** section for a location to examine the regulatory evaluation.

List of Subjects in 14 CFR Part 39

Air transportation, Aircraft, Aviation safety, Safety.

The Proposed Amendment

Accordingly, under the authority delegated to me by the Administrator, the FAA proposes to amend 14 CFR part 39 as follows:

PART 39—AIRWORTHINESS DIRECTIVES

1. The authority citation for part 39 continues to read as follows:

Authority: 49 U.S.C. 106(g), 40113, 44701.

§ 39.13 [Amended]

2. The FAA amends § 39.13 by adding the following new airworthiness directive (AD):

BAE Systems (Operations) Limited (Formerly British Aerospace Regional Aircraft): Docket No. FAA–2004–19766; Directorate Identifier 2002–NM–161–AD.

Comments Due Date

(a) The Federal Aviation Administration must receive comments on this AD action by January 7, 2005.

Affected ADs

(b) None.

Applicability

(c) This AD applies to all BAE Systems (Operations) Limited (Jetstream) Model 4101 airplanes, certificated in any category.

Unsafe Condition

(d) This AD was prompted by a report that the aileron trim cables can be connected

incorrectly on a correctly installed aileron trim chain. We are issuing this AD to prevent incorrect connection of the aileron trim cables, which could result in failure of the aileron trim system and consequent reduced controllability of the airplane.

Compliance

(e) You are responsible for having the actions required by this AD performed within the compliance times specified, unless the actions have already been done.

Replacement of Aileron Trim Chain and Modification of Installation

(f) Within 30 months after the effective date of this AD: Replace the aileron trim chain, part number (P/N) 14127003–401, with a new, improved aileron trim chain, P/N 14127003–403; and modify the installation of the aileron trim chain; according to the Accomplishment Instructions of BAE Systems (Operations) Limited Service Bulletin J41–27–061, Revision 1, dated July 12, 2002.

Actions Accomplished According to Previous Issue of Service Bulletin

(g) Replacements and modifications accomplished before the effective date of this AD according to of BAE Systems (Operations) Limited Service Bulletin J41–27–061, dated November 7, 2001, are considered acceptable for compliance with the corresponding actions specified in this AD.

No Reporting Requirement

(h) Although the service bulletin referenced in this AD specifies to report compliance information to the manufacturer, this AD does not include that requirement.

Alternative Methods of Compliance (AMOCs)

(i) The Manager, International Branch, ANM–116, Transport Airplane Directorate, FAA, has the authority to approve AMOCs for this AD, if requested in accordance with the procedures found in 14 CFR 39.19.

Related Information

(j) British airworthiness directive 006–11–2001 also addresses the subject of this AD.

Issued in Renton, Washington, on November 30, 2004.

Ali Bahrami,

Manager, Transport Airplane Directorate, Aircraft Certification Service.

[FR Doc. 04–26919 Filed 12–7–04; 8:45 am]

BILLING CODE 4910–13–P

DEPARTMENT OF AGRICULTURE

Forest Service

36 CFR Part 242

DEPARTMENT OF THE INTERIOR

Fish and Wildlife Service

50 CFR Part 100

RIN 1018–AT81

Subsistence Management Regulations for Public Lands in Alaska

AGENCIES: Forest Service, Agriculture; Fish and Wildlife Service, Interior.

ACTION: Proposed rule.

SUMMARY: This proposed rule would revise and clarify the jurisdiction of the Federal Subsistence Management Program in coastal areas in southwestern Alaska. This rulemaking is necessary in order to exclude numerous saltwater embayments within National Wildlife Refuge boundaries that were not withdrawn prior to Statehood, were never intended to fall under the subsistence management jurisdiction, but have been unintentionally included within the Subsistence Management Program jurisdiction.

DATES: We must receive your written public comments on this proposed rule no later than January 24, 2005.

ADDRESSES: Please submit comments electronically to *Subsistence@fws.gov. See* **SUPPLEMENTARY INFORMATION** for file formats and other information about electronic filing. You may also submit written comments to the Office of Subsistence Management, 3601 C Street, Suite 1030, Anchorage, Alaska 99503.

FOR FURTHER INFORMATION CONTACT: Chair, Federal Subsistence Board, c/o U.S. Fish and Wildlife Service, Attention: Thomas H. Boyd, Office of Subsistence Management; (907) 786–3888. For questions specific to National Forest System lands, contact Steve Kessler, Regional Subsistence Program Leader, USDA, Forest Service, Alaska Region, (907) 786–3888.

SUPPLEMENTARY INFORMATION: Electronic filing of comments (preferred method): Please submit electronic comments (proposals) and other data to *Subsistence@fws.gov.* Please submit as either WordPerfect or MS Word files, avoiding the use of any special characters and any form of encryption.

The Federal Subsistence Board will hold a public meeting in Anchorage, Alaska, within the comment period to receive comments on this proposed rule. Widespread notice will be made of this meeting in the Statewide newspapers and by general news release.

Background

In Title VIII of the Alaska National Interest Lands Conservation Act (ANILCA) (16 U.S.C. 3111–3126), Congress found that ''the situation in Alaska is unique in that, in most cases, no practical alternative means are available to replace the food supplies and other items gathered from fish and wildlife which supply rural residents dependent on subsistence uses * * *'' and that ''continuation of the opportunity for subsistence uses of resources on public and other lands in Alaska is threatened * * *'' As a result, Title VIII requires, among other things, that the Secretary of the Interior and the Secretary of Agriculture (Secretaries) implement a joint program to grant a preference for subsistence uses of fish and wildlife resources on public lands in Alaska, unless the State of Alaska enacts and implements laws of general applicability that are consistent with ANILCA and that provide for the subsistence definition, preference, and participation specified in Sections 803, 804, and 805 of ANILCA.

The State implemented a program that the Department of the Interior previously found to be consistent with ANILCA. However, in December 1989, the Alaska Supreme Court ruled in *McDowell* v. *State of Alaska* that the rural preference in the State subsistence statute violated the Alaska Constitution. The Court's ruling in *McDowell* required the State to delete the rural preference from the subsistence statute and, therefore, negated State compliance with ANILCA. The Court stayed the effect of the decision until July 1, 1990. As a result of the *McDowell* decision, the Department of the Interior and the Department of Agriculture (Departments) assumed, on July 1, 1990, responsibility for implementation of Title VIII of ANILCA on public lands. On June 29, 1990, the Departments published the Temporary Subsistence Management Regulations for Public Lands in Alaska in the **Federal Register** (55 FR 27114).

As a result of this joint process between Interior and Agriculture, these regulations can be found in the Code of Federal Regulations (CFR) both in Title 36, ''Parks, Forests, and Public Property,'' and Title 50, ''Wildlife and Fisheries,'' at 36 CFR 242.1–242.28 and 50 CFR 100.1–100.28, respectively. The regulations contain subparts as follows: Subpart A, General Provisions; Subpart B, Program Structure; Subpart C, Board

Determinations; and Subpart D, Subsistence Taking of Fish and Wildlife.

Consistent with Subparts A, B, and C of these regulations, as revised May 7, 2002 (67 FR 30559), the Departments established a Federal Subsistence Board to administer the Federal Subsistence Management Program. The Board's composition includes a Chair appointed by the Secretary of the Interior with concurrence of the Secretary of Agriculture; the Alaska Regional Director, U.S. Fish and Wildlife Service; the Alaska Regional Director, U.S. National Park Service; the Alaska State Director, U.S. Bureau of Land Management; the Alaska Regional Director, U.S. Bureau of Indian Affairs; and the Alaska Regional Forester, USDA Forest Service. Through the Board, these agencies participated in the development of regulations for Subparts A, B, and C, and the annual Subpart D regulations.

Jurisdictional Perspective

Federal Subsistence Management Regulations (50 CFR 100.3 and 36 CFR 242.3) currently specify that they apply on ''all navigable and non-navigable waters within the exterior boundaries...'' of the parks, refuges, forests, conservation areas, recreation areas, and Wild and Scenic Rivers. This includes hundreds of thousands of acres of saltwater embayments within National Wildlife Refuge boundaries that were not withdrawn prior to Statehood where the Secretaries have unintentionally exerted jurisdiction. We have concluded that our regulations (50 CFR 100.3 and 36 CFR 242.3) are in error as they relate to some bays associated with certain Refuges in Western Alaska. Therefore, we believe it is appropriate to correct the Federal Subsistence Management Regulations for Public Lands in Alaska to accurately reflect the intended jurisdiction in those areas.

During the early interagency discussions relative to inclusion of fisheries management in the Federal Subsistence Management Program, there does not appear to have been any intention to specifically extend Federal jurisdiction to various embayments where there was no pre-Statehood withdrawal of submerged lands and waters. The preambles of the Advance Notice of Proposed Rulemaking (61FR 15014, April 4, 1996) and the Proposed Rule (62 FR 66215, December 17, 1997) refer only to jurisdiction problems along rivers, not in marine areas.

Prior to 1999, the Federal Subsistence Management Program clearly and specifically identified the waters under its jurisdiction in the 1992 rule that set out the structure of the Federal Program (57 FR 22940, May 29, 1992). The various embayments under discussion were not included in that 1992 rule. The Ninth Circuit Court decision in *Alaska* v. *Babbitt,* 72.3d 698 (1995) (the Katie John decision), expanded Federal subsistence management to those navigable waters where the Federal Government holds reserved water rights. As work began to identify these waters, discussion centered on the problem of ''checkerboard jurisdiction'' as it occurred on rivers within Conservation System Units. Federal officials recognized that meaningful management of a subsistence priority could not be accomplished unless there was a more unified area of jurisdiction within Federal conservation system units and other Federal areas. As a result, wording was adopted that extended Federal jurisdiction over subsistence fisheries to ''all navigable and non-navigable waters within the exterior boundaries * * *'' This wording created some unforeseen consequences.

Additionally, ANILCA Section 103 is very specific that in coastal areas, boundaries for new additions to Federal reservations shall not extend seaward beyond the mean high-tide line unless the State concurs. The regulations published in compliance with that section delineating the National Wildlife Refuge boundaries (48 FR 7890, February 24, 1983) specify that Federal ownership does not extend below mean high tide except where the State may agree to that extension. Even though maps show hundreds of thousands of acres of marine waters (exclusive of pre-Statehood withdrawals) within the exterior boundaries of refuges, the Fish and Wildlife Service has never attempted nor intended to exercise any jurisdiction within those areas. Reworded Federal Subsistence Management Regulations would bring consistency among these documents.

A further point of conflict arises over the identification of the boundary of the Alaska Maritime National Wildlife Refuge (and, therefore, the waters within that boundary.) One interpretation of the Refuge maps and BLM Master Title Plats is that there is a landward boundary of the Alaska Maritime NWR identified and that the seaward boundary is located at the boundary of territorial waters. If this interpretation is correct, then the Federal Subsistence Management Program would have subsistence fisheries jurisdiction over most of the marine waters in the State of Alaska. This was clearly not the intent when including all waters within the exterior boundaries.

Additionally, in the final Issue Paper and Recommendations of the Alaska [Katie John] Policy Group (attachment to Acting Regional Solicitor Dennis Hopewell's memorandum of June 15, 1995, as amended July 12, 1995), he stated that:

> Where a federal reservation with reserved water rights includes rivers or streams flowing into marine waters, reserved water rights will apply to all waters above the mouth of said rivers or streams, when the mouth is within the exterior boundaries of the federal reservation. The mouth is defined by a line drawn between the termini of the headlands on either bank of the river. * * *
>
> There are apparently no cases in which the federal government has asserted reservation of rights to marine waters under the Winters doctrine. * * *
>
> Extending the Winters doctrine assertion of reserved water rights to marine waters would be without precedent and would represent a considerable leap in reasoning. * * * Potential appropriation of such waters remains implausible to any degree that could substantially affect marine water quantity or levels at all but the most restricted of locations (such as some salt chucks).* * * [T]he rationale behind the federal reserved waters doctrine would not apply to these marine waters. From this standpoint, it would be difficult to establish a need to reserve water in marine waters in order to accomplish the purposes of a reservation, even such a reserve as the Alaska Maritime National Wildlife Refuge that specifically includes the ''adjacent seas.''

He made the following recommendations:

> Where a federal reservation with reserved water rights includes rivers or streams flowing into marine waters, reserved water rights will be asserted to the mouths of those rivers or streams, where the mouths are within the exterior boundaries of the reservation.
>
> Reserved water rights will not be asserted in marine waters except to the extent that the United States has already taken the position that submerged lands underlying marine waters reserved to the United States at the time of Alaska statehood meet the ANILCA definition of public lands.

In order to correct any misconceptions regarding Secretarial intent; to create consistency among Solicitor opinions, subsistence regulations, and boundary regulations; and to avoid unnecessary complications and public confusion, we are proposing the amendments contained herein. The proposed § __.3(b) includes those areas (Alaska Maritime and Yukon Delta) where marine waters are included, and the regulations apply to both navigable and non-navigable waters. These are the refuge areas where pre-Statehood withdrawals exist. The proposed § __.3(c) includes those areas where marine waters are not included, but the regulations still apply to both navigable

and non-navigable waters. The proposed § __.3(d) includes those areas where the regulations apply only to non-navigable waters. These are the unassociated BLM lands that are not a part of a conservation system unit and have not been withdrawn from the public domain for specific purposes. Also, the addition of the text ''other than military lands'' is a clarification, inasmuch as the military lands have never been included in the Federal Subsistence Management Program because of national security and defense reasons and because they are not considered ''public'' lands.

Because this rule relates to public lands managed by an agency or agencies in both the Departments of Agriculture and the Interior, identical text would be incorporated into 36 CFR part 242 and 50 CFR part 100.

Conformance With Statutory and Regulatory Authorities

National Environmental Policy Act Compliance

A Draft Environmental Impact Statement (DEIS) for developing a Federal Subsistence Management Program was distributed for public comment on October 7, 1991. That document described the major issues associated with Federal subsistence management as identified through public meetings, written comments, and staff analysis, and examined the environmental consequences of four alternatives. Proposed regulations (Subparts A, B, and C) that would implement the preferred alternative were included in the DEIS as an appendix. The DEIS and the proposed administrative regulations presented a framework for an annual regulatory cycle regarding subsistence hunting and fishing regulations (Subpart D). The Final Environmental Impact Statement (FEIS) was published on February 28, 1992.

Based on the public comments received, the analysis contained in the FEIS, and the recommendations of the Federal Subsistence Board and the Department of the Interior's Subsistence Policy Group, the Secretary of the Interior, with the concurrence of the Secretary of Agriculture, through the U.S. Department of Agriculture—Forest Service, implemented Alternative IV as identified in the DEIS and FEIS (Record of Decision on Subsistence Management for Federal Public Lands in Alaska (ROD), signed April 6, 1992). The DEIS and the selected alternative in the FEIS defined the administrative framework of an annual regulatory cycle for subsistence hunting and fishing regulations. The final rule for Subsistence Management Regulations for Public Lands in Alaska, Subparts A, B, and C, published May 29, 1992, implemented the Federal Subsistence Management Program and included a framework for an annual cycle for subsistence hunting and fishing regulations. The following **Federal Register** documents pertain to this rulemaking:

FEDERAL REGISTER DOCUMENTS PERTAINING TO SUBSISTENCE MANAGEMENT REGULATIONS FOR PUBLIC LANDS IN ALASKA, SUBPARTS A AND B

Federal Register citation	Date of publication	Category	Details
57 FR 22940	May 29, 1992	Final Rule	''Subsistence Management Regulations for Public Lands in Alaska; Final Rule'' was published in the **Federal Register.**
64 FR 1276	January 8, 1999	Final Rule (amended)	Amended to include subsistence activities occurring on inland navigable waters in which the United States has a reserved water right and to identify specific Federal land units where reserved water rights exist. Extended the Federal Subsistence Board's management to all Federal lands selected under the Alaska Native Claims Settlement Act and the Alaska Statehood Act and situated within the boundaries of a Conservation System Unit, National Recreation Area, National Conservation Area, or any new national forest or forest addition, until conveyed to the State of Alaska or an Alaska Native Corporation. Specified and clarified Secretaries' authority to determine when hunting, fishing, or trapping activities taking place in Alaska off the public lands interfere with the subsistence priority.
66 FR 31533	June 12, 2001	Interim Rule	Expanded the authority that the Board may delegate to agency field officials and clarified the procedures for enacting emergency or temporary restrictions, closures, or openings.
67 FR 30559	May 7, 2002	Final Rule	In response to comments on an interim rule, amended the operating regulations. Also corrected some inadvertent errors and oversights of previous rules.
68 FR 7703	February 18, 2003	Direct Final Rule	This rule clarified how old a person must be to receive certain subsistence use permits and removed the requirement that Regional Councils must have an odd number of members.
68 FR 23035	April 30, 2003	Affirmation of Direct Final Rule	Received no adverse comments on the direct final rule (68 FR 7703). Adopted direct final rule.

An environmental assessment was prepared in 1997 on the expansion of Federal jurisdiction over fisheries and is available by contacting the office listed under **FOR FURTHER INFORMATION CONTACT.** The Secretary of the Interior with the concurrence of the Secretary of Agriculture determined that the expansion of Federal jurisdiction did not constitute a major Federal action significantly affecting the human environment, and therefore, signed a Finding of No Significant Impact.

Compliance With Section 810 of ANILCA

The intent of all Federal subsistence regulations is to accord subsistence uses of fish and wildlife on public lands a priority over the taking of fish and wildlife on such lands for other purposes, unless restriction is necessary to conserve healthy fish and wildlife populations. A Section 810 analysis was completed as part of the FEIS process. The final Section 810 analysis determination appeared in the April 6, 1992, ROD, which concluded that the Federal Subsistence Management Program may have some local impacts

on subsistence uses, but the program is not likely to significantly restrict subsistence uses.

Paperwork Reduction Act

These rules contain no new information collection requirements subject to Office of Management and Budget (OMB) approval under the Paperwork Reduction Act of 1995. They apply to the use of public lands in Alaska. The information collection requirements described in the rule were approved by OMB under 44 U.S.C. 3501 and were assigned clearance number 1018–0075, which expires August 31, 2006. We will not conduct or sponsor, and you are not required to respond to, a collection of information request unless it displays a currently valid OMB control number.

Other Requirements

Economic Effects—This rule is not a significant rule subject to OMB review under Executive Order 12866. This rulemaking will impose no significant costs on small entities; this rule does not restrict any existing sport or commercial fishery on the public lands, and subsistence fisheries will continue at essentially the same levels as they presently occur. The number of businesses and the amount of trade that will result from this Federal-land related activity is unknown but expected to be insignificant.

The Regulatory Flexibility Act of 1980 (5 U.S.C. 601 *et seq.*) requires preparation of regulatory flexibility analyses for rules that will have a significant economic effect on a substantial number of small entities, which include small businesses, organizations, or governmental jurisdictions. The Departments have determined that this rulemaking will not have a significant economic effect on a substantial number of small entities within the meaning of the Regulatory Flexibility Act.

This rulemaking will impose no significant costs on small entities; the exact number of businesses and the amount of trade that will result from this Federal-land related activity is unknown. The number of small entities affected is unknown; however, the fact that the effects will be seasonal in nature and will, in most cases, not impact continuing preexisting uses of public lands indicates that the effects will not be significant.

Title VIII of ANILCA requires the Secretaries to administer a subsistence preference on public lands. The scope of this program is limited by definition to certain public lands. Likewise, these regulations have no potential takings of private property implications as defined by Executive Order 12630.

The Service has determined and certifies pursuant to the Unfunded Mandates Reform Act, 2 U.S.C. 1502 *et seq.*, that this rulemaking will not impose a cost of $100 million or more in any given year on local or State governments or private entities. The implementation of this rule is by Federal agencies, and no cost is involved to any State or local entities or Tribal governments.

The Service has determined that these final regulations meet the applicable standards provided in Sections 3(a) and 3(b)(2) of Executive Order 12988 on Civil Justice Reform.

In accordance with Executive Order 13132, the rule does not have sufficient federalism implications to warrant the preparation of a Federalism Assessment. Title VIII of ANILCA precludes the State from exercising management authority over wildlife resources on Federal lands.

In accordance with the President's memorandum of April 29, 1994, ''Government-to-Government Relations with Native American Tribal Governments'' (59 FR 22951), 512 DM 2, and E.O. 13175, we have evaluated possible effects on Federally recognized Indian tribes and have determined that there are no effects. The Bureau of Indian Affairs is a participating agency in this rulemaking.

On May 18, 2001, the President issued Executive Order 13211 on regulations that significantly affect energy supply, distribution, or use. This Executive Order requires agencies to prepare Statements of Energy Effects when undertaking certain actions. As this rule is not a significant regulatory action under Executive Order 13211, affecting energy supply, distribution, or use, this action is not a significant action and no Statement of Energy Effects is required.

William Knauer drafted these regulations under the guidance of Thomas H. Boyd of the Office of Subsistence Management, Alaska Regional Office, U.S. Fish and Wildlife Service, Anchorage, Alaska. Taylor Brelsford, Alaska State Office, Bureau of Land Management; Greg Bos, Carl Jack, and Rod Simmons, Alaska Regional Office, U.S. Fish and Wildlife Service; Sandy Rabinowitch and Bob Gerhard, Alaska Regional Office, National Park Service; Warren Eastland and Dr. Glenn Chen, Alaska Regional Office, Bureau of Indian Affairs; and Steve Kessler, Alaska Regional Office, USDA-Forest Service provided additional guidance.

List of Subjects

36 CFR Part 242

Administrative practice and procedure, Alaska, Fish, National forests, Public lands, Reporting and recordkeeping requirements, Wildlife.

50 CFR Part 100

Administrative practice and procedure, Alaska, Fish, National forests, Public lands, Reporting and recordkeeping requirements, Wildlife.

For the reasons set out in the preamble, the Secretaries propose to amend Title 36, part 242, and Title 50, part 100, of the Code of Federal Regulations, as set forth below.

PART—SUBSISTENCE MANAGEMENT REGULATIONS FOR PUBLIC LANDS IN ALASKA

1. The authority citation for both 36 CFR part 242 and 50 CFR part 100 would continue to read as follows:

Authority: 16 U.S.C. 3, 472, 551, 668dd, 3101–3126; 18 U.S.C. 3551–3586; 43 U.S.C. 1733.

Subpart A—General Provisions

2. In Subpart A of 36 CFR part 242 and 50 CFR part 100, § __.3 would be revised to read as follows:

§ ____.3 Applicability and scope.

(a) The regulations in this part implement the provisions of Title VIII of ANILCA relevant to the taking of fish and wildlife on public lands in the State of Alaska. The regulations in this part do not permit subsistence uses in Glacier Bay National Park, Kenai Fjords National Park, Katmai National Park, and that portion of Denali National Park established as Mt. McKinley National Park prior to passage of ANILCA, where subsistence taking and uses are prohibited. The regulations in this part do not supersede agency-specific regulations.

(b) The regulations contained in this part apply on all public lands, including all inland waters, both navigable and non-navigable, within and adjacent to the exterior boundaries of the following areas, and on the marine waters as identified in the following areas:

(1) Alaska Maritime National Wildlife Refuge, including the:

(i) Karluk Subunit: all of the submerged land and water of the Pacific Ocean (Shelikof Strait) extending 3,000 feet from the shoreline between a point on the spit at the meander corner common to Sections 35 and 36 of Township 30 South, Range 33 West, and a point approximately 1¼ miles east of Rocky Point within Section 14 of

Township 29 South, Range 31 West, Seward Meridian as described in Public Land Order 128, dated June 19, 1943;

(ii) Womens Bay Subunit: Womens Bay, Gibson Cove, portions of St. Paul Harbor and Chiniak Bay: all of the submerged land and water as described in Public Land Order 1182, dated July 7, 1955 (U.S. Survey 2539);

(iii) Afognak Island Subunit: all submerged lands and waters of the Pacific Ocean lying within 3 miles of the shoreline as described in Proclamation No. 39, dated December 24, 1892;

(iv) Simeonof Subunit: all of the submerged land and water of Simeonof Island together with the adjacent waters of the Pacific Ocean extending 1 mile from the shore line as described in Public Land Order 1749, dated October 30, 1958; and

(v) Semidi Subunit: all of the submerged land and water of the Semidi Islands together with the adjacent waters of the Pacific Ocean lying between parallels 55E57′00″–56E15′00″ North Latitude and 156E30′00″–157E00′00″ West Longitude as described in Executive Order 5858, dated June 17, 1932;

(2) Arctic National Wildlife Refuge, including those waters shoreward of the line of extreme low water starting in the vicinity of Monument 1 at the intersection of the International Boundary line between the State of Alaska and the Yukon Territory, Canada, and extending westerly, along the line of extreme low water across the entrances of lagoons such that all offshore bars, reefs and islands, and lagoons that separate them from the mainland to Brownlow Point, at approximately 70E10′ North Latitude and 145E51′ West Longitude;

(3) National Petroleum Reserve in Alaska, including those waters shoreward of a line beginning at the western bank of the Colville River following the highest highwater mark westerly, extending across the entrances of small lagoons, including Pearl Bay, Wainwright Inlet, the Kuk River, Kugrua Bay and River, and other small bays and river estuaries, and following the ocean side of barrier islands and sandspits within three miles of shore and the ocean side of the Plover Islands, to the northwestern extremity of Icy Cape, at approximately 70E21′ North Latitude and 161E46′ West Longitude; and

(4) Yukon Delta National Wildlife Refuge, including Nunivak Island: the submerged land and water of Nunivak Island together with the adjacent waters of the Bering Sea extending, for Federal Subsistence Management purposes, 3 miles from the shoreline as described in Executive Order No. 5059, dated April 15, 1929.

(c) The regulations contained in this part apply on all public lands, excluding marine waters, but including all inland waters, both navigable and non-navigable, within and adjacent to the exterior boundaries of the following areas:

(1) Alaska Peninsula National Wildlife Refuge;
(2) Aniakchak National Monument and Preserve;
(3) Becharof National Wildlife Refuge;
(4) Bering Land Bridge National Preserve;
(5) Cape Krusenstern National Monument;
(6) Chugach National Forest;
(7) Denali National Preserve and the 1980 additions to Denali National Park;
(8) Gates of the Arctic National Park and Preserve;
(9) Glacier Bay National Preserve;
(10) Innoko National Wildlife Refuge;
(11) Izembek National Wildlife Refuge;
(12) Kanuti National Wildlife Refuge;
(13) Katmai National Preserve;
(14) Kenai National Wildlife Refuge;
(15) Kobuk Valley National Park;
(16) Kodiak National Wildlife Refuge;
(17) Koyukuk National Wildlife Refuge;
(18) Lake Clark National Park and Preserve;
(19) Noatak National Preserve;
(20) Nowitna National Wildlife Refuge;
(21) Selawik National Wildlife Refuge;
(22) Steese National Conservation Area;
(23) Tetlin National Wildlife Refuge;
(24) Togiak National Wildlife Refuge;
(25) Tongass National Forest, including Admiralty Island National Monument and Misty Fjords National Monument;
(26) White Mountain National Recreation Area;
(27) Wrangell-St. Elias National Park and Preserve;
(28) Yukon-Charley Rivers National Preserve;
(29) Yukon Flats National Wildlife Refuge;
(30) All components of the Wild and Scenic River System located outside the boundaries of National Parks, National Preserves, or National Wildlife Refuges, including segments of the Alagnak River, Beaver Creek, Birch Creek, Delta River, Fortymile River, Gulkana River, and Unalakleet River.

(d) The regulations contained in this part apply on all other public lands, other than military lands, including all non-navigable waters located on these lands.

(e) The public lands described in paragraph (b) of this section remain subject to change through rulemaking pending a Department of the Interior review of title and jurisdictional issues regarding certain submerged lands beneath navigable waters in Alaska.

3. In Subpart A of 36 CFR part 242 and 50 CFR part 100, § __.4c revise the definitions of ''Inland Waters'' and ''Marine Waters'' to read as follows:

§ __.4 Definitions.

* * * * *

Inland Waters means, for the purposes of this part, those waters located landward of the mean high-tide line and the waters located upstream of the straight line drawn from headland to headland across the mouths of rivers, creeks, or streams. Inland waters include lakes, reservoirs, ponds, creeks, streams, rivers, and other fresh and brackish water bodies.

Marine Waters means, those waters located seaward of the mean high-tide line or, with regard to rivers, creeks, streams and other inland waters, seaward of a straight line drawn from headland to headland at the mouth of such waters.

* * * * *

Dated: November 3, 2004.

Gale A. Norton,

Secretary of the Interior, Department of the Interior.

Dated: November 22, 2004.

Dennis E. Bschor,

Regional Forester, USDA-Forest Service.

[FR Doc. 04–26789 Filed 12–7–04; 8:45 am]

BILLING CODE 3410–11–P; 4310–55–P

ENVIRONMENTAL PROTECTION AGENCY

40 CFR Part 52

[R03–OAR–2004–PA–0003; FRL–7845–2]

Approval and Promulgation of Air Quality Implementation Plans; Pennsylvania; VOC Requirements for Portable Fuel Containers

AGENCY: Environmental Protection Agency (EPA).

ACTION: Proposed rule.

SUMMARY: EPA proposes to approve the State Implementation Plan (SIP) revision submitted by the Commonwealth of Pennsylvania for the purpose of establishing the volatile organic compound (VOC) control requirements for portable fuel containers. In the Final Rules section of this **Federal Register**, EPA is approving the Commonwealth's SIP submittal as a direct final rule without prior proposal because the Agency views this as a

noncontroversial submittal and anticipates no adverse comments. A detailed rationale for the approval is set forth in the direct final rule. If no adverse comments are received in response to this action, no further activity is contemplated. If EPA receives adverse comments, the direct final rule will be withdrawn and all public comments received will be addressed in a subsequent final rule based on this proposed rule. EPA will not institute a second comment period. Any parties interested in commenting on this action should do so at this time.

DATES: Comments must be received in writing by January 7, 2005.

ADDRESSES: Submit your comments, identified by Regional Material in EDocket (RME) ID Number R03–OAR–2004–PA–0003 by one of the following methods:

A. Federal eRulemaking Portal: *http://www.regulations.gov.* Follow the on-line instructions for submitting comments.

B. Agency Web site: *http://www.docket.epa.gov/rmepub/* RME, EPA's electronic public docket and comment system, is EPA's preferred method for receiving comments. Follow the on-line instructions for submitting comments.

C. E-mail: *morris.makeba@epa.gov.*

D. Mail: R03–OAR–2004–PA–0003, Makeba Morris, Chief, Air Quality Planning Branch, Mailcode 3AP21, U.S. Environmental Protection Agency, Region III, 1650 Arch Street, Philadelphia, Pennsylvania 19103.

E. Hand Delivery: At the previously-listed EPA Region III address. Such deliveries are only accepted during the Docket's normal hours of operation, and special arrangements should be made for deliveries of boxed information.

Instructions: Direct your comments to RME ID No. R03–OAR–2004–PA–0003. EPA's policy is that all comments received will be included in the public docket without change, and may be made available online at *http://www.docket.epa.gov/rmepub/,* including any personal information provided, unless the comment includes information claimed to be Confidential Business Information (CBI) or other information whose disclosure is restricted by statute. Do not submit information that you consider to be CBI or otherwise protected through RME, regulations.gov or e-mail. The EPA RME and the Federal regulations.gov Web sites are an ''anonymous access'' system, which means EPA will not know your identity or contact information unless you provide it in the body of your comment. If you send an e-mail comment directly to EPA without going through RME or regulations.gov, your e-mail address will be automatically captured and included as part of the comment that is placed in the public docket and made available on the Internet. If you submit an electronic comment, EPA recommends that you include your name and other contact information in the body of your comment and with any disk or CD–ROM you submit. If EPA cannot read your comment due to technical difficulties and cannot contact you for clarification, EPA may not be able to consider your comment. Electronic files should avoid the use of special characters, any form of encryption, and be free of any defects or viruses.

Docket: All documents in the electronic docket are listed in the RME index at *http://www.docket.epa.gov/rmepub/.* Although listed in the index, some information is not publicly available, *i.e.*, CBI or other information whose disclosure is restricted by statute. Certain other material, such as copyrighted material, is not placed on the Internet and will be publicly available only in hard copy form. Publicly available docket materials are available either electronically in RME or in hard copy during normal business hours at the Air Protection Division, U.S. Environmental Protection Agency, Region III, 1650 Arch Street, Philadelphia, Pennsylvania 19103. Copies of the State submittal are available at the Pennsylvania Department of Environmental Resources Bureau of Air Quality Control, P.O. Box 8468, 400 Market Street, Harrisburg, Pennsylvania 17105.

FOR FURTHER INFORMATION CONTACT: Cristina Fernandez, (215) 814–2178, or by e-mail at *fernandez.cristina@epa.gov.*

SUPPLEMENTARY INFORMATION: For further information, please see the information provided in the direct final action, with the same title, that is located in the ''Rules and Regulations'' section of this **Federal Register** publication.

Dated: November 24, 2004.

Donald S. Welsh,

Regional Administrator, Region III.

[FR Doc. 04–26942 Filed 12–7–04; 8:45 am]

BILLING CODE 6560–50–P

ENVIRONMENTAL PROTECTION AGENCY

40 CFR Part 52

[R03–OAR–2004–PA–0004; FRL–7844–9]

Approval and Promulgation of Air Quality Implementation Plans; Pennsylvania; VOC Requirements for Consumer Products

AGENCY: Environmental Protection Agency (EPA).

ACTION: Proposed rule.

SUMMARY: EPA proposes to approve the State Implementation Plan (SIP) revision submitted by the Commonwealth of Pennsylvania for the purpose of establishing volatile organic compound (VOC) control requirements for consumer products. In the Final Rules section of this **Federal Register**, EPA is approving the Commonwealth's SIP submittal as a direct final rule without prior proposal because the Agency views this as a noncontroversial submittal and anticipates no adverse comments. A detailed rationale for the approval is set forth in the direct final rule. If no adverse comments are received in response to this action, no further activity is contemplated. If EPA receives adverse comments, the direct final rule will be withdrawn and all public comments received will be addressed in a subsequent final rule based on this proposed rule. EPA will not institute a second comment period. Any parties interested in commenting on this action should do so at this time.

DATES: Comments must be received in writing by January 7, 2005.

ADDRESSES: Submit your comments, identified by Regional Material in EDocket (RME) ID Number R03–OAR–2004–PA–0004 by one of the following methods:

A. Federal eRulemaking Portal: *http://www.regulations.gov.* Follow the on-line instructions for submitting comments.

B. Agency Web site: *http://www.docket.epa.gov/rmepub/* RME, EPA's electronic public docket and comment system, is EPA's preferred method for receiving comments. Follow the on-line instructions for submitting comments.

C. E-mail: *morris.makeba@epa.gov.*

D. Mail: R03–OAR–2004–PA–0004, Makeba Morris, Chief, Air Quality Planning Branch, Mailcode 3AP21, U.S. Environmental Protection Agency, Region III, 1650 Arch Street, Philadelphia, Pennsylvania 19103.

E. Hand Delivery: At the previously-listed EPA Region III address. Such

deliveries are only accepted during the Docket's normal hours of operation, and special arrangements should be made for deliveries of boxed information.

Instructions: Direct your comments to RME ID No. R03–OAR–2004–PA–0004. EPA's policy is that all comments received will be included in the public docket without change, and may be made available online at *http://www.docket.epa.gov/rmepub/,* including any personal information provided, unless the comment includes information claimed to be Confidential Business Information (CBI) or other information whose disclosure is restricted by statute. Do not submit information that you consider to be CBI or otherwise protected through RME, regulations.gov or e-mail. The EPA RME and the Federal regulations.gov Web sites are an ''anonymous access'' system, which means EPA will not know your identity or contact information unless you provide it in the body of your comment. If you send an e-mail comment directly to EPA without going through RME or regulations.gov, your e-mail address will be automatically captured and included as part of the comment that is placed in the public docket and made available on the Internet. If you submit an electronic comment, EPA recommends that you include your name and other contact information in the body of your comment and with any disk or CD–ROM you submit. If EPA cannot read your comment due to technical difficulties and cannot contact you for clarification, EPA may not be able to consider your comment. Electronic files should avoid the use of special characters, any form of encryption, and be free of any defects or viruses.

Docket: All documents in the electronic docket are listed in the RME index at *http://www.docket.epa.gov/rmepub/.* Although listed in the index, some information is not publicly available, *i.e.*, CBI or other information whose disclosure is restricted by statute. Certain other material, such as copyrighted material, is not placed on the Internet and will be publicly available only in hard copy form. Publicly available docket materials are available either electronically in RME or in hard copy during normal business hours at the Air Protection Division, U.S. Environmental Protection Agency, Region III, 1650 Arch Street, Philadelphia, Pennsylvania 19103. Copies of the State submittal are available at the Pennsylvania Department of Environmental Resources Bureau of Air Quality Control, P.O. Box 8468, 400 Market Street, Harrisburg, Pennsylvania 17105.

FOR FURTHER INFORMATION CONTACT: Cristina Fernandez, (215) 814–2178, or by e-mail at *fernandez.cristina@epa.gov.*

SUPPLEMENTARY INFORMATION: For further information, please see the information provided in the direct final action, with the same title, that is located in the ''Rules and Regulations'' section of this **Federal Register** publication.

Dated: November 24, 2004.

Donald S. Welsh,

Regional Administrator, Region III.

[FR Doc. 04–26940 Filed 12–7–04; 8:45 am]

BILLING CODE 6560–50–P

ENVIRONMENTAL PROTECTION AGENCY

40 CFR Part 271

[FRL–7846–1]

Tennessee: Final Authorization of State Hazardous Waste Management Program Revisions

AGENCY: Environmental Protection Agency (EPA).

ACTION: Proposed rule.

SUMMARY: Tennessee has applied to EPA for Final authorization of the changes to its hazardous waste program under the Resource Conservation and Recovery Act (RCRA). EPA proposes to grant final authorization to Tennessee for RCRA Clusters IX through XII. In the ''Rules and Regulations'' section of this **Federal Register**, EPA is authorizing the changes by an immediate final rule. EPA did not make a proposal prior to the immediate final rule because we believe this action is not controversial and do not expect comments that oppose it. We have explained the reasons for this authorization in the preamble to the immediate final rule. Unless we get written comments which oppose this authorization during the comment period, the immediate final rule will become effective on the date it establishes, and we will not take further action on this proposal. If we get comments that oppose this action, we will withdraw the immediate final rule and it will not take effect. We will then respond to public comments in a later final rule based on this proposal. You may not have another opportunity for comment. If you want to comment on this action, you must do so at this time.

DATES: Send your written comments by January 7, 2005.

ADDRESSES: Submit your comments by one of the following methods:

- Federal eRulemaking Portal: *http://www.regulations.gov.* Follow the on-line instructions for submitting comments.
- E-mail: *gleaton.gwen@epa.gov*
- Fax: (404) 562–8439 (prior to faxing, please notify the EPA contact listed below)
- Mail: Send written comments to Gwen Gleaton at the address listed below.

Instructions: Do not submit information that you consider to be CBI or otherwise protected through *http://www.regulations.gov,* or e-mail. The Federal *regulations.gov* Web site is an ''anonymous access'' system, which means EPA will not know your identity or contact information unless you provide it in the body of your comments. If you submit an electronic comment, EPA recommends that you include your name and other contact information in the body of your comment and with any disk or CD–ROM you submit.

You can view and copy Tennessee's applications from 8 a.m. to 4:30 p.m. at the following addresses: Tennessee Department of Environment and Conservation, Division of Solid Waste Management, 5th Floor, L & C Tower, 401 Church Street, Nashville, Tennessee 37243–1535; and EPA, Region 4, Library, 9th Floor, The Sam Nunn Atlanta Federal Center, 61 Forsyth Street, SW., Atlanta, Georgia 30303–3104; (404) 562–8190.

FOR FURTHER INFORMATION CONTACT: Gwen Gleaton, RCRA Services Section, RCRA Programs Branch, Waste Management Division, U.S. Environmental Protection Agency, Region 4, The Sam Nunn Atlanta Federal Center, 61 Forsyth Street, SW., Atlanta, Georgia 30303–3104; (404) 562–8500.

SUPPLEMENTARY INFORMATION: For additional information, please see the immediate final rule published in the ''Rules and Regulations'' section of this **Federal Register**.

Dated: November 16, 2004.

J.I. Palmer, Jr.,

Regional Administrator, Region 4.

[FR Doc. 04–26944 Filed 12–7–04; 8:45 am]

BILLING CODE 6560–50–P

DEPARTMENT OF TRANSPORTATION

National Highway Traffic Safety Administration

49 CFR Part 572

[Docket No. NHTSA–2004–18865]

RIN 2127–AJ16

Anthropomorphic Test Devices; SID–IIsFRG Side Impact Crash Test Dummy (SID–IIs With Floating Rib Guide Modifications); 5th Percentile Adult Female

AGENCY: National Highway Traffic Safety Administration (NHTSA), Department of Transportation.

ACTION: Notice of proposed rulemaking (NPRM).

SUMMARY: This document proposes specifications and qualification requirements for a 5th percentile adult female test dummy for use in vehicle side impact tests. NHTSA has published an NPRM to amend Federal Motor Vehicle Safety Standard No. 214, ''Side Impact Protection,'' to add a dynamic pole test to the standard. Under that proposal, all passenger vehicles with a gross vehicle weight rating of 4,536 kilograms (10,000 pounds) or less would have to protect front seat occupants against head, thoracic, abdominal and pelvic injuries in a vehicle-to-pole test simulating a vehicle's side impact crash into narrow fixed objects like telephone poles and trees. Two newly developed anthropomorphic test dummies would be used in the pole test: One representing a 5th percentile adult female, and one representing a 50th percentile adult male. Today's document proposes the specifications and qualification requirements for the 5th percentile female dummy. The 5th percentile adult female crash test dummy allows regulators and researchers to assess the actual performance of vehicles in protecting small-stature occupants in side impacts.

DATES: You should submit your comments early enough to ensure that Docket Management receives them not later than March 8, 2005.

ADDRESSES: You may submit comments (identified by the DOT DMS Docket Number) by any of the following methods:

- Web site: *http://dms.dot.gov.* Follow the instructions for submitting comments on the DOT electronic docket site.
- Fax: 1–202–493–2251.
- Mail: Docket Management Facility; U.S. Department of Transportation, 400 Seventh Street, SW., Nassif Building, Room PL–401, Washington, DC 20590–001.

Hand Delivery: Room PL–401 on the plaza level of the Nassif Building, 400 Seventh Street, SW., Washington, DC, between 9 a.m. and 5 p.m., Monday through Friday, except Federal Holidays.

- Federal eRulemaking Portal: Go to *http://www.regulations.gov.* Follow the online instructions for submitting comments.

Instructions: All submissions must include the agency name and docket number or Regulatory Identification Number (RIN) for this rulemaking. For detailed instructions on submitting comments and additional information on the rulemaking process, see the Public Participation heading of the Supplementary Information section of this document. Note that all comments received will be posted without change to *http://dms.dot.gov,* including any personal information provided. Please see the Privacy Act discussion under the Public Participation heading.

Docket: For access to the docket to read background documents or comments received, go to *http://dms.dot.gov* at any time or to Room PL–401 on the plaza level of the Nassif Building, 400 Seventh Street, SW., Washington, DC, between 9 a.m. and 5 p.m., Monday through Friday, except Federal holidays.

FOR FURTHER INFORMATION CONTACT: For non-legal issues, you may call Stan Backaitis, NHTSA Office of Crashworthiness Standards (telephone: (202) 366–4912). For legal issues, you may call Deirdre R. Fujita, NHTSA Office of Chief Counsel ((202) 366–2992). You may send mail to these officials at the National Highway Traffic Safety Administration, 400 Seventh St., SW., Washington, DC, 20590.

SUPPLEMENTARY INFORMATION:

Table of Contents

I. Introduction
II. Background
  a. Need for the Dummy
  b. Development of the FRG
III. Description
IV. Biofidelity
V. Repeatability and Reproducibility
  a. Component Tests
  b. Sled Tests
  1. 6.7 m/s Flat Wall Test Results.
  2. 6.0 m/s Flat Wall Test Results.
  3. Abdominal Offset Tests
VI. Pelvis Plug
VII. Durability
VIII. Reversibility for Right and Left Use
IX. Directional Impact Sensitivity
X. Proposed Calibration Tests
Rulemaking Analyses and Notices
Public Participation

I. Introduction

This document relates to an NPRM previously issued by NHTSA (69 FR 27990, May 17, 2004; Docket 2004–17694) that proposed to add a vehicle-to-pole test to Federal Motor Vehicle Safety Standard (FMVSS) No. 214, ''Side Impact Protection'' (49 CFR 571.214). The pole test simulates a vehicle's side impact crash into narrow fixed objects like telephone poles and trees. If adopted as a final rule, the proposed pole test could result in the installation of dynamically deploying side impact air bag systems and other measures to protect front seat occupants against head, thoracic, abdominal and pelvic injuries in side crashes.

In the proposed pole test, an anthropomorphic test dummy representing a 5th percentile adult female is in the front outboard seat on the struck side of the vehicle. Vehicles would have to be certified as complying with an established head injury criterion and with thoracic and pelvic injury criteria developed for the new dummy. The agency has also proposed to use this dummy in FMVSS No. 214's existing moving deformable barrier (MDB) test, which simulates a moving vehicle-to-vehicle ''T-bone'' type intersection crash. Today's NPRM proposes the specifications and calibration requirements for the 5th percentile adult female test dummy that NHTSA seeks to use in these FMVSS No. 214 crash tests.[1]

The development of a small, second-generation side impact dummy was undertaken in 1993 by the Occupant Safety Research Partnership (OSRP), a consortium of the U.S. Council for Automotive Research (USCAR), and dummy manufacturer First Technology Safety Systems (FTSS). (USCAR was formed in 1992 by DaimlerChrysler, Ford and General Motors, as a research and development organization.) The OSRP determined that there was a need for a test dummy that would be better suited to help evaluate the performance of advanced side impact countermeasures, notably air bags, for occupants that are smaller than the 50th percentile size male. The new dummy was named SID–IIs, indicating ''SID'' as side impact dummy, ''II'' as second generation, and ''s'' as small. The SID–IIs dummy was extensively tested in the late 1990s and early 2000 in vehicle crashes by Transport Canada, and to a limited extent by U.S. automobile

[1] The dummy proposed today represents the lower end of the 5th percentile female population range by mass distribution. However, the erect seated height is nearly at the mid point of that population range.

manufacturers and suppliers, and the Insurance Institute for Highway Safety (IIHS).

The dummy specified in today's document is a modified version of the original SID–IIs dummy. NHTSA's laboratory evaluation of the biofidelity of the SID–IIs revealed chest displacement transducer mechanical failures and some ribcage and shoulder structural problems. Post test evidence showed that the ribs of the unmodified SID–IIs did not remain constrained by the rib guides, which allowed their vertical motion during some impactor and sled tests, which in turn raised concerns regarding the structural integrity of the ribs and the deflection potentiometers, as well as the accuracy of the deflection measurements. The agency's Vehicle Research and Test Center (VRTC) modified the dummy's thorax in 2001 to incorporate floating rib guides to better stabilize the kinematics of the dummy's ribs, and revised the shoulder and its rib guide design to prevent distorting vertical rib motion. The modified dummy proposed today is hereinafter referred to as the ''SID-IIsFRG,'' the ''FRG'' indicating the floating rib guide and other modifications to the dummy.[2]

The SID–IIsFRG has a mass of 44.5 kg (98 pounds) and a seated height of 790 mm (31.1 inches). The dummy is capable of measuring accelerations, deflections and/or forces in the head, thorax, shoulder, abdomen and pelvis body regions. The dummy is described in detail in a NHTSA technical report entitled, ''Summary of the NHTSA Evaluation of the SID–IIsFRG Side Impact Crash Test Dummy Including Assessment of Durability, Biofidelity, Repeatability, Reproducibility and Directional Sensitivity'' (November 2004), and in the PADI document (October 2004), which have been placed in the docket for today's NPRM. (A number of technical reports providing further test details on the dummy, such as its repeatability and reproducibility, have also been placed in docket 17694, *supra.*)

II. Background

a. Need for the Dummy

Data from the 1990–2001 National Automotive Sampling System (NASS) Crashworthiness Data System (CDC) indicate a need for a dummy that has the capability of predicting the risk of injury to a segment of small-statured vehicle occupants in side crashes. Table 1 shows the injury distribution of the estimated target population less than 65 inches (in) in stature in all types of side impact crashes between 12 and 25 mph delta V.

TABLE 1.—U.S. MOTOR VEHICLE SMALL STATURE ADULT OCCUPANT POPULATION INJURY SEVERITY DISTRIBUTION IN SIDE CRASHES

[For delta-V of 12–25 mph]

Body region	MAIS 1	MAIS 2	MAIS 3	MAIS 4	MAIS 5	Fatality	Total
Head and Face	6706	1864	99	142	163	527	9049
Thorax	4377	295	1213	671	11	446	7094
Abdomen	264	86	20	112	27	96	670
Pelvis	0	0	123	0	0	6	136

The 1990–2001 NASS/CDS data also indicate that there are differences in the body region distribution of serious injuries between small and medium stature occupants in these side collisions. The data suggests that small stature occupants have a higher proportion of head, abdominal and pelvic injuries than medium stature occupants, and a lower proportion of chest injuries (Samaha *et al.*, ''NHTSA Side Impact Research: Motivation for Upgraded Test Procedures,'' 18th ESV Conference Proceedings). The agency believes that, in addition to a 50th percentile adult male dummy, use of a small-statured dummy in side impact testing would better represent the population at-risk in side impacts and substantially enhance protection for small adult occupants.

b. Development of the FRG

NHTSA began an extensive evaluation of the SID–IIs in 2000. The biofidelity of the dummy was assessed in component and sled testing that examined the ability of the dummy to load a vehicle as a cadaver does, and to replicate cadaver responses that best predict injury potential. Our finding from the sled tests was that a 8.9 m/s test was too severe to assess the durability and other characteristics of the dummy. Some of the 8.9 m/s tests resulted in damaged ribs, bent potentiometer shafts and crushed potentiometer housings. NHTSA's examination of the causes of the damage to the SID–IIs revealed the rib guides for the shoulder, thorax and abdomen ribs did not sufficiently prevent vertical movement of the ribs (''rib jump''), and that the dummy's rib stops allowed excessive deflection of the ribs. The observed damage raised concerns regarding the structural integrity of the ribs and the deflection measuring potentiometers, as well as the accuracy of the dummy's deflection measurements, particularly for a dummy that could possibly be used for regulatory purposes.

After extensive evaluation of these failures, the agency began incremental modifications of the dummy to improve the dummy's durability.[3] Because vertical movement of the ribs was deemed to be one of the causes for the damage to the thorax and abdomen regions of the dummy, VRTC developed the ''floating rib guide'' system, which prevents the compressed ribs from leaving the outside perimeter of the rib guides. The new guides ''float'' with the ribs as they expand in the anterior-posterior direction during the compression process, and thereby prevent rib jump. The FRG design includes deeper rib guides than on the unmodified SID–IIs dummy in both the thorax and abdomen regions. During deflection, the ribs contact carbon fiber cover plates affixed to the rib guides in the front and rear of the dummy. Guide pins and springs allow the rib guides to expand outwards, thus maintaining the ribs within the outside perimeter of the rib guides during the deflection event.

In addition, the shoulder rib guide of the dummy was reshaped and deepened beyond the front edge of the shoulder rib to keep the shoulder rib from moving vertically during its compression. The damping material of the shoulder rib

[2] NHTSA has placed in docket 17694 a technical report entitled, ''Development of the SID–IIsFRG,'' Rhule and Hagedorn, November 2003, which describes the need for and extent and purpose of the FRG modifications.

[3] The technical report ''Development of the SID–IIs FRG,'' *supra*, describes the history and evaluation of the design changes made to the SID–IIs dummy between the fall of 2000 and the spring of 2003.

assembly was made thinner and spanned the entire width of the steel band. The FRG design used vinyl-coated aluminum rib stops to reduce excessive rib deflection, as excessive deflection was also one of the causes of bent potentiometer shafts and crushed potentiometer housings. To further protect the instrumentation, the new rib stops were located to reduce the maximum lateral rib deflection from 69 mm to 60 mm.[4]

NHTSA conducted sled tests and air bag out-of-position tests comparing the durability of the FRG dummy to an unmodified SID–IIs dummy. The tests showed that the SID–IIsFRG design prevented rib jump and potentiometer damage that were evident in the unmodified dummy. These results are discussed in section VII of this preamble.

NHTSA also conducted tests to compare the measurement capabilities and response levels of the SID–IIsFRG to the SID–IIs dummy (''Summary of the NHTSA Evaluation of the SID–IIsFRG Side Impact Crash Test Dummy Including Assessment of Durability, Biofidelity, Repeatability, Reproducibility and Directional Sensitivity'' (November 2004), *supra.*) The SID–IIsFRG displayed comparable measurements in all conditions except for high-speed flat wall sled tests and high-speed purely lateral probe impacts to the upper torso of the dummy. During these tests, the SID–IIsFRG dummy exhibited smaller rib deflections (10 percent smaller), but larger thorax load wall forces (17 percent) and T1 accelerations (20 percent larger) than the SID–IIs. Similar trends of reduced chest deflections between SID–IIs FRG and SID–IIs were reported by Transport Canada in a set of paired side impact crash tests of two identical Camry vehicles in limited vehicle crash tests (''SID–IIs Response in Side Impact Testing,'' Tylko and Dalmotas, SAE Paper No. 2004–01–0350).

NHTSA also conducted two pairs of repeat crash tests comparing the SID–IIsFRG and the SID–IIs (''Development of the SID–IIsFRG,'' *supra*). The two tests included repeat oblique pole impacts with a dummy in the driver seat of a 2002 Ford Explorer. One of the tests was with the SID–IIsFRG (test number v4563), and the other was with the SID–IIs (test number v4601). NHTSA also conducted a pair of repeat tests using the Side New Car Assessment Program (NCAP) protocol[5] with a 2001 Ford Focus, the first with a SID–IIsFRG in the driver's seat and an unmodified SID–IIs in the rear left passenger seat (test number v4576), and the second with an unmodified SID–IIs in the driver's seat and a SID–IIsFRG in the rear left passenger seat (test number v4562).

In this limited set of repeat crash tests by the agency, the results indicated that maximum thorax and abdomen deflections for the SID–IIsFRG, for the most part, were less than those of the SID–IIs. The limited crash test results appear to be consistent in trend with impactor and sled test results.

III. Description

A technical report and other materials describing the SID–IIsFRG in detail have been placed in the docket for today's NPRM (Docket No. 18865) and in Docket No. 17694. The specifications for the proposed SID–IIsFRG consist of: (a) A drawing package containing all of the technical details of the dummy; (b) a parts list; and (c) a manual containing procedures for assembly, disassembly, and inspection (PADI) of dummy components. These materials have been placed in Docket No. 18865. These drawings and specifications ensure that the dummies are uniform in design and construction. The certification tests proposed in this NPRM would assure that the dummy responses are within the established qualification corridors and further validate the uniformity of dummy assembly, structural integrity, and adequacy of instrumentation. As a result, the repeatability and reproducibility of the dummy's performance in dynamic testing would be ensured.

Drawings and specifications for the SID–IIsFRG are available for examination in the NHTSA docket section. Copies of those materials and the user manual may also be obtained from Leet-Melbrook, Division of New RT, 18810 Woodfield Road, Gaithersburg, MD 20879, tel. (301) 670–0090.

Anthropometry and mass of the SID–IIsFRG are based on the Hybrid III 5th percentile frontal female dummy and also generally match the size and weight of a 12- to 13-year-old child. The head and neck designs are based on the Hybrid III 5th percentile female dummy. The legs are Hybrid III 5th percentile female design available also with femur load cell instrumentation.

At the same time, the dummy's torso construction is distinctly different from other Hybrid III series of dummies as the SID–IIsFRG design is particularly oriented for assessing the potential for side impact injury. The dummy's upper torso is made up of a rigid metallic spine to which six steel bands lined with bonded polymer damping material are attached to simulate the impact performance of the human shoulder (1 rib), thorax (3 ribs) and abdomen (2 ribs). Linear potentiometers are attached from the ribs to the spine for compression measurements. Provisions are available for mounting tri-axial accelerometer packs to the spine at T_1 and T_{12} and at each rib.[6] Replaceable foam pads are secured directly to the ribs and a neoprene jacket covers the complete chest assembly. The upper torso accommodates the attachment of the neck at the upper end and the lumbar spine at the lower end.

A stub arm on the impacted side is attached to the lateral aspect of the shoulder through a three-axis load cell. Tri-axial accelerometer packs can also be installed at the shoulder and at the upper and lower parts of the stub arm for side airbag inflation injury assessment.

The dummy's pelvis is a machined assembly with detachable hard urethane iliac wings at each side and covered by vinyl flesh. The pelvis design is shaped in a seated human-like posture and allows the attachment of the lumbar spine at its top and the legs at the left and right sides. The pelvis can be impacted from either side without any change in hardware. Replaceable foam crush plugs at the hip joint are used to control the lateral pelvis response. The pelvis design allows the measurement of impact loads at the acetabulum and iliac wing as well as accelerations at the pelvis center of gravity (c.g.).

The external dimension and assembly weight of the SID–IIsFRG are shown in Table 3 below. Additional dimensional information may be found in the September 2004 Technical Drawings and Specification package in Docket No. 18865.

[4] The FRG design also incorporated other changes, such as the use of a cable tie to attach the dummy's thorax and abdomen pads to the ribs, and the removal of ¼ inch from the top of the abdomen pad to avoid interference with the thorax pad.

[5] In the agency's New Car Assessment Program (NCAP), the FMVSS No. 214 moving deformable barrier impacts the vehicle at 38.5 miles per hour.

[6] T_1—sensor location on the dummy's thoracic spine equivalent to the first cervical on the human thoracic spine. T_{12}—sensor location on the dummy's thoracic spine equivalent to the 12th cervical on the human thoracic spine.

TABLE 3.—EXTERNAL DIMENSIONS AND ASSEMBLY WEIGHTS OF THE SID–IIsFRG

External dimensions			Assembly weights		
Dimension	(in)	(cm)	Segment mass	(lb)	(kg)
Erect Sitting Height	31.0	78.7	Head	8.16	3.71
Chest Circumference w/Jacket	34.5	87.6	Neck	2.00	0.91
Chest Depth	8.0	20.3	Upper Torso	26.10	11.86
Shoulder Width	13.6	34.5	Lower Torso	26.82	12.19
H-Point Height	3.4	8.6	Stub Arm	2.00	0.91
Buttock Popliteal Length	16.9	42.9	Upper Legs	13.80	6.26
Buttock to Knee Length	20.8	52.7	Lower Legs/Feet	17.90	8.12
Knee to Floor Height	15.8	40.1	Total	96.78	43.90

The SID–IIsFRG is instrumented to assess injury to the head, neck, shoulder, thorax, abdomen, pelvis, stub arm and lower extremities. A complete list of the instrumentation available for this dummy is shown in drawing 180–0000, sheet 3 of 6. Table 3—External Dimensions and Assembly.

IV. Biofidelity

Biofidelity is a measure of how well a test device duplicates the responses of a human in an impact. Two methods are currently available for assessing the biofidelity of a dummy in side impact testing. The first is a procedure of the International Organization of Standardization (ISO), referred to as the ISO TR 9790 methodology (Irwin *et al.*, ''Guidelines for Assessing the Biofidelity of Side Impact Dummies of Various Sizes and Ages,'' 2002 Stapp Car Crash Journal, Vol. 46, #2002–22–0016). It determines the biofidelity of a dummy by how well the dummy's body segment and/or subsystem impact responses replicate cadaver responses in defined impact environments. The second is the Biofidelity Ranking System developed by NHTSA (Rhule H., *et al.*, 2002 Stapp Car Crash Journal, Vol. 46, p. 477, ''Development of a New Biofidelity Ranking System for Anthropomorphic Test Devices''). The SID–IIsFRG was evaluated by both methods.

Assessment of the SID-IIsFRG by the ISO Biofidelity Classification System

The biofidelity requirements defined in ISO TR 9790 are based on two types of head drop tests, three types of lateral neck bending tests, four types of shoulder impact tests, six types of lateral thoracic tests, five abdominal test conditions and thirteen lateral pelvis impact tests. The measured response values are assessed on their fit to the established cadaver response corridors. A value of 10 is given if the dummy's segment response is completely within the boundaries of the cadaver response corridor. A value of 5 is given if the most important portion of the dummy's segment response lies within one corridor width outside of the specified performance boundaries and in others, such as for unusually complex shapes of response curves, by group judgment of a group of biomechanical experts on the fit of the data. A value of zero is given if neither of the above conditions is met.

The overall dummy's biofidelity is found by weighted average of the scores of different body regions. Five classifications indicate the degree of biofidelity of the overall dummy rating. A dummy with a rating above 8.6 is classified as excellent, 6.5 to 8.6 as good, 4.4 to 6.5 as fair, 2.6 to 4.4 as marginal, and below 2.6 as unacceptable.

The ISO methodology was used by OSRP members to evaluate the SID-IIsFRG in September 2004 (''Technical Summary of OSRP-SIDIIs Upgrade,'' September 2004). A copy of the document is in the docket for this NPRM. As shown in Table 4, the SID–IIsFRG received an ISO Biofidelity rating of 5.9, which corresponds to a ''fair'' classification. Scherer *et al.* had rated the SID–IIs Beta Prototype dummy a rating of 7.0, placing it in the ISO classification of ''good.''[7]

TABLE 4.—SUMMARY OF ISO BIOFIDELITY FOR SID–IIS AND SID–IIsFRG

Body Segment	ISO Biofidelity Classification	
	SID–IIs	SID–IIsFRG
Head	7.5	7.5
Neck	5.2	4.8
Shoulder	6.2	5.1
Thorax	7.8	6.5
Abdomen	8.8	5.7
Pelvis	5.7	5.3
Overall	7.0	5.9

[7] Scherer, *et al.*, ''SID IIs Beta+-Prototype Dummy Biomechanical Responses,'' 1998, SAE 983151.

The OSRP-developed ISO ratings for the SID–IIs and SID–IIsFRG dummies compare favorably with other side impact dummies. The overall ES–2re[8] dummy's biofidelity rating was determined to be 4.6, while the SID (49 CFR Part 572 Subpart M) and EuroSID–1 dummies received ratings of 2.3 and 4.4,[9] respectively. The SID–HIII received an overall rating of 3.8 (63 FR 41468).

Assessment by the NHTSA Biofidelity Ranking System

The NHTSA method of evaluating the biofidelity of a dummy determines the biofidelity based on two assessment measures: (a) The ability of a dummy to load the relevant contact surfaces as a cadaver does (termed ''External Biofidelity''); and (b) the ability of a dummy to replicate those cadaver responses that best predict injury potential (''Internal Biofidelity''). This ranking system evaluates the dummy's ability to replicate the cadaver loading responses at the whole body level, and how that body replicates the loading of interfacing external structures.

Similar to the ISO TR 9790 biofidelity rating system, the NHTSA ranking system is based on a comparison between cadaver and dummy responses in head drop tests, thorax and shoulder pendulum tests, and whole body sled tests including abdominal and pelvic offset test conditions. Each test condition is assigned a weighting factor, based on the number of human subjects tested, to form a biomechanical response corridor and the relevance of the biofidelity test to the intended test environment. For each response requirement, the cumulative variance of the dummy response relative to the

[8] The ES–2re dummy is a 50th percentile European designed adult male side impact crash test dummy that the agency has proposed to use in the proposed upgrade of FMVSS No. 214 (69 FR 27990, *supra*).

[9] Byrnes, *et al.*, ''ES–2 Dummy Biomechanical Responses,'' 2002, Stapp Car Crash Journal, Vol. 46, #2002–22–0014, p. 353.

mean cadaver response (DCV), and the cumulative variance of the mean cadaver response relative to the mean plus one standard deviation (CCV) are calculated. The ratio of DCV/CCV expresses how well the dummy response duplicates the mean cadaver response. A smaller ratio indicates better biofidelity.

Although this method does not establish an ''absolute'' ranking scale, the ranks provide a relative sense of the ''number of standard deviations'' the dummy's responses are away from the mean human response. If the dummy biofidelity ranking is below two, the dummy is behaving similar to the human cadaver. The evaluation methodology provides a comparison of both dummy response to cadaver response as well as a comparison of two or more dummies.

Comparison Between SID–IIsFRG, ES–2re and SID–HIII Dummies

Tables 5 and 6 were constructed to provide a comparison of external and internal biofidelities between the SID–IIsFRG, the ES–2re and the SID-HIII (Part 572 Subpart M) 50th percentile male side impact dummies.[10]

The data in Table 5 indicate that the SIDIIsFRG dummy has comparable Overall External Biofidelity with the ES–2re dummy and has better biofidelity than the SID–HIII dummy. At the body segment level, the SID–IIsFRG produces better External Biofidelity ranks than the ES–2re in the Head/Neck, Thorax and Abdomen and worse ranks than the ES–2re in the Shoulder and Pelvis. The SID–IIsFRG produces better External Biofidelity ranks than the SID–HIII in all body regions except the Head/Neck.

TABLE 5.—EXTERNAL BIOFIDELITY RANKS

External biofidelity	SID–IIs FRG	ES–2re	SID–HIII
Overall Rank	2.5	2.6	3.8
Head/Neck Rank	1.8	3.7	1.0
Shoulder Rank	2.6	1.4	5.1
Thorax Rank	2.8	2.9	6.1
Abdomen Rank	2.4	2.6	3.0
Pelvis Rank	3.0	2.7	3.8

Table 6 provides a comparison of the Internal Biofidelity ranks of the three dummies. The data indicate that the SID–IIsFRG Overall Biofidelity rank is better than those of the two 50th percentile male dummies, both with and without the abdomen being included in the biofidelity ranking calculations. All body region Internal Biofidelity ranks of the SID–IIsFRG are better than, or comparable to, those of the ES–2re and SID–HIII.

TABLE 6.—INTERNAL BIOFIDELITY RANKS

Internal biofidelity	SID–IIs (FRG)	ES–2re	SID–HIII
Overall Rank with abdomen	1.5	n/a	n/a
Overall Rank without abdomen	1.3	1.6	1.9
Head Rank	0.4	1.0	1.1
Thorax Rank	[1] 1.8	[1] 1.9	[2] 2.2
Abdomen Rank	2.0	n/a	n/a
Pelvis Rank	[3] 1.6	[3] 2.0	[3] 2.5

n/a—Not applicable.
[1] Rib defl & T–12 lat accel.
[2] TTI.
[3] Pelvis lateral acceleration.

Based on the Overall External and Internal Biofidelity ranks, the SID–IIsFRG and the ES–2re dummies were found to be nearly equivalent and are lower than the SID–HIII dummy.[11]

Based on the information from the biofidelity assessment, the agency tentatively concludes that the SID–IIsFRG is well suited for assessing the risk of injury to the small size occupant segment.

V. Repeatability and Reproducibility

A dummy's repeatability and reproducibility analysis is typically based on component tests and a series of sled tests. In the tests, the impact input is carefully controlled to minimize the variability of external effects on the dummy's response. Component tests are better controlled, and thus produce more reliable estimates of the dummy's repeatability and reproducibility than is possible in sled and vehicle tests. Component tests are also needed to certify the dummy's performance relative to the established response corridors for each major body segment. That is, if the dummy's component is or becomes deficient, the certification test will identify to the user that the component will not respond properly in impact tests, and that a replacement of parts should precede further testing. Sled tests, on the other hand, offer a method of efficiently evaluating the dummy as a complete system in an environment much like a vehicle test. Sled tests are needed to establish the consistency of the dummy's kinematics, its impact response as an assembly, and the integrity of the dummy's structure and instrumentation under controlled and representative crash environment test conditions.

Two SID–IIsFRG dummies were tested and exposed to both component

[10] The SID–IIsFRG and the ES–2re ranks were calculated primarily on data from sled tests at the Medical College of Wisconsin and impactor tests at VRTC. The SID–HIII rankings were calculated based on data obtained in VRTC tests.

[11] As noted in the Technical Report for the SID–IIsFRG, NHTSA also compared the biofidelities of the SID–IIs and the SID–IIsFRG by the NHTSA method and found that the dummy responses are substantially comparable to the mean cadaver responses and to each other.

and sled test conditions multiple times to determine the dummy's ability to respond consistently. The evaluation of the SID–IIsFRG during these tests is described in the following technical reports: ''Repeatability and Reproducibility Analysis of the SID–IIsFRG Dummy in the Sled Test Environment,'' February 2004; and ''Repeatability and Reproducibility Analysis of the SID–IIsFRG Dummy in the Certification Test Environment,'' March 2004 (see NHTSA Docket No. 17694) and ''Summary of the NHTSA Evaluation of the SID–IIsFRG Side Impact Crash Test Dummy Including Assessment of Durability, Biofidelity, Repeatability, Reproducibility and Directional Sensitivity'' (Docket No. 18865). The following discussion summarizes the finding of these reports.

a. Component Tests

Component tests were conducted on head, neck, shoulder, thorax with arm, thorax without arm, abdomen, and pelvis body regions. The tests are described in Section X of this preamble, ''Proposed certification tests.'' The repeatability assessment was made using Coefficient of Variation (CV) in percentage as a measure. A CV value of less than 5 percent is considered excellent, 5–8 percent good, 8–10 percent acceptable, and above 10 percent unacceptable.[12] The reproducibility was established by comparing the percent CV of two different dummies' combined responses.

The results of the component repeatability tests indicate ''excellent'' repeatability for the SID–IIsFRG dummy for all components except for the thorax with arm, which has a ''good'' rating.

The results of the component tests generally indicated ''excellent'' to ''good'' reproducibility for the dummy for all components. The pelvis lateral acceleration was the only elevated reproducibility response at a CV of 9.1 (''acceptable''). The agency believes that some of this elevated variability was due to inconsistent force-deflection characteristics of the pelvis plug. As described in Section VI of this preamble, we believe that the variability of the pelvis lateral acceleration can be improved by incorporating force-deflection limits for the pelvis plug into the specifications for the test dummy. Today's NPRM proposes such performance requirements in Section VI of this preamble.

b. Sled Tests

The sled tests were conducted on a Hyge-type sled system, on which a bench seat and impact load wall were mounted. During the test, the SID–IIsFRG slid down the bench seat and impacted the rigid load wall. The first set of tests was conducted with a flat load wall at 6.7 meters/second (m/s). The selected impact speed reflected one of the impact environments in agency-sponsored PMHS (post-mortem human subject) tests that provided a partial basis for the development of biomechanical performance corridors. However, in this test series, the shoulder rib was found to have bottomed out against the rib stops.

In order to produce a more suitable test condition in the range of intensity that would be expected in a crash test, the sled speed was reduced and a second series of three tests was conducted (with a flat wall) at 6.0 m/s. The dummy's arm was positioned down in these flat wall tests. The third series of tests was also conducted at 6.0 m/s with a 101 mm abdomen offset block on the load wall (''abdominal offset tests''), and with the dummy's arm in the up orientation. The 101 mm offset block was oriented such that it would impact the abdomen only, above the pelvis and below the lower thoracic rib. The objective of the abdomen offset tests was to provide a test environment with severe loading of the abdominal region.

1. 6.7 m/s Flat Wall Test Results

Generally the responses in the 6.7 m/s flat wall sled tests displayed either excellent or good repeatability in all measurements, except for concerns that the SID–IIsFRG dummy's shoulder rib was at or very close to reaching the maximum available displacement.[13] The SID–IIsFRG dummies also generally demonstrated excellent or good reproducibility for measurements proposed for incorporation into FMVSS No. 214 (69 FR 27990, *supra*).

2. 6.0 m/s Flat Wall Test Results

The dummies exhibited overall excellent or good repeatability in all injury indicating measurements in this test series. However, the resultant pelvis acceleration of dummy serial number (S/N) #56 had a marginally unacceptable CV of = 10.9%. NHTSA notes that the CV for resultant pelvis acceleration was calculated using the highest peak value within the data trace, which could be either the first or the second peak. NHTSA believes that the magnitude of the peak, and whether it was the first or the second peak during the impact, was determined by the stiffness characteristic of the pelvis plugs used in the tests. An excessively stiff plug would be the cause for high first peaks usually occurring within the first 5 ms in certification tests, while a softer plug would favor the predominance of a higher second peak, occurring in the latter part of the impact event, that is later than 5 ms from time of impact. The agency believes that the performance requirements specified in today's document for the pelvis plug will prevent use of excessively stiff plugs, and that softer plugs will result in a more consistent pelvis response measurement.

3. Abdominal Offset Tests

The dummies demonstrated excellent or good repeatability and reproducibility in all of the abdominal offset test measurements, except that the CV of the peak resultant pelvis acceleration for one of the dummies was 10.5%. NHTSA believes that the elevated CV was due to the variability of the pelvis plug response.

Based on the testing of the SID–IIsFRG dummy, the agency tentatively concludes that the repeatability and reproducibility of the SID–IIsFRG's responses establishes the suitability for use in the agency's side impact test programs.

VI. Pelvis Plug

The stiffness limits of the pelvis plug proposed in this NPRM affect mostly the peak pelvic acceleration, peak acetabulum force, and peak iliac force levels of the dummy, as well as the maximum force measured by the impacting pendulum. In the pelvis certification test of the dummy, the pendulum impact probe is centered on the pelvis plug that is mounted within the pelvis flesh cavity in front of and in line with the acetabulum load cell's longitudinal axis either at the right or left H-points of the dummy (depending on the side of the dummy to be impacted). The original recommended practice was to require that the pelvis plug be discarded after each impact.

In agency testing, NHTSA observed that some of the data traces of the dummy's pelvis acceleration showed an inconsistent first peak in the data trace that was generated by the probe's impact. (''Summary of the NHTSA Evaluation of the SID–IIsFRG Side Impact Crash Test Dummy Including Assessment of Durability, Biofidelity, Repeatability, Reproducibility and Directional Sensitivity'' (November 2004), *supra*.) Agency evaluation showed that the inconsistency of the

[12] ISO/TC22/SC12/WG5.

[13] Because the shoulder rib almost always reached maximum stroke and contacted the rib stops in this 6.7 m/s test, the agency did not assess the repeatability or reproducibility of the upper spine (T_1) acceleration measurements or the shoulder rib deflection in this test.

first peak acceleration response was caused by variability of the crush characteristics of the pelvis plugs (*i.e.*, variability of the resistance force during compression) rather than by other characteristics of the dummy. The plug as originally specified for the SID–IIs provided practically no control over its stiffness characteristics.

Agency evaluation indicated that control of the crush characteristics of the pelvis plug would significantly improve the consistency of all of the dummy's pelvis responses as well as the force values measured by the impact probe. Based on an evaluation of plugs with a variety of force deflection characteristics, NHTSA has developed a force-displacement corridor for the pelvis plug that assures less variability of the pelvis acceleration response. As a result, a test procedure was developed for measuring the force-displacement characteristics of the plugs. The proposed procedure evaluates a plug by quasi-statically compressing it to a deflection range between 22 and 25 mm and a corresponding resistance force between 1920 and 2160 Newtons (N) at minimum compression and 2000 to 2240 N at maximum compression.[14] (*See* Drawing—Plug Pelvis #180–4450.)[15] Only plugs that meet the specified force levels at prescribed compression would be certified for use in a side impact test using the dummy.

A plug is certified after passing the compression test. The agency anticipates that users may either purchase the plugs commercially or certify the plugs themselves. For pelvis calibration, the certified plug is inserted into the pelvis cavity of the dummy and the dummy's pelvis is calibrated according to the proposed Part 572 test procedure. It should be noted that the pelvis plugs can only be used once per either vehicle crash test or pelvis certification application. After the dummy's pelvis is calibrated, the plug must be discarded. A new certified plug is inserted into the pelvis cavity of the dummy for every crash test incorporating the SID–IIsFRG. Carefully controlled and certified crush characteristics of the plugs will assure that their use will produce consistent and reliable pelvis response in the impact environment.

[14] The proposed values may slightly change for purposes of a final rule as new data on plug deformation characteristics become available.

[15] The procedure and proposed force-displacement requirements are specified on this drawing for the pelvis plug, which is part of the drawing package for the SID–IIsFRG dummy.

VII. Durability

NHTSA examined the durability of the SID–IIs dummy in the context of the potential use of the dummy for regulatory purposes. In testing under FMVSS compliance and NHTSA's consumer information programs, test dummies are exposed to a wide range of side crash conditions. They may be tested with vehicles with highly advanced crashworthiness technologies and with vehicles that lack adequate structure and/or features that effectively mitigate the crash forces. A crash test dummy has to have sufficient durability to maintain its structural integrity and measurement ability throughout this range of potential test conditions.

Background

The agency's assessment of the SID–IIs began with an evaluation of the dynamic performance of the dummy in sled tests conducted at 8.9 m/s and 6.7 m/s with various impact surfaces.[16] These test velocities were chosen to replicate agency-sponsored PMHS impacts in sled tests involving 8.9 m/s and 6.7 m/s changes in velocity.[17] Those NHTSA PMHS tests had approximated some of the biomechanical tests performed in the 1980s and 1990s by Wayne State University, University of Michigan Transportation Research Institute and others that were used to develop the ISO 9790 impact response corridors for assessing the biofidelity of test dummies.[18] The biomechanical data from the PMHS tests enabled NHTSA to develop the injury criteria that would predict the risk of injury in side impact crashes.[19]

One finding of the sled tests was that the 8.9 m/s test was too severe to assess the durability and other characteristics of the dummy. Impact tests of the SID–IIs dummy into a 4-inch padded 103 kPa flat wall at 8.9 m/s indicated abdominal rib deflections as high as 62 mm. Impacts into a 3-inch 400 kPa padded flat wall at 8.9 m/s produced abdominal rib deflections bordering 70 mm, including an indication of flat topping. (Flat topping is an indication that the dummy's rib deflection mechanism is either binding or reaching the end of the available stroke, and consequently, the dummy's abdomen is not responding correctly to the load from the intruding side structure. When flat topping occurs, the potentiometer ceases to produce useful deflection measurements, and in some instances experiences physical damage.) Some of these abdominal deflections were in excess of predicting a probability of a 50% risk of AIS 4+ abdominal injury.

On the other hand, NHTSA found that the 6.7 m/s sled test was more appropriate for evaluating the durability of the dummy. Sled impacts into a padded wall at 6.7 m/s yielded maximum abdominal rib deflections of approximately 45 mm with 103 kPa padding and 61 mm with 400 kPa padding. Inasmuch as the 61 mm abdominal rib deflection was just above the 25% probability of AIS 4+ injury level and the deflection data trace contained no indication of flat topping or other signal irregularities, the 6.7 m/s impact speed was selected as an impact intensity that the dummy must withstand without structural damage and instrumentation failures.[20] The SID–IIs did not show durability problems in the 6.7 m/s sled tests into a padded wall.

Follow On Tests

Follow on tests, however, indicated a possible durability problem with the SID–IIs in 6.7 m/s sled tests using a rigid wall with a 101 mm abdominal offset. The agency conducted the tests to replicate biomechanical sled test impact configurations previously reported by Maltese *et al.* (''Response Corridors of Human Surrogates in Lateral Impacts,'' *supra*). These abdominal offset tests significantly damaged the dummy. Damage in some of the tests included deformed abdominal ribs, bent abdominal potentiometer shafts, and/or gouged damping material. Further analysis of the sled tests and pendulum tests with the SID–IIs suggested that either vertical motion of the ribs and/or excessive rib compression caused the damage to the ribs and the potentiometers.

[16] See ''Development of the SID–IIs FRG,'' *supra.*

[17] Maltese *et al.,* ''Response Corridors of Human Surrogates in Lateral Impacts,'' Technical Paper 2002–22–0017, Proceedings, 46th Stapp Car Crash Conference.

[18] ISO/TC 22/SC 12/WG 5, document 645.

[19] Among other findings, NHTSA determined that the SID–IIs dummy, experiencing thoracic rib deflections of 41 mm, would predict a 25% probability of AIS 4+thorax injury, and at 56 mm of rib deflection, a 50% probability of AIS 4+ injury. Further, an abdominal deflection of 59 mm produces a 25 % of risk of AIS4+, and at 67 mm, a 50% probability of AIS 4+ abdominal injury. ''Injury Criteria for Side Impact Dummies'' (NHTSA docket 17694–12).

[20] The durability tests were conducted at 6.7 m/s, whereas the tests assessing the repeatability and reproducibility of the dummy were conducted at 6.0 m/s. The 6.0 m/s test speed was appropriate for assessing the dummy's repeatability and reproducibility because tests at that velocity produce dummy responses that are seen in crash tests, and approach the limits of the injury criteria associated with the dummy at a 25% of AIS 4+ injury. Durability tests are conducted at a higher velocity to ''overload'' the dummy, to subject it to conditions that could give rise to possible durability problems in automotive crash test environments.

These failures prompted NHTSA's Vehicle Research and Test Center to search for ways to improve the abdominal rib response through a redesign of the existing SID–IIs rib guides, including subsequent introduction of floating rib guides. The agency wanted to make certain that the SID–IIs dummy was sufficiently robust and durable in all foreseeable impact environments. Modifications of the SID–IIs dummy leading to the SID–IIsFRG design are discussed in Section IIb of this preamble. The FRG design modifications have prevented damage to the dummy even under very severe loading conditions. Three test series are summarized below.

In the first series, NHTSA conducted two sets of seven 6.7 m/s sled tests to evaluate the durability of the SID–IIsFRG. They included rigid wall thorax and rigid 101 mm abdomen offset impact configurations. In contrast to previous testing of an unmodified SID–IIs dummy to these test configurations, the SID–IIsFRG experienced no damage either to the potentiometers or any of the thoracic and abdominal ribs. There were no losses of or discontinuities in the potentiometer data signals. (''Development of the SID–IIs FRG,'' Section 7.3, *supra.* Other durability tests are also discussed in this report.)

In another series evaluating the FRG design, the agency tested the durability of the FRG revised shoulder rib (containing a wider rib damping material area) and redesigned shoulder rib guide. An out-of-position side air bag test in the passenger side of a 2000 BMW 528i was selected because that test had resulted in damage to both the shoulder rib and shoulder potentiometer of an unmodified SID–IIs. In the tests, the dummy was positioned directly against the side air bag, as outlined by the Technical Working Group (Lund, A., Chairman of the Side Air Bag Out-of-Position Injury Technical Working Group, ''Recommended Procedures for Evaluating Occupant Injury Risk from Deploying Side Airbags,'' August 2000). The test conditions allowed the side air bag to contact the thoracic and abdominal ribs with an upward component. In these tests, the SID–IIsFRG had none of the damage to the shoulder rib and shoulder potentiometer that was observed in the unmodified SID–IIs. The shoulder rib guide design prevented the rib from jumping out of the rib guide, thus eliminating permanent rib distortion and damaging the potentiometer. ''Development of the SID–IIs FRG,'' Section 7.4.

In a third series of durability pendulum tests, rigidly fixed thoraxes of the unmodified SID–IIs and the SID–IIsFRG, with their jackets off, were tested in a perpendicular, 15 degree upward impact configuration at a velocity of 2.84 m/s (6.4 miles per hour). When subjected to a localized pendulum impact centered on #2 thoracic rib, the potentiometer shafts of the unmodified SID–IIs bent, and potentiometer bushings pulled out of the potentiometer bearing assemblies. *Id.,* Section 7.9. In contrast, the SID–IIsFRG potentiometer measured rib deflections while sustaining no structural damage.

In sum, the FRG design has significantly improved the durability of the SID–IIs dummy and made it useful for the assessment of risk injury in the most severe automotive impact environments.[21]

VIII. Reversibility for Right and Left Use

The SID–IIsFRG is designed to have equivalent performance when impacted from either the left or right side. However, most agency tests have been left side impacts. To convert the dummy's impact side from left to right side and vice versa, the entire dummy's thorax, abdomen, and shoulder structure, upon disengagement of the neck and of the lumbar spine at the lower torso interfaces, is rotated as a unit around the vertical axis with respect to the neck and the lumbar spine without any further modifications. Limited agency testing of the dummy converted from left to right side impact indicated complete compliance to the calibration corridors, except for the head response being below the lower calibration limit by 1g. The agency does not believe this to be a problem, since the head used in this test was a single test of a dummy build with consideration for only left side impact. Once the calibration specifications are proposed for right and left side impacts, the vehicle manufacturers should have no problem manufacturing the heads complying to the calibration specifications for both right and left side impacts.

The method for reversing the dummy for use in either left-or right-side impacts is discussed in the PADI document for the SID–IIsFRG dummy.

IX. Directional Impact Sensitivity

Limited NHTSA tests indicate that the SID–IIsFRG dummy's thoracic and abdominal rib deflection and upper spine (T_{01}) and lower spine (T_{12}) acceleration measurements exhibit a degree of directional sensitivity depending on pendulum impact angle and velocity. The agency conducted pendulum oblique impact tests at 4.3 m/s on the dummy's shoulder, thorax, and abdomen. Tests were conducted on the SID–IIsFRG at 4.3 m/s with the dummy's midsagittal plane oriented perpendicular to the trajectory of the impact probe, and at an oblique frontal angle of +30 degrees, +15 degrees and at −15 degrees posterior to the lateral plane of the dummy. The dummy in those tests measured reduced shoulder, thoracic and abdominal rib deflections in the +30 and +15 degrees oblique impacts when compared to pure lateral impacts. The thoracic reduction ratios were 0.78 and 0.79 for oblique angles of +15 and −15 degrees. Similar reduction ratios in deflection are experienced in abdominal and shoulder impacts tests in +30 degree impacts, but the ratios reduce as the angle decreases to +15 degrees. The SID–IIsFRG dummy's peak Y (lateral) acceleration of the upper spine and lower spines in 4.3 m/s oblique impacts show lower levels of directional sensitivity as compared to the deflection measurements, except for the elevated ratios of the upper spine in abdominal impact at +15 degrees (1.27) and higher ratios of lower spine (3.22) and upper spine (2.20) accelerations in +30 degree impacts.

To NHTSA's knowledge, biomechanical data on whether and the degree to which human cadavers experience directional sensitivity in oblique impacts do not exist. It is unknown how the dummy's directional sensitivity relates to the human experience.

While the pendulum tests show that directional sensitivity of the dummy's ribcage exists, the directional sensitivity of the SID–IIsFRG in +15 and −15 degree impacts appears comparable to those of other side impact dummies. Further, the loading of the dummy in the pendulum tests is unlike the loading experienced in a vehicle crash test. The pendulum has a small and rigid impact face and a relatively small mass that is intended to load a specific localized region of the dummy. In contrast, in a vehicle crash test, an intruding vehicle structure loads the dummy in multiple areas during a collision. The intruding area is usually fairly large, is typically energy absorbing, and changes its configuration and force of impact direction during the crash. The agency is not aware of vehicle crash test data that provides evidence of consistent increases or decreases in the dummy responses due to oblique loading. Accordingly, while the pendulum tests indicate that the dummy has some

[21] There are other views as to the need for the improvements to the SID–IIs. Comments to the May 17, 2004, NPRM on FMVSS No. 214 can be viewed in NHTSA Docket 17694.

sensitivity to impact direction, this finding has not been established as being relevant to loading conditions in vehicle tests.

X. Proposed Calibration Tests

The proposed calibration procedures in general follow the test conditions and specifications contained in FTSS's document, ''SID–IIs Small Side Impact Crash Test Dummy User's Manual,'' February 2002. NHTSA used this document as a basis because of FTSS involvement with OSRP in the design and development of the dummy.

Head Drop Test Specifications

The head is dropped from 200 mm onto a flat, rigid steel plate such that the midsagittal plane of the head makes a 35 degree angle with respect to the impact surface while the head's anterior-posterior axis remains horizontal. When the dummy head is dropped in accordance with the above test conditions, the resultant acceleration of the center of gravity of the head must be between 125 and 145 g's. This proposed corridor is narrower than that specified by FTSS for this dummy (115–145 g's). The NHTSA data base, consisting of two heads dropped in a series five impacts each, indicated that the SID–IIsFRG head is capable of meeting the narrower limits.

Neck Pendulum Test

The proposed test procedure involves attaching the dummy's neck-headform assembly to a pendulum fixture. The pendulum is raised to a height from which it falls to achieve a velocity of 5.57 ± 0.06 m/s at the instant the pendulum hits the hexcell deceleration block. Based on tests of two neck-headform assemblies, the agency determined that the neck would limit the headform lateral flexion-rotation between 74 and 79 degrees, and the resistance moment about the occipital condyle from -40 to -45 N–m compared to 72–82 degrees and maximum moment of -36 to -43 N–m suggested in the FTSS user manual.

Thorax

The dummy's thoracic response is ascertained by testing the thorax with the arm and the thorax without the arm. In the tests, the dummy is seated on a specified bench seat. The thorax with arm test calls for the dummy's arm being oriented downward to the lowest detent. A pendulum impactor is guided so as to strike the dummy's arm at 6.7 m/s at the midpoint level of the second rib. The dummy's shoulder rib as well as its upper, middle and lower thorax ribs would have to meet deflection limits of 28–34 mm, 23–28 mm, 28–33 mm; and 31–36 mm, respectively. In addition, the peak accelerations would have to be 40 to 46 g's at the upper spine (T_1) and 37 to 41 g's at the lower spine (T_{12}). FTSS suggests in its SID–IIs user manual deflection limits for the upper rib of 24–32 mm, for middle rib 26–42 mm, and for the lower rib 34–42 mm, and for accelerations the limits of 35–50 g's for the upper and 22–48 g's for the lower spines. However, while the FTSS suggested limits in general are broader in range they are not directly comparable to the SID–IIsFRG dummy performance values, because of differences in the thorax and shoulder designs between the two dummy types.

The test of the thorax without the dummy's arm is conducted in the same way as the thorax with arm test, except that the stub arm is removed and the impact by the pendulum is at 4.3 m/s. The upper, middle and lower ribs would have to meet the deflection limits of 33 to 39 mm, 38 to 43 mm, and 33–39 mm, respectively, as well as limit the peak acceleration of the upper (T_1) spine between 14 and 18 g's and the lower (T_{12}) spine between 8 and 12 g's. FTSS suggested limits for SID–IIs upper rib deflection is 30–44 mm, for the middle rib 42–58 mm, and for the lower rib 36–52 mm, and accelerations the limits of 13–19 g's for the upper and 8–12g's for the lower spines. As in the thorax test with arms, the FTSS suggested limits in general are broader in range. However, they are not directly comparable to the SID–IIsFRG dummy performance values because of differences in the thorax and shoulder designs between the two dummies.

Abdomen

The abdomen assembly is part of the upper thorax assembly and is represented by two ribs and the deflection sensors. The abdomen test is performed on a seated dummy with the dummy's arm removed. When the dummy's abdomen is impacted by a pendulum at 4.3 m/s, the deflection of each abdominal rib would have to be between 36 and 42 mm, and the peak acceleration of the lower spine (T_{12}) laterally oriented accelerometer range between 11 g's and 15 g's. FTSS suggested abdominal deflection limits are 42–60 mm for the upper and lower abdominal ribs and 9.5–12 g's for the lower spine (T_{12}). As in thorax tests, the performance limits between the SID–IIS and FRG dummies are not directly comparable, because of differences in their abdomen designs.

Pelvis

This test would be performed on a fully assembled, seated dummy that has a certified pelvis plug meeting the force deflection characteristics specified in the designated pelvis plug drawing (see section VI, *supra*). The dummy pelvis would be impacted laterally by a pendulum at a velocity of 6.7 ± 0.1 m/s. Peak acceleration of the impactor and of the pelvis would have to be within the limits of 45 to 49 g's, and 42 and 46 g's, respectively. Peak force responses of the acetabulum would have to be between 3882 and 4270 N and peak iliac wing force response between 524 and 730 N. Comparable limits suggested in the FTSS user manual for the SID–IIs dummy's impactor and pelvis accelerations are 38–42 g's and 46–60 g's, respectively. As in thorax and abdomen tests, the performance limits between the SID–IIs and FRG dummies are not directly comparable, because of differences in the pelvis plug specifications.

Shoulder

A possible shoulder calibration test is described in the FTSS user manual, *supra.* In it, the dummy's shoulder would have to meet deflection and acceleration limits. However, the agency tentatively believes that a 4.3 m/s calibration test for the shoulder is not necessary because the evaluation of the shoulder appears to be achieved by the thorax with arm test. Both tests produced nearly identical shoulder response values. Comments are requested on this issue.

Rulemaking Analyses and Notices

Executive Order 12866 and DOT Regulatory Policies and Procedures

Executive Order 12866, ''Regulatory Planning and Review'' (58 FR 51735, October 4, 1993), provides for making determinations whether a regulatory action is ''significant'' and therefore subject to Office of Management and Budget (OMB) review and to the requirements of the Executive Order. The Order defines a ''significant regulatory action'' as one that is likely to result in a rule that may:

(1) Have an annual effect on the economy of $100 million or more or adversely affect in a material way the economy, a sector of the economy, productivity, competition, jobs, the environment, public health or safety, or State, local, or Tribal governments or communities;

(2) Create a serious inconsistency or otherwise interfere with an action taken or planned by another agency;

(3) Materially alter the budgetary impact of entitlements, grants, user fees, or loan programs or the rights and obligations of recipients thereof; or

(4) Raise novel legal or policy issues arising out of legal mandates, the President's priorities, or the principles set forth in the Executive Order.

This rulemaking action was not considered a significant regulatory action under Executive Order 12866. This rulemaking action was also determined not to be significant under the Department of Transportation's (DOT's) regulatory policies and procedures (44 FR 11034, February 26, 1979). This document proposes to amend 49 CFR Part 572 by adding design and performance specifications for a 5th percentile adult female side impact dummy that the agency may use in compliance tests of Federal side impact protection standards and other related purposes. If this proposed Part 572 rule becomes final, it would affect only those businesses that choose to manufacture or test with the dummy. It would not impose any requirements on anyone.

The cost of an uninstrumented SID–IIsFRG is $49,000. Instrumentation would add $40,470 as specified for Part 572 and compliance purposes. Fully instrumenting the dummy (beyond that specified in this notice) could add up to $135,088, if full instrumentation were desired by dummy users. Full instrumentation is not required by this NPRM. Because the economic impacts of this proposal are so minimal, no further regulatory evaluation is necessary.

Regulatory Flexibility Act

Pursuant to the Regulatory Flexibility Act (5 U.S.C. 601 *et seq.,* as amended by the Small Business Regulatory Enforcement Fairness Act (SBREFA) of 1996), whenever an agency is required to publish a proposed or final rule, it must prepare and make available for public comment a regulatory flexibility analysis that describes the effect of the rule on small entities (*i.e.,* small businesses, small organizations, and small governmental jurisdictions), unless the head of the agency certifies the rule will not have a significant economic impact on a substantial number of small entities. The Small Business Administration's regulations at 13 CFR Part 121 define a small business, in part, as a business entity ''which operates primarily within the United States.'' (13 CFR 121.105(a)).

We have considered the effects of this rulemaking under the Regulatory Flexibility Act. I hereby certify that the proposed rulemaking action would not have a significant economic impact on a substantial number of small entities. This action would not have a significant economic impact on a substantial number of small entities because the addition of the test dummy to Part 572 would not impose any requirements on anyone. This rulemaking action by NHTSA does not require anyone to manufacture the dummy or to test vehicles with it.

National Environmental Policy Act

NHTSA has analyzed this proposal for the purposes of the National Environmental Policy Act and determined that it will not have any significant impact on the quality of the human environment.

Executive Order 13132 (Federalism)

Executive Order 13132 requires agencies to develop an accountable process to ensure ''meaningful and timely input by State and local officials in the development of regulatory policies that have federalism implications.'' ''Policies that have federalism implications'' is defined in the Executive Order to include regulations that have ''substantial direct effects on the States, on the relationship between the national government and the States, or on the distribution of power and responsibilities among the various levels of government.''

NHTSA has analyzed this proposed amendment in accordance with the principles and criteria set forth in Executive Order 13132. The agency has determined that this proposal does not have sufficient federalism implications to warrant consultation and the preparation of a Federalism Assessment.

Civil Justice Reform

This proposed rule would not have any retroactive effect. Under 49 U.S.C. 30103, whenever a Federal motor vehicle safety standard is in effect, a State may not adopt or maintain a safety standard applicable to the same aspect of performance which is not identical to the Federal standard, except to the extent that the state requirement imposes a higher level of performance and applies only to vehicles procured for the State's use. 49 U.S.C. 30161 sets forth a procedure for judicial review of final rules establishing, amending, or revoking Federal motor vehicle safety standards. That section does not require submission of a petition for reconsideration or other administrative proceedings before parties may file suit in court.

Paperwork Reduction Act

Under the Paperwork Reduction Act of 1995, a person is not required to respond to a collection of information by a Federal agency unless the collection displays a valid control number from the Office of Management and Budget (OMB). This proposed rule would not have any requirements that are considered to be information collection requirements as defined by the OMB in 5 CFR Part 1320.

National Technology Transfer and Advancement Act

Section 12(d) of the National Technology Transfer and Advancement Act of 1995 (NTTAA), Public Law 104–113, section 12(d) (15 U.S.C. 272) directs NHTSA to use voluntary consensus standards in its regulatory activities unless doing so would be inconsistent with applicable law or otherwise impractical. Voluntary consensus standards are technical standards (*e.g.*, materials specifications, test methods, sampling procedures, and business practices) that are developed or adopted by voluntary consensus standards bodies, such as the Society of Automotive Engineers (SAE). The NTTAA directs NHTSA to provide Congress, through OMB, explanations when the agency decides not to use available and applicable voluntary consensus standards.

This proposed rulemaking involves technical standards. The NPRM proposes to use SAE standards in the specifications for the instrumentation of the SID-IIsFRG, which accords with the NTTAA. This proposal would adopt most of the specifications of the SID-IIs which was developed by the private sector, except for the FRG modifications. As explained in this preamble, the agency has tentatively determined that the FRG modifications are needed to assure the durability of the test dummy in crash tests.

Unfunded Mandates Reform Act

Section 202 of the Unfunded Mandates Reform Act of 1995 (UMRA), Public Law 104–4, Federal law requires agencies to prepare a written assessment of the costs, benefits, and other effects of proposed or final rules that include a Federal mandate likely to result in the expenditure by State, local, or tribal governments, in the aggregate, or by the private sector, of more than $100 million annually (adjusted for inflation with base year of 1995). Before promulgating a NHTSA rule for which a written statement is needed, section 205 of the UMRA generally requires the agency to identify and consider a

reasonable number of regulatory alternatives and adopt the least costly, most cost-effective, or least burdensome alternative that achieves the objectives of the rule.

This proposed rule would not impose any unfunded mandates under the UMRA. This proposed rule would not meet the definition of a Federal mandate because it would not impose requirements on anyone. It would amend 49 CFR Part 572 by adding design and performance specifications for a side impact dummy that the agency may use in the Federal motor vehicle safety standards. If this proposed rule becomes final, it would affect only those businesses that choose to manufacture or test with the dummy. It would not result in costs of $100 million or more to either State, local, or tribal governments, in the aggregate, or to the private sector.

Plain Language

Executive Order 12866 requires each agency to write all rules in plain language. Application of the principles of plain language includes consideration of the following questions:

—Has the agency organized the material to suit the public's needs?
—Are the requirements in the rule clearly stated?
—Does the rule contain technical language or jargon that is not clear?
—Would a different format (grouping and order of sections, use of headings, paragraphing) make the rule easier to understand?
—Would more (but shorter) sections be better?
—Could the agency improve clarity by adding tables, lists, or diagrams?
—What else could the agency do to make this rulemaking easier to understand?

If you have any responses to these questions, please include them in your comments on this NPRM.

Regulation Identifier Number

The Department of Transportation assigns a regulation identifier number (RIN) to each regulatory action listed in the Unified Agenda of Federal Regulations. The Regulatory Information Service Center publishes the Unified Agenda in April and October of each year. You may use the RIN contained in the heading at the beginning of this document to find this action in the Unified Agenda.

Public Participation

How Do I Prepare and Submit Comments?

Your comments must be written and in English. To ensure that your comments are correctly filed in the Docket, please include the docket number of this document in your comments.

Your comments must not be more than 15 pages long. (49 CFR 553.21). NHTSA established this limit to encourage you to write your primary comments in a concise fashion. However, you may attach necessary additional documents to your comments. There is no limit on the length of the attachments.

Please submit two copies of your comments, including the attachments, to Docket Management at the address given above under **ADDRESSES.**

You may also submit your comments to the docket electronically by logging onto the Dockets Management System Web site at *http://dms.dot.gov.* Click on ''Help & Information'' or ''Help/Info'' to obtain instructions for filing the document electronically.

How Can I Be Sure That My Comments Were Received?

If you wish Docket Management to notify you upon its receipt of your comments, enclose a self-addressed, stamped postcard in the envelope containing your comments. Upon receiving your comments, Docket Management will return the postcard by mail.

How Do I Submit Confidential Business Information?

If you wish to submit any information under a claim of confidentiality, you should submit three copies of your complete submission, including the information you claim to be confidential business information, to the Chief Counsel, NHTSA, at the address given above under **FOR FURTHER INFORMATION CONTACT.** In addition, you should submit two copies, from which you have deleted the claimed confidential business information, to Docket Management at the address given above under **ADDRESSES.** When you send a comment containing information claimed to be confidential business information, you should include a cover letter setting forth the information specified in our confidential business information regulation. (49 CFR Part 512.)

Will the Agency Consider Late Comments?

NHTSA will consider all comments that Docket Management receives before the close of business on the comment closing date indicated above under **DATES.** To the extent possible, the agency will also consider comments that Docket Management receives after that date. If Docket Management receives a comment too late for the agency to consider it in developing a final rule (assuming that one is issued), the agency will consider that comment as an informal suggestion for future rulemaking action.

How Can I Read the Comments Submitted by Other People?

You may read the comments received by Docket Management at the address given above under **ADDRESSES.** The hours of the Docket are indicated above in the same location.

You may also see the comments on the Internet. To read the comments on the Internet, take the following steps:

1. Go to the Docket Management System (DMS) Web page of the Department of Transportation (*http://dms.dot.gov/*).

2. On that page, click on ''search.''

3. On the next page (*http://dms.dot.gov/search/*), type in the four-digit docket number shown at the beginning of this document. Example: If the docket number were ''NHTSA–1998–1234,'' you would type ''1234.'' After typing the docket number, click on ''search.''

4. On the next page, which contains docket summary information for the docket you selected, click on the desired comments. You may download the comments. Although the comments are imaged documents, instead of word processing documents, the ''pdf'' versions of the documents are word searchable.

Please note that even after the comment closing date, NHTSA will continue to file relevant information in the Docket as it becomes available. Further, some people may submit late comments. Accordingly, the agency recommends that you periodically check the Docket for new material.

Anyone is able to search the electronic form of all comments received into any of our dockets by the name of the individual submitting the comment (or signing the comment, if submitted on behalf of an association, business, labor union, etc.). You may review DOT's complete Privacy Act Statement in the **Federal Register** published on April 11, 2000 (Volume 65, Number 70; Pages 19477–78) or you may visit *http://dms.dot.gov.*

List of Subjects in 49 CFR Part 572

Motor vehicle safety, Incorporation by reference.

In consideration of the foregoing, NHTSA is proposing to amend 49 CFR Part 572 as follows:

PART 572—ANTHROPOMORPHIC TEST DUMMIES

1. The authority citation for Part 572 would continue to read as follows:

Authority: 49 U.S.C. 322, 30111, 30115, 30117 and 30166; delegation of authority at 49 CFR 1.50.

2. 49 CFR part 572 would be amended by adding a new subpart V consisting of §§ 572.190 through 572.198.

The added subpart would read as follows:

Subpart V—SID–IIsFRG Side Impact Crash Test Dummy, 5th Percentile Adult Female

Sec.
572.190 Incorporated materials.
572.191 General description.
572.192 Head assembly.
572.193 Neck assembly.
572.194 Thorax with arm.
572.195 Thorax without arm.
572.196 Abdomen.
572.197 Pelvis.
572.198 Instrumentation and test conditions.
Appendix—Figures to Subpart V of Part 572

Subpart V—SID–IIsFRG Side Impact Crash Test Dummy, 5th Percentile Adult Female

§ 572.190 Incorporated materials.

(a) The following materials are hereby incorporated into this subpart by reference:

(1) A drawings and inspection package entitled ''Drawings and Specifications for the SID–IIsFRG Small Female Crash Test Dummy, September 2004'', consisting of:

(i) Drawing No. 180–0000, SID–IIsFRG Dummy Assembly, incorporated by reference in § 572.191;

(ii) Drawing No. 180–1000, Head Assembly, incorporated by reference in §§ 572.191 and 572.192 as part of a complete dummy assembly;

(iii) Drawing No. 180–2000, Neck Assembly, incorporated by reference in §§ 572.191 and 572.193 as part of a complete dummy assembly;

(iv) Drawing No. 180–3000, Upper Torso Assembly, incorporated by reference in §§ 572.191, 572.194, 572.195 and 572.196 as part of a complete dummy assembly;

(v) Drawing No. 180–4000, Lower Torso Assembly, incorporated by reference in §§ 572.191 and 572.197 as part of a complete dummy assembly;

(vi) Drawing No. 180–5000–1, Complete Leg Assembly—left, incorporated by reference in §§ 572.191 and 572.197 as part of a complete dummy assembly;

(vii) Drawing No. 180–5000–2, Complete Leg Assembly—right, incorporated by reference in §§ 572.191 and 572.197 as part of a complete dummy assembly;

(viii) Drawing No. 180–6000–1, Arm Assembly—left, incorporated by reference in §§ 572.191 and 572.194 as part of a complete dummy assembly;

(ix) Drawing No. 180–6000–2, Arm Assembly—right, incorporated by reference in §§ 572.191 and 572.194 as part of a complete dummy assembly;

(x) the ''Parts/Drawing List, Part 572 Subpart V, SID-IIs with Floating Rib Guides (SID–IIsFRG),'' September 2004, incorporated by reference in § 572.191;

(2) A procedures manual entitled ''Procedures for Assembly, Disassembly and Inspection (PADI) of the SID–IIsFRG Side Impact Crash Test Dummy, October 2004,'' incorporated by reference in § 572.191;

(3) SAE Recommended Practice J211, Rev. Mar 95 ''Instrumentation for Impact Tests—Part 1—Electronic Instrumentation'';

(4) SAE J1733 of 1994–12 ''Sign Convention for Vehicle Crash Testing''.

(b) The Director of the Federal Register approved the materials incorporated by reference in accordance with 5 U.S.C. 552(a) and 1 CFR part 51. Copies of SAE Recommended Practice J211 and SAE J1733 may be inspected at NHTSA's Technical Reference Library, 400 Seventh Street SW., Room 5109, Washington, DC. Copies of the drawing and inspection package and the PADI may be inspected in the Docket, or at the National Archives and Records Administration (NARA). For information on the availability of this material at NARA, call 202–741–6030, or go to: *http://www.archives.gov/federal_register/code_of_federal_regulations/ibr_locations.html.*

(c) The incorporated materials are available as follows:

(1) The Drawings and Specifications for the SID–IIsFRG Small Female Crash Test Dummy, September 2004, referred to in paragraph (a)(1) of this section are available in electronic format through the DOT docket management system and in paper format from Leet-Melbrook, Division of New RT, 18810 Woodfield Road, Gaithersburg, MD 20879, (301) 670–0090.

(2) The SAE materials referred to in paragraphs (a)(3) and (a)(4) of this section are available from the Society of Automotive Engineers, Inc., 400 Commonwealth Drive, Warrendale, PA 15096.

§ 572.191 General description.

(a) The SID–IIsFRG Side Impact Crash Test Dummy, small female, is defined by drawings and specifications containing the following materials:

(1) Technical drawings and specifications package P/N 180–0000, dated September 2004, the titles of which are listed in Table A;

TABLE A

Component assembly	Drawing number
Head Assembly	180–1000
Neck Assembly	180–2000
Upper Torso Assembly	180–3000
Lower Torso Assembly	180–4000
Leg Assembly—left	180–5000–1
Leg Assembly—right	180–5000–2
Arm Assembly—left	180–6000–1
Arm Assembly—right	180–6000–2

(2) The ''Parts/Drawing List, Part 572 Subpart V, SID–IIs with Floating Rib Guides (SID–IIs FRG, Alpha Version),'' dated September 2004 and containing 8 pages,

(3) A listing of available transducers-crash test sensors for the SID–IIsFRG Side Impact Crash Test Dummy, 5th percentile female, is shown in drawing 180–0000 sheet 2 of 6, dated September 2004,

(4) ''Procedures for Assembly, Disassembly and Inspection (PADI) of the SID–IIsFRG Side Impact Crash Test Dummy, September 2004,''

(5) Sign convention for signal outputs reference document SAE 1733 Information Report, titled ''Sign Convention for Vehicle Crash Testing,'' dated July 15, 1986.

(b) Exterior dimensions of the SID–IIsFRG Side Impact Crash Test Dummy are shown in drawing 180–0000 sheet 3 of 6, dated September 2004.

(c) Weights and center of gravity locations of body segments are shown in drawing 180–0000 sheet 4 of 6, dated September 2004,

(d) Adjacent segments are joined in a manner such that, except for contacts existing under static conditions, there is no additional contact between metallic elements of adjacent body segments throughout the range of motion.

(e) The structural properties of the dummy are such that the dummy conforms to this Subpart in every respect before use in any test similar to those proposed in Standard 214, Side Impact Protection (49 CFR 571.214).

§ 572.192 Head assembly.

(a) The head assembly consists of the head (drawing 180–1000), and a set of three (3) accelerometers in conformance with specifications in 49 CFR 572.198(c) and mounted as shown in drawing 180–0000 sheet 2 of 6. When tested to the procedure specified in paragraph (b) of

this section, the head assembly shall meet performance requirements specified in paragraph (c) of this section.

(b) *Test procedure.* The head shall be tested according to the procedure specified in 49 CFR 572.112(a).

(c) *Performance criteria.* (1) When the head assembly is dropped in either the right or left lateral incline orientations in accordance with procedure in 572.112(a), the measured peak resultant acceleration shall be between 125 g's and 145 g's;

(2) The resultant acceleration-time curve shall be unimodal to the extent that oscillations occurring after the main acceleration pulse shall not exceed 15% (zero to peak) of the main pulse;

(3) The longitudinal acceleration vector (X direction) shall not exceed 15 g's.

§ 572.193 Neck assembly.

(a) The neck assembly consists of parts shown in drawing 180–2000. For purposes of this test, the neck assembly is mounted within the headform assembly (180–9000) as shown in Figure V1 of this subpart. When subjected to the test procedure specified in paragraph (b) of this section, the neck-headform assembly shall meet the performance requirements specified in paragraph (c) of this section.

(b) *Test procedure.* (1) Soak the assembly in a test environment as specified in 49 CFR 572.198(i);

(2) Attach the neck-headform assembly to the 49 CFR Part 572 pendulum test fixture in either the left or right lateral orientations (Figure 22) as shown in Figure V2 of this subpart, so that the midsagittal plane of the neck-headform assembly is vertical and perpendicular to the plane of motion of the pendulum longitudinal centerline;

(3) Release the pendulum from a height sufficient to achieve a velocity of 5.57 ± 0.06 m/s measured at the center of the pendulum accelerometer, as shown in 49 CFR Part 572 Figure 15, at the instant the pendulum makes contact with the decelerating mechanism;

(4) The neck flexes without the neck-headform assembly making contact with any object;

(5) Time zero is defined as the time of initial contact between the pendulum mounted striker plate and the pendulum deceleration mechanism;

(6) Allow a period of at least thirty (30) minutes between successive tests on the same neck assembly.

(c) *Performance Criteria.* (1) The pendulum deceleration pulse is characterized in terms of decrease in velocity as obtained by integrating the pendulum acceleration output from time zero:

Time (ms)	Pendulum Delta-V (m/s)
10.0	−2.20 to −2.80
15.0	−3.40 to −4.10
20.0	−4.50 to −5.40
25.0	−5.50 to −6.10
25.0 to 100	−5.20 to −6.20

(2) The maximum translation-rotation of the midsagittal plane of the headform disk (180–9061 or 9062) in the lateral direction measured, with the rotation transducer specified in 49 CFR 572.198(d) shall be 74 to 79 degrees with respect to the longitudinal axis of the pendulum occurring between 50 and 70 ms from time zero;

(3) Peak occipital condyle moment shall not be higher than −40 Nm and not lower than −45 Nm. The moment measured by the neck upper load cell (Mx) shall be adjusted by the following formula: Mx(oc) [1]= Mx + 0.01778Fy,

(4) The decaying moment shall cross the 0 Nm line after peak moment 113ms–123 ms after time zero.

§ 572.194 Thorax with arm.

(a) The thorax is part of the upper torso assembly shown in drawing 180–3000. For the ''thorax with arm'' impact test, the dummy is tested as a complete assembly (drawing 180–0000). The dummy's thorax is equipped with T1 and T12 laterally oriented accelerometers as specified in 49 CFR 572.198(c), and with deflection potentiometers for the thorax and shoulder as specified in 180–3861 and 180–3860, respectively, installed as shown in drawing180–0000 sheet 2 of 6. When subjected to the test procedure as specified in paragraph (b) of this section, the thorax shall meet performance requirements of paragraph (c) of this section.

(b) *Test procedure.* (1) Soak the dummy assembly (180–0000) in a test environment as specified in 49 CFR 572.198(i);

(2) Seat the dummy, outfitted with the torso jacket (180–3450) and cotton underwear pants, as shown in Figure V3 of this subpart, on a certification bench, specified in Figure V4 of this subpart, with the seat pan and the seatback surfaces covered with a 2 mm thick PTFE (Teflon) sheet;

(3) Align the impact side of the seated dummy tangent to a vertical plane located within 25 mm of the side edge of the bench and set the midsagittal plane of the dummy to a vertical orientation.

(4) Push the dummy at the knees and at the upper torso with just sufficient horizontally oriented force towards the seat back until its buttocks and the back of the upper torso are in contact with the seat back. The top of the shoulder rib mount (drawing 180–3352) orientation in the fore-and-aft direction is 24.6 ± 1.0 degrees relative to horizontal.

(5) Lower the legs such that the thighs touch the seat pan, the inner part of the right and left legs at the knees are in contact with each other, the heels touch the designated support surface and the feet are vertical and as close together as possible;

(6) The dummy's thoracic lateral reference surface is 0 ± 1 degree relative to horizontal as shown in Figure V3 of this subpart;

(7) Orient the arm downward to the lowest detent;

(8) The impactor is specified in 49 CFR 572.198(a);

(9) The impactor is guided, if needed, so that at contact with the dummy's arm, its longitudinal axis is within ± 1 degree of a horizontal plane and perpendicular to the midsagittal plane of the dummy. The centerpoint of the impactor face is within 2 mm of the vertical midpoint of the second thoracic rib and coincident with a line parallel to the seat back incline passing through the center of the shoulder yoke assembly arm pivot (drawing 180–3327), as shown in Figure V3 of this subpart;

(10) The dummy's arm is impacted at 6.7 ± 0.1 m/s.

(c) *Performance criteria.* (1) While the impactor is in contact with the dummy's arm, the thoracic ribs and the shoulder shall conform to the following range of deflections:

(i) Shoulder not less than 28 mm and not more than 34 mm;

(ii) Upper thorax rib not less than 23 mm and not more than 28 mm;

(iii) Middle thorax rib not less 28 mm and not more than 33 mm;

(iv) Lower thorax rib not less than 31 mm and not more than 36 mm;

(2) Peak acceleration of the upper spine (T1) shall not be less than 40 g's and not more than 46 g's and of the lower spine (T12) not less than 37 g's and not more than 41 g's;

(3) Peak impactor acceleration shall be not less than 30 g's and not more than 36 g's.

§ 572.195 Thorax without arm.

(a) The thorax is part of the upper torso assembly shown in drawing 180–3000. For this thorax test, the dummy is tested as a complete assembly (drawing

[1] Mx(oc) is the moment at occipital condyle and Fy is the lateral shear force measured by the load cell.

180–0000) with the arm (180–6000) removed. The dummy's thorax is equipped with T1 and T12 laterally oriented accelerometers as specified in 49 CFR 572.198(c) and with deflection potentiometers for the thorax as specified in drawing 180–3861, installed as shown in drawing 180–0000 sheet 2 of 6. When subjected to the test procedure specified in paragraph (b) of this section, the thorax shall meet the performance requirements set forth in paragraph (c) of this section.

(b) *Test procedure.* (1) Soak the dummy assembly (180–0000) in a test environment as specified in 49 CFR 572.198(i);

(2) Seat the dummy, outfitted with the torso jacket (180–3450) and cotton underwear pants, as shown in Figure V5 of this subpart, on a certification bench, specified in Figure V4 of this subpart, with the seat pan and the seatback surfaces covered with a 2 mm thick PTFE (Teflon) sheet;

(3) Align the impact side of the seated dummy tangent to a vertical plane located within 25 mm of the side edge of the bench and set the midsagittal plane of the dummy to a vertical orientation.

(4) Push the dummy at the knees and at the upper torso with just sufficient horizontally oriented force towards the seat back until its buttocks and the back of the upper torso are in contact with the seat back. The top of the shoulder rib mount (drawing 180–3352) orientation in the fore-and-aft direction is 24.6 ± 1.0 degrees relative to the horizontal.

(5) Lower the legs such that the thighs touch the seat pan, the inner part of the right and left legs at the knees are in contact with each other, the heels touch the designated support surface and the feet are vertical and as close together as possible;

(6) The dummy's thoracic lateral reference surface is 0 ± 1 degree relative to the horizontal as shown in Figure V5 of this subpart;

(7) The impactor is specified in 49 CFR 572.198(a);

(8) The impactor is guided, if needed, so that at contact with the thorax, its longitudinal axis is within 1 degree of a horizontal plane and perpendicular to the midsagittal plane of the dummy. The centerpoint of the impactor face is within 2 mm of the vertical midpoint of the second thorax rib and coincident with a line parallel to the seat back incline passing through the center of the shoulder yoke assembly arm pivot (drawing 180–3327), as shown in Figure V5 of this subpart;

(9) The dummy's thorax is impacted at 4.3 ± 0.1 m/s;

(c) *Performance criteria.* (1) While the impactor is in contact with the dummy's thorax, the ribs shall conform to the following range of deflections:

(i) Upper and lower thorax ribs not less than 33 mm and not more than 39 mm;

(ii) Middle thorax rib not less than 38 mm and not more than 43 mm;

(iii) Peak acceleration of the upper spine (T1) shall not be less than 14 g's and not more than 18 g's and of the lower spine (T12) not less than 8 g's and not more than 12 g's.

(iv) Peak impactor acceleration shall not be less than 16 g's and not more than 19 g's.

(2) [Reserved]

§ 572.196 Abdomen.

(a) The abdomen assembly is part of the upper torso assembly (180–3000) and is represented by two ribs (180–3368) and the deflection sensors (180–3861). The abdomen test is conducted on the assembled dummy (180–0000) with the arm (180–6000) on the impacted side removed. The dummy is equipped with a lower spine laterally oriented accelerometer as specified in 49 CFR 572.198(c) and deflection potentiometers specified in drawing 180–3861, installed as shown in sheet 2 of drawing 180–0000. When subjected to the test procedure as specified in paragraph (b) of this section, the abdomen shall meet performance requirements of paragraph (c) of this section.

(b) *Test procedure.* (1) Soak the dummy assembly (180–0000) in a test environment as specified in 49 CFR 572.198(i);

(2) Seat the dummy, outfitted with the torso jacket (180–3450) and cotton underwear pants, as shown in Figure V6 of this subpart, on a certification bench, specified in Figure V4 of this subpart, with the seat pan and the seatback surfaces covered with a 2 mm thick PTFE (Teflon) sheet;

(3) Align the impacted side of the seated dummy tangent to a vertical plane located within 25 mm of the side edge of the bench and set the midsagittal plane of the dummy to a vertical orientation;

(4) Push the dummy at the knees and at the upper torso with just sufficient horizontally oriented force towards the seat back until its buttocks and the back of the upper torso are in contact with the seat back. The top of the shoulder rib mount (drawing 180–3352) orientation in the fore-and-aft direction is 24.6 ± 1.0 degrees relative to the horizontal;

(5) Lower the legs such that the thighs touch the seat pan, the inner part of the right and left legs at the knees are in contact with each other, the heels touch the designated support surface and the feet are vertical and as close together as possible;

(6) The dummy's thoracic lateral reference surface is within 0 ± 1 degree relative to the horizontal as shown in Figure V6 of this subpart;

(7) The impactor is specified in 49 CFR 572.198(b);

(8) The impactor is guided, if needed, so that at contact with the abdomen, its longitudinal axis is within ± 1 degree of a horizontal plane and perpendicular to the midsagittal plane of the dummy and the centerpoint of the impactor's face is within 2 mm of the vertical midpoint between the two abdominal ribs and coincident with a line parallel to the seat back incline passing through the center of the shoulder yoke assembly arm pivot (drawing 180–3327), as shown in Figure V6 of this subpart;

(9) The dummy's abdomen is impacted at 4.3 ±0.1 m/s.

(c) *Performance criteria.* (1) While the impact probe is in contact with the dummy's abdomen, the deflection of each abdominal rib shall be not less than 36 mm and not more than 42 mm;

(2) Peak acceleration of the lower spine (T12) laterally oriented accelerometer shall be not less than 11 g's and not more than 15 g's;

(3) Peak impactor acceleration shall be not less than 13 g's and not more than 16 g's.

§ 572.197 Pelvis.

(a) The pelvis is part of the lower torso assembly shown in drawing 180–4000. The pelvis test is conducted on the assembled dummy (drawing 180–0000), with the torso jacket (180–3450) removed. The dummy is equipped with a laterally oriented pelvis accelerometer as specified in 49 CFR 572.198(c), acetabulum load cell SA572–S68, and iliac wing load cell SA572–S66, mounted as shown in sheet 2 of 6 of drawing 180–0000. When subjected to the test procedure as specified in paragraph (b) of this section, the pelvis shall meet performance requirements of paragraph (c) of this section.

(b) *Test procedure.* (1) Soak the dummy assembly (180–0000) in a test environment as specified in 49 CFR 572.198(i);

(2) Seat the dummy, without the torso jacket and cotton underwear pants, as shown in Figure V7 of this subpart, on a certification bench, specified in Figure V4 of this subpart, with the seatpan and the seatback surfaces covered with a 2 mm thick PTFE (Teflon) sheet;

(3) Align the impacted side of the seated dummy tangent to a vertical

plane located within 25 mm of the side edge of the bench and set the midsagittal plane of the dummy to a vertical orientation.

(4) Push the dummy at the knees and at the upper torso with just sufficient horizontally oriented force towards the seat back until its buttocks and the back of the upper torso are in contact with the seat back. The top of the shoulder rib mount (drawing 180–3352) orientation in the fore-and-aft direction is 24.6 ± 1.0 degrees relative to the horizontal.

(5) Lower the legs such that the thighs touch the seat pan, the inner part of the right and left legs at the knees are in contact with each other, the heels touch the designated support surface and the feet are vertical and as close together as possible;

(6) The dummy's thoracic lateral reference surface is within 0 ± 1 degree relative to the horizontal as shown in Figure V7 of this subpart;

(7) The pelvis impactor is specified in 49 CFR 572.198(a);

(8) The impactor is guided, if needed, so that at contact with the pelvis, its longitudinal axis is within ± 1 degree of a horizontal plane and perpendicular to the midsagittal plane of the dummy. The centerpoint of the impactor's face is within 2 mm of the centerline of the screw (9001191) through the center of the acetabulum load cell, as shown in Figure V7 of this subpart;

(9) The dummy's pelvis is impacted at 6.7 ± 0.1 m/s.

(c) *Performance criteria.* While the impactor is contact with the pelvis:

(1) Peak acceleration of the impactor is not less than 45 g's and not more than 49 g's;

(2) Peak acceleration of the pelvis is not less than 42 g's and not more than 46 g's and occurs 5 ms or more after the impactor contacts the dummy;

(3) Peak acetabulum force is not less than 3882 N and not more than 4270 N;

(4) Peak iliac wing force is not less than 524 N and not more than 730 N.

§ 572.198 Instrumentation and test conditions.

(a) The test probe for lateral thorax and pelvis impact tests is the same as that specified in 49 CFR 572.137(a) except that its impact face diameter is 120.70 ± 0.25 mm and it has a minimum mass moment of inertia of 3646 kg-cm $_2$;

(b) The test probe for the lateral abdomen impact test is the same as that specified in 572.137(a) except that its impact face diameter is 76.20 ± 0.25 mm and it has a minimum mass moment of inertia of 3646 kg-cm $_2$;

(c) Accelerometers for the head, the thoracic spine, and the pelvis conform to specifications of SA572–S4;

(d) Rotary potentiometers for the neck-headform assembly conform to SA572–S51;

(e) Instrumentation and sensors conform to the Recommended Practice SAE J–211 (March 1995), Instrumentation for Impact Test, unless noted otherwise;

(f) All instrumented response signal measurements shall be treated to the following specifications:

(1) Head acceleration—Digitally filtered CFC 1000;

(2) Neck-headform assembly translation-rotation—Digitally filtered CFC 60;

(3) Neck pendulum, T1 and T12 thoracic spine and pelvis accelerations—Digitally filtered CFC 180;

(4) Neck forces (for the purpose of occipital condyle calculation) and moments—Digitally filtered at CFC 600;

(5) Pelvis, thorax and abdomen impactor accelerations—Digitally filtered CFC 180;

(6) Acetabulum and iliac wings forces—Digitally filtered at CFC 600;

(7) Shoulder, thorax, and abdomen deflection—Digitally filtered CFC 600.

(g) Mountings for the head, thoracic spine and pelvis accelerometers shall have no resonant frequency within a range of 3 times the frequency range of the applicable channel class;

(h) Leg joints of the test dummy are set at the force between 1 to 2 g's, which just support the limb's weight when the limbs are extended horizontally forward. The force required to move a limb segment does not exceed 2 g's throughout the range of the limb motion.

(i) Performance tests are conducted, unless specified otherwise, at any temperature from 20.6 to 22.2 degrees C. (69 to 72 degrees F.) and at any relative humidity from 10% to 70% after exposure of the dummy to those conditions for a period of 3 hours.

BILLING CODE 4910–59–P

Appendix—Figures to Subpart V of Part 572

Figure V1
NECK ATTACHED TO HEADFORM ASSEMBLY

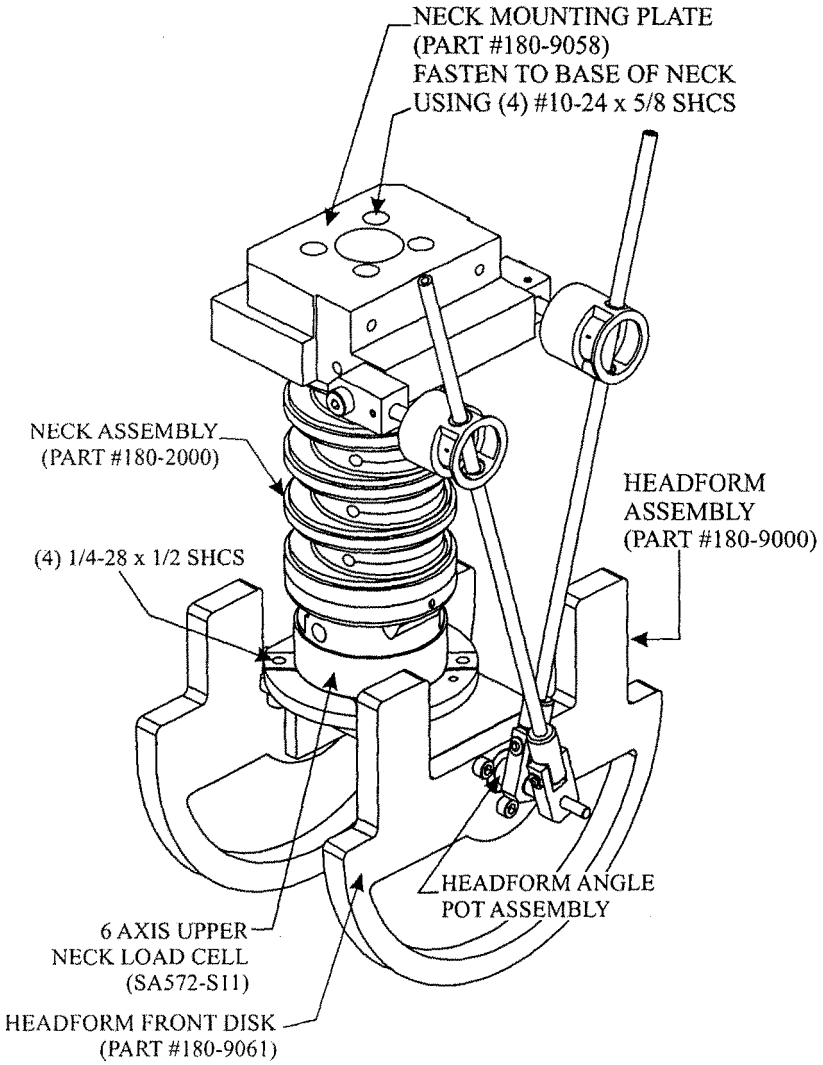

Figure V2-A
NECK/HEADFORM ATTACHED TO PENDULUM
FOR LEFT-SIDE IMPACT

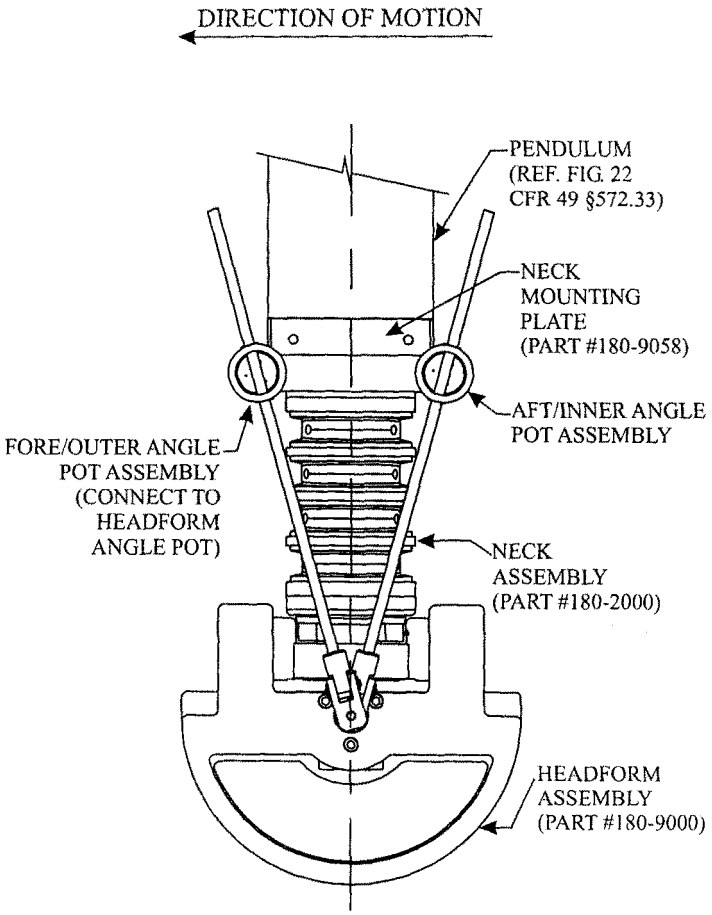

Figure V2-B
NECK/HEADFORM ATTACHED TO PENDULUM
FOR RIGHT-SIDE IMPACT

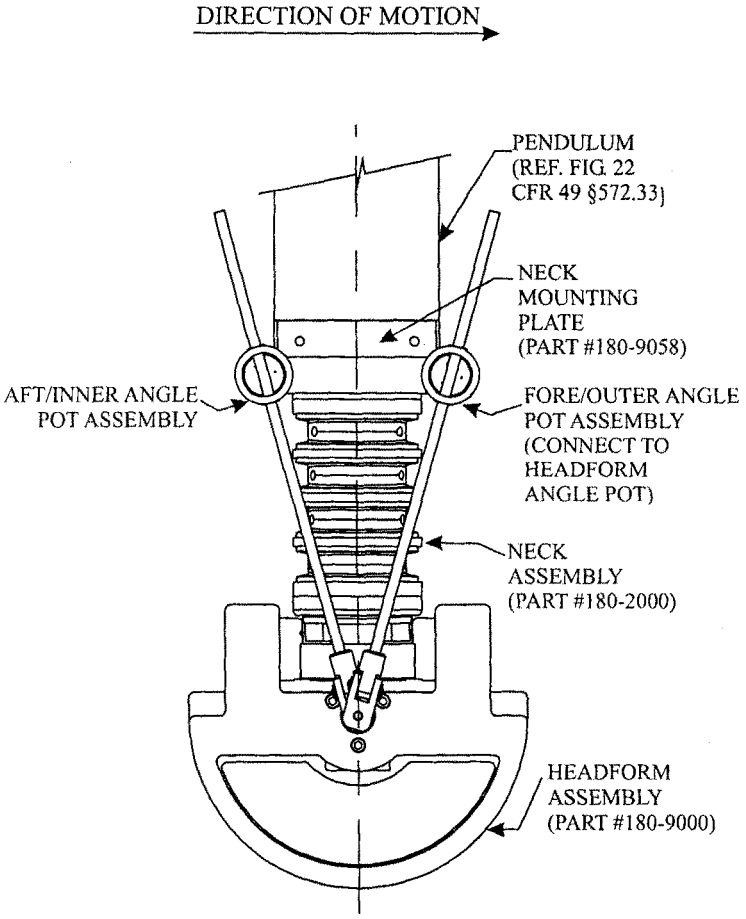

Figure V2-C

ANGLE MEASUREMENTS WITH HEADFORM SET-UP

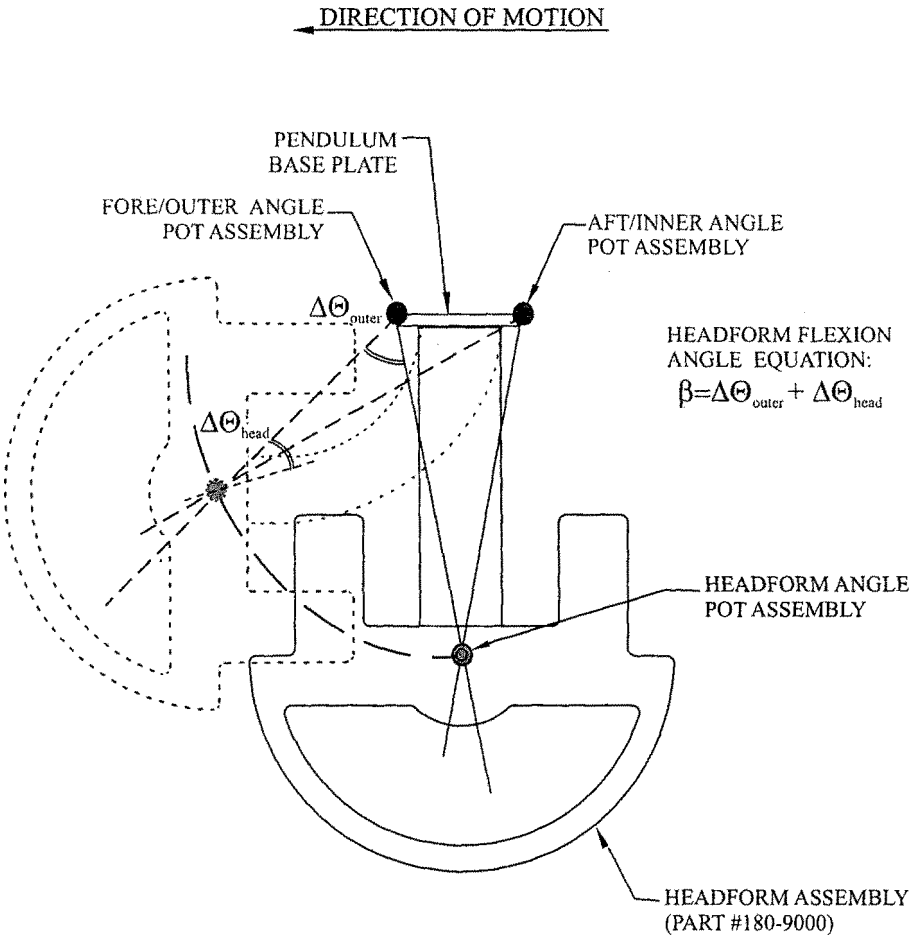

Figure V3
THORAX WITH ARM IMPACT

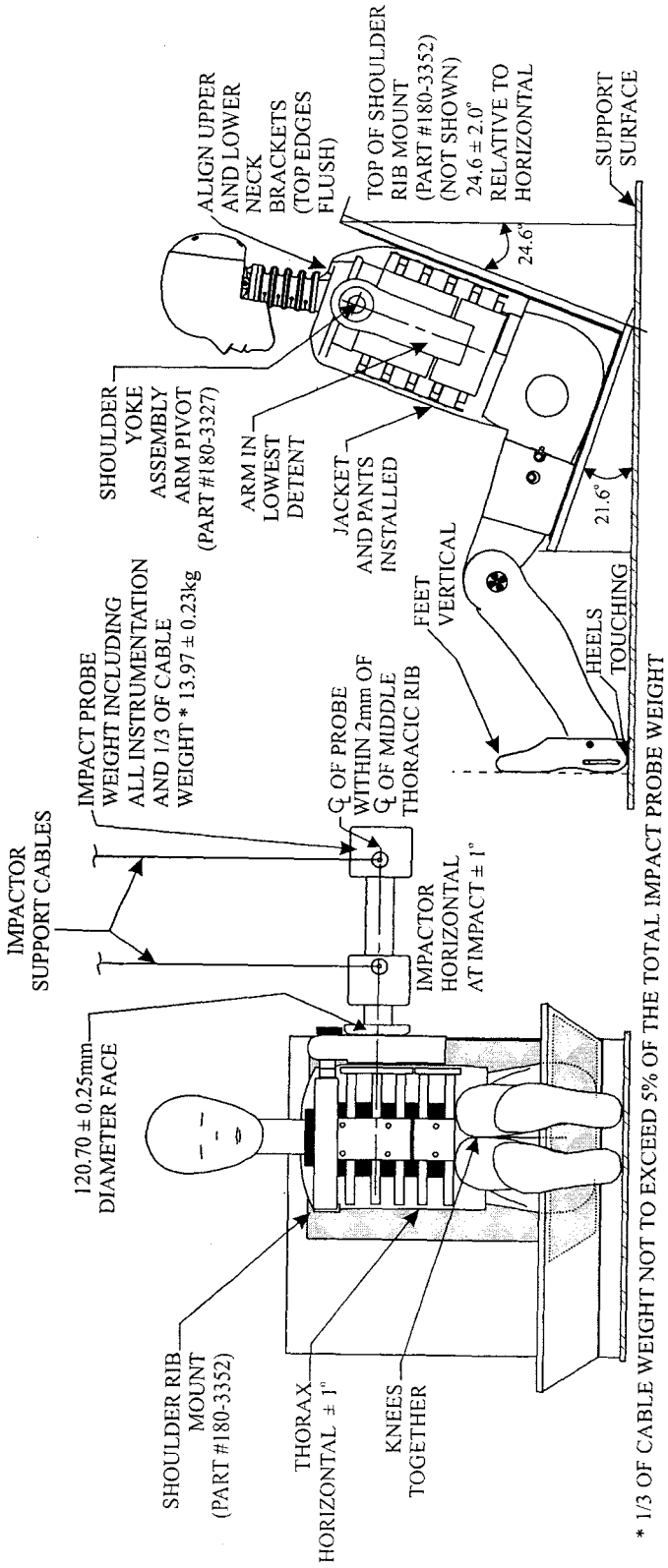

FIGURE V4
CERTIFICATION BENCH

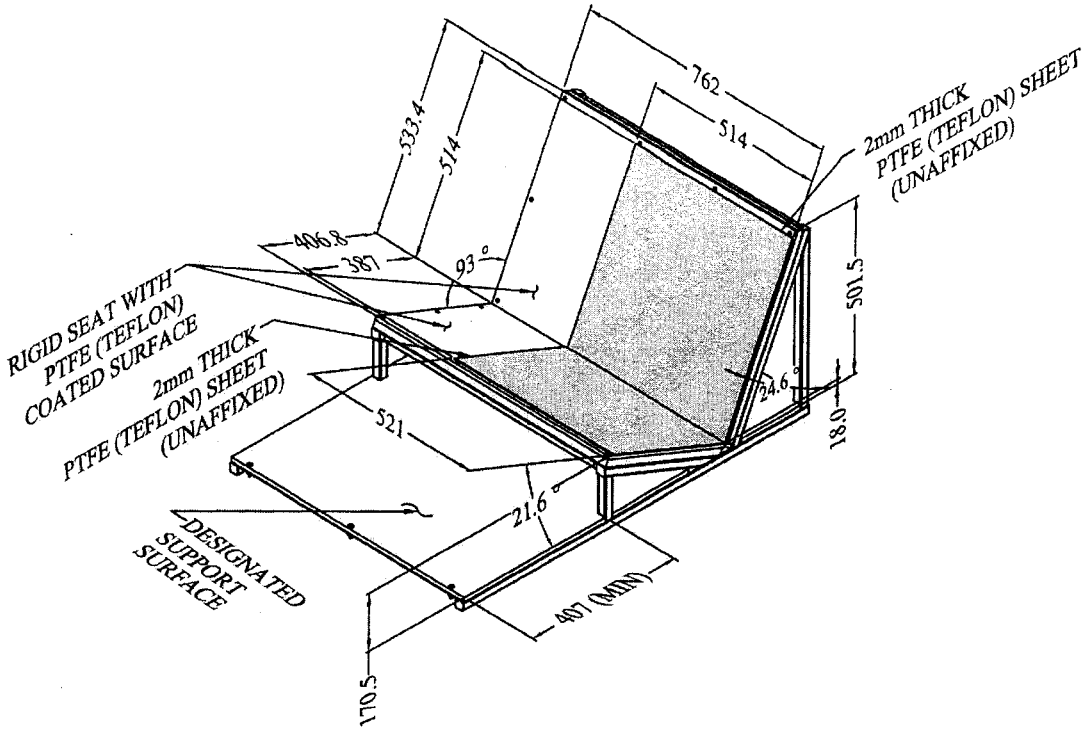

Figure V5
THORAX WITHOUT ARM IMPACT

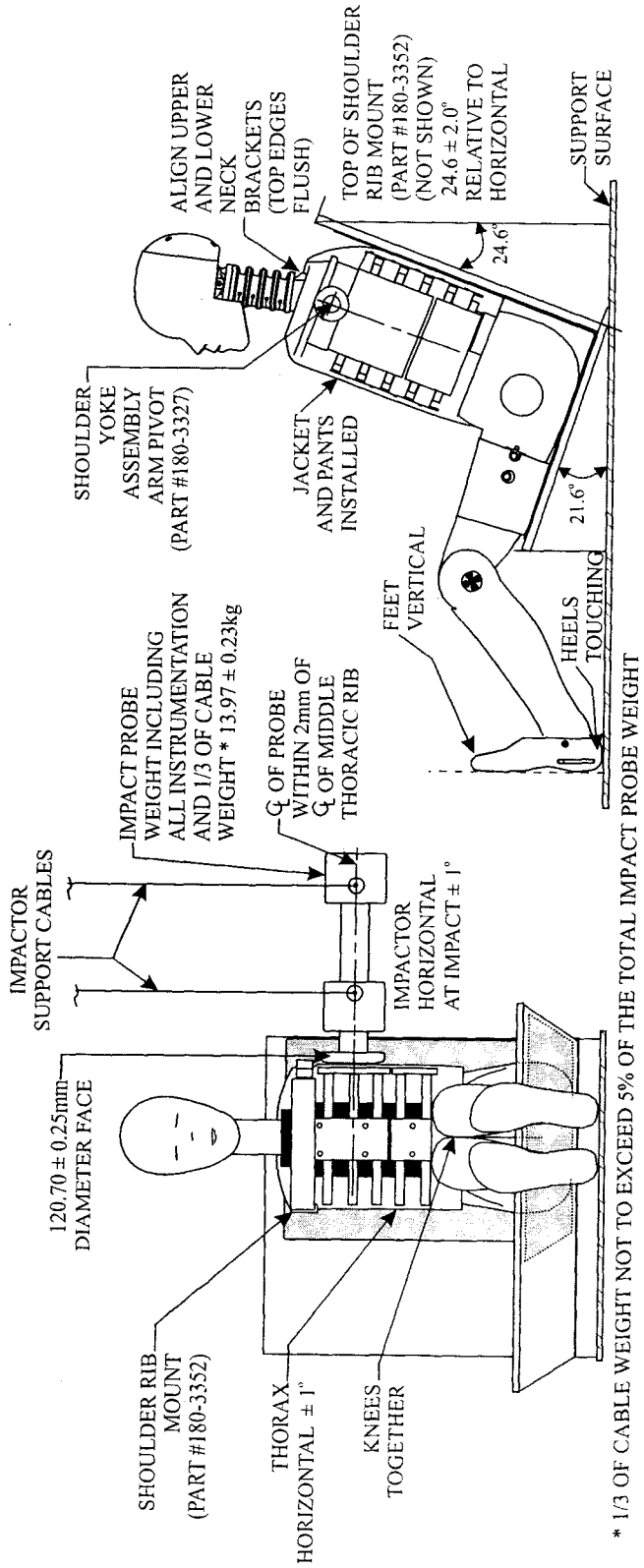

Figure V6
ABDOMEN IMPACT

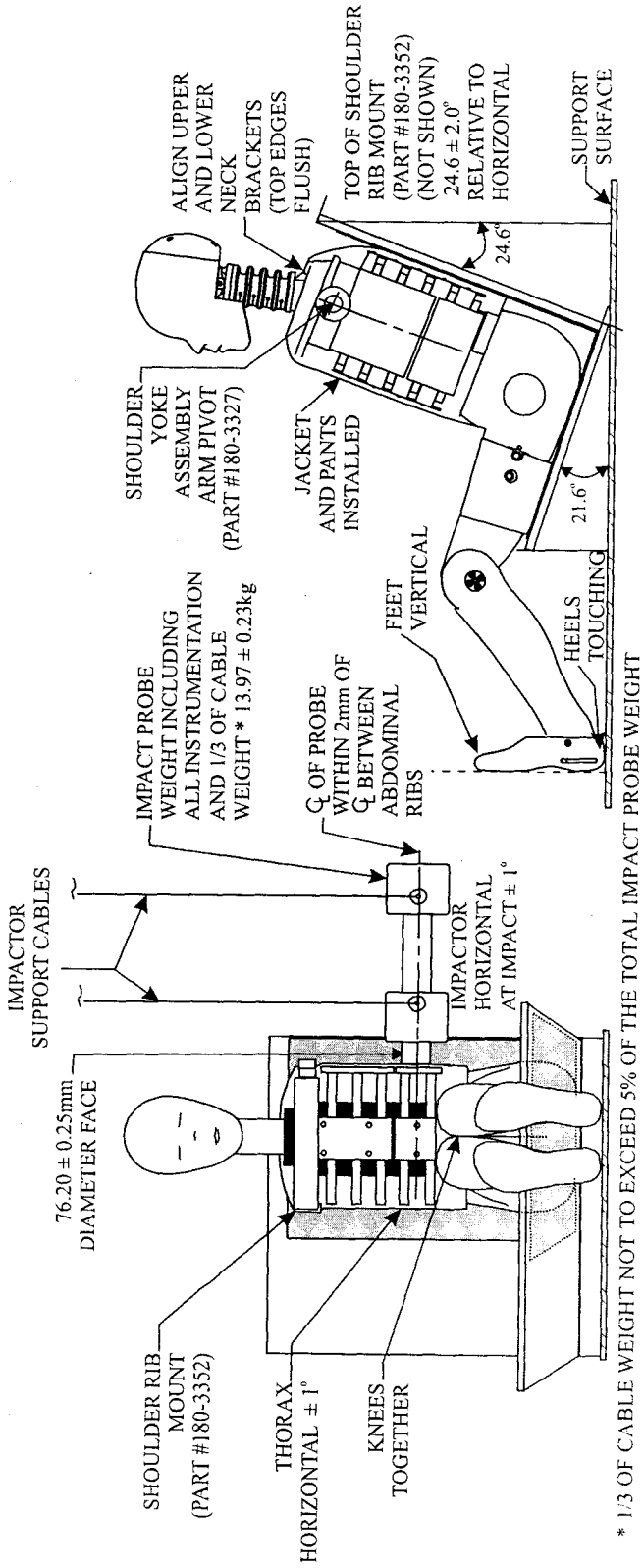

Figure V7
PELVIS IMPACT

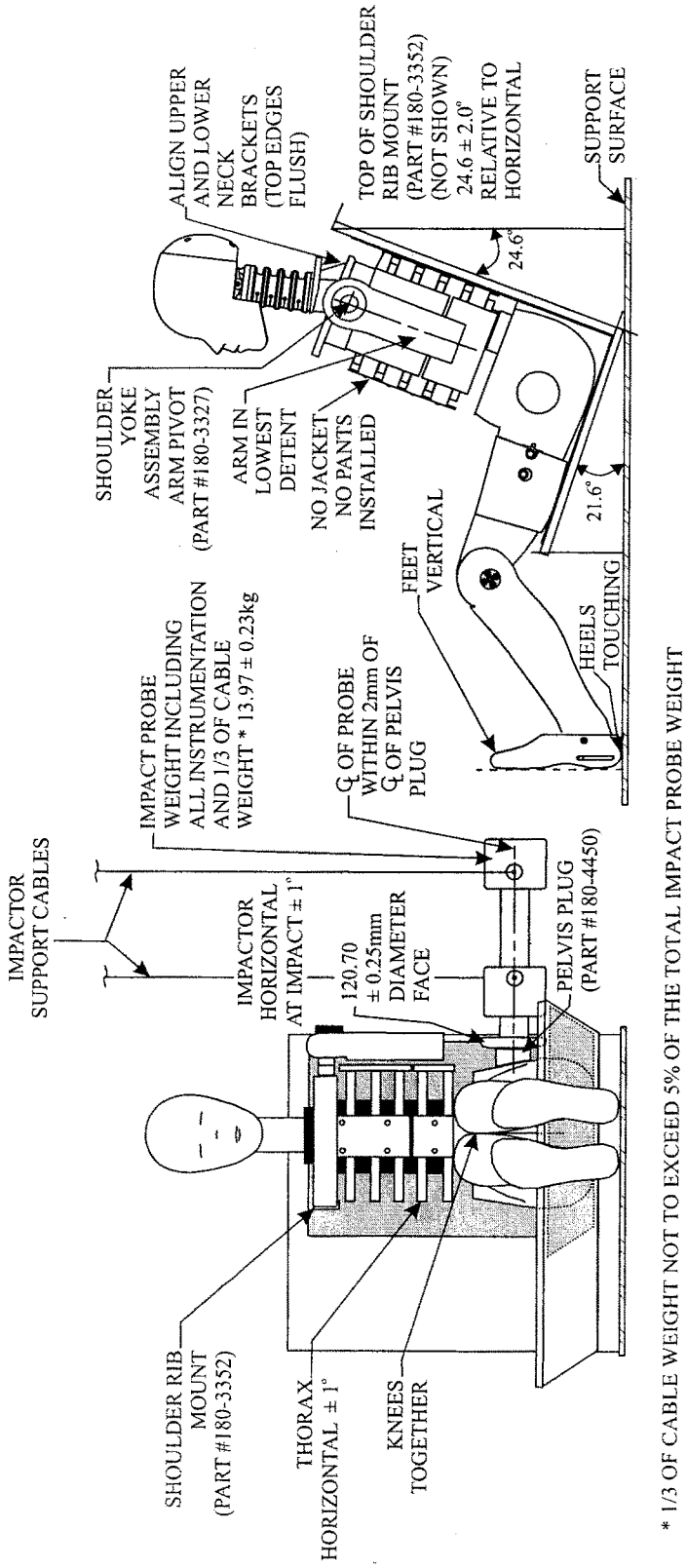

Issued November 30, 2004.

Stephen R. Kratzke,

Associate Administrator for Rulemaking.

[FR Doc. 04–26753 Filed 12–7–04; 8:45 am]

BILLING CODE 4910–59–C

DEPARTMENT OF THE INTERIOR

Fish and Wildlife Service

50 CFR Part 17

RIN 1018–AI78

Endangered and Threatened Wildlife and Plants; Notice of Availability of Draft Economic Analysis and Reopening of the Public Comment Period for the Proposed Designation of Critical Habitat for *Astragalus jaegerianus* (Lane Mountain Milk-vetch)

AGENCY: Fish and Wildlife Service, Interior.

ACTION: Proposed rule; notice of availability of draft economic analysis and reopening of public comment period.

SUMMARY: We, the U.S. Fish and Wildlife Service (Service), announce the availability of a draft economic analysis for the proposed designation of critical habitat for *Astragalus jaegerianus* (Lane Mountain milk-vetch) under the Endangered Species Act of 1973, as amended (Act). We are also reopening the public comment period for the proposal to designate critical habitat for this species to allow all interested parties to comment on the proposed rule and the associated draft economic analysis. Comments previously submitted on the proposed rule need not be resubmitted as they have been incorporated into the public record as part of this reopening of the comment period, and will be fully considered in preparation of the final rule.

DATES: We will accept all comments and information received on or before January 7, 2005. Any comments that we receive after the closing date may not be considered in the final decision on this proposal.

ADDRESSES: If you wish to comment, you may submit your comments and materials concerning this proposed rule by any one of several methods:

(1) You may submit written comments and information to the Field Supervisor, U.S. Fish and Wildlife Service, Ventura Fish and Wildlife Office, 2493 Portola Road, Suite B, Ventura, California 93003, or by facsimile 805/644–3958.

(2) You may hand-deliver written comments to our office, at the address given above.

(3) You may send comments by electronic mail (e-mail) to: *fw1Lanemv@r1.fws.gov.* Please see the Public Comments Solicited section below for file format and other information about electronic filing. In the event that our Internet connection is not functional, please submit your comments by the alternate methods mentioned above.

Comments and materials received, as well as supporting documentation used in preparation of the proposed critical habitat rule, will be available for public inspection, by appointment, during normal business hours at the above address. You may obtain copies of the draft economic analysis for *Astragalus jaegerianus* by contacting the Ventura Fish and Wildlife Office at the above address. The draft economic analysis and the proposed rule for critical habitat designation are also available on the Internet at *http://ventura.fws.gov/.* In the event that our Internet connection is not functional, please obtain copies of documents directly from the Ventura Fish and Wildlife Office.

FOR FURTHER INFORMATION CONTACT: Connie Rutherford, Ventura Fish and Wildlife Office, at the address listed above (telephone 805/644–1766; facsimile 805/644–3958).

SUPPLEMENTARY INFORMATION:

Public Comments Solicited

We intend any final action resulting from this proposal to be as accurate and as effective as possible. Therefore, we solicit comments or suggestions from the public, other concerned governmental agencies, the scientific community, industry, or any other interested party concerning the economic analysis or the proposed rule to designate critical habitat for *Astragalus jaegerianus* (69 FR 18018, April 6, 2004). We particularly seek comments concerning:

(1) The reasons why any habitat should or should not be determined to be critical habitat as provided by section 4 of the Act, including whether the benefits of exclusion outweigh the benefits of specifying such area as part of the critical habitat;

(2) Specific information on the amount and distribution of *Astragalus jaegerianus* habitat, and what habitat is essential to the conservation of this species and why;

(3) Land use designations and current or planned activities in the subject area and their possible impacts on proposed habitat;

(4) Any foreseeable economic, national security, or other potential impacts resulting from the proposed designation of critical habitat; in particular, any impacts on small entities or families;

(5) Whether the economic analysis identifies all State and local costs attributable to the proposed critical habitat designation. If not, what costs are overlooked;

(6) Whether the economic analysis makes appropriate assumptions regarding current practices and likely regulatory changes imposed as a result of the designation of critical habitat;

(7) Whether the economic analysis correctly assesses the effect on regional costs associated with land use controls that derive from the designation;

(8) Whether the designation will result in disproportionate economic impacts to specific areas that should be evaluated for possible exclusion from the final designation;

(9) Whether the economic analysis appropriately identifies all costs that could result from the designation; and

(10) Whether our approach to critical habitat designation could be improved or modified in any way to provide for greater public participation and understanding, or to assist us in accommodating public concern and comments.

All comments and information submitted during the initial comment period on the proposed rule need not be resubmitted. If you wish to comment, you may submit your comments and materials concerning the draft economic analysis and proposed rule by any one of several methods (*see* **ADDRESSES** section).

Please submit Internet comments to *fw1Lanemv@r1.fws.gov* in an ASCII file format and avoid the use of special characters and encryption. Please also include ''Attn: Lane Mountain Milk-vetch Critical Habitat'' in your e-mail subject header, and your name and return address in the body of your message. If you do not receive a confirmation from the system that we have received your Internet message, contact us directly by calling our Ventura Fish and Wildlife Office (*see* **FOR FURTHER INFORMATION CONTACT** section).

Our practice is to make comments, including names and home addresses of respondents, available for public review during regular business hours. Individual respondents may request that we withhold their home addresses from the rulemaking record, which we will honor to the extent allowable by law. There also may be circumstances in which we would withhold from the rulemaking record a respondent's identity, as allowable by law. If you wish for us to withhold your name and/

or address, you must state this prominently at the beginning of your comment. However, we will not consider anonymous comments. We will make all submissions from organizations or businesses, and from individuals identifying themselves as representatives or officials of organizations or businesses, available for public inspection in their entirety.

Comments and materials received, as well as supporting documentation used in preparation of the proposal to designate critical habitat, will be available for inspection, by appointment, during normal business hours, in our Ventura Fish and Wildlife Office at the above address.

Background

Astragalus jaegerianus (Lane Mountain milk-vetch) is a member of the pea family (Fabaceae) that is restricted in its range to a portion of the west Mojave Desert north of Barstow, in San Bernardino County, CA. It is a wispy perennial herb with cream-to-purple flowers, whose zig zag stems grow up through low desert shrubs, referred to as host shrubs, that provide it with support. The stems wither at the end of each growing season, and the plant overwinters as a taproot. The visibility of populations can fluctuate dramatically from year to year, depending on climatic conditions. In favorable years, seed production may be substantial. In unfavorable years, the plants may desiccate prior to flowering or setting seed, or the taproots may remain dormant and not resprout.

Populations of *Astragalus jaegerianus* are concentrated in four geographically distinct areas that are arrayed more or less linearly along a 20 mile (32 kilometer) long axis that trends in a northeasterly-to-southwesterly direction. The Goldstone and Brinkman Wash-Montana Mine populations occur entirely on Department of Defense (Army) lands at Fort Irwin. The Paradise Wash population occurs primarily on Army lands, with a portion on Federal lands administered by the Bureau of Land Management (BLM). The Coolgardie population occurs primarily on BLM-managed lands, with a portion on small privately owned parcels scattered between the Federal lands.

We listed *Astragalus jaegerianus* as threatened on October 6, 1998 (63 FR 53596) due to threats of increasing habitat loss and degradation. The primary threat is loss of individuals and habitat due to proposed military training activities. Other potential threats include recreational mining, off-highway vehicle use, and alteration in habitat from the encroachment of nonnative species.

On April 6, 2004, we published a proposed rule in the **Federal Register** (69 FR 18018) to designate critical habitat for *Astragalus jaegerianus.* We proposed to designate approximately 29,522 acres (ac) (11,947 hectares (ha)) of critical habitat in San Bernardino County, CA. The first comment period on the proposed critical habitat rule for *Astragalus jaegerianus* closed on May 21, 2004.

Critical habitat identifies specific areas, both occupied and unoccupied, that are essential to the conservation of a listed species and that may require special management considerations or protection. If the proposed rule is made final, section 7 of the Act will prohibit destruction or adverse modification of critical habitat by any activity funded, authorized, or carried out by any Federal agency. Federal agencies proposing actions affecting areas designated as critical habitat must consult with us on the effects of their proposed actions, pursuant to section 7(a)(2) of the Act. We note, however, that a recent 9th Circuit judicial opinion, *Gifford Pinchot Task Force* v. *United State Fish and Wildlife Service,* has invalidated the Service's regulation defining destruction or adverse modification of critical habitat. We are currently reviewing the decision to determine what effect it (and to a limited extent *Center for Biological Diversity* v. *Bureau of Land Management* (Case No. C–03–2509–SI, N.D. Cal.)) may have on the outcome of consultations pursuant to Section 7 of the Act.

Section 4 of the Act requires that we consider economic and other relevant impacts prior to making a final decision on what areas to designate as critical habitat. We have prepared a draft economic analysis for the proposal to designate certain areas as critical habitat for *Astragalus jaegerianus.* This analysis considers the potential economic effects of designating critical habitat for *A. jaegerianus.* It also considers the economic effects of protective measures taken as a result of other Federal, State, and local laws that aid habitat conservation in areas proposed for designation.

Approximately 52 percent of the lands within the proposed designation of critical habitat for *Astragalus jaegerianus* occur on Army lands at Fort Irwin, and 32 percent of the lands occur on BLM lands. Less than 1 percent of the lands proposed are State lands, and approximately 15 percent of the lands proposed are on privately owned parcels interspersed with BLM lands. We know of no Tribal lands within these boundaries of proposed critical habitat.

The economic analysis addresses the impacts of *Astragalus jaegerianus* conservation efforts on activities occurring on lands proposed for designation. The analysis measures lost economic efficiency associated with mining and off-highway vehicle recreation, as well as potential uncertainty to landowners and project delay.

The economic analysis includes both pre-designation and post-designation economic costs to various entities as a result of *Astragalus jaegerianus* conservation activities. Pre-designation costs are those costs estimated to have occurred from the time the species was listed until the proposal of critical habitat. The estimated pre-designation costs range from $1.58 million to $2.1 million. These costs are associated primarily with two major conservation efforts: those taken by the Army to plan for and implement conservation actions at Fort Irwin, and those taken by the BLM to plan for, and implement, conservation actions within the framework of the West Mojave Plan, a multiple species habitat conservation plan and amendment to the California Desert Conservation Area Plan.

The total post-designation costs are expected to range from $5.84 million to $13.01 million. These costs are associated primarily with land acquisition, land management activities, and project-related surveys and monitoring associated with conservation of *Astragalus jaegerianus* over a 20-year time period.

With respect to the Army lands at Fort Irwin, the analysis only focuses on the direct costs associated with *Astragalus jaegerianus* conservation, and does not attempt to quantify the potential impacts to military readiness, if any, that may result from critical habitat designation.

Author

The primary author of this notice is Connie Rutherford, Ventura Fish and Wildlife Office (*see* **ADDRESSES** section).

The authority for this action is the Endangered Species Act of 1973 (16 U.S.C. 1531 *et seq.*).

Dated: December 1, 2004.

Craig Manson,

Assistant Secretary for Fish and Wildlife and Parks.

[FR Doc. 04–26876 Filed 12–7–04; 8:45 am]

BILLING CODE 4310–55–P

DEPARTMENT OF COMMERCE

National Oceanic and Atmospheric Administration

50 CFR Part 660

[Docket No. 041130335–4335–01; I.D. 112404B]

RIN 0648–AS17

Fisheries Off West Coast States and in the Western Pacific; Coastal Pelagic Species Fisheries; Annual Specifications

AGENCY: National Marine Fisheries Service (NMFS), National Oceanic and Atmospheric Administration (NOAA), Commerce.

ACTION: Proposed rule.

SUMMARY: NMFS proposes a regulation to implement the annual harvest guideline for Pacific sardine in the U.S. exclusive economic zone (EEZ) off the Pacific coast for the fishing season January 1, 2005, through December 31, 2005. This harvest guideline has been calculated according to the regulations implementing the Coastal Pelagic Species (CPS) Fishery Management Plan (FMP) and establishes allowable harvest levels for Pacific sardine off the Pacific coast.

DATES: Comments must be received by December 23, 2004.

ADDRESSES: You may submit comments on this proposed rule, identified by [I.D. 112404B] by any of the following methods:

- E-mail: *0648–AS17.SWR@noaa.gov*. Include the I.D. number in the subject line of the message.
- Federal e-Rulemaking portal: *http://www.regulations.gov*. Following the instructions for submitting comments.
- Mail: Rodney R. McInnis, Regional Administrator, Southwest Region, NMFS, 501 West Ocean Blvd., Suite 4200, Long Beach, CA 90802–4213.
- Fax: (562) 980–4047.

Copies of the report *Assessment of Pacific Sardine Stock for U.S. Management in 2005* and the Regulatory Impact Review may be obtained from the Southwest Regional Office (see **ADDRESSES**).

FOR FURTHER INFORMATION CONTACT: Tonya L. Wick, Southwest Region, NMFS, (562) 980–4036.

SUPPLEMENTARY INFORMATION: The FMP, which was implemented by publication of the final rule in the **Federal Register** on December 15, 1999 (64 FR 69888), divides management unit species into two categories: actively managed and monitored. Harvest guidelines for actively managed species (Pacific sardine and Pacific mackerel) are based on formulas applied to current biomass estimates. Biomass estimates are not calculated for species that are only monitored (jack mackerel, northern anchovy, and market squid).

At a public meeting each year, the biomass for each actively managed species is reviewed by the Pacific Fishery Management Council's (Council) Coastal Pelagic Species Management Team (Team). The biomass, harvest guideline, and status of the fisheries are then reviewed at a public meeting of the Council's CPS Advisory Subpanel (Subpanel). This information is also reviewed by the Council's Scientific and Statistical Committee (SSC). The Council reviews reports from the Team, Subpanel, and SSC and, after providing time for public comment, makes its recommendation to NMFS. The annual harvest guideline and season structure are published by NMFS in the **Federal Register** as soon as practicable before the beginning of the appropriate fishing season. The Pacific sardine season begins on January 1 and ends on December 31 of each year.

Public meetings of the Team and Subpanel were held at the Southwest Regional Office in Long Beach, CA, on September 28, 29, and 30, 2004 (69 FR 55144, September 13, 2004). The Council reviewed the report at its November meeting in Portland, OR, and listened to comments from its advisory bodies and the public. The Council then adopted the 2005 harvest guideline for Pacific sardine.

Based on a biomass estimate of 1,193,515 metric tons (mt), the harvest guideline for Pacific sardine for January 1, 2005, through December 31, 2005, is 136,179 mt. The biomass estimate is 102,928 mt higher (approximately 10 percent higher) than last year's estimate.

The harvest guideline is allocated one-third for Subarea A, which is north of 39° 00′ N. lat. (Pt. Arena, CA) to the Canadian border, and two-thirds for Subarea B, which is south of 39° 00′ N. lat. to the Mexican border. Under this proposed rule, the northern allocation for 2004 would be 45,393 mt; the southern allocation would be 90,786 mt. In 2004, the northern allocation was 40,916 mt and the southern allocation was 81,831 mt.

Normally, an incidental landing allowance of sardine in landings of other CPS is set at the beginning of the fishing season. The incidental allowance would become effective if the harvest guideline is reached and the fishery closed. A landing allowance of sardine up to 45 percent by weight of any landing of CPS is authorized by the FMP. An incidental allowance prevents fishermen from being cited for a violation when sardine occur in schools of other CPS, and it minimizes bycatch of sardine if sardine are inadvertently caught while fishing for other CPS. Sardine landed with other species also requires sorting at the processing plant, which adds to processing costs. Mixed species in the same load may damage smaller fish. The size of the sardine population was estimated using a newly modified version of the integrated stock assessment model called Age-structured Assessment Program (ASAP). Using this new ASAP model was recommended by the Coastal Pelagic Species Stock Assessment Review panel held in June 2004 in La Jolla, CA. This new ASAP model replaces the old Catch-at-Age-Analysis of Sardine-Two Area Model (CANSAR-TAM, a forward-casting, age-structured analysis) used in previous years. ASAP is a flexible forward-simulation that allows for the efficient and reliable estimation of a large number of parameters. ASAP uses fishery dependent and fishery independent data to obtain annual estimates of sardine abundance, year-class strength, and age-specific fishing mortality for 1983 through 2004. The ASAP model allows one to account for the expansion of the Pacific sardine stock northward to include waters off the northwest Pacific coast and for the incorporation of data from the Mexican sardine fishery. Information on the fishery and the stock assessment are found in the report *Assessment of Pacific Sardine Stock for U.S. Management in 2005* (see **ADDRESSES**).

The formula in the FMP uses the following factors to determine the harvest guideline:

1. *The biomass of age one sardine and above*. For 2005, this estimate is 1,193,515 mt.

2. *The cutoff*. This is the biomass level below which no commercial fishery is allowed. The FMP established this level at 150,000 mt.

3. *The portion of the sardine biomass that is in U.S. waters*. For 2005, this estimate is 87 percent, based on the average of larval distribution obtained from scientific cruises and the distribution of the resource obtained from logbooks of aerial fish-spotters.

4. *The harvest fraction*. This is the percentage of the biomass above 150,000 mt that may be harvested. The fraction used varies (5–15 percent) with current ocean temperatures. A higher fraction is used for warmer ocean temperatures, which favor the production of Pacific sardine, and a lower fraction is used for cooler temperatures. For 2005, the

fraction was 15 percent based on three seasons of sea surface temperature at Scripps Pier, California.

Based on the estimated biomass of 1,193,515 mt and the formula in the FMP, a harvest guideline of 136,179 mt was determined for the fishery beginning January 1, 2005. The harvest guideline is allocated one-third for Subarea A, which is north of 39° 00′ N. lat. (Pt. Arena, CA) to the Canadian border, and two-thirds for Subarea B, which is south of 39° 00′ N. lat. to the Mexican border. The northern allocation is 45,393 mt; the southern allocation is 90,786 mt.

Classification

These proposed specifications are issued under the authority of, and NMFS has preliminarily determined that it is in accordance with, the Magnuson-Stevens Fishery Conservation and Management Act, the FMP, and the regulations implementing the FMP at 50 CFR part 660, subpart I.

This proposed rule is exempt from review under Executive Order 12866.

The Chief Counsel for Regulation of the Department of Commerce certified to the Chief Counsel for Advocacy of the Small Business Administration that this proposed rule, if adopted, would not have a significant economic impact on a substantial number of small entities as follows:

The purpose of the proposed rule is to inform the public of the 2005 harvest guideline for Pacific sardine in the EEZ off the Pacific coast. The CPS FMP and its implementing regulations require NMFS to set an annual harvest guideline for Pacific sardine based on the formula in the FMP. The harvest guideline is derived by a formula applied to the current biomass estimate. The formula leaves little latitude for discretion except when errors are found in the calculations or in the data then those adjustments may be made. There is no alternative to the harvest guideline as specified; there is no discretion to use an adjusted formula. Further, there is only one stock assessment method available to establish the adult biomass used to derive the harvest guideline. No changes are proposed in the regulations governing the fishery.

The proposed harvest guideline for the 2005 fishing season is 136,179 mt, which is approximately 10 percent higher than that of the 2004 harvest guideline which could result in increased revenue to the fleet. Whether this occurs depends on market forces and the ability of the fishing fleet to find pure schools of Pacific sardine. If the fleet were to take the full harvest guideline, and assuming no change in average exvessel price from the current level, the total revenue to the fleet would be $15 million. However, even if there is no change in market conditions, it is not likely that the full harvest guideline will be taken in the 2005 fishing year (because of the availability of the fleet to find pure schools of Pacific sardine), in which case total revenue would likely be lower. The Pacific sardine season begins on January 1, 2005, and ends on December 31, 2005, or when the harvest guideline is caught and the fishery is closed.

The harvest guideline would apply to the CPS purse seine fleet, which consists of 62 small vessels fishing under a limited entry program within U.S. waters. They have been actively regulated since the year 2000 without difficulty. The limited entry program was initiated because before 2000 the fleet was overcapitalized characterized by excessive harvest capacity for current biomass conditions. As a fishery becomes overcapitalized, economic efficiency is reduced and pressure to over harvest stocks increases. Setting the Pacific sardine harvest guideline under the limited entry program may affect the CPS vessels but will affect them less than if there were no limited entry program. Specifically that overcapitalization would be a greater risk (economic efficiency is reduced, pressure to over harvest stocks increases, and other serious biological [resource depletion] and practical problems [short seasons, wastage, dangerous fishing practices] are typical of open access conditions) to their income than that of setting a harvest guideline under the limited entry program. These vessels fish for small pelagic fish (Pacific sardine, Pacific mackerel) all year and for market squid in the winter, and may harvest tuna in the U.S. exclusive economic zone seasonally when they are available, usually late in the summer and early fall. These vessels are considered small business entities. There should not be any significant economic impact to a substantial number of these small entities.

As a result, a regulatory flexibility analysis is not required and none has been prepared.

Authority: 16 U.S.C. 1801 *et seq.*

Dated: December 2, 2004.

William T. Hogarth,

Assistant Administrator for Fisheries, National Marine Fisheries Service.

[FR Doc. 04–26953 Filed 12–7–04; 8:45 am]

BILLING CODE 3510–22–S

DEPARTMENT OF COMMERCE

National Oceanic and Atmospheric Administration

50 CFR Part 679

[Docket No. 041126332–4332–01; I.D. 112204A]

Fisheries of the Exclusive Economic Zone off Alaska; Bering Sea and Aleutian Islands; 2005 and 2006 Proposed Harvest Specifications for Groundfish

AGENCY: National Marine Fisheries Service (NMFS), National Oceanic and Atmospheric Administration (NOAA), Commerce.

ACTION: 2005 and 2006 proposed harvest specifications for groundfish; request for comments.

SUMMARY: NMFS proposes 2005 and 2006 harvest specifications and prohibited species catch (PSC) allowances for the groundfish fishery of the Bering Sea and Aleutian Islands management area (BSAI). This action is necessary to establish harvest limits for groundfish during the 2005 and 2006 fishing years and to accomplish the goals and objectives of the Fishery Management Plan for Groundfish of the Bering Sea and Aleutian Islands Management Area (FMP). The intended effect of this action is to conserve and manage the groundfish resources in the BSAI in accordance with the Magnuson-Stevens Fishery Conservation and Management Act (Magnuson-Stevens Act).

DATES: Comments must be received by January 7, 2005.

ADDRESSES: Send comments to Sue Salveson, Assistant Regional Administrator, Sustainable Fisheries Division, Alaska Region, NMFS, Attn: Lori Durall. Comments may be submitted by:

- Mail to P.O. Box 21668, Juneau, AK 99802;
- Hand Delivery to the Federal Building, 709 West 9th Street, Room 420A, Juneau, AK;
- E-mail to *2005AKgroundfish.tacspecs@noaa.gov* and include in the subject line of the e-mail comments the document identifier: 2005 Proposed Specifications (E-mail comments, with or without attachments, are limited to 5 megabytes);
- FAX to 907–586–7557; or
- Webform at the Federal eRulemaking Portal: *www.regulations.gov*. Follow the instructions at that site for submitting comments.

Copies of the draft Environmental Assessment/Initial Regulatory Flexibility Analysis (EA/IRFA) prepared for this action are available from NMFS at the addresses above or from the Alaska Region website at *www.fakr.noaa.gov*. Copies of the final 2003 Stock Assessment and Fishery Evaluation (SAFE) report for the groundfish resources of the BSAI, dated November 2003, are available from the North Pacific Fishery Management Council (Council), West 4th Avenue, Suite 306, Anchorage, AK 99510–2252 (907–271–2809), or from its website at *www.fakr.noaa.gov/npfmc*.

FOR FURTHER INFORMATION CONTACT: Mary Furuness, 907–586–7228, or e-mail at *mary.furuness@noaa.gov*.

SUPPLEMENTARY INFORMATION:

Background

Federal regulations at 50 CFR part 679 implement the FMP and govern the groundfish fisheries in the BSAI. The Council prepared the FMP and NMFS approved it under the Magnuson-Stevens Act. General regulations governing U.S. fisheries also appear at 50 CFR part 600.

The FMP and its implementing regulations require NMFS, after consultation with the Council, to specify annually the total allowable catch (TAC) for each target species and the ''other species'' category, the sum of which must be within the optimum yield range of 1.4 million to 2.0 million metric tons (mt) (see § 679.20(a)(1)(i)). Regulations at § 679.20(c)(1) further require NMFS to solicit public comment on proposed annual TACs and apportionments thereof, PSC allowances and prohibited species quota (PSQ) reserves established by § 679.21, seasonal allowances of pollock, Pacific cod and Atka mackerel TAC, including pollock Community Development Quota (CDQ), and CDQ reserve amounts established by § 679.20(b)(1)(iii) and to publish proposed harvest specifications in the **Federal Register**. The proposed harvest specifications set forth in Tables 1 through 13 of this action satisfy these requirements.

Under § 679.20(c)(3), NMFS will publish the final annual specifications for 2005 and 2006 after (1) considering comments received within the comment period (see **DATES**), (2) consulting with the Council at its next meeting beginning the week of December 6, 2004, and (3) considering new information presented in the EA and the final 2004 SAFE reports prepared for the 2005 and 2006 groundfish fisheries.

With some exceptions, regulations at § 679.20(c)(2)(ii) require that one-fourth of each proposed initial TAC (ITAC) amount and apportionment thereof, one-fourth of each CDQ reserve established under § 679.20(b)(1)(iii), and one-fourth of each proposed PSC allowance established under § 679.21 become available at 0001 hours, Alaska local time (A.l.t.), January 1, on an interim basis and remain in effect until superseded by the final harvest specifications. Regulations at § 679.20(c)(2)(ii)(A) and (B) require that the proposed first seasonal allowance of non-CDQ and CDQ pollock, Pacific cod, and Atka mackerel becomes available at 0001 hours, A.l.t., January 1, on an interim basis and remains in effect until superseded by the final harvest specifications. Regulations at § 679.20(c)(2)(ii) do not provide for an interim harvest specification for either the hook-and-line and pot gear sablefish CDQ reserve or for sablefish managed under the Individual Fishing Quota (IFQ) program. Interim harvest specifications and apportionments thereof for the 2005 fishing year will be published in a separate **Federal Register** notice.

Other Rules Affecting the 2005 and 2006 Harvest Specifications

Amendments 48/48 to the FMP and to the Fishery Management Plan for Groundfish of the Gulf of Alaska (GOA) were unanimously recommended by the Council in October 2003 and approved by NMFS on October 12, 2004. The final rule implementing Amendments 48/48 was published November 8, 2004, (69 FR 64683). Amendments 48/48 revise the administrative process used to establish annual specifications for the groundfish fisheries of the GOA and the BSAI. The goals of Amendments 48/48 in revising the harvest specifications process are to (1) manage fisheries based on the best scientific information available, (2) provide for adequate prior public review and comment on Council recommendations, (3) provide for additional opportunity for Secretarial review, (4) minimize unnecessary disruption to fisheries and public confusion, and (5) promote administrative efficiency.

Based on the approval of Amendments 48/48, the Council recommended 2005 and 2006 proposed harvest specifications for BSAI groundfish. These proposed harvest specifications are based on the 2003 SAFE report. In November 2004, the 2004 SAFE report will be used to develop the final 2005 and 2006 groundfish acceptable biological catch amounts (ABC). When possible, this proposed rule will identify any proposal that may be anticipated to change in the final specifications. The 2006 harvest specification will be updated in early 2006, when final harvest specifications for 2006 and new harvest specification for 2007 are implemented.

In June 2004, the Council adopted Amendment 82 to the FMP. This amendment would establish a framework for management of the Aleutian Islands (AI) directed pollock fishery. If approved by NMFS, this amendment would be implemented after the commencement of the 2005 fishing year. Section 803 of the Consolidated Appropriations Act of 2004 (CAA), Pub. L. No. 108–199, requires the AI directed pollock fishery to be allocated to the Aleut Corporation for economic development of Adak, Alaska. Prior to the CAA, the AI directed pollock fishery was managed pursuant to the American Fisheries Act (AFA), Pub. L. No. 105–277, Title II of Division C. The AFA allocated the AI directed pollock fishery to specific harvesters and processors named in the AFA. The CAA supersedes that portion of the AFA. Together, the CAA and the AFA effectively allocate the AI directed pollock fishery to the Aleut Corporation after subtraction of the CDQ directed fishing allowance and incidental catch allowance (ICA) from the pollock TAC. The implementation of section 803 of the CAA requires amending AFA provisions in the FMP and in the regulations at 50 CFR part 679. This would be accomplished by Amendment 82, if it is approved.

Until a decision is made on whether to approve Amendment 82, NMFS will prohibit the non-CDQ AI directed pollock fishery in the interim and final harvest specifications for 2005 and 2006 based on the statutory language of section 803 of the CAA. The AI pollock TAC recommended by the Council under the provisions of proposed Amendment 82 will be included in the 2005 and 2006 proposed, interim, and final harvest specifications to allow the Administrator, Alaska Region, NMFS (Regional Administrator), to open the AI directed pollock fishery if and when the regulations for Amendment 82 are effective. As stated above, this prohibition is authorized by section 803 of the CAA, which requires that only those who are selected by the Aleut Corporation and approved by NMFS may participate in the non-CDQ AI directed pollock fishery. For additional information, see the November 16, 2004, notice of availability (69 FR 67107) and the December 7, 2004, proposed rule for Amendment 82.

The Council recommended an upper limit for the AI pollock TAC equal to 19,000 mt, except that when the AI pollock ABC is less than 19,000 mt, AI pollock TAC shall be no more than 40 percent of the Allowable Biological Catch (ABC). The directed pollock fishery allocation to the Aleut Corporation would be seasonally apportioned. The Council also adopted a chinook salmon bycatch limit for the AI directed pollock fishery. Tables 1 and 2 list the 2005 and 2006 proposed allocations and seasonal apportionments of the AI pollock TAC based on regulations that would implement Amendment 82, if it is approved.

Other actions that may affect the 2005 and 2006 harvest specifications are based on recommendations from the Council's Plan Team. The Council may consider apportionment of the Pacific

cod ABC or TAC by Bering Sea subarea and AI subarea separately instead of by the full BSAI management area. Also, the Council may consider separating some rockfish species from the ''other rockfish'' species category.

Proposed ABC and TAC Harvest Specifications

The proposed ABC levels are based on the best available biological and socioeconomic information, including projected biomass trends, information on assumed distribution of stock biomass, and revised technical methods used to calculate stock biomass. In general, the development of ABCs and overfishing levels (OFLs) involves sophisticated statistical analyses of fish populations and is based on a successive series of six levels, or tiers, of reliable information available to fishery scientists. Tier one represents the highest data quality and tier six the lowest level of data quality available.

The best information currently available is set forth in Appendix A to the final SAFE report for the 2004 BSAI groundfish fisheries dated November 2003 (see **ADDRESSES**). Information on the status of stocks will be updated with the 2004 survey results and reconsidered by the Plan Team in November 2004 for the 2004 SAFE report. The final harvest specifications will be based on the 2004 SAFE report.

In October 2004, the Scientific and Statistical Committee (SSC) and the Council reviewed the Plan Team's preliminary projections for 2004 biomass amounts, as presented in the 2003 SAFE report, as the basis for the 2005 and 2006 proposed ABC, OFL, and TAC amounts. Due to time constraints, the Council's Advisory Panel did not provide recommendations for the proposed harvest specifications. The SSC concurred with the Plan Team's recommendations, which estimate the 2005 and 2006 proposed ABCs and OFLs by using a projection of 2004 and 2005 groundfish harvest with the November 2003 SAFE report model projections of 2004 ABCs for groundfish stocks managed at tiers 1–3. The Council adopted the OFL and ABC amounts recommended by the SSC (Table 1), except for Atka mackerel. The Council recommended using the 2004 OFL and ABC amounts for Atka mackerel based on survey data that became available October 8, 2004, instead of using the projected amounts for 2005 and 2006. The Council recommended that the 2005 and 2006 proposed TACs be set equal to the 2004 TACs, except for minor decreases for sablefish and Pacific ocean perch and minor increases in 2005 for Pacific cod and rock sole based on preliminary data evaluated by the Plan Team. The Council also recommended an AI pollock TAC to support a directed pollock fishery, pending approval of Amendment 82. The Council recommended using the 2004 PSC allowances for the 2005 and 2006 proposed allowances. The Council will reconsider the OFL, ABC, TAC, and PSC amounts in December 2004 after the Plan Team incorporates new status of stocks information into a final 2004 SAFE report, for the 2005 and 2006 BSAI groundfish fishery. None of the Council's recommended proposed TACs for 2005 or 2006 exceed the recommended 2005 or 2006 proposed ABC for any species category. NMFS finds the Council's recommended proposed 2005 and 2006 OFLs, ABCs, and TACs are consistent with the best available information on the biological condition of the groundfish stocks.

Table 1 lists the 2005 and 2006 proposed OFL, ABC, and TAC, ITAC and CDQ amounts for groundfish in the BSAI. The proposed apportionment of TAC amounts among fisheries and seasons is discussed below.

TABLE 1—2005 AND 2006 PROPOSED OVERFISHING LEVEL (OFL), ACCEPTABLE BIOLOGICAL CATCH (ABC), TOTAL ALLOWABLE CATCH (TAC), INITIAL TAC (ITAC), AND CDQ RESERVE ALLOCATION OF GROUNDFISH IN THE BSAI[1]

[Amounts are in metric tons]

Species	Area	2005					2006				
		OFL	ABC	TAC	ITAC[2]	CDQ[3]	OFL	ABC	TAC	ITAC[2]	CDQ[3]
Pollock[4]	BS[2]	2,909,800	2,363,000	1,474,450	1,327,005	147,445	2,542,900	2,087,800	1,474,000	1,326,600	147,400
	AI[2]	52,600	39,400	19,000	17,100	1,900	52,600	39,400	19,000	17,100	1,900
	Bogoslof	39,600	2,570	50	50	.....	39,600	2,570	50	50	.....
Pacific cod	BSAI	352,500	225,500	215,952	183,559	16,196	344,700	220,500	215,500	183,175	16,163
Sablefish[5]	BS	3,432	2,418	2,418	1,028	332	3,184	2,244	2,244	954	84
	AI	3,960	2,790	2,790	592	471	3,674	2,589	2,589	550	49
Atka mackerel	BSAI	78,500	66,700	63,000	53,550	4,725	78,500	66,700	63,000	53,550	4,725
	WAI	.....	24,360	20,660	17,561	1,550	.....	24,360	20,660	17,561	1,550
	CAI	.....	31,100	31,100	26,435	2,333	.....	31,100	31,100	26,435	2,333
	EAI/BS	.....	11,240	11,240	9,554	843	.....	11,240	11,240	9,554	843
Yellowfin sole	BSAI	129,710	109,300	86,075	73,164	6,456	124,900	105,250	86,075	73,164	6,456
Rock sole	BSAI	153,290	128,370	41,450	35,233	3,109	136,240	114,060	41,000	34,850	3,075
Greenland turbot	BSAI	17,740	11,230	3,500	2,975	263	16,490	10,430	3,500	2,975	263
	BS	.....	7,524	2,700	2,295	203	.....	6,988	2,700	2,295	203
	AI	.....	3,706	800	680	60	.....	3,442	800	680	60
Arrowtooth flounder	BSAI	144,990	96,140	12,000	10,200	900	145,480	96,300	12,000	10,200	900
Flathead sole	BSAI	69,100	56,860	19,000	16,150	1,425	64,870	53,380	19,000	16,150	1,425
Other flatfish[6]	BSAI	18,100	13,500	3,000	2,550	225	18,100	13,500	3,000	2,550	225
Alaska plaice	BSAI	254,970	159,040	10,000	8,500	750	255,220	159,230	10,000	8,500	750
Pacific ocean perch	BSAI	15,790	12,020	12,020	10,217	902	15,990	12,170	12,170	10,345	913
	BS	.....	1,923	1,923	1,635	144	.....	1,947	1,947	1,655	146
	WAI	.....	4,655	4,655	3,957	349	.....	4,713	4,713	4,006	353
	CAI	.....	2,655	2,655	2,257	199	.....	2,689	2,689	2,286	202
	EAI	.....	2,787	2,787	2,369	209	.....	2,821	2,821	2,398	212
Northern	BSAI	7,900	6,030	5,000	4,250	375	7,670	5,850	5,000	4,250	375
Shortraker	BSAI	701	526	526	447	39	701	526	526	447	39
Rougheye	BSAI	259	195	195	166	15	259	195	195	166	15
Other rockfish[7]	BS	1,280	960	460	391	35	1,280	960	460	391	35
	AI	846	634	634	539	48	846	634	634	539	48
Squid	BSAI	2,620	1,970	1,275	1,084	.....	2,620	1,970	1,275	1,084	.....
Other species[8]	BSAI	81,150	46,810	27,205	23,124	2,040	81,150	46,810	27,205	23,124	2,040
TOTAL		4,338,838	3,345,963	2,000,000	1,771,874	187,651	3,936,974	3,043,068	1,998,423	1,770,714	186,881

[1]These amounts apply to the entire BSAI management area unless otherwise specified. With the exception of pollock, and for the purpose of these harvest specifications, the Bering Sea (BS) subarea includes the Bogoslof District.

[2]Except for pollock and the portion of the sablefish TAC allocated to hook-and-line and pot gear, 15 percent of each TAC is put into a reserve. The ITAC for each species is the remainder of the TAC after the subtraction of these reserves.

[3]Except for pollock, squid and the hook-and-line or pot gear allocation of sablefish, one half of the amount of the TACs placed in reserve, or 7.5 percent of the TACs, is designated as a CDQ reserve for use by CDQ participants (see §§ 679.20(b)(1)(iii) and 679.31).

[4]Under § 679.20(a)(5)(i)(A)(*1*), the annual Bering Sea pollock TAC after subtraction for the CDQ directed fishing allowance - 10 percent and the ICA - 3 percent, is further allocated by sector for a directed pollock fishery as follows: inshore - 50 percent; catcher/processor - 40 percent; and motherships - 10 percent. Pending approval of Amendment 82, the annual AI pollock TAC, after subtraction for the CDQ directed fishing allowance - 10 percent and the ICA - 2,000 mt, would be allocated to the Aleut Corporation for a directed pollock fishery.

[5]The ITAC for sablefish reflected in Table 1 is for trawl gear only. Regulations at § 679.20(b)(1) do not provide for the establishment of an ITAC for the hook-and-line and pot gear allocation for sablefish. Twenty percent of the sablefish TAC allocated to hook-and-line gear or pot gear and 7.5 percent of the sablefish TAC allocated to trawl gear is reserved for use by CDQ participants (see § 679.20(b)(1)(iii)).

[6]''Other flatfish'' includes all flatfish species, except for halibut (a prohibited species), flathead sole, Greenland turbot, rock sole, yellowfin sole, arrowtooth flounder and Alaska plaice.

[7]''Other rockfish'' includes all *Sebastes* and *Sebastolobus* species except for Pacific ocean perch, northern, shortraker, and rougheye rockfish.

[8]''Other species'' includes sculpins, sharks, skates and octopus. Forage fish, as defined at § 679.2, are not included in the ''other species'' category.

Reserves and the ICA for Pollock

Regulations at § 679.20(b)(1)(i) require that 15 percent of the TAC for each target species or species group, except for pollock and the hook-and-line and pot gear allocation of sablefish, be placed in a non-specified reserve. Regulations at § 679.20(b)(1)(iii) require that one half of each TAC amount placed in the non-specified reserve (7.5 percent), with the exception of squid, be allocated to the groundfish CDQ reserve and that 20 percent of the hook-and-line and pot gear allocation of sablefish be allocated to the fixed gear sablefish CDQ reserve. Regulations at §§ 679.20(a)(5)(i)(A) and 679.31(a)(2) also require that 10 percent of the Bering Sea and Aleutian Islands pollock TAC be allocated to the pollock CDQ directed fishing allowance. The entire Bogoslof District pollock TAC is allocated as an ICA (see § 679.20(a)(5)(ii)). With the exception of the hook-and-line and pot gear sablefish CDQ reserve, the regulations do not further apportion the CDQ reserves by gear. Regulations at § 679.21(e)(1)(i) also require that 7.5 percent of each PSC limit, with the exception of herring, be withheld as a PSQ reserve for the CDQ fisheries. Regulations governing the management of the CDQ and PSQ reserves are set forth at §§ 679.30 and 679.31.

Under regulations at § 679.20(a)(5)(i)(A)(*1*), NMFS allocates a pollock ICA of 3 percent of the Bering Sea pollock TAC after subtraction of the 10 percent CDQ reserve. This allowance is based on an examination of the incidental catch of pollock in target fisheries other than pollock from 1998 through 2003. During this 6-year period, the incidental catch of pollock ranged from a low of 2 percent in 2003 to a high of 5 percent in 1999, with a 6-year average of 3 percent. Because these incidental percentages are contingent on the relative amounts of other groundfish TACs, NMFS will be better able to assess the ICA amount when the Council makes final ABC and TAC amount recommendations in December. Under regulations that would be effective with the final rule implementing Amendment 82, NMFS recommends setting a 2,000 mt ICA for AI subarea pollock after a subtraction of the 10 percent CDQ directed fishing allowance. The Aleut Corporation's directed pollock fishery will be closed until regulations implementing Amendment 82 (if approved) become effective.

The regulations do not designate the remainder of the non-specified reserve by species or species group, and any amount of the reserve may be reapportioned to a target species or the ''other species'' category during the year, providing that such reapportionments do not result in overfishing, see § 679.20(b)(1)(ii).

Allocations of Pollock TAC Under the AFA

Regulations at § 679.20(a)(5)(i)(A) require that 10 percent of the Bering Sea subarea pollock TAC be allocated as a directed fishing allowance to the CDQ program. The remainder of the Bering Sea subarea pollock TAC, after the subtraction of an allowance (3 percent) for the incidental catch of pollock by vessels, including CDQ vessels, catching other groundfish species, is allocated as follows: 50 percent to AFA catcher vessels harvesting pollock for processing by the inshore component, 40 percent to AFA catcher/processors and catcher vessels harvesting pollock for processing by catcher/processors in the offshore component, and 10 percent to catcher vessels harvesting pollock for processing by AFA motherships. Table 2 lists these 2005 and 2006 proposed amounts.

The regulations also contain several specific requirements concerning pollock and pollock allocations under § 679.20(a)(5)(i)(A)(*4*). First, 8.5 percent of the pollock allocated to the catcher/processor sector will be available for harvest by AFA catcher vessels with catcher/processor sector endorsements, unless the Regional Administrator receives a cooperative contract that provides for the distribution of harvest between AFA catcher/processors and AFA catcher vessels in a manner agreed to by all members. Second, AFA catcher/processors not listed in the AFA are limited to harvesting not more than 0.5 percent of the pollock allocated to the catcher/processor sector. Table 2 lists the 2005 and 2006 proposed allocations of pollock TAC. Tables 8 through 13 list other provisions of the AFA, including inshore pollock cooperative allocations and listed catcher/processor and catcher vessel harvesting sideboard limits.

Table 2 also lists seasonal apportionments of pollock and harvest limits within the Steller Sea Lion Conservation Area (SCA). The harvest within the SCA, as defined at § 679.22(a)(7)(vii), is limited to 28 percent of the annual directed fishing allowance (DFA) until April 1. The remaining 12 percent of the 40 percent of the annual DFA allocated to the A season may be taken outside of the SCA before April 1 or inside the SCA after April 1. If the 28 percent of the annual DFA is not taken inside the SCA before April 1, the remainder will be available to be taken inside the SCA after April 1. The A season pollock SCA harvest limit will be apportioned to each sector in proportion to each sector's allocated percentage of the DFA. Table 2 lists by sector these 2005 and 2006 proposed amounts.

TABLE 2—2005 AND 2006 PROPOSED ALLOCATIONS OF POLLOCK TACS TO THE DIRECTED POLLOCK FISHERIES AND TO THE CDQ DIRECTED FISHING ALLOWANCES (DFA)[1]

[Amounts are in metric tons]

Area and sector	2005 allocations	2005 A season[1]		2005 B season[1]	2006 allocations	2006 A season[1]		2006 B season
		A season DFA	SCA harvest limit[2]	B season DFA		A season DFA	SCA harvest limit[2]	B season DFA
Bering Sea subarea	1,474,450	.....	.....	.....	1,474,000	.....	.....	.....
CDQ DFA	147,445	58,978	41,285	88,467	147,400	58,960	41,272	88,440
ICA[1]	46,445	.....	.....	.....	46,431	.....	.....	.....
AFA Inshore	640,280	256,112	179,278	384,168	640,085	256,034	179,224	384,051
AFA Catcher/Processors[3]	512,224	204,890	143,423	307,334	512,068	204,827	143,379	307,241
Catch by C/Ps	468,685	187,474	.....	281,211	468,542	187,417	.....	281,125
Catch by CVs[3]	43,539	17,416	.....	26,123	43,526	17,410	.....	26,115
Unlisted C/P Limit[4]	2,561	1,024	.....	1,537	2,560	1,024	.....	1,536
AFA Motherships	128,056	51,222	35,856	76,834	128,017	51,207	35,845	76,810
Excessive Harvesting Limit[5]	224,098	.....	.....	.....	224,030	.....	.....	.....

TABLE 2—2005 AND 2006 PROPOSED ALLOCATIONS OF POLLOCK TACS TO THE DIRECTED POLLOCK FISHERIES AND TO THE CDQ DIRECTED FISHING ALLOWANCES (DFA)[1]—Continued

[Amounts are in metric tons]

Area and sector	2005 allocations	2005 A season[1]		2005 B season[1]	2006 allocations	2006 A season[1]		2006 B season
		A season DFA	SCA harvest limit[2]	B season DFA		A season DFA	SCA harvest limit[2]	B season DFA
Excessive Processing Limit[6]	384,168	.....	.....	.....	384,051	.....	.....	.....
Total Bering Sea DFA	1,474,450	571,202	399,841	856,803	1,474,000	571,028	399,719	856,541
Aleutian Islands subarea[1]	19,000	.....	.....	.....	19,000	.....	.....	.....
CDQ DFA	1,900	760	.....	1,140	1,900	760	.....	1,140
ICA	2,000	1,200	.....	800	2,000	1,200	.....	800
Aleut Corporation	15,100	13,800	.....	1,300	15,100	13,640	.....	1,460
Bogoslof District ICA[7]	50	.....	.....	.....	50	.....	.....	.....

[1]Under § 679.20(a)(5)(i)(A), the Bering Sea subarea pollock after subtraction for the CDQ DFA - 10 percent and the ICA - 3 percent, the pollock TAC is allocated as a DFA as follows: inshore component - 50 percent, catcher/processor component - 40 percent, and mothership component - 10 percent. In the Bering Sea subarea, the A season, January 20 - June 10, is allocated 40 percent of the DFA and the B season, June 10 - November 1 is allocated 60 percent of the DFA. The Aleutian Islands (AI) AI directed pollock fishery allocation to the Aleut Corporation remains after subtraction for the CDQ DFA - 10 percent and the ICA - 2,000 mt. The Aleut Corporation directed pollock fishery is closed to directed fishing until the management provisions for the AI directed pollock fishery become effective under Amendment 82. In the AI subarea, the A season is allocated 40 percent of the ABC and the B season is allocated the remainder of the directed pollock fishery.

[2]In the Bering Sea subarea, no more than 28 percent of each sector's annual DFA may be taken from the SCA before April 1. The remaining 12 percent of the annual DFA allocated to the A season may be taken outside of SCA before April 1 or inside the SCA after April 1. If 28 percent of the annual DFA is not taken inside the SCA before April 1, the remainder is available to be taken inside the SCA after April 1.

[3]Under § 679.20(a)(5)(i)(A)(*4*), not less than 8.5 percent of the DFA allocated to listed catcher/processors shall be available for harvest only by eligible catcher vessels delivering to listed catcher/processors.

[4]Under § 679.20(a)(5)(i)(A)(*4*)(*iii*), the AFA unlisted catcher/processors are limited to harvesting not more than 0.5 percent of the catcher/processors sector's allocation of pollock.

[5]Under § 679.20(a)(5)(i)(A)(*6*) NMFS establishes an excessive harvesting share limit equal to 17.5 percent of the sum of the pollock DFAs.

[6]Under § 679.20(a)(5)(i)(A)(*7*) NMFS establishes an excessive processing share limit equal to 30.0 percent of the sum of the pollock DFAs.

[7]The Bogoslof District is closed by the proposed harvest specifications to directed fishing for pollock. The amounts specified are for ICA only, and are not apportioned by season or sector.

Allocation of the Atka Mackerel TAC

Under § 679.20(a)(8)(i), up to 2 percent of the Eastern Aleutian District and the Bering Sea subarea Atka mackerel ITAC may be allocated to jig gear. The amount of this allocation is determined annually by the Council based on several criteria, including the anticipated harvest capacity of the jig gear fleet. The Council recommended and NMFS proposes that 1 percent of the Atka mackerel ITAC in the Eastern Aleutian District and the Bering Sea subarea be allocated to jig gear in 2005 and 2006. Based on an ITAC of 9,554 mt, the jig gear allocation is 96 mt for 2005 and 2006.

Regulations at § 679.20(a)(8)(ii)(A) apportion the Atka mackerel ITAC into two equal seasonal allowances. After subtraction of the jig gear allocation, the first allowance is made available for directed fishing from January 1 (January 20 for trawl gear) to April 15 (A season), and the second seasonal allowance is made available from September 1 to November 1 (B season) (Table 3).

Under § 679.20(a)(8)(ii)(C)(*1*), the Regional Administrator will establish a harvest limit area (HLA) limit of no more than 60 percent of the seasonal TAC for the Western and Central Aleutian Districts. A lottery system is used for the HLA Atka mackerel directed fisheries to reduce the amount of daily catch in the HLA by about half and to disperse the fishery over two districts, see § 679.20(a)(8)(iii).

TABLE 3—2005 AND 2006 PROPOSED SEASONAL AND SPATIAL ALLOWANCES, GEAR SHARES, AND CDQ RESERVE OF THE BSAI ATKA MACKEREL TAC[1]

[Amounts are in metric tons]

Subarea and component	2005 and 2006 TAC	CDQ reserve	CDQ reserve HLA limit[4]	ITAC	Seasonal allowances[2]			
					A season[3]		B season[3]	
					Total	HLA limit[4]	Total	HLA limit[4]
Western AI District	20,660	1,550	930	17,561	8,781	5,268	8,781	5,268
Central AI District	31,100	2,333	1,400	26,435	13,218	7,931	13,218	7,931
EAI/BS subarea[5]	11,240	843	.....	9,554	.....	.....	.....	.....
Jig (1%)[6]	.....	.....	.....	96	.....	.....	.....	.....
Other gear (99%)	.....	.....	.....	9,458	4,729	.....	4,729	.....
Total	63,000	4,725	.....	53,550	26,727	.....	26,727	.....

[1]Regulations at §§ 679.20(a)(8)(ii) and 679.22(a) establish temporal and spatial limitations for the Atka mackerel fishery.

[2]The seasonal allowances of Atka mackerel are 50 percent in the A season and 50 percent in the B season.

[3]The A season is January 1 (January 20 for trawl gear) to April 15 and the B season is September 1 to November 1.

[4]Harvest Limit Area (HLA) limit refers to the amount of each seasonal allowance that is available for fishing inside the HLA (see § 679.2). In 2005 and 2006, 60 percent of each seasonal allowance is available for fishing inside the HLA in the Western and Central Aleutian Districts.

[5]Eastern Aleutian District and the Bering Sea subarea.

[6]Regulations at § 679.20 (a)(8)(i) require that up to 2 percent of the Eastern Aleutian District and the Bering Sea subarea ITAC be allocated to jig gear. The proposed amount of this allocation is 1 percent. The jig gear allocation is not apportioned by season.

Allocation of the Pacific Cod TAC

Under § 679.20(a)(7)(i)(A), 2 percent of the Pacific cod ITAC is allocated to vessels using jig gear, 51 percent to vessels using hook-and-line or pot gear, and 47 percent to vessels using trawl gear. Under regulations at § 679.20(a)(7)(i)(B), the portion of the Pacific cod TAC allocated to trawl gear is further allocated 50 percent to catcher vessels and 50 percent to catcher/processors. Under regulations at § 679.20(a)(7)(i)(C)(*1*), a portion of the Pacific cod TAC allocated to hook-and-line or pot gear is set aside as an ICA of Pacific cod in directed fisheries for groundfish using these gear types. Based on anticipated incidental catch in these fisheries, NMFS proposes an ICA of 500 mt. The remainder of Pacific cod is further allocated to vessels using hook-and-line or pot gear as the following DFAs: 80 percent to hook-and-line catcher/processors, 0.3 percent to hook-and-line catcher vessels, 3.3 percent to pot catcher processors, 15 percent to pot catcher vessels, and 1.4 percent to catcher vessels under 60 feet (18.3 m) length overall (LOA) using hook-and-line or pot gear.

Due to concerns about the potential impact of the Pacific cod fishery on Steller sea lions and their critical habitat, the apportionment of the ITAC disperses the Pacific cod fisheries into seasonal allowances (see §§ 679.20(a)(7)(iii)(A) and 679.23(e)(5)). For most hook-and-line and pot gear, the first seasonal allowance of 60 percent of the ITAC is made available for directed fishing from January 1 to June 10, and the second seasonal allowance of 40 percent of the ITAC is made available from June 10 (September 1 for pot gear) to December 31. No seasonal harvest constraints are imposed on the Pacific cod fishery by catcher vessels less than 60 feet (18.3 m) LOA using hook-and-line or pot gear. For trawl gear, the first season is January 20 to April 1 and is allocated 60 percent of the ITAC. The second season, April 1 to June 10, and the third season, June 10 to November 1, are each allocated 20 percent of the ITAC. The trawl catcher vessel allocation is further allocated as 70 percent in the first season, 10 percent in the second season, and 20 percent in the third season. The trawl catcher/processor allocation is allocated 50 percent in the first season, 30 percent in the second season, and 20 percent in the third season. For jig gear, the first and third seasonal allowances are each allocated 40 percent of the ITAC and the second seasonal allowance is allocated 20 percent of the ITAC. Table 4 lists the 2005 and 2006 proposed allocations and seasonal apportionments of the Pacific cod ITAC. In accordance with §§ 679.20(a)(7)(ii)(D) and 679.20(a)(7)(iii)(B), any unused portion of a seasonal Pacific cod allowance will become available at the beginning of the next seasonal allowance.

TABLE 4—2005 AND 2006 PROPOSED GEAR SHARES AND SEASONAL ALLOWANCES OF THE BSAI PACIFIC COD TAC

Gear Sector	Percent	2005 Share of gear sector total	2005 Subtotal percentages for gear sectors	2005 Share of gear sector total	2005 Seasonal apportionment[1]		2006 Share of gear sector total	2006 Subtotal percentages for gear sectors	2006 Share of gear sector total	2006 Seasonal apportionment[1]	
					Date	Amount				Date	Amount
Total hook-and-line/pot gear	51	93,615	.....	.....	.....	.....	93,419	.....	.....	.....	.....
Hook-and-line/pot ICA	.....	.....	.....	500	.....	.....	.....	.....	500	.....	.....
Hook-and-line/pot sub-total	.....	93,115	.....	.....	.....	.....	92,919	.....	.....	.....	.....
Hook-and-line C/P	.....	.....	80	74,492	Jan 1 – Jun 10 Jun 10 – Dec 31	44,695 29,797	.....	80	74,335	Jan 1 – Jun 10 Jun 10 – Dec 31	44,601 29,734
Hook-and-line CV	.....	.....	0.3	279	Jan 1 – Jun 10 Jun 10 – Dec 31	167 112	.....	0.3	279	Jan 1–Jun 10 Jun 10 – Dec 31	167 112
Pot C/P	.....	.....	3.3	3,073	Jan 1 – Jun 10 Sept 1 – Dec 31	1,844 1,229	.....	3.3	3,066	Jan 1 – Jun 10 Sept 1 – Dec 31	1,840 1,226
Pot CV	.....	.....	15	13,967	Jan 1 – Jun 10 Sept 1 – Dec 31	8,380 5,587	.....	15	13,938	Jan 1 – Jun 10 Sept 1 – Dec 31	8,363 5,575
CV < 60 feet LOA using Hook-and-line or Pot gear	.....	.....	1.4	1,304	.....	.....	.....	1.4	1,301	.....	.....
Total Trawl Gear	47	86,273	.....	.....	.....	.....	86,092	.....	.....	.....	.....
Trawl CV			50	43,136	Jan 20 – Apr 1	30,195		50	43,046	Jan 20 – Apr 1	30,132
				.....	Apr 1 – Jun 10	4,314			.....	Apr 1 – Jun 10	4,305
				.....	Jun 10 – Nov 1	8,627			.....	Jun 10 – Nov 1	8,609
Trawl CP			50	43,136	Jan 20 – Apr 1	21,568		50	43,046	Jan 20 – Apr 1	21,523
				.....	Apr 1 – Jun 10	12,941			.....	Apr 1 – Jun 10	12,914
				.....	Jun 10 – Nov 1	8,627			.....	Jun 10 – Nov 1	8,609
Jig	2	3,671	.....	.....	Jan 1 – Apr 30	1,468	3,664	.....	.....	Jan 1 – Apr 30	1,465
			.....	.....	Apr 30 – Aug 31	734		.....	.....	Apr 30 – Aug 31	733
			.....	.....	Aug 31 – Dec 31	1,469		.....	.....	Aug 31 – Dec 31	1,466
Total	100	183,559	.....	.....	.....	.....	183,175	.....	.....	.....	.....

[1]For most non-trawl gear the first season is allocated 60 percent of the ITAC and the second season is allocated 40 percent of the ITAC. For jig gear, the first season and third seasons are each allocated 40 percent of the ITAC and the second season is allocated 20 percent of the ITAC. No seasonal harvest constraints are imposed for the Pacific cod fishery by catcher vessels less than 60 feet (18.3 m) LOA using hook-and-line or pot gear. For trawl gear, the first season is allocated 60 percent of the ITAC and the second and third seasons are each allocated 20 percent of the ITAC. The trawl catcher vessels' allocation is further allocated as 70 percent in the first season, 10 percent in the second season and 20 percent in the third season. The trawl catcher/processors' allocation is allocated 50 percent in the first season, 30 percent in the second season and 20 percent in the third season. Any unused portion of a seasonal Pacific cod allowance will be reapportioned to the next seasonal allowance.

Sablefish Gear Allocation

Regulations at § 679.20(a)(4)(iii) and (iv) require that sablefish TACs for the Bering Sea and AI subareas be allocated between trawl and hook-and-line or pot gear. Gear allocations of the TACs for the Bering Sea subarea are 50 percent for trawl gear and 50 percent for hook-and-line or pot gear and for the AI subarea are 25 percent for trawl gear and 75 percent for hook-and-line or pot gear. Regulations at § 679.20(b)(1)(iii)(B) require that 20 percent of the hook-and-line and pot gear allocation of sablefish be apportioned to the CDQ reserve. Additionally, regulations at § 679.20(b)(1)(iii)(A) require that 7.5 percent of the trawl gear allocation of sablefish (one half of the reserve) be apportioned to the CDQ reserve. Under regulations implementing Amendments 48/48, the harvest specifications for the hook-and-line gear and pot gear sablefish IFQ fisheries will be limited to the 2005 fishing year to ensure those fisheries are conducted concurrent with the halibut IFQ fishery. Having sablefish IFQ fisheries concurrent with the halibut IFQ fishery would reduce the potential for discards of halibut and sablefish in these fisheries. The sablefish IFQ fisheries would remain closed at the beginning of each fishing year until the final harvest specifications for the sablefish IFQ fisheries are in effect. The trawl sablefish fishery would be managed using harvest specifications for a 2-year period concurrent with the remaining target species in the BSAI. Table 5 specifies the 2005 and 2006 proposed gear allocations of the sablefish TAC and CDQ reserve amounts.

TABLE 5—2005 AND 2006 PROPOSED GEAR SHARES AND CDQ RESERVE OF BSAI SABLEFISH TACS

[Amounts are in metric tons]

Subarea and gear	Percent of TAC	2005 Share of TAC	2005 ITAC[1]	2005 CDQ reserve	2006 Share of TAC	2006 ITAC	2006 CDQ reserve
Bering Sea							
Trawl[2]	50	1,209	1,028	91	1,122	954	84
Hook-and-line/pot gear[3]	50	1,209	.....	242	.....	.....	.....
TOTAL	100	2,418	1,028	332	2,244	954	84
Aleutian Islands							
Trawl[2]	25	697	592	52	647	550	49
Hook-and-line/pot gear[3]	75	2,093	.....	419	.....	.....	.....
TOTAL	100	2,790	592	471	2,589	550	49

[1]Except for the sablefish hook-and-line or pot gear allocation, 15 percent of TAC is apportioned to the reserve. The ITAC is the remainder of the TAC after the subtraction of these reserves.

[2]For the portion of the sablefish TAC allocated to vessels using trawl gear, one half of the reserve (7.5 percent of the specified TAC) is reserved for the CDQ program.

[3]For the portion of the sablefish TAC allocated to vessels using hook-and-line or pot gear, 20 percent of the allocated TAC is reserved for use by CDQ participants. Regulations in § 679.20(b)(1) do not provide for the establishment of an ITAC for sablefish allocated to hook-and-line or pot gear.

Allocation of PSC Limits for Halibut, Crab, Salmon, and Herring

PSC limits for halibut are set in regulations at § 679.21(e). For the BSAI trawl fisheries, the limit is 3,675 mt of Pacific halibut mortality, and for non-trawl fisheries, the limit is 900 mt of mortality. Regulations at § 679.21(e)(1)(vii) specify the 2005 and 2006 proposed chinook salmon PSC limit for the pollock fishery to be 29,000 fish. Regulations at § 679.21(e)(1)(i) allocate 7.5 percent, or 2,175 chinook salmon, as the proposed PSQ for the CDQ program and the remaining 26,825 chinook salmon to the non-CDQ fisheries. If it is approved, Amendment 82 would establish an AI chinook salmon limit of 700 fish, applicable upon the implementation of the final rule for Amendment 82 in early 2005. Regulations at § 679.21(e)(1)(i) would allocate 7.5 percent, or 175 chinook salmon, as the proposed AI PSQ for the CDQ program and the remaining 525 chinook salmon to the non-CDQ fisheries. For non-chinook salmon, regulations at § 679.21(e)(1)(viii) specify the 2005 and 2006 proposed non-chinook salmon PSC limit to be 42,000 fish. Regulations at § 679.21(e)(1)(i) allocate 7.5 percent, or 3,150 non-chinook salmon, as the proposed PSQ for the CDQ program and the remaining 38,850 non-chinook salmon to the non-CDQ fisheries. PSC limits for crab and herring are specified annually based on abundance and spawning biomass. Due to the lack of new information concerning PSC limits and apportionments in October 2004, the Council recommended using the halibut, crab, and herring 2004 PSC amounts for the proposed 2005 and 2006 amounts. The Council will reconsider these amounts in December 2004, based on recommendations by the Plan Team and the SSC.

The red king crab mature female abundance is estimated from the 2003 survey data to be 29.7 million king crab and the effective spawning biomass is estimated to be 60.7 million pounds (27,500 mt). Based on the criteria set out at § 679.21(e)(1)(ii), the 2005 and 2006 proposed PSC limit of red king crab in Zone 1 for trawl gear is 197,000 animals as a result of the mature female abundance being above 8.4 million king crab and of the effective spawning biomass estimate being greater than 55 million pounds (24,948 mt).

Regulations at § 679.21(e)(3)(ii)(B) establish criteria under which NMFS must specify an annual red king crab bycatch limit for the Red King Crab Savings Subarea (RKCSS). The regulations limit the bycatch limits within the RKCSS up to 35 percent of the trawl bycatch allowance specified for the rock sole/flathead sole/''other flatfish'' fishery category and are based on the need to optimize the groundfish harvest relative to red king crab bycatch. The Council recommended, and NMFS proposed, a red king crab bycatch limit equal to 35 percent of the trawl bycatch allowance specified for the rock sole/flathead sole/''other flatfish'' fishery category within the RKCSS.

Based on 2003 survey data, the *Chionoecetes bairdi* crab abundance is estimated to be 448.8 million animals. Given the criteria set out at § 679.21(e)(1)(iii), the 2005 and 2006 proposed *C. bairdi* crab PSC limit for

trawl gear is 980,000 animals in Zone 1 and 2,970,000 animals in Zone 2, as a result of the *C. bairdi* crab abundance estimate of over 400 million animals.

Under § 679.21(e)(1)(iv), the PSC limit for *C. opilio* crab is based on total abundance as indicated by the NMFS annual bottom trawl survey. The *C. opilio* crab PSC limit is set at 0.1133 percent of the Bering Sea abundance index. Based on the 2003 survey estimate of 2.63 billion animals, the calculated limit is 2,981,000 animals. Because this limit is less than 4.5 million, under § 679.21(e)(1)(iv)(B), the 2005 and 2006 proposed *C. opilio* crab PSC limit is 4,350,000 million animals.

Under § 679.21(e)(1)(vi), the proposed PSC limit of Pacific herring caught while conducting any trawl operation for groundfish in the BSAI is 1 percent of the annual eastern Bering Sea herring biomass. NMFS's best estimate of 2004 herring biomass is 187,648 mt. This amount was derived using 2003 survey data and an age-structured biomass projection model developed by the Alaska Department of Fish and Game (ADF&G). Therefore, the proposed herring PSC limit for 2005 and 2006 is 1,876 mt.

Under § 679.21(e)(1)(i), 7.5 percent of each PSC limit specified for crab and halibut is reserved as a PSQ reserve for use by the groundfish CDQ program. Regulations at § 679.21(e)(3) require the apportionment of each trawl PSC limit into PSC bycatch allowances for seven specified fishery categories. Regulations at § 679.21(e)(4)(ii) authorize the apportionment of the non-trawl halibut PSC limit into PSC bycatch allowances for five fishery categories. Table 6 lists the proposed fishery bycatch allowances for the trawl and non-trawl fisheries.

Regulations at § 679.21(e)(4)(ii) authorize exemption of specified non-trawl fisheries from the halibut PSC limit. As in past years, NMFS, after consultation with the Council, is proposing to exempt pot gear, jig gear, and the sablefish IFQ hook-and-line gear fishery categories from halibut bycatch restrictions because these fisheries use selective gear types that take few halibut compared with other gear types, such as non-pelagic trawl. In 2004, total groundfish catch for the pot gear fishery in the BSAI was approximately 17,648 mt, with an associated halibut bycatch mortality of about 9 mt. The 2004 groundfish jig gear fishery harvested about 215 mt of groundfish. Most vessels in the jig gear fleet are less than 60 ft (18.3 m) LOA and are exempt from observer coverage requirements. As a result, observer data are not available on halibut bycatch in the jig gear fishery. However, a negligible amount of halibut bycatch mortality is assumed because of the selective nature of this gear type and the likelihood that halibut caught with jig gear have a high survival rate when released.

As in past years, the Council recommended that the sablefish IFQ fishery be exempt from halibut bycatch restrictions because of the sablefish and halibut IFQ program (subpart D of 50 CFR part 679). The sablefish IFQ program requires legal-sized halibut to be retained by vessels using hook-and-line gear if a halibut IFQ permit holder or his or her hired master is aboard and is holding unused halibut IFQ. NMFS concurs with the Council's recommendation. This provision results in reduced halibut discard in the sablefish fishery. In 1995, about 36 mt of halibut discard mortality was estimated for the sablefish IFQ fishery. The estimates for 1996 through 2004 have not been calculated; however, NMFS has no information indicating that it would be significantly different.

Regulations at § 679.21(e)(5) authorize NMFS, after consultation with the Council, to establish seasonal apportionments of PSC amounts in order to maximize the ability of the fleet to harvest the available groundfish TAC and to minimize bycatch. The factors to be considered are (1) Seasonal distribution of prohibited species, (2) seasonal distribution of target groundfish species, (3) PSC bycatch needs on a seasonal basis relevant to prohibited species biomass, (4) expected variations in bycatch rates throughout the year, (5) expected start of fishing effort, and (6) economic effects of seasonal PSC apportionments on industry sectors. The Council recommended seasonal PSC apportionments to maximize harvest among gear types, fisheries, and seasons while minimizing bycatch of PSC based on the above criteria. NMFS concurs with the Council's recommendations. These recommendations are listed in Table 6.

TABLE 6—2005 AND 2006 PROPOSED PROHIBITED SPECIES BYCATCH ALLOWANCES FOR THE BSAI TRAWL AND NON-TRAWL FISHERIES

Trawl Fisheries	Prohibited species and zone					
	Halibut (mt) BSAI	Herring (mt) BSAI	Red King Crab (animals) Zone 1[1]	*C. opilio* (animals) COBLZ[2]	*C. bairdi* (animals)	
					Zone 1[1]	Zone 2[1]
Yellowfin sole	886	171	33,843	2,776,981	340,844	1,788,459
January 20 - April 1	262	.....	.....	.....	.....	.....
April 1 - May 21	195	.....	.....	.....	.....	.....
May 21 - July 1	49	.....	.....	.....	.....	.....
July 1 - December 31	380	.....	.....	.....	.....	.....
Rock sole/other flat/flathead sole[4]	779	25	121,413	969,130	365,320	596,154
January 20 - April 1	448	.....	.....	.....	.....	.....
April 1 - July 1	164	.....	.....	.....	.....	.....
July 1 - December 31	167	.....	.....	.....	.....	.....
Turbot/arrowtooth/sablefish[5]	.....	11	.....	40,238	.....	.....
Rockfish	.....	.....	.....	.....	.....	.....
July 1 - December 31	69	9	.....	40,237	.....	10,988
Pacific cod	1,434	25	26,563	124,736	183,112	324,176
Midwater trawl pollock	.....	1,456	.....	.....	.....	.....
Pollock/Atka mackerel/other[6]	232	179	406	72,428	17,224	27,473
Red King Crab Savings Subarea[3]	.....	.....	.....	.....	.....	.....
(non-pelagic trawl)	.....	42,495	.....	.....	.....	.....
Total trawl PSC	3,400	1,876	182,225	4,023,750	906,500	2,747,250

TABLE 6—2005 AND 2006 PROPOSED PROHIBITED SPECIES BYCATCH ALLOWANCES FOR THE BSAI TRAWL AND NON-TRAWL FISHERIES—Continued

Trawl Fisheries	Prohibited species and zone					
	Halibut (mt) BSAI	Herring (mt) BSAI	Red King Crab (animals) Zone 1[1]	*C. opilio* (animals) COBLZ[2]	*C. bairdi* (animals)	
					Zone 1[1]	Zone 2[1]
Non-trawl Fisheries						
Pacific cod - Total	775					
January 1 - June 10	320					
June 10 - August 15	0					
August 15 - December 31	455					
Other non-trawl - Total	58					
May 1 - December 31	58					
Groundfish pot and jig	exempt					
Sablefish hook-and-line	exempt					
Total non-trawl PSC	833					
PSQ reserve[7]	342	.....	14,775	326,250	73,500	222,750
PSC grand total	4,575	1,876	197,000	4,350,000	980,000	2,970,000

[1]Refer to § 679.2 for definitions of areas.
[2]*C. opilio* Bycatch Limitation Zone. Boundaries are defined at 50 CFR part 679, Figure 13.
[3]"Other flatfish" for PSC monitoring includes all flatfish species, except for halibut (a prohibited species), greenland turbot, rock sole, yellowfin sole and arrowtooth flounder.
[4]Greenland turbot, arrowtooth flounder, and sablefish fishery category.
[5]Pollock other than pelagic trawl pollock, Atka mackerel, and "other species" fishery category.
[6]With the exception of herring, 7.5 percent of each PSC limit is allocated to the CDQ program as PSQ reserve. The PSQ reserve is not allocated by fishery, gear or season.
[7]In October 2004, the Council recommended that red king crab bycatch for trawl fisheries within the RKCSS be limited to 35 percent of the total allocation to the rock sole/flathead sole/≥other flatfish" fishery category (see § 679.21(e)(3)(ii)(B)).

Halibut Discard Mortality Rates

To monitor halibut bycatch mortality allowances and apportionments, the Regional Administrator will use observed halibut bycatch rates, assumed discard mortality rates (DMR), and estimates of groundfish catch to project when a fishery's halibut bycatch mortality allowance or seasonal apportionment is reached. The DMRs are based on the best information available, including information contained in the annual SAFE report.

The Council recommended and NMFS proposes that the recommended halibut DMRs developed by staff of the International Pacific Halibut Commission (IPHC) for the 2004 BSAI groundfish fisheries be used for monitoring halibut bycatch allowances established for the 2005 and 2006 groundfish fisheries (see Table 7). These DMRs were developed by the IPHC using the 10-year mean DMRs for the BSAI non-CDQ groundfish fisheries. Plots of annual DMRs against the 10-year mean indicated little change since 1990 for most fisheries. DMRs were more variable for the smaller fisheries that typically take minor amounts of halibut bycatch. The IPHC will analyze observer data annually and recommend changes to the DMRs where a fishery DMR shows large variation from the mean. The IPHC has been calculating the CDQ fisheries DMRs since 1998 and a 10-year mean is not yet available. The justification for these proposed DMRs is discussed in Appendix A to the final SAFE report dated November 2003. The proposed DMRs listed in Table 7 are subject to change pending the results of an updated analysis on halibut DMRs in the groundfish fisheries that IPHC staff is scheduled to present to the Council at its December 2004 meeting.

TABLE 7—2005 AND 2006 PROPOSED ASSUMED PACIFIC HALIBUT DISCARD MORTALITY RATES FOR THE BSAI FISHERIES

Fishery	Pre-season assumed mortality (percent)
Hook-and-line gear fisheries	
Greenland turbot	15
Other Species	11
Pacific cod	11
Rockfish	16
Trawl gear fisheries	
Atka mackerel	78
Flathead sole	67
Greenland turbot	72
Non-pelagic pollock	76
Pelagic pollock	85

TABLE 7—2005 AND 2006 PROPOSED ASSUMED PACIFIC HALIBUT DISCARD MORTALITY RATES FOR THE BSAI FISHERIES—Continued

Fishery	Pre-season assumed mortality (percent)
Other flatfish	71
Other species	67
Pacific cod	68
Rockfish	74
Rock sole	77
Sablefish	49
Yellowfin sole	78
Pot gear fisheries	
Other species	8
Pacific cod	8
CDQ trawl fisheries	
Atka mackerel	85
Flathead sole	90
Non-pelagic pollock	85
Pelagic pollock	89
Rockfish	90
Yellowfin sole	82
CDQ hook-and-line fisheries	
Greenland turbot	4
Pacific cod	11
CDQ pot fisheries	
Pacific cod	2
Sablefish	36

Bering Sea Subarea Inshore Pollock Allocations

Regulations at § 679.4(l) set forth procedures for AFA inshore catcher vessel pollock cooperatives to apply for and receive cooperative fishing permits and inshore pollock allocations. For 2004, NMFS received applications from seven inshore catcher vessel cooperatives. Applications for 2005 must be received by the Regional Administrator by December 1, 2004. Table 8 lists the proposed pollock allocations to the seven inshore catcher vessel pollock cooperatives based on 2004 cooperative allocations and the assumption that the cooperatives' membership will remain unchanged in 2005 and 2006. Allocations for cooperatives and vessels not participating in cooperatives are not made for the AI subarea because the AI subarea has been closed to directed fishing for pollock and the CAA requires the non-CDQ directed pollock fishery to be fully allocated to the Aleut Corporation. The Bering Sea subarea allocations may be revised pending adjustments to cooperatives' membership prior to 2005 and 2006.

TABLE 8—2005 AND 2006 PROPOSED BERING SEA SUBAREA INSHORE COOPERATIVE ALLOCATIONS

[Amounts are in metric tons]

Cooperative name and member vessels	Sum of member vessel's official catch histories[1] (mt)	Percentage of inshore sector allocation	2005 Annual co-op allocation (mt)	2006 Annual co-op allocation (mt)
Akutan Catcher Vessel Association ALDEBARAN, ARCTIC EXPLORER, ARCTURUS, BLUE FOX, CAPE KIWANDA, COLUMBIA, DOMINATOR, EXODUS, FLYING CLOUD, GOLDEN DAWN, GOLDEN PISCES, HAZEL LORRAINE, INTREPID EXPLORER, LESLIE LEE, LISA MELINDA, MAJESTY, MARCY J, MARGARET LYN, MARK I, NORDIC EXPLORER, NORTHERN PATRIOT, NORTHWEST EXPLORER, PACIFIC RAM, PACIFIC VIKING, PEGASUS, PEGGY JO, PERSEVERANCE, PREDATOR, RAVEN, ROYAL AMERICAN, SEEKER, SOVEREIGNTY, TRAVELER, VIKING EXPLORER	245,922	28.130%	180,110	180,055
Arctic Enterprise Association BRISTOL EXPLORER, OCEAN EXPLORER, PACIFIC EXPLORER	36,807	4.210%	26,957	26,948
Northern Victor Fleet Cooperative ANITA J, COLLIER BROTHERS, COMMODORE, EXCALIBUR II, GOLDRUSH, HALF MOON BAY, MISS BERDIE, NORDIC FURY, PACIFIC FURY, POSEIDON, ROYAL ATLANTIC, SUNSET BAY, STORM PETREL	73,656	8.425%	53,945	53,929
Peter Pan Fleet Cooperative AJ, AMBER DAWN, AMERICAN BEAUTY, ELIZABETH F, MORNING STAR, OCEAN LEADER, OCEANIC, PROVIDIAN, TOPAZ, WALTER N	23,850	2.728%	17,467	17,462
Unalaska Cooperative ALASKA ROSE, BERING ROSE, DESTINATION, GREAT PACIFIC, MESSIAH, MORNING STAR, MS AMY, PROGRESS, SEA WOLF, VANGUARD, WESTERN DAWN	106,737	12.209%	78,173	78,149
UniSea Fleet Cooperative ALSEA, AMERICAN EAGLE, ARGOSY, AURIGA, AURORA, DEFENDER, GUN-MAR, MAR-GUN, NORDIC STAR, PACIFIC MONARCH, SEADAWN, STARFISH, STARLITE, STARWARD	213,521	24.424%	156,380	156,333
Westward Fleet Cooperative ALASKAN COMMAND, ALYESKA, ARCTIC WIND, CAITLIN ANN, CHELSEA K, DONA MARTITA, FIERCE ALLEGIANCE, HICKORY WIND, OCEAN HOPE 3, PACIFIC KNIGHT, PACIFIC PRINCE, VIKING, WESTWARD I	189,942	21.727%	139,111	139,069
Open access AFA vessels	0	0%	0	0
Total inshore allocation	874,238	100%	640,280	640,085

[1]According to regulations at § 679.62(e)(1), the individual catch history for each vessel is equal to the vessel's best 2 of 3 years inshore pollock landings from 1995 through 1997 and includes landings to catcher/processors for vessels that made 500 or more mt of landings to catcher/processors from 1995 through 1997.

According to regulations at § 679.20(a)(5)(i)(A)(*3*), NMFS must further divided the inshore sector allocation into allocations for cooperatives and for inshore open access. In addition, according to regulations at § 679.22(a)(7)(vii), NMFS must establish harvest limits inside the SCA and provide a set-aside so that catcher vessels less than or equal to 99 ft (30.2 m) LOA have the opportunity to operate entirely within the SCA until April 1. Accordingly, Table 9 lists the proposed apportionment of the Bering Sea subarea inshore pollock allocation into allocations for vessels fishing in a cooperative and for vessels fishing for the inshore open access allocation and

establishes a cooperative-sector SCA set-aside for AFA catcher vessels less than or equal to 99 ft (30.2 m) LOA. The SCA set-aside for catcher vessels less than or equal to 99 ft (30.2 m) LOA that are not participating in a cooperative will be established inseason based on actual participation levels and is not included in Table 9. These proposed allocations may be revised pending final review and approval of 2005 and 2006 cooperative agreements.

TABLE 9—2005 AND 2006 PROPOSED BERING SEA SUBAREA POLLOCK ALLOCATIONS TO THE COOPERATIVE AND OPEN ACCESS SECTORS OF THE INSHORE POLLOCK FISHERY

[Amounts are in metric tons]

	2005 A season TAC	2005 A season inside SCA[1]	2005 B season TAC	2006 A season TAC	2006 A season inside SCA	2006 B season TAC
Inshore cooperative sector						
Vessels > 99 ft	n/a	153,969	n/a	n/a	153,923	n/a
Vessels ≤ 99 ft	n/a	25,309	n/a	n/a	25,301	n/a
Total	256,112	179,278	384,168	256,034	179,224	384,051
Open access sector	0	0[2]	0	0	0[2]	0
Total inshore	256,112	179,278	384,168	256,034	179,224	384,051

[1]The Steller sea lion conservation area (SCA) established at § 679.22(a)(7)(vii).

[2]The SCA limitations for vessels less than or equal to 99 ft LOA that are not participating in a cooperative will be established on an inseason basis in accordance with § 679.22(a)(7)(vii)(C)(*2*) which specifies that ''the Regional Administrator will prohibit directed fishing for pollock by vessels greater than 99 ft (30.2 m) LOA, catching pollock for processing by the inshore component before reaching the inshore SCA harvest limit before April 1 to accommodate fishing by vessels less than or equal to 99 ft (30.2 m) inside the SCA until April 1.''

Listed AFA Catcher/Processor Sideboard Limits

According to regulations at § 679.64(a), the Regional Administrator will restrict the ability of listed AFA catcher/processors to engage in directed fishing for groundfish species other than pollock to protect participants in other groundfish fisheries from adverse effects resulting from the AFA and from fishery cooperatives in the directed pollock fishery. The basis for these sideboard limits is described in detail in the final rule implementing major provisions of the AFA (67 FR 79692, December 30, 2002). Table 10 lists the 2005 and 2006 proposed catcher/processor sideboard limits.

All groundfish other than pollock that are harvested by listed AFA catcher/processors, whether as targeted catch or incidental catch, will be deducted from the proposed sideboard limits in Table 10. However, groundfish other than pollock that are delivered to listed catcher/processors by catcher vessels will not be deducted from the 2005 and 2006 proposed sideboard limits for the listed catcher/processors.

TABLE 10—2005 AND 2006 PROPOSED LISTED BSAI AMERICAN FISHERIES ACT CATCHER/PROCESSOR GROUNDFISH SIDEBOARD LIMITS

[Amounts are in metric tons]

Target species	Area	1995 - 1997			2005 Proposed ITAC available to trawl C/Ps	2005 Proposed C/P sideboard limit	2006 Proposed ITAC available to trawl C/Ps	2006 Proposed C/P sideboard limit
		Retained catch	Total catch	Ratio of retained catch to total catch				
Pacific cod trawl	BSAI	12,424	48,177	0.258	43,136	11,129	43,046	11,106
Sablefish trawl	BS	8	497	0.016	1,028	16	954	15
	AI	0	145	0.000	592	0	550	0
Atka mackerel	Western AI	.....	.....	.....	.....	.....	.....	.....
	A season[1]	n/a	n/a	0.200	8,781	1,756	8,781	1,756
	HLA limit[2]	.....	.....	.....	5,269	1,054	5,269	1,054
	B season	n/a	n/a	0.200	8,781	1,756	8,781	1,756
	HLA limit	.....	.....	.....	5,269	1,054	5,269	1,054
	Central AI	.....	.....	.....	.....	.....	.....	.....
	A season[1]	n/a	n/a	0.115	13,218	1,520	13,218	1,520
	HLA limit	.....	.....	.....	7,931	912	7,931	912
	B season	n/a	n/a	0.115	13,218	1,520	13,218	1,520
	HLA limit	.....	.....	.....	7,931	912	7,931	912
Yellowfin sole	BSAI	100,192	435,788	0.230	73,164	16,828	73,164	16,828
Rock sole	BSAI	6,317	169,362	0.037	35,233	1,304	34,850	1,289
Greenland turbot	BS	121	17,305	0.007	2,295	16	2,295	16
	AI	23	4,987	0.005	680	3	680	3
Arrowtooth flounder	BSAI	76	33,987	0.002	10,200	20	10,200	20
Flathead sole	BSAI	1,925	52,755	0.036	16,150	581	16,150	581
Alaska plaice	BSAI	14	9,438	0.001	8,500	9	8,500	9
Other flatfish	BSAI	3,058	52,298	0.058	2,550	148	2,550	148
Pacific ocean perch	BS	12	4,879	0.002	1,635	3	1,655	3
	Western AI	54	13,598	0.004	3,957	16	4,006	16
	Central AI	3	5,698	0.001	2,257	2	2,286	2
	Eastern AI	6,179	125	0.020	2,369	47	2,398	48
Northern rockfish	BSAI	91	13,040	0.007	4,250	30	4,250	30
Shortraker rockfish	BSAI	50	2,811	0.018	447	8	447	8
Rougheye rockfish	BSAI	50	2,811	0.018	166	3	166	3
Other rockfish	BS	18	621	0.029	391	11	391	11
	AI	22	806	0.027	539	15	539	15
Squid	BSAI	73	3,328	0.022	1,084	24	1,084	24
Other species	BSAI	553	68,672	0.008	23,124	185	23,124	185

[1]The seasonal apportionment of Atka mackerel in the open access fishery is 50 percent in the A season and 50 percent in the B season. Listed AFA catcher/processors are limited to harvesting no more than zero in the Eastern Aleutian District and Bering Sea subarea, 20 percent of the annual TAC specified for the Western Aleutian District, and 11.5 percent of the annual TAC specified for the Central Aleutian District.

[2]Harvest Limit Area (HLA) limit refers to the amount of each seasonal allowance that is available for fishing inside the HLA (see § 679.2). In 2005 and 2006, 60 percent of each seasonal allowance is available for fishing inside the HLA in the Western and Central Aleutian Districts.

Regulations at § 679.64(a)(5) establish a formula for PSC sideboard limits for listed AFA catcher/processors. These amounts are equivalent to the percentage of PSC amounts taken in the groundfish fisheries other than pollock by the AFA catcher/processors listed in subsection 208(e) and section 209 of the AFA from 1995 through 1997 (see Table 10). These amounts were used to calculate the relative amount of PSC that was caught by pollock catcher/processors shown in Table 10. The 2005 and 2006 PSC limits available to trawl catcher/processors are multiplied by the ratios to determine the PSC sideboard limits for listed AFA catcher/processors in the 2005 and 2006 groundfish fisheries other than pollock.

PSC that is caught by listed AFA catcher/processors participating in any groundfish fishery other than pollock listed in Table 11 would accrue against the 2005 and 2006 proposed PSC limits for the listed AFA catcher/processors. Regulations at § 679.21(e)(3)(v) authorize NMFS to close directed fishing for groundfish other than pollock for listed AFA catcher/processors once a 2005 and 2006 proposed PSC limit listed in Table 11 is reached.

Crab or halibut PSC that is caught by listed AFA catcher/processors while fishing for pollock will accrue against the bycatch allowances annually specified for either the midwater pollock or the pollock/Atka mackerel/''other species'' fishery categories according to regulations at § 679.21(e)(3)(iv).

TABLE 11—2005 AND 2006 PROPOSED BSAI AMERICAN FISHERIES ACT LISTED CATCHER/PROCESSOR PROHIBITED SPECIES SIDEBOARD LIMITS[1]

PSC species	1995 - 1997			2005 and 2006 Proposed PSC available to trawl vessels	2005 and 2006 Proposed C/P sideboard limit
	PSC catch	Total PSC	Ratio of PSC catch to total PSC		
Halibut mortality	955	11,325	0.084	3,400	286
Red king crab	3,098	473,750	0.007	182,225	1,276
C. opilio	2,323,731	15,139,178	0.153	4,023,750	615,634
C. bairdi	.....	.....	.....	.....	.....
Zone 1	385,978	2,750,000	0.140	906,500	126,910
Zone 2	406,860	8,100,000	0.050	2,747,250	137,363

[1]Halibut amounts are in metric tons of halibut mortality. Crab amounts are in numbers of animals.

AFA Catcher Vessel Sideboard Limits

According to regulations at § 679.64(b), the Regional Administrator restricts the ability of AFA catcher vessels to engage in directed fishing for groundfish species other than pollock to protect participants in other groundfish fisheries from adverse effects resulting from the AFA and from fishery cooperatives in the directed pollock fishery. Regulations at § 679.64(b) establish formulas for setting AFA catcher vessel groundfish and PSC sideboard limits for the BSAI. The basis for these sideboard limits is described in detail in the final rule implementing major provisions of the AFA (67 FR 79692, December 30, 2002). Tables 12 and 13 list the 2005 and 2006 proposed catcher vessel sideboard limits.

All harvests of groundfish sideboard species made by non-exempt AFA catcher vessels, whether as targeted catch or as incidental catch, will be deducted from the 2005 and 2006 proposed sideboard limits listed in Table 12.

TABLE 12—2005 AND 2006 PROPOSED BSAI AMERICAN FISHERIES ACT CATCHER VESSEL SIDEBOARD LIMITS

[Amounts are in metric tons]

Species	Fishery by area/season/processor/gear	Ratio of 1995–1997 AFA CV catch to 1995–1997 TAC	2005 Proposed initial TAC	2005 Proposed catcher vessel sideboard limits	2006 Proposed initial TAC	2006 Proposed catcher vessel sideboard limits
Pacific cod	BSAI	.....	.....	.....	.....	.....
	Jig gear	0.0000	3,671	0	3,664	0
	Hook-and-line CV	.....	.....	.....	.....	.....
	Jan 1 - Jun 10	0.0006	167	0	167	0
	Jun 10 - Dec 31	0.0006	112	0	112	0
	Pot gear CV	.....	.....	.....	.....	.....
	Jan 1 - Jun 10	0.0006	8,380	5	8,363	5
	Sept 1 - Dec 31	0.0006	5,587	3	5,575	3
	CV < 60 feet LOA using hook-and-line or pot gear	0.0006	1,304	1	1,301	1
	Trawl gear CV	.....	.....	.....	.....	.....
	Jan 20 - Apr 1	0.8609	30,195	25,995	30,132	25,941
	Apr 1 - Jun 10	0.8609	4,314	3,323	4,305	3,316
	Jun 10 - Nov 1	0.8609	8,627	6,645	8,609	6,632
Sablefish	BS trawl gear	0.0906	1,028	93	952	86
	AI trawl gear	0.0645	593	38	550	35
Atka mackerel	Eastern AI/BS	.....	.....	.....	.....	.....
	Jig gear	0.0031	96	0	96	0
	Other gear	.....	.....	.....	.....	.....

TABLE 12—2005 AND 2006 PROPOSED BSAI AMERICAN FISHERIES ACT CATCHER VESSEL SIDEBOARD LIMITS—Continued

[Amounts are in metric tons]

Species	Fishery by area/season/processor/gear	Ratio of 1995–1997 AFA CV catch to 1995–1997 TAC	2005 Proposed initial TAC	2005 Proposed catcher vessel sideboard limits	2006 Proposed initial TAC	2006 Proposed catcher vessel sideboard limits
	Jan 1 - Apr 15	0.0032	4,729	15	4,729	15
	Sept 1 - Nov 1	0.0032	4,729	15	4,729	15
	Central AI	.....	.....	.....	.....	.....
	Jan - Apr 15	0.0001	13,218	1	13,218	1
	HLA limit	0.0001	7,931	1	7,931	1
	Sept 1 - Nov 1	0.0001	13,218	1	13,218	1
	HLA limit	0.0001	7,931	1	7,931	1
	Western AI	.....	.....	.....	.....	.....
	Jan - Apr 15	0.0000	8,781	0	8,781	0
	HLA limit	.....	5,269	0	5,269	0
	Sept 1 - Nov 1	0.0000	8,781	0	8,781	0
	HLA limit	.....	5,269	0	5,269	0
Yellowfin sole	BSAI	0.0647	73,164	4,734	73,164	4,734
Rock sole	BSAI	0.0341	35,233	1,201	34,850	1,188
Greenland Turbot	BS	0.0645	2,295	148	2,295	148
	AI	0.0205	680	14	680	14
Arrowtooth flounder	BSAI	0.0690	10,200	704	10,200	704
Alaska plaice	BSAI	0.0441	8,500	375	8,500	375
Other flatfish	BSAI	0.0441	2,550	112	2,550	112
Pacific ocean perch	BS	0.1000	1,635	164	1,655	166
	Eastern AI	0.0077	2,369	18	2,369	18
	Central AI	0.0025	2,257	6	2,286	6
	Western AI	0.0000	3,957	0	4,006	0
Northern rockfish	BSAI	0.0084	4,250	36	4,250	36
Shortraker rockfish	BSAI	0.0037	447	2	447	2
Rougheye rockfish	BSAI	0.0037	166	1	166	1
Other rockfish	BS	0.0048	391	2	391	2
	AI	0.0095	539	5	539	5
Squid	BSAI	0.3827	1,084	415	1,084	415
Other species	BSAI	0.0541	23,124	1,251	23,124	1,251
Flathead Sole	BS trawl gear	0.0505	16,150	816	16,150	816

The AFA catcher vessel PSC limits for halibut and crab species in the BSAI for which a trawl bycatch limit has been established will be a portion of the PSC limit equal to the ratio of aggregate retained groundfish catch by AFA catcher vessels in each PSC target category from 1995 through 1997 relative to the retained catch of all vessels in that fishery from 1995 through 1997. Table 13 lists the 2005 and 2006 proposed PSC sideboard limits for AFA catcher vessels.

Halibut and crab PSC caught by AFA catcher vessels participating in any fishery for groundfish other than pollock listed in Table 13 will accrue against the 2005 and 2006 proposed PSC sideboard limits for the AFA catcher vessels. Regulations at § 679.21(d)(8) and (e)(3)(v) provide authority to close directed fishing for groundfish other than pollock for AFA catcher vessels once a 2005 and 2006 proposed PSC sideboard limit listed in Table 13 is reached. The PSC by AFA catcher vessels, while fishing for pollock in the BSAI, will accrue against the bycatch allowances annually specified for either the midwater pollock or the pollock/Atka mackerel/''other species'' fishery categories under regulations at § 679.21(e)(3)(iv).

TABLE 13—2005 AND 2006 PROPOSED AMERICAN FISHERIES ACT CATCHER VESSEL PROHIBITED SPECIES CATCH SIDEBOARD LIMITS FOR THE BSAI[1]

[Amounts are in metric tons]

PSC species	Target fishery category[2]	Ratio of 1995–1997 AFA CV retained catch to total retained catch	2005 and 2006 Proposed PSC limit	2005 and 2006 Proposed AFA catcher vessel PSC sideboard limit
Halibut	Pacific cod trawl	0.6183	1,434	887

TABLE 13—2005 AND 2006 PROPOSED AMERICAN FISHERIES ACT CATCHER VESSEL PROHIBITED SPECIES CATCH SIDEBOARD LIMITS FOR THE BSAI[1]—Continued

[Amounts are in metric tons]

PSC species	Target fishery category[2]	Ratio of 1995–1997 AFA CV retained catch to total retained catch	2005 and 2006 Proposed PSC limit	2005 and 2006 Proposed AFA catcher vessel PSC sideboard limit
	Pacific cod hook-and-line or pot	0.0022	775	2
	Yellowfin sole	0.1144	886	101
	Rock sole/flathead sole/other flatfish[5]	0.2841	779	221
	Turbot/Arrowtooth/Sablefish	0.2327	0	0
	Rockfish (July 1 - December 31)	0.0245	69	2
	Pollock/Atka mackerel/other species	0.0227	232	5
Red King Crab Zone 1[4]	Pacific cod	0.6183	26,563	16,424
	Yellowfin sole	0.1144	33,843	3,872
	Rock sole/flathead sole/other flatfish[5]	0.2841	121,413	34,493
	Pollock/Atka mackerel/other species	0.0227	406	9
C. opilio COBLZ[3]	Pacific cod	0.6183	124,736	77,124
	Yellowfin sole	0.1144	2,776,981	317,687
	Rock sole/flathead sole/other flatfish[5]	0.2841	969,130	275,330
	Pollock/Atka mackerel/other species	0.0227	72,428	1,644
	Rockfish	0.0245	40,237	986
	Turbot/Arrowtooth/Sablefish	0.2327	40,238	9,363
C. bairdi Zone 1	Pacific cod	0.6183	183,112	113,218
	Yellowfin sole	0.1144	340,844	38,993
	Rock sole/flathead sole/other flatfish[5]	0.2841	365,320	103,787
	Pollock/Atka mackerel/other species	0.0227	17,224	391
C. bairdi Zone 2	Pacific cod	0.6183	324,176	200,438
	Yellowfin sole	0.1144	1,788,459	204,600
	Rock sole/flathead sole/other flatfish[5]	0.2841	596,154	169,367
	Pollock/Atka mackerel/other species	0.0227	27,473	624
	Rockfish	0.0245	10,988	269

[1]Halibut amounts are in metric tons of halibut mortality. Crab amounts are in numbers of animals.
[2]Target fishery categories are defined in regulation at § 679.21(e)(3)(iv).
[3]*C. opilio* Bycatch Limitation Zone. Boundaries are defined at Figure 13 of 50 CFR part 679.
[4]In October 2004, the Council recommended that red king crab bycatch for trawl fisheries within the RKCSS be limited to 35 percent of the total allocation to the rock sole/flathead sole/"other flatfish" fishery category (see § 679.21(e)(3)(ii)(B)).
[5]"Other flatfish" for PSC monitoring includes all flatfish species, except for halibut (a prohibited species), Greenland turbot, rock sole, yellowfin sole, arrowtooth flounder.

Classification

NMFS has determined that the proposed specifications are consistent with the FMP and preliminarily determined that the proposed specifications are consistent with the Magnuson-Stevens Act and other applicable laws.

This action is authorized under 50 CFR 679.20 and is exempt from review under Executive Order 12866.

An IRFA was prepared to evaluate the impacts of the 2005 and 2006 proposed harvest specifications on directly regulated small entities. This IRFA is intended to meet the statutory requirements of the Regulatory Flexibility Act (RFA). The reason for the action, a statement of the objective of the action and the legal basis are discussed in the preamble and are not repeated here.

The 2005 and 2006 harvest specifications establish harvest limits for the groundfish species and species groups in the BSAI. This action is necessary to allow fishing in 2005 and 2006. About 807 small catcher vessels, 23 small catcher/processors, and 6 small private non-profit CDQ groups may be directed regulated by these specifications.

The IRFA examined the impacts of the preferred alternative on small entities within fisheries defined by the harvest of species groups whose TACs might be affected by the specifications. The IRFA identified adverse impacts on small fishing operations harvesting for sablefish and Pacific ocean perch and on CDQ groups in the BSAI.

In the BSAI, 36 small Pacific ocean perch catcher vessels and catcher-processors, with average gross revenues of $1.8 million, would have a gross revenue reduction of a maximum of ⅓ of 1 percent; 63 small sablefish catcher vessels and catcher-processors, with average gross revenues of about $700,000, would have gross revenue reductions of a maximum of 6 percent; and the 6 CDQ groups, with estimated average 2004 gross revenues of about $19.5 million, would have gross revenue reductions of 2/10 of a percent.

Please refer to the IRFA for a fuller explanation of impacts on small entities. A copy of the IRFA is available from NMFS (see **ADDRESSES**).

This regulation does not impose new recordkeeping or reporting requirements on the regulated small entities. This analysis did not reveal any Federal rules that duplicate, overlap, or conflict with the proposed action.

This analysis examined four alternatives to the preferred alternative. These included alternatives that set TACs to produce fishing rates equal to $maxF_{ABC}$, ½$maxF_{ABC}$, the recent 5 year average F, and zero. Only one of these alternatives, setting TACs to produce fishing rates of $maxF_{ABC}$, would potentially have a smaller adverse

impact on small entities than the preferred alternative. This alternative is associated with larger gross revenues for the BSAI fisheries. Many of the vessels identified above would share in these gross revenues. However, the $maxF_{ABC}$ is a fishing rate which may, and often does, exceed biologically recommended ABCs. For the sablefish and Pacific ocean perch fisheries described above, the preferred alternative, which produces fishing rates less than $maxF_{ABC}$, sets TACs equal to projected annual ABCs. In addition, the preferred alternative TACs for ''other rockfish'' in the Aleutian Islands subarea, rougheye rockfish, and shortraker rockfish, also equals the ABC. The increases in TACs related to producing fishing rates of $maxF_{ABC}$ would not be consistent with biologically prudent fishery management because they do not fall within the scientifically determined ABC.

Authority: Authority: 16 U.S.C. 773 *et seq.*, 1801 *et seq.*, and 3631 *et seq.*; 16 U.S.C. 1540(f); Pub. L. 105 277, Title II of Division C; Pub L. 106 31, Sec. 3027; Pub L. 106 554, Sec. 209; and Pub. L. 108–199, Sec. 803.

Dated: December 3, 2004.

William T. Hogarth

Assistant Administrator for Fisheries, National Marine Fisheries Service.

[FR Doc. 04–26952 Filed 12–7–04; 8:45 am]

BILLING CODE 3510–22–S

Notices

Federal Register

Vol. 69, No. 235

Wednesday, December 8, 2004

This section of the FEDERAL REGISTER contains documents other than rules or proposed rules that are applicable to the public. Notices of hearings and investigations, committee meetings, agency decisions and rulings, delegations of authority, filing of petitions and applications and agency statements of organization and functions are examples of documents appearing in this section.

DEPARTMENT OF AGRICULTURE

Commodity Credit Corporation

Request for Approval of a New Information Collection; Long Term Contracting System (LTCS)

AGENCY: Farm Service Agency, Commodity Credit Corporation, USDA.

ACTION: Notice; request for comments.

SUMMARY: In accordance with the Paperwork Reduction Act of 1995 (PRA), the United States Department of Agriculture (USDA), Farm Service Agency (FSA), Kansas City Commodity Office (KCCO) is seeking comments from all interested individuals and organizations regarding a new information collection. This collection is necessary for the procurement of agricultural commodities by KCCO for USDA's domestic feeding programs. Vendors bidding on long-term invitations will complete and submit their offers on-line through LTCS, which will record the system date/time that the offer was submitted and will ensure that the data remains secured within the system until bid opening time.

DATES: Comments on this notice must be received on or before February 7, 2005, to be assured consideration.

FOR FURTHER INFORMATION CONTACT: Comments regarding this information collection requirement may be directed to James Klemp, Acting Chief, Planning and Analysis Division, Kansas City Commodity Office (KCCO), 6501 Beacon Drive, Kansas City, Missouri 64133–4676, telephone (816) 926–6509 or fax (816) 926–1648; e-mail *JEKLEMP@kcc.usda.gov.*

SUPPLEMENTARY INFORMATION:

Title: Long Term Contracting System (LTCS).

OMB Number: 0560–New.

Type of Request: Approval of a new collection.

Abstract: The Long Term Contracting System (LTCS) is a web-based application that streamlines the bid entry and evaluation functions for Long-term, Indefinite-Delivery, Indefinite-Quantity (IDIQ) contracts. KCCO will generally issue invitations for bids to purchase commodities for domestic feeding programs on an annual, semi-annual, quarterly, or monthly basis; however, invitations may be issued more frequently, depending on various program requirements. Bid offers will be received, evaluated, and awarded within LTCS. Interested vendors will submit a price per destination for each product, along with their available capacities per delivery period/month, and their answers to specific certification questions. The information collected will be processed through the LTCS bid evaluation program to determine optimal awards. KCCO will analyze the results of the bid evaluation and award contracts to the eligible, responsible and responsive bidders whose offers are most advantageous to USDA in terms of the lowest overall cost. It is necessary to collect the information in order to evaluate bids impartially. The LTCS will automatically tie together monthly allocation contracts with the applicable long-term contract, and since LTCS will access real-time data, users will be able to access up-to-the-minute contract award information. Vendors can access LTCS on-line prior to bid opening time to submit, modify, or withdraw their offers. The automated process of LTCS will significantly reduce the chance for errors in awards and reduce recordkeeping errors associated with the current manual process of tracking contract data.

Estimate of Burden: Public reporting burden for collecting information under this notice is estimated to average 2 hours per response.

Respondents: Interested vendors; currently, cheese and pudding vendors.

Respondents: 20.

Estimated Number of Annual Responses per Respondent: 2.

Estimated Total Annual Burden on Respondents: 80 hours.

Proposed topics for comment include: (a) Whether the collection of information is necessary for the proper performance of the functions of the agency, including whether the information will have practical utility; (b) the accuracy of the agency's estimate of burden including the validity of the methodology and assumptions used; (c) ways to enhance the quality, utility, and clarity of the information collected; or (d) ways to minimize the burden of the collection of the information on those who are to respond, including through the use of appropriate automated, electronic, mechanical, or other technological collection techniques or other forms of information technology. Comments regarding this information collection requirement may be directed to the Office of Information and Regulatory Affairs, Office of Management and Budget (OMB), Attention: Desk Officer for USDA, Washington, DC 20503, and to James Klemp, Acting Chief, Planning and Analysis Division, Kansas City Commodity Office, 6501 Beacon Drive, Kansas City, Missouri 64133–4676. All comments will become a matter of public record.

OMB is required to make a decision concerning the collection(s) of information contained in these proposed regulations between 30 and 60 days after publication of this document in the **Federal Register.** Therefore, a comment to OMB is best assured of having its full effect if OMB receives it within 30 days of publication.

Signed at Washington, DC, on November 30, 2004.

James R. Little,

Executive Vice President, Commodity Credit Corporation.

[FR Doc. 04–26873 Filed 12–7–04; 8:45 am]

BILLING CODE 3410–05–P

DEPARTMENT OF AGRICULTURE

Food and Nutrition Service

Agency Information Collection Activities: Proposed Collection; Comment Request Form FNS–648, WIC Local Agency Directory Report

AGENCY: Food and Nutrition Service, USDA.

ACTION: Notice.

SUMMARY: In accordance with the Paperwork Reduction Act of 1995, this notice announces the Food and Nutrition Service's (FNS) intention to request an extension for a currently approved information collection, the WIC Local Agency Directory Report.

DATES: Comments on this notice must be received by February 7, 2005.

ADDRESSES: Comments are invited on: (a) Whether the proposed collection of information is necessary for the proper performance of the functions of the agency, including whether the information will have practical utility; (b) the accuracy of the agency's estimate of the burden of the proposed collection of information, including the validity of the methodology and assumptions used; (c) ways to enhance the quality, utility and clarity of the information to be collected; and (d) ways to minimize the burden of the collection of information on those who are to respond, including through the use of appropriate automated, electronic, mechanical, or other technological collection techniques or other forms of information technology.

Comments may be sent to: Patricia N. Daniels, Director, Supplemental Food Programs Division, Food and Nutrition Service, U.S. Department of Agriculture, 3101 Park Center Drive, Room 520, Alexandria, VA 22302.

All responses to this notice will be summarized and included in the request for OMB approval, and will become a matter of public record.

FOR FURTHER INFORMATION CONTACT: Requests for additional information or copies of the information collection form and instructions should be directed to: Patricia N. Daniels, (703) 305–2749.

SUPPLEMENTARY INFORMATION:

Title: WIC Local Agency Directory Report.

OMB Number: 0584–0431.

Expiration Date: 02–28–2005.

Type of Request: Extension of a Currently Approved Collection Form.

Abstract: FNS administers the Special Supplemental Nutrition Program for Women, Infants, and Children (WIC) by awarding cash grants to State agencies (generally State health departments). The State agencies award subgrants to local agencies (generally local health departments and nonprofit organizations) to deliver program benefits and services to eligible participants. FNS maintains a WIC Local Agency Directory which lists the names and addresses of all WIC local agencies. WIC State and local agencies and FNS use the directory to refer individuals to the nearest source of WIC Program services and to maintain continuity of program services to migrant and other transient participants. It is also used as a mailing list to provide local agencies with technical assistance manuals and other information. State agencies complete the WIC Local Agency Directory Report Form to inform FNS when a local agency is newly established, closed or changes its address. This data is needed to keep the directory current.

Estimate of Burden: Public reporting burden for this collection of information is estimated to average 0.17 hours per response, including the time for reviewing instructions, searching existing data sources, gathering and maintaining the data needed, and completing and reviewing the collection of information.

Respondents: Directors or Administrators of WIC State agencies.

Estimated Number of Respondents: 88 respondents.

Estimated Number of Responses per Respondent: One.

Estimated Total Annual Burden on Respondents: 14.96 hours.

Dated: December 2, 2004.

Jerome A. Lindsay,

Acting Administrator, Food and Nutrition Service.

[FR Doc. 04–26864 Filed 12–7–04; 8:45 am]

BILLING CODE 3410–30–P

DEPARTMENT OF AGRICULTURE

Grain Inspection, Packers and Stockyards Administration

[04–AZ–A]

Opportunity for Designation To Provide Official Services in the Southwest Arizona Region

AGENCY: Grain Inspection, Packers and Stockyards Administration (USDA).

ACTION: Notice.

SUMMARY: Farwell Grain Inspection, Inc. (Farwell), has asked GIPSA to amend its designation to remove Maricopa, Pinal and Yuma Counties, Arizona, from their assigned geographic area. GIPSA has also identified the need for service in Santa Cruz County, Arizona. GIPSA is asking persons interested in providing official services in these Arizona counties to submit an application for designation.

DATES: Applications must be postmarked or sent by telecopier (fax) on or before January 7, 2005.

ADDRESSES: We invite you to submit applications and comments on this notice. You may submit applications and comments by any of the following methods:

- *Hand Delivery or Courier:* Deliver to Janet M. Hart, Chief, Review Branch, Compliance Division, GIPSA, USDA, Room 1647–S, 1400 Independence Avenue, SW., Washington, DC 20250.
- *Fax:* Send by facsimile transmission to (202) 690–2755, attention: Janet M. Hart.
- *E-mail:* Send via electronic mail to *Janet.M.Hart@usda.gov.*
- *Mail:* Send hardcopy to Janet M. Hart, Chief, Review Branch, Compliance Division, GIPSA, USDA, STOP 3604, 1400 Independence Avenue, SW., Washington, DC 20250–3604.

Read Applications and Comments: All applications and comments will be available for public inspection at the office above during regular business hours (7 CFR 1.27(b)).

FOR FURTHER INFORMATION CONTACT: Janet M. Hart, at (202) 720–8525, e-mail *Janet.M.Hart@usda.gov.*

SUPPLEMENTARY INFORMATION: This action has been reviewed and determined not to be a rule or regulation as defined in Executive Order 12866 and Departmental Regulation 1512–1; therefore, the Executive Order and Departmental Regulation do not apply to this action.

Farwell has asked GIPSA to remove the southwest Arizona region from its assigned geographic area. The southwest Arizona region consists of the following geographic area, in the State of Arizona: Maricopa, Pinal, and Yuma Counties, Arizona. These counties, along with Santa Cruz County, Arizona, where GIPSA has determined a need for service, are open for designation.

Section 7(f)(1) of the United States Grain Standards Act, as amended (USGSA), authorizes GIPSA Administrator, after determining that there is sufficient need for official services, to designate a qualified applicant to provide official services in a specified area after determining that the applicant is qualified and is better able than any other applicant to provide such official services. GIPSA is asking persons interested in providing official services in the Southwest Arizona region to submit an application for designation. The applicant selected for designation in the Southwest Arizona region will be assigned by GIPSA Administrator according to Section 7(f)(1) of the Act.

Interested persons are hereby given an opportunity to apply for designation to provide official services in the Southwest Arizona region under the provisions of Section 7(f) of the Act and section 800.196(d) of the regulations issued thereunder. Applications and other available information will be considered in determining which applicant will be designated.

Designation in the Southwest Arizona region is for the period beginning about April 1, 2005, and not to exceed 3 years

as prescribed in section 7(g)(1) of the Act. Persons wishing to apply for designation should contact the Compliance Division at the address listed above for forms and information.

Authority: Pub. L 94–582, 90 Stat. 2867, as amended (7 U.S.C. 71 *et seq.*).

Dated: December 2, 2004.

Donna Reifschneider,

Administrator, Grain Inspection, Packers and Stockyards Administration.

[FR Doc. 04–26859 Filed 12–7–04; 8:45 am]

BILLING CODE 3410–EN–P

DEPARTMENT OF AGRICULTURE

Grain Inspection, Packers and Stockyards Administration

[04–A–W]

Designation of Kansas to Provide Class X or Class Y Weighing Services

AGENCY: Grain Inspection, Packers and Stockyards Administration (USDA).

ACTION: Notice.

SUMMARY: GIPSA announces the designation of Kansas Grain Inspection Service, Inc., (Kansas) to provide Class X or Class Y weighing services under the United States Grain Standards Act, as amended (Act).

EFFECTIVE DATE: October 8, 2004.

ADDRESSES: USDA, GIPSA, Janet M. Hart, Chief, Review Branch, Compliance Division, STOP 3604, Room 1647–S, 1400 Independence Avenue, SW., Washington, DC 20250–3604.

FOR FURTHER INFORMATION CONTACT: Janet M. Hart, at 202–720–8525, e-mail *Janet.M.Hart@usda.gov.*

SUPPLEMENTARY INFORMATION: This action has been reviewed and determined not to be a rule or regulation as defined in Executive Order 12866 and Departmental Regulation 1512–1; therefore, the Executive Order and Departmental Regulation do not apply to this action.

In the May 22, 2003, **Federal Register** (68 FR 27983), GIPSA announced the designation of Kansas to provide official inspection services under the Act, effective July 1, 2003, and ending June 30, 2006. Subsequently, Kansas asked GIPSA to amend their designation to include official weighing services. Section 7A(c)(2) of the Act authorizes GIPSA's Administrator to designate authority to perform official weighing to an agency providing official inspection services within a specified geographic area, if such agency is qualified under Section 7(f)(1)(A) of the Act. GIPSA evaluated all available information regarding the designation criteria in Section 7(f)(1)(A) of the Act, and determined that Kansas is qualified to provide official weighing services in their currently assigned geographic area.

Effective June 25, 2004, and terminating June 30, 2006 (the end of Kansas' designation to provide official inspection services), Kansas' present designation is amended to include Class X or Class Y weighing within their assigned geographic area, as specified in the November 22, 2002, **Federal Register** (67 FR 70397). Official services may be obtained by contacting Kansas at 785–233–7063.

Authority: Pub. L. 94–582, 90 Stat. 2867, as amended (7 U.S.C. 71 *et seq.*).

Dated: December 2, 2004.

Donna Reifschneider,

Administrator, Grain Inspection, Packers and Stockyards Administration.

[FR Doc. 04–26858 Filed 12–7–04; 8:45 am]

BILLING CODE 3410–EN–P

DEPARTMENT OF AGRICULTURE

Grain Inspection, Packers and Stockyards Administration

[04–TX–A]

Opportunity for Designation in South Texas

AGENCY: Grain Inspection, Packers and Stockyards Administration, USDA.

ACTION: Notice.

SUMMARY: Grain Inspection, Packers and Stockyards Administration (GIPSA) has received inquiries, and several letters from the grain industry in Texas indicating a need for designating an organization to provide official services in South Texas. GIPSA is asking persons interested in providing official services in unassigned areas of South Texas to submit an application for designation.

DATES: Applications and comments must be postmarked or electronically dated on or before January 7, 2005.

ADDRESSES: We invite you to submit applications and comments on this notice. You may submit applications and comments by any of the following methods:

- Hand Delivery or Courier: Deliver to Janet M. Hart, Chief, Review Branch, Compliance Division, GIPSA, USDA, Room 1647–S, 1400 Independence Avenue, SW., Washington, DC 20250.
- Fax: Send by facsimile transmission to (202) 690–2755, attention: Janet M. Hart.
- E-mail: Send via electronic mail to *Janet.M.Hart@usda.gov.*
- Mail: Send hardcopy to Janet M. Hart, Chief, Review Branch, Compliance Division, GIPSA, USDA, STOP 3604, 1400 Independence Avenue, SW., Washington, DC 20250–3604.

Read Applications and Comments: All applications and comments will be available for public inspection at the office above during regular business hours (7 CFR 1.27(b)).

FOR FURTHER INFORMATION CONTACT: Janet M. Hart at 202–720–8525, e-mail *Janet.M.Hart@usda.gov.*

SUPPLEMENTARY INFORMATION: This Action has been reviewed and determined not to be a rule or regulation as defined in Executive Order 12866 and Departmental Regulation 1512–1; therefore, the Executive Order and Departmental Regulation do not apply to this Action.

Section 7(f)(1) of the United States Grain Standards Act, as amended (Act), authorizes GIPSA's Administrator to designate a qualified applicant to provide official services in a specified area after determining that the applicant is better able than any other applicant to provide such official services.

Section 7(g)(1) of the Act provides that designations of official agencies shall end not later than triennially and may be renewed according to the criteria and procedures prescribed in Section 7(f) of the Act.

GIPSA is asking for applicants to provide official services in South Texas. The South Texas area being considered for assignment to the applicant or applicants selected for designation, pursuant to Section (7)(2) of the Act, is as follows:

Bounded on the north by the northern Jack, Wise, Denton, Collin, Hunt, Delta, Franklin, Titus, Morris, and Marion County line east to the Texas State line;

Bounded on the east by the eastern Texas State line south to the southern Texas State line;

Bounded on the south by the southern Texas State line west to the western Val Verde County line;

Bounded on the west by the western Val Verde, Edwards, Kimble, Mason, San Saba, Mills, Comanche, Erath, Palo Pinto, and Jack County lines north to the northern Jack County line, excluding those export port locations served by GIPSA.

Opportunity for designation. Interested persons are hereby given the opportunity to apply for designation to provide official services in the geographic areas specified above under the provisions of Section 7(f) of the Act and section 800.196(d) of the regulations issued thereunder. Designation in the specified geographic areas is for a period of no more than 3 years. Persons wishing to apply for

designation should contact the Compliance Division at the address listed above for forms and information, or obtain applications at the GIPSA Web site, *http://www.usda.gov/gipsa/oversight/parovreg.htm.*

Applications, comments, and other available information will be considered in determining which applicant will be designated.

Authority: Pub. L. 94–582, 90 Stat. 2867, as amended (7 U.S.C. 71 *et seq.*).

Dated: December 2, 2004.

Donna Reifschneider,

Administrator, Grain Inspection, Packers and Stockyards Administration.

[FR Doc. 04–26857 Filed 12–7–04; 8:45 am]

BILLING CODE 3410–EN–P

DEPARTMENT OF AGRICULTURE

Grain Inspection, Packers and Stockyards Administration

Notice of Request for Extension of a Currently Approved Information Collection

AGENCY: Grain Inspection, Packers and Stockyards Administration, USDA.

ACTION: Notice and request for comments.

SUMMARY: In compliance with the Paperwork Reduction Act of 1995 (44 U.S.C. Chapter 35), Grain Inspection, Packers and Stockyards Administration (GIPSA) is announcing an opportunity for the public to comment on its intention to request an extension for a currently approved information collection, ''Guidelines for Preparation of Research Proposal.'' These guidelines provide instructions for submitting grant proposals requesting funds from GIPSA for research to develop procedures and equipment that may be used to measure grain quality.

DATES: Comments on this notice must be received by February 7, 2005, to be assured of consideration.

ADDRESSES: We invite you to submit comments on this notice. You may submit comments by any of the following methods:

- E-mail: Send comments via electronic mail to *comments.gipsa@usda.gov.*
- Mail: Send hardcopy written comments to Tess Butler, GIPSA, USDA, 1400 Independence Avenue, SW., Room 1647–S, Washington, DC 20250–3604.
- Fax: Send comments by facsimile transmission to: (202) 690–2755.
- Hand Delivery or Courier: Deliver comments to: Tess Butler, GIPSA, USDA, 1400 Independence Avenue, SW., Room 1647–S, Washington, DC 20250–3604.

Instructions: All comments should make reference to the date and page number of this issue of the **Federal Register**.

Background Documents: Information collection package and other documents relating to this action will be available for public inspection in the above office during regular business hours.

Read Comments: All comments will be available for public inspection in the above office during regular business hours (7 CFR 1.27(b)).

FOR FURTHER INFORMATION CONTACT: Steven N. Tanner, Director, Technical Services Division, USDA, GIPSA, FGIS Technical Center, 10383 N. Ambassador Drive, Kansas City, MO 64153–1394; telephone (816) 891–0401.

SUPPLEMENTARY INFORMATION: Under Section 4a of the United States Grain Standards Act (USGSA; 7 U.S.C. 71 *et seq.*), GIPSA is responsible for establishing grain standards which accurately describe the quality of grain being traded and for applying these standards uniformly in a nationwide inspection system. Section 16e of the USGSA authorizes the agency to conduct a continuing research program for the purpose of developing methods to improve accuracy and uniformity in grading grain. To carry out this authority, GIPSA maintains an external research program under which research scientists are invited to submit research grant proposals that include the objectives of the proposed work; application of the proposed work to the grain inspection system; the procedures, equipment, personnel, etc., that will be used to reach the project objectives; the cost of the project; a schedule for completion; qualifications of the investigator and the grantee organization; and a listing of all other sources of financial support for the project. GIPSA utilizes the Guidelines for Preparation of Research Proposals to assist grant applicants with preparation of grant proposals.

Title: Guidelines for Preparation of Research Proposal.

OMB Number: 0580–0014.

Expiration Date of Approval: February 28, 2005.

Type of Request: Extension of a currently approved information collection.

Abstract: The Grain Inspection, Packers and Stockyards Administration is interested in supporting research to develop procedures and equipment that may be used to measure grain quality. The Guidelines for Preparation of Research Proposal provides instructions for submitting grant proposals requesting funds from GIPSA for this purpose.

Estimate of Burden: Public reporting for this collection of information is estimated to average 20 hours per response.

Respondents: Organizations who employ scientists and engineers who do research and development on procedures and equipment that may be used to provide measurement of grain quality.

Estimated Number of Respondents: 2.

Estimated Number of Responses per Respondent: 1.

Estimated Total Annual Burden on Respondents: 40 hours.

Copies of this information collection can be obtained from Cathy McDuffie, the Information Management Specialist, at (301) 734–5190.

Comments: Comments are invited on: (a) Whether the collection of information is necessary for the proper performance of the functions of the agency, including whether the information will have practical utility; (b) the accuracy of the agency's estimate of the burden of the proposed collection of information, including the validity of the methodology and assumptions used; (c) ways to enhance the quality, utility, and clarity of the information to be collected; and (d) ways to minimize the burden of the collection of information on those who are to respond, including through the use of appropriate automated, electronic, mechanical, or other technological collection techniques or forms of information technology. All responses to this notice will be summarized and included in the request for OMB approval. All comments will also become a matter of public record.

Donna Reifschneider,

Administrator, Grain Inspection, Packers and Stockyards Administration.

[FR Doc. 04–26860 Filed 12–7–04; 8:45 am]

BILLING CODE 3410–EN–P

COMMISSION ON CIVIL RIGHTS

Agenda and Notice of a Change to the Public Meeting of the Florida Advisory Committee Which was Published in Federal Register on November 29, 2004 (Doc #) 26264

Notice is hereby given, pursuant to the provisions of the rules and regulations of the U.S. Commission on Civil Rights, that a meeting of the Florida Advisory Committee to the Commission will convene at 8:30 a.m. and adjourn at 1:30 p.m. on December

10, 2004, at the U.S. Small Business Administration, 100 South Biscayne Blvd. 7th fl. Rm. 100, Miami, FL 33131. The purpose of the meeting is to determine what Civil Rights issues will be reviewed as a project.

Persons desiring additional information, or planning a presentation to the Committee, should contact Ivy Davis, Chief of the Regional Programs Coordination Unit, (202) 376–7700 (TDD 202–376–8116). Hearing-impaired persons who will attend the meeting and require the services of a sign language interpreter should contact the Regional Office at least ten (10) working days before the scheduled date of the meeting.

The meeting will be conducted pursuant to the provisions of the rules and regulations of the Commission.

Dated at Washington, DC, December 2, 2004.

Ivy L. Davis,

Chief, Regional Programs Coordination Unit.

[FR Doc. 04–26924 Filed 12–7–04; 8:45 am]

BILLING CODE 6335–01–P

DEPARTMENT OF COMMERCE

Foreign-Trade Zones Board

[Docket 55–2004]

Foreign-Trade Zone 81—Portsmouth, NH, Application for Subzone Status, Millipore Corporation (Polyvinylidene Fluoride Filtering Devices), Jaffrey, NH

An application has been submitted to the Foreign-Trade Zones Board (the Board) by the Pease Development Authority (formerly the New Hampshire State Port Authority), grantee of FTZ 81, requesting special-purpose subzone status for the polyvinylidene fluoride filtering device manufacturing plant of Millipore Corporation (Millipore), located in Jaffrey, New Hampshire. The application was submitted pursuant to the provisions of the Foreign-Trade Zones Act, as amended (19 U.S.C. 81a–81u), and the regulations of the Board (15 CFR Part 400). It was formally filed on November 30, 2004.

The Millipore facility (52 acres/176,000 sq.ft.) is located at 11 Prescott Road in Jaffrey (Cheshire County), New Hampshire. The facility (430 employees) is used to produce polyvinylidene fluoride membrane filtering devices (classified under HTSUS 8421.21, 8421.22, 8421.29, 8421.39.80, 8421.99) under the Durapore® brand for export and the domestic market. The finished filtering devices include centrifugals, capsule filters, pressure/vacuum cartridge filters, tangential flow devices, cassettes, and stacked, cut-disc membrane filters used in the pharmaceutical, electronics, and food/beverage industries. The manufacturing process at the facility involves injection molding, lamination, pleating, trimming, assembly, finishing, testing, and warehousing. The plant has capacity to produce between 500,000 to 900,000 Durapore® filtration devices annually. The foreign-sourced material input to be used in the manufacture of the Durapore® products is polyvinylidene fluoride (PVDF) membrane (classified under HTSUS 3921.19.00, 6.5%), which represents between 70 to 98 percent of finished product material value.

FTZ procedures would exempt Millipore from Customs duty payments on the foreign-origin PVDF used in export production. On its domestic shipment and exports to NAFTA markets, the company would be able to elect the duty rate that applies to finished Durapore® filters (duty free) for the foreign PVDF membrane shipped from the plant as part of the filtration products. Duties would be deferred or reduced on foreign production equipment admitted to the proposed subzone until which time it becomes operational. The application indicates that subzone status would help improve the plant's international competitiveness.

In accordance with the Board's regulations, a member of the FTZ Staff has been designated examiner to investigate the application and report to the Board.

Public comment on the application is invited from interested parties. Submissions (original and three copies) shall be addressed to the Board's Executive Secretary at the following addresses:

1. Submissions via Express/Package Delivery Services: Foreign-Trade Zones Board, U.S. Department of Commerce, Franklin Court Building–4100W, 1099 14th Street, NW., Washington, DC 20005; or,

2. Submissions via the U.S. Postal Service: Foreign-Trade Zones Board, U.S. Department of Commerce, FCB–4100W, 1401 Constitution Ave., NW., Washington, DC 20230.

The closing period for their receipt is February 7, 2005. Rebuttal comments in response to material submitted during the foregoing period may be submitted during the subsequent 15-day period (to February 22, 2005).

A copy of the application will be available for public inspection at the Office of the Foreign-Trade Zones Board's Executive Secretary at address No. 1 listed above and at the Commerce Department's Export Assistance Center, 17 New Hampshire Avenue, Portsmouth, NH 03801.

Dated: November 30, 2004.

Dennis Puccinelli,

Executive Secretary.

[FR Doc. 04–26975 Filed 12–7–04; 8:45 am]

BILLING CODE 3510–DS–P

DEPARTMENT OF COMMERCE

Foreign-Trade Zones Board

[FTZ Dockets 54(1)–54(5)–2004]

Requests for Extension of Authority (Crude Oil Refineries/Petrochemical Complexes)

Requests have been submitted to the Foreign-Trade Zones Board (the Board) by the following grantees, pursuant to § 400.32(b)(1) of the Board's regulations, for a time extension of their authority to elect non-privileged foreign status (NPF) on crude oil used in the production of certain petrochemical feedstocks and refinery by-products at the crude oil refineries/petrochemical complexes of the companies listed below. The requests were formally filed on November 30, 2004.

The FTZ Board has authorized 81 refineries/petrochemical complexes to conduct crude oil/petrochemical product refining activity under FTZ procedures. Fifty-eight of these subzones were approved with an indefinite extension of NPF status on August 24, 2000 (Board Order 1116, 65 FR 52696, 8/30/2000). Such authority involves full access to FTZ procedures for export activity and, with regard to products sold in the U.S., the option to choose NPF status (NPF option) for certain petrochemical feedstocks and refinery by-products. The extension case involved a comprehensive assessment of zone use by the 58 refineries considering their economic and regulatory circumstances. Since then, twelve new refinery subzones have been approved with indefinite NPF authority.

The five refinery/petrochemical subzones listed below were not included in the August 2000 action because their cases were pending during that review and they received approval subject to the following restrictions:

1. Foreign status (19 CFR 146.41, 146.42) products consumed as fuel for the refinery shall be subject to the applicable duty rate.

2. Privileged foreign status (19 CFR 146.41) shall be elected on all foreign merchandise admitted to the subzone, except that non-privileged foreign (NPF) status (19 CFR 146.42) may be elected

on refinery inputs covered under HTSUS Subheadings 2709.00.10, 2709.00.20, 2710.11.25, 2710.11.45, 2710.19.05, 2710.19.10, 2710.19.45, 2710.91.00, 2710.99.05, 2710.99.10, 2710.99.16, 2710.99.21 and 2710.99.45 which are used in the production of:

—certain petrochemical feedstocks and refinery by-products;

—products for export;

—and, products eligible for entry under HTSUS Subheadings 9808.00.30 and 9808.00.40 (U.S. Government purchases).

3. The authority with regard to the NPF option is initially granted until September 30, 2005, subject to extension.

The zone grantees on behalf of the refining/petrochemical facilities listed below are now requesting that the authority for the NPF option (Condition 3) be extended.

The refineries/petrochemical complexes produce fuels and petrochemical feedstocks from crude oil and other inputs, such as naphtha and natural gas condensate. Fuel products include gasoline, jet fuel, distillates, residual fuels, and motor fuel blendstocks. Petrochemical feedstocks and refinery by-products produced under zone procedures (NPF option) have included: benzene, toluene, xylene, naphthalene, natural gas—liquified & gaseous, ethane, propane, butane, ethylene, propylene, butylene, butadiene, paraffin waxes & petroleum jelly, carbon black oil, petroleum coke, asphalt, sulfur, sulfuric acid, cumene, pseudocumene, n-pentane and isopentane, isoprene, dicyclopentadiene, styrene, other aromatic hydrocarbon mixtures, mixtures of hydrocarbons not elsewhere specified, and certain other saturated and unsaturated acyclic and cyclic hydrocarbons. (Although the refining/petrochemical plants vary in their petroleum product slate, the review would generally include the full range of products listed above for all refineries.)

Zone procedures exempt the refineries from Customs duty payments on the foreign products used in exports. On domestic sales, the NPF option allows the companies to choose the Customs duty rates that apply to certain petrochemical feedstocks and refinery by-products (HTSUS duty rates for most of these products are zero) by admitting incoming foreign crude oil and natural gas condensate in non-privileged foreign status. Such petrochemicals and by-products account for about 25 to 30 percent of refinery activity, on average. The duty rates on inputs range from 5.25¢/barrel to 10.5¢/barrel. Duties on inputs used to make fuel products (motor gasoline, jet fuel, blendstocks), which constitute some 70 to 75 percent of production, will continue to be dutiable at the crude oil rate. The applications indicate that the continuation of authority to elect non-privileged foreign status will contribute to the refineries' international competitiveness.

Board order	Subzone	Company	Location	Docket No.
Grantee: Port of Long Beach, California				
1050	50G	Shell Oil Products U.S.	Los Angeles, CA	Doc. 54(1)–04
Grantee: Port of Corpus Christi Authority				
1086	122N	Equistar Chemicals, LP	Nueces Co., TX	Doc. 54(2)–04
Grantee: Port of Freeport, Texas				
1087	149F	Equistar Chemicals, LP	Brazoria Co., TX	Doc. 54(3)–04
1088	149G	Dow Chemical Company	Brazoria Co., TX	Doc. 54(3)–04
Grantee: Board of Harbor Commissioners of the City of Los Angeles				
1032	202C	ConocoPhillips Company	Los Angeles, CA	Fov. 54(5)–04

In accordance with the Board's regulations, a member of the FTZ Staff has been designated examiner to investigate the requests and report to the Board.

Public comment on these proposals is invited from interested parties. Submissions (original and 3 copies) shall be addressed to the Board's Executive Secretary at one of the following addresses:

1. Submissions Via Express/Package Delivery Services: Foreign-Trade-Zones Board, U.S. Department of Commerce, Franklin Court Building—Suite 4100W, 1099 14th St. NW., Washington, DC 20005; or

2. Submissions Via the U.S. Postal Service: Foreign-Trade-Zones Board, U.S. Department of Commerce, FCB—Suite 4100W, 1401 Constitution Ave. NW., Washington, DC 20230.

The closing period for their receipt is February 7, 2005. Rebuttal comments in response to material submitted during the foregoing period may be submitted during the subsequent 15-day period (to February 22, 2005).

Copies of the requests will be available for public inspection at the Office of the Foreign-Trade Zones Board's Executive Secretary at address Number 1 listed above.

Dated: December 2, 2004.

Dennis Puccinelli,

Executive Secretary.

[FR Doc. 04–26974 Filed 12–7–04; 8:45 am]

BILLING CODE 3510–DS–P

DEPARTMENT OF COMMERCE

International Trade Administration

[A–570–893]

Notice of Final Determination of Sales at Less Than Fair Value: Certain Frozen and Canned Warmwater Shrimp From the People's Republic of China

AGENCY: Import Administration, International Trade Administration, Department of Commerce.

EFFECTIVE DATE: December 8, 2004.

FOR FURTHER INFORMATION CONTACT: Alex Villanueva, AD/CVD Operations, Office IX, Import Administration, International Trade Administration, U.S. Department of Commerce, 14th Street and Constitution Avenue NW., Washington, DC 20230; telephone: (202) 482–3208.

Final Determination

We determine that certain frozen and canned warmwater shrimp from the People's Republic of China (''PRC'') is being, or is likely to be, sold in the United States at less than fair value (''LTFV'') as provided in section 735 of Tariff Act of 1930, as amended (''the Act''). The estimated margins of sales at LTFV are shown in the ''Final Determination Margins'' section of this notice.

SUMMARY: On July 16, 2004, the Department of Commerce published its preliminary determination of sales at LTFV, partial affirmative preliminary determination of critical circumstances and postponement of the final determination in the antidumping investigation of certain frozen and canned warmwater shrimp from the PRC. On September 1, 2004, the Department of Commerce published an

amended preliminary determination of sales at less than fair value (''LTFV'').

During the investigation, the Department examined sales information from four shrimp processors that were selected as Mandatory Respondents.[1] In addition, fifty-three companies requested separate rates and we refer to them, collectively, as the Section A Respondents.[2] We invited interested parties to comment on our preliminary determination and amended preliminary determination. Based on our analysis of the comments we received, we have made changes to our calculations for the four Mandatory Respondents. As a result of those changes, the rate assigned to companies which received a separate rate has also changed.

Case History

The Department of Commerce (''Department'') published its preliminary determination in this investigation on June 24, 2004. *See Notice of Preliminary Determination of Sales at Less Than Fair Value, Negative Preliminary Determination of Critical Circumstances and Postponement of Final Determination: Certain Frozen and Canned Warmwater Shrimp from the People's Republic of China*, 69 FR 42654 (July 16, 2004) (''*Preliminary Determination*''). On September 1, 2004, the Department published an amended preliminary determination. *See Notice of Amended Preliminary Antidumping Duty Determination of Sales at Less Than Fair Value: Certain Frozen and Canned Warmwater Shrimp from the People's Republic of China*, 69 FR 53409 (September 1, 2004) (''*Amended Preliminary Determination*'').

Since the publication of the *Preliminary Determination*, the following events have occurred. The Department conducted verification of the Mandatory Respondents: Allied on August 23, and 25 through 27, 2004; Red Garden/Shantou Jinyuan District Mingfeng Quick-Frozen Factory (''Mingfeng'') (one of Red Garden's suppliers during the POI) on August 15 through 19, 2004; Yelin on August 27, and August 31 through September 2, 2004; and Zhanjiang Guolian on August 16 through 20, 2004; and the two Section A Respondents, Meizhou Aquatic Products Quick-Frozen Industry Co., Ltd. (''Meizhou'') on August 23, 2004, and Shantou Ocean Freezing on August 25 through 26, 2004, in the PRC. *See* the ''Verification'' Section below for additional information.

We received comments from the Ad Hoc Shrimp Trade Action Committee, Versaggi Shrimp Corporation and Indian Ridge Shrimp Company, hereinafter referred to collectively as ''Petitioners'', a number of respondents and other interested parties to this investigation that addressed issues including: Mandatory Respondent Selection; Section A Respondents; Scope; and other issues.

On October 19, 2004, parties submitted case briefs. On October 26, 2004, parties submitted rebuttal briefs. On November 5, 2004, the Department held a public hearing in accordance with section 351.310(d)(l) of the Department's regulations. Representatives for the Mandatory and Section A Respondents, the Petitioners, the PRC government and the PRC Chamber of Commerce were in attendance. On November 23, 2004, the Department convened a public hearing on scope issues.

Mandatory Respondents

On July 16, 2004, the following companies submitted sales reconciliation documentation: Zhangjian Guolian; Yelin[3]; Allied; and Red Garden. On July 27, 2004, the Department sent the 4th supplemental questionnaires addressing certain deficiencies in Section C and D responses to: Allied, Zhanjiang Guolian, Red Garden and Yelin.

On July 28, 2004, the Department granted Zhanjiang Guolian's request for an extension to submit surrogate value data with an extension until August 4, 2004. On July 29, 2004, the Department documented the submission of new information by Allied. *See Memorandum to the File from Julia Hancock Regarding the Submission of New Information* (July 29, 2004).

On August 2, 2004, the Department received and granted an extension request from Red Garden for submitting its supplemental questionnaire response. On August 3, 2004, the Department received and granted an extension request from Zhanjiang Guolian for responding to the Department's supplemental questionnaire. On August 3, 2004, the Department received the 4th supplemental questionnaire response from Allied and the Department also received Yelin's response to the

[1] Allied Pacific Food (Dalian) Co., Ltd., Allied Pacific (H.K.) Co., Ltd., King Royal Investments, Ltd., Allied Pacific Aquatic Products (Zhanjiang) Co., Ltd., and Allied Pacific Aquatic Products (Zhongshan) Co., Ltd. (collectively, ''Allied''), Yelin Entprise Co. Hong Kong (''HK Yelin'') and its suppliers, Shantou Yelin Frozen Seafood Co., Ltd., Yangjiang City Yelin Hoi Tat Quick Frozen Seafood Co., Ltd., and Fuqing Yahua Aquatic Food Co., Ltd. (collectively, ''Yelin''), Shantou Red Garden Foodstuff Co., Ltd. (''Red Garden'') and Zhanjiang Guolian Aquatic Products Co., Ltd. (''Zhanjiang Guolian'').

[2] Asian Seafoods (Zhanjiang) Co., Ltd. (''Asian Seafoods''); Beihai Zhengwu Industry Co., Ltd. (''Beihai Zhengwu''); Chaoyang Qiaofeng Group Co., Ltd. (''Shantou/Chaoyang Qiaofeng'' (Group) Co., Ltd.) (''Shantou/Chaoyang Qiaofeng''); Chenghai Nichi Lan Food Co., Ltd.; Dalian FTZ Sea-Rich International Trading Co., Ltd. (''Dalian FTZ Sea-Rich''); Dongri Aquatic Products Freezing Plants (''Dongri Aquatic''); Fuqing Dongwei Aquatic Products Industry Co., Ltd. (''Fuqing Dongwei''); Fuqing Longwei Aquatic Foodstuff Co., Ltd. (Longwei Aquatic Foodstuff Co., Ltd.) (''Fuqing Longwei''); Gallant Ocean (Liangiang) Co., Ltd. (''Gallant Ocean''); Hainan Fruit Vegetable Food Allocation Co., Ltd. (''Hainan Fruit Vegetable Food''); Hainan Golden Spring Foods Co., Ltd./Hainan Brich Aquatic Products Co., Ltd. (''Hainan Golden''); Jinfu Trading Co., Ltd. (''Jinfu Trading''); Kaifeng Ocean Sky Industry Co., Ltd. (''Kaifeng''); Leizhou Zhulian Frozen Food Co., Ltd. (''Leizhou Zhulian''); Meizhou Aquatic Products Quick-Frozen Industry Co., Ltd./Shengping Shantou (''Meizhou''); Pingyang Xinye Aquatic Products Co., Ltd. (''Pingyang Xinye''); Savvy Seafood Inc. (''Savvy''); Shanghai Linghai Fisheries Economic & Trading Co., Ltd. (''Shanghai Linghai''); Shanghai Taoen International Trading Co., Ltd. (''Shanghai Taoen''); Shantou Freezing Aquatic Product Food Stuffs Co. (''Shantou Freezing''); Shantou Jinhang Aquatic Industry Co., Ltd. (''Shantou Jinhang''); Shantou Jinyuan District Mingfeng Quick-Frozen Factory (''Mingfeng''); Shantou Ocean Freezing Industry & Trade General Corporation (''Shantou Ocean''); Shantou Ruiyuan Industry Co., Ltd. (''Shantou Ruiyuan''); Shantou Sez Xu Hao Fastness Freeze Aquatic Factory Co., Ltd. (''Shantou Sez Xuhao''); Shantou Shengping Oceanstar Business Co., Ltd. (''Shantou Shengping Oceanstar''); Shantou Wanya Food Factory Co., Ltd. (''Shantou Wanya''); Shantou Yuexing Enterprise Company (''Shantou Yuexing''); Taizhou Zhonghuan Industrial Co., Ltd. (''Taizhou Zhonghuan''); Xuwen Hailang Breeding Co., Ltd. (''Xuwen Hailang''); Yantai Wei-Cheng Food Co., Ltd. (''Yantai Wei-Cheng''); Zhangjiang Bobogo Ocean Co., Ltd. (''Zhanjiang Bobogo''); Zhangjiang Newpro Food Co., Ltd. (''Zhanjiang Newpro''); Zhanjiang Evergreen Aquatic Product Science and Technology Co., Ltd. (''Zhanjiang Evergreen''); Zhanjiang Go-Harvest Aquatic Products Co. Ltd. (''Zhanjiang Go-harvest''); Zhanjiang Runhai Foods Co., Ltd. (''Zhanjiang Runhai''); Zhanjiang Universal Seafood Corp. (''Zhanjiang Universal''); Zhejiang Cereals, Oils & Foodstuffs Import & Export Co., Ltd. (''Zhejiang Cereals''); Zhejiang Daishan Baofa Aquatic Product Co., Ltd. (''Daishan''); Zhejiang Evernew Seafood Corp., Ltd. (''Zhejiang Evernew''); Zhejiang Taizhou Lingyang Aquatic Products Co, Ltd. (''Lingyang''); Zhejiang Zhenglong Foodstuffs Co., Ltd. (''Zhejiang Zhenlong''); Zhoushan Cereals, Oils & Foodstuffs Import & Export Co., Ltd. (''Zhoushan Cereals''); Zhoushan Diciyuan Aquatic Products Co., Ltd. (''Zhoushan Diciyuan''); Zhoushan Haichang Food Co., Ltd. (''Zhoushan Haichang''); Zhoushan Huading Seafood Co., Ltd. (''Zhoushan Huading''); Zhoushan Industrial Co., Ltd. (''Zhoushan Industrial''); Zhoushan Lizhou Fishery Co., Ltd. (''Zhoushan Lizhou''); Zhoushan Putuo Huafa Sea Products Co., Ltd. (''Zhoushan Putuo''); Zhoushan Xifeng Aquatic Co., Ltd. (''Zhoushan Xifeng''); Zhoushan Zhenyang Developing Co., Ltd. (''Zhoushan Zhenyang''); and ZJ CNF Sea Products Engineering Ltd./CNF Zhangjiang (Tong Lian) (''ZJ CNF Sea Products'').

[3] Yelin Enterprise Co. Hong Kong, a Hong Kong exporter of subject merchandise and its wholly or partially owned subsidiaries, Shantou Yelin Frozen Seafood Co. (Shantou, China), Yangjiang City Yelin Hoi Tat Quick Frozen Seafood Co., Ltd. (Hailing, China), and Fuqing Yihua Aquatic Food Co., Ltd. (Fujing China), Chinese producers and/or resellers of merchandise subject to this investigation, and Ocean Duke Corporation, the U.S. importing and resale affiliate of HK Yelin (collectively referred to as ''Yelin,'' unless otherwise identified).

Department's 2nd supplemental Section A questionnaire.

On August 4, 2004, the Department received Meizhou's request for an extension of the deadline to respond to the Department's request for submission of a sales reconciliation package. The Department granted this request on August 6, 2004. The Department also received Zhanjiang Guolian's response to the Department's 4th supplemental questionnaire dated July 27, 2004.

On August 9, 2004, the Department received Yelin's supplemental information prior to verification and Meizhou's sales reconciliation information. The Department also sent verification outlines to Zhanjiang Guolian, Allied, Meizhou, Shantou Ocean, and Red Garden and its suppliers, Mingfeng and Shantou Longfeng Foodstuff Co., Ltd. (''Longfeng'').

On August 11, 2004, the Department received Petitioners' pre-verification comments regarding Red Garden and Zhanjiang Guolian. On August 12, 2004, the Department received Allied's, Yelin's and Red Garden's supplemental questionnaire responses.

On August 16, 2004, the Department received Yelin's 3rd supplemental questionnaire response, Red Garden's and Zhanjiang Guolian's pre-verification corrections and a notice of intent to participate in the hearing from Petitioners. On August 17, 2004, the Department received Petitioners' pre-verification comments regarding Meizhou. On August 19, 2004, the Department sent a verification agenda outline to Yelin and its suppliers. On August 20, 2004, the Department received Petitioners' pre-verification comments regarding Yelin.

On August 26, 2004, the Department received a letter from Yelin requesting that their August 9, 2004 submission be removed from the record. On August 31, 2004, the Department received corrections to Allied's pre-verification corrections and revisions to Yelin's August 9, 2004 submission. On September 7, 2004, the Department received revised exhibits from Yelin to its August 9, 2004 submission.

On September 8, 2004, the Department received Zhanjiang Guolian's, Allied's, Yelin's Red Garden's and Petitioners' surrogate value data, as well as additional surrogate information from the Mandatory Respondents. On September 15, 2004, the Department received Petitioners' comments on Yelin's September 7, 2004 submission. On September 16, 2004, the Department removed Yelin's September 7, 2004 submission from the record.

On September 20, 2004, the Department received Zhanjiang Guolian's, Allied's and Yelin's additional factual information. On September 20, 2004, the Department received Petitioners' factual information rebuttal to the respondents' data as well as a request for an extension of the briefing schedule. On September 22, 2004, the Department released verification reports for Meizhou, Red Garden, Mingfeng, and Shantou Ocean. On September 24, 2004, the Department released the verification reports for Allied and Zhanjiang Guolian. On October 12, 2004, the Department released Yelin's verification report.

On November 8, 2004, the Department sent letters to Zhanjiang Guolian, Allied and Yelin concerning the verifications of those companies. On November 23, 2004, Petitioners submitted comments on Red Garden's November 19, 2004 response, arguing that Red Garden submitted more than minor corrections.

Section A Respondents

On July 19, 2004, the following companies submitted new factual information regarding their separate rates claim: Shantou Yuexing; Zhanjiang Go-Harvest, Shantou/Chaoyang Qiaofeng, Zhanjiang Runhai, Fuqing Longwei, Shantou Jinhang; Zhanjiang Evergreen; and Fuqing Dongwei. On July 21, 2004, the Department sent out second supplemental Section A questionnaires to the following respondents: Shantou Ocean, Beihai Zhengwu, Zhoushan Lizhou, Zhoushan Cereals, Zhanjiang Bobogo, Yantai Wei-Cheng, Shantou/Chaoyang Qiaofeng, Dongri Aquatic, Shantou Yuexing, Zhanjiang Newpro, Zhoushan Huading, Pingyang Xinye and Xuwen Hailang.

On July 26, 2004, the Department received a request for an extension of time to answer the Department's 2nd supplemental Section A questionnaire from Beihai Zhengwu. On July 28, 2004, the Department received extension requests from GDLSK Respondents.[4]

On August 2, 2004, the Department sent 2nd supplemental Section A questionnaires to the following companies: Shantou Ocean, Shantou/Chaoyang Qiaofeng, Xuwen Hailang, and the Department sent and received 2nd supplemental Section A questionnaire responses the same day from Dongri Aquatic, Shantou Freezing, Zhanjiang Newpro and Shantou Yuexing. On August 4, 2004, the Department received 2nd supplemental Section A responses from Zhoushan Cereals, Zhoushan Lizhou, Zhoushan Hauding, Pingyang Xinye, Yantai Wei-Cheng and Beihai Zhengwu. On August 4, 2004, the Department received Zhanjiang Bobogo's 2nd supplemental Section A response.

On September 3, 2004, the Department received case briefs from the following exporters who did not receive a separate rate in the *Preliminary Determination*: Shantou/Chaoyang Qiaofeng, Fuqing Dongwei, Fuqing Longwei, Leizhou Zhulian, Shantou Freezing, Shantou Jinhang, Shantou Ruiyuan, Zhanjiang Evergreen, Zhanjiang Go-harvest, and Zhanjiang Runhai. On October 18, 2004, the Department received Hainan Golden's case brief.

On October 19, 2004, the Department received case briefs from: Jinfu Trading, Zhangjian Guolian, Zhoushan Haichang, Asian Seafoods, Shantou Sez Xuhao, Zhejiang Evernew, Zhejiang Zhenglong, Zhoushan Industrial, Zhoushan Putuo, Zhoushan Xifeng, Daishan, Zhoushan Zhenyang, Yelin, Allied, Lingyang, Kaifeng, Shanghai Linghai, Zhoushan Diciyuan, Red Garden, Zhejiang Cereals, Taizhou Zhonghuan and Petitioners. On October 26, 2004, the Department received rebuttal briefs from Savvy, Zhanjiang Bobogo, Jinfu Trading, Zhangjian Guolian, Zhoushan Haichang, Zhejiang Evernew, Zhejiang Zhenglong, Zhoushan Industrial, Zhoushan Putuo, Zhoushan Xifeng, Daishan, Zhoushan Zhenyang, Yelin, Allied, Lingyang, Kaifeng, Shanghai Linghai, Zhoushan Diciyuan, Zhejiang Cereals, Taizhou Zhonghuan, Meizhou, Mingfeng, and Longfeng. On November 19, 2004, the Department received Red Garden's post-verification response.

Scope Comments by Interested Parties

On July 16, 2004, the Department received a scope exclusion request on behalf of Xian-Ning Seafood Co. Ltd. (''Xian-Ning'') asking the Department to determine whether shrimp scampi is outside the scope of the antidumping investigation. On August 2, 2004, the Department received scope comments from Eastern Fish/Long John Silver (''Eastern Fish/LJS''). On September 24, 2004, the Department received Lee Kum Kee's request to determine whether shrimp sauce is outside the scope of this investigation. The Department scheduled a scope hearing for November 8, 2004, but postponed the hearing until November 23, 2004. On October 20, 2004, the Department received case briefs regarding dusted shrimp from Eastern Fish/LJS and Xian-Ning and also received a notice of intent from them to participate in the hearing. On October 25, 2004, the Department received a rebuttal brief from Eastern

[4] Allied and Yelin (collectively ''GDLSK Respondents'').

Fish/LJS. On November 2, 2004, the Department received a letter from the American Breaded Shrimp Processors Association (''ABSPA'') objecting to the decision to cancel the hearing on scope issues. On November 4, 2004, the Department also sent a letter to ABSPA notifying them that they did not submit any case or rebuttal briefs in the scope issues and that they could not make any presentations in the scope hearing because they did not submit any case or rebuttal briefs. On November 18, 2004, Department officials met with Petitioners on the appropriate surrogate values for raw shrimp and whether or not to exclude dusted and battered shrimp from the scope of the investigations involving all of the countries in the shrimp investigations (Brazil, Ecuador, India, Thailand, PRC and Vietnam). On November 22, 2004, Department of Commerce officials met with representatives of Xian-Ning, to discuss their scope exclusion request for shrimp scampi.

Analysis of Comments Received

The issue of separate rates raised in the case and rebuttal briefs by parties in this investigation are addressed in the Final Separate Rates Memorandum, dated November 29, 2004 (''*Final Separate Rates Memorandum*''), which is hereby adopted by this notice. The various scope issues are discussed in the ''Scope Comments'' section of this notice and the separate scope memoranda referenced in that section. All other issues raised in the case and rebuttal briefs by parties in this investigation are addressed in the Issues and Decision Memorandum, dated November 29, 2004, which is hereby adopted by this notice (''*Decision Memorandum*''). A list of the issues which parties raised and to which we respond in the *Decision Memorandum* is attached to this notice as an Appendix. The *Decision Memorandum* is a public document and is on file in the Central Records Unit (''CRU''), Main Commerce Building, Room B–099, and is accessible on the Web at *http://ia.ita.doc.gov/*. The paper copy and electronic version of the memorandum are identical in content.

Scope Comments

On November 29, 2004, the Department made a scope determination with respect to Lee Kum Kee's shrimp sauce. *See Memorandum from Edward C. Yang, Vietnam/NME Unit Coordinator, Import Administration to Barbara E. Tillman, Acting Deputy Assistant Secretary for Import Administration, Antidumping Investigation on Certain Frozen and Canned Warmwater Shrimp from Brazil, Ecuador, India, Thailand, the Socialist Republic of Vietnam and the Socialist Republic of Vietnam: Scope Clarification on Lee Kum Kee's Shrimp Sauce (''Shrimp Sauce Scope Memo*''), dated November 29, 2004. Based on the information presented by interested parties, the Department determines that Lee Kum Kee's shrimp sauce is excluded from the scope of this investigation. *See Shrimp Sauce Scope Memo* at 8.

On November 29, 2004, the Department made a scope determination with respect to shrimp scampi. *See Memorandum from Edward C. Yang, Vietnam/NME Unit Coordinator, Import Administration to Barbara E. Tillman, Acting Deputy Assistant Secretary for Import Administration, Antidumping Investigation on Certain Frozen and Canned Warmwater Shrimp from Brazil, Ecuador, India, Thailand, the Socialist Republic of Vietnam and the Socialist Republic of Vietnam: Scope Clarification on Shrimp Scampi* (''*Shrimp Scampi Scope Memo*''), dated November 29, 2004. Based on the information presented by interested parties, the Department determines that shrimp scampi is included in the scope of this investigation. *See Shrimp Scampi Scope Memo* at 8.

Additionally, on November 29, 2004, the Department made a scope determination with respect to dusted shrimp and battered shrimp. *See Memorandum from Edward C. Yang, Vietnam/NME Unit Coordinator, Import Administration to Barbara E. Tillman, Acting Deputy Assistant Secretary for Import Administration, Antidumping Investigation on Certain Frozen and Canned Warmwater Shrimp from Brazil, Ecuador, India, Thailand, the Socialist Republic of Vietnam and the Socialist Republic of Vietnam: Scope Clarification on Dusted Shrimp and Battered Shrimp (''Dusted/Battered Scope Memo2*''), dated November 29, 2004. Based on the information presented by interested parties, the Department determines that (1) certain dusted shrimp, produced from fresh (or thawed-from-frozen) and peeled shrimp to which a ''dusting'' layer of rice or wheat flour of at least 95 percent purity has been applied so that the entire surface of the shrimp flesh is thoroughly and evenly coated with the flour and the non-shrimp content of the end product constitutes between 4 to 10 percent of the product's total weight after being dusted, but prior to being frozen and is subjected to individually quick frozen freezing immediately after application of the dusting layer; and (2) battered shrimp, when dusted in accordance with the definition of dusting, coated with a wet viscous layer containing egg and/or milk, and par-fried are excluded from the scope of this investigation. *See Dusted/Battered Scope Memo* at 28.

Scope of Investigation

The scope of this investigation includes certain warmwater shrimp and prawns, whether frozen or canned, wild-caught (ocean harvested) or farm-raised (produced by aquaculture), head-on or head-off, shell-on or peeled, tail-on or tail-off,[5] deveined or not deveined, cooked or raw, or otherwise processed in frozen or canned form.

The frozen or canned warmwater shrimp and prawn products included in the scope of the investigations, regardless of definitions in the Harmonized Tariff Schedule of the United States (''HTSUS''), are products which are processed from warmwater shrimp and prawns through either freezing or canning and which are sold in any count size.

The products described above may be processed from any species of warmwater shrimp and prawns. Warmwater shrimp and prawns are generally classified in, but are not limited to, the *Penaeidae* family. Some examples of the farmed and wild-caught warmwater species include, but are not limited to, whiteleg shrimp (*Penaeus vannemei*), banana prawn (*Penaeus merguiensis*), fleshy prawn (*Penaeus chinensis*), giant river prawn (*Macrobrachium rosenbergii*), giant tiger prawn (*Penaeus monodon*), redspotted shrimp (*Penaeus brasiliensis*), southern brown shrimp (*Penaeus subtilis*), southern pink shrimp (*Penaeus notialis*), southern rough shrimp (*Trachypenaeus curvirostris*), southern white shrimp (*Penaeus schmitti*), blue shrimp (*Penaeus stylirostris*), western white shrimp (*Penaeus occidentalis*), and Indian white prawn (*Penaeus indicus*).

Frozen shrimp and prawns that are packed with marinade, spices or sauce are included in the scope of this investigation. In addition, food preparations, which are not ''prepared meals,'' that contain more than 20 percent by weight of shrimp or prawn are also included in the scope of this investigation.

Excluded from the scope are (1) breaded shrimp and prawns (1605.20.10.20); (2) shrimp and prawns generally classified in the *Pandalidae* family and commonly referred to as coldwater shrimp, in any state of processing; (3) fresh shrimp and prawns

[5] ''Tails'' in this context means the tail fan, which includes the telson and the uropods.

whether shell-on or peeled (0306.23.00.20 and 0306.23.00.40); (4) shrimp and prawns in prepared meals (1605.20.05.10); and (5) dried shrimp and prawns.

The products covered by this investigation are currently classified under the following HTSUS subheading: 0306.13.00.03, 0306.13.00.06, 0306.13.00.09, 0306.13.00.12, 0306.13.00.15, 0306.13.00.18, 0306.13.00.21, 0306.13.00.24, 0306.13.00.27, 0306.13.00.40, 1605.20.10.10, 1605.20.10.30, and 1605.20.10.40. These HTSUS subheadings are provided for convenience and for customs purposes only and are not dispositive, but rather the written descriptions of the scope of this investigation is dispositive.

The Department has issued nine decisions regarding the scope of the merchandise covered by this investigation: (1) On May 21, 2004, the Department declined to expand the scope of this investigation to include fresh (never frozen) shrimp; (2) on July 2, 2004, pursuant to a request from Ocean Duke, the Department found that its ''Seafood Mix'' is excluded from the scope of this investigation; (3) on July 2, 2004, the Department found that salad shrimp, sold in counts of 250 pieces or higher, are included within the scope of the this investigation; (4) on July 2, 2004, the Department found *Macrobrachium Rosenbergii* and organic shrimp included within the scope of this investigation; (5) on July 2, 2004, the Department found that peeled shrimp are included within the scope of this investigation; (6) on November 29, 2004, the Department found that shrimp sauce is excluded from the scope of this investigation; (7) on November 29, 2004, the Department found Xian-Ning Seafood Co., Ltd.'s scampi shrimp included within the scope of this investigation; (8) on November 29, 2004, the Department found certain dusted shrimp [6] are outside the scope of this investigation; and (9) on November 29, 2004, the Department found certain battered shrimp [7] are outside the scope of this investigation.

Verification

As provided in section 782(i) of the Act, we verified the information submitted by the Mandatory Respondents and certain Section A Respondents for use in our final determination. *See* the Department's verification reports on the record of this investigation in the CRU with respect to Allied, Red Garden, Yelin, Zhanjiang Guolian, Shantou Ocean, and Meizhou. For all verified companies, we used standard verification procedures, including examination of relevant accounting and production records, as well as original source documents provided by the respondents.

Period of Investigation

The period of investigation (''POI'') is April 1, 2003, through September 30, 2003. This period corresponds to the two most recent fiscal quarters prior to the month of the filing of the petition. *See* Section 351.204(b)(1) of the Department's regulations.

Surrogate Country

In the *Preliminary Determination,* we stated that we had selected India as the appropriate surrogate country to use in this investigation for the following reasons: (1) India is at a level of economic development comparable to that of the PRC; (2) Indian manufacturers produce comparable merchandise and are significant producers of frozen and canned warmwater shrimp; (3) India provides the best opportunity to use appropriate, publicly available data to value the factors of production. *See Preliminary Determination*, 69 FR at 42678; and *see Memorandum from Ron Lorentzen to James Doyle: Antidumping Duty Investigation on Certain Frozen and Canned Warmwater Shrimp from the People's Republic of China*, dated March 10, 2004. We received no comments from interested parties concerning our selection of India as the surrogate country. For the final determination we have determined to continue to use India as the surrogate country and, accordingly, have calculated normal value using Indian prices to value the respondents' factors of production, when available and appropriate. We have obtained and relied upon publicly available information wherever possible. For a detailed description of the surrogate values that have changed as a result of comments the Department has received, *see Final Surrogate Value Memorandum* (November 29, 2004).

Separate Rates

In the *Preliminary Determination* and the *Amended Preliminary Determination* the Department found that several companies which provided responses to Section A of the antidumping questionnaire were eligible for a rate separate from the PRC-wide rate. For the final determination, we have determined that additional companies have qualified for separate-rate status. *See Final Separate Rates Memorandum*. For a complete listing of all the companies that received a separate rate, see the ''Final Determination Margins'' section below.

As discussed below, the Department applied adverse facts available with respect to Meizhou, because we have determined that Meizhou did not provide verifiable information to support its request for a separate rate. Accordingly, Meizhou has not overcome the presumption that it is part of the PRC-wide entity and its entries will be subject to the PRC-wide rate.

The margin we calculated in the *Preliminary Determination* for the companies receiving a separate rate was 49.09 percent. Because the rates of the selected Mandatory Respondents have changed since the *Preliminary Determination* and the *Amended Preliminary Determination*, we have recalculated the rate for Section A Respondents that are eligible for a separate rate. The rate is 55.23 percent. *See Memorandum to the File from John D. A. LaRose, Calculation of Section A Rates*, dated November 29, 2004.

Critical Circumstances

For this final determination there have been no changes to the preliminary affirmative critical circumstances determinations. As such, the Department continues to find that critical circumstances exist for the following entities: Allied, Yelin, all the Section A Respondents granted a separate rate, and the PRC-wide entity. Additionally, for this final determination we continue to find that critical circumstances do not exist with regard to imports of certain frozen and canned warmwater shrimp from the PRC for Zhanjiang Guolian or Red Garden. For further details regarding the Department's critical circumstances analysis from the *Preliminary*

[6] Dusted shrimp is a shrimp-based product that (1) Is produced from fresh (or thawed-from-frozen) and peeled shrimp; (2) To which a ''dusting'' layer of rice or wheat flour of at least 95 percent purity has been applied; (3) So that the entire surface of the shrimp flesh is thoroughly and evenly coated with the flour; and (4) The non-shrimp content of the end product constitutes between 4 to 10 percent of the product's total weight after being dusted, but prior to being frozen; and (5) Is subjected to IQF freezing immediately after application of the dusting layer. *See Memorandum from Edward C. Yang, NME Unit Coordinator, Import Administration to Barbara E. Tillman, Acting Deputy Assistant Secretary for Import Administration Antidumping Investigation on Certain Frozen and Canned Warmwater Shrimp from Brazil, Ecuador, India, Thailand, the Socialist Republic of Vietnam and the Socialist Republic of Vietnam: Scope Clarification on Dusted Shrimp and Battered Shrimp* (''Dusted/Battered Scope Memo2''), dated November 29, 2004.

[7] Battered shrimp is a shrimp based product that, when dusted in accordance with the definition of dusting above, is coated with a wet viscous layer containing egg and/or milk, and par-fried.

Determination, please see the *Memo from Edward C. Yang, Office Director to Jeffrey A. May, Deputy Assistant Secretary for Import Administration, Regarding the Antidumping Duty Investigation of Certain Frozen and Canned Warmwater Shrimp from the People's Republic of China—Partial Affirmative Preliminary Determination of Critical Circumstances*, dated July 2, 2004.

On October 6, 2004, Lingyang submitted three years of its company-specific export data for the Department's critical circumstances analysis. However, because the Department has determined that Lingyang is not entitled to a separate rate and continues to be part of the PRC-wide entity, we have not considered this data for the final determination. *See Final Determination for Sales at Less than Fair Value Investigation of Certain Frozen and Canned Warmwater Shrimp from the People's Republic of China: Section A Respondents Issues Memorandum from Julia Hancock, Case Analyst through James C. Doyle, Edward C. Yang (''Final Section A Respondent Memo*''), dated November 29, 2004 at Attachment II.

The PRC-Wide Rate

Because we begin with the presumption that all companies within a non market-economy (''NME'') country are subject to government control and because only the companies listed under the ''Final Determination Margins'' section below have overcome that presumption, we are applying a single antidumping rate—the PRC-wide rate—to all other exporters of subject merchandise from the PRC. Such companies did not demonstrate entitlement to a separate rate. *See, e.g., Final Determination of Sales at Less Than Fair Value: Synthetic Indigo from the People's Republic of China*, 65 FR 25706 (May 3, 2000). The PRC-wide rate applies to all entries of subject merchandise except for entries from the respondents which are listed in the ''Final Determination Margins'' section below (except as noted). The information used to calculate this PRC-wide rate was corroborated independently with some small changes in accordance with section 776(c) of the Act. *See Memorandum to the File from Alex Villanueva, Senior Case Analyst through James C. Doyle, Program Manager and Edward C. Yang, Director, NME Unit, Preliminary Determination in the Investigation of Certain Frozen and Canned Warmwater Shrimp from the People's Republic of China, Corroboration Memorandum* (''*Corroboration Memo*''), (July 2, 2004).

Facts Available

Red Garden's Partial Adverse Facts Available

For the final determination, the Department is applying partial facts available to Red Garden regarding a portion of its sales produced by Meizhou because it failed to provide the factors of production (''FOP'') data that the Department had requested, in accordance with section 776(a)(2)(A) of the Act.

Section 776(a)(2) of the Act provides that if an interested party: (A) Withholds information that has been requested by the Department; (B) fails to provide such information in a timely manner or in the form or manner requested, subject to subsections 782(c)(1) and (e) of the Act; (C) significantly impedes a determination under the antidumping statute; or (D) provides such information but the information cannot be verified, the Department shall, subject to subsection 782(d) of the Act, use facts otherwise available in reaching the applicable determination.

In its August 5, 2004 submission and subsequent rebuttal brief, Red Garden chronicled its various attempts to obtain FOP information from Meizhou pertaining to its purchases of subject merchandise during the POI. However, at the Department's verification of Meizhou, the current ownership provided an inconsistent account of Red Garden's attempt to obtain this information from what Red Garden had previously reported to the Department. *See Red Garden's August 5, 2004 Supplemental Questionnaire Response* at Exhibit 1. On the basis of these inconsistent accounts of Red Garden's efforts, we find that Red Garden withheld information that had been requested by the Department and provided unverifiable information.

Furthermore, in accordance with section 776(b) of the Act, the Department found that Red Garden failed to cooperate to the best of its ability to comply with the Department's request for information, and, therefore, finds an adverse inference is warranted in determining the facts otherwise available.

During the time period that Meizhou completed its own responses, company officials had access to the records needed by Red Garden. *See Memorandum from John D.A. LaRose to Alex Villanueva, Acting Program Manager, regarding Verification of Sales and Factors of Production for Meizhou Aquatic Shantou Ocean Freezing Antidumping Duty Investigation of Certain Canned and Frozen Warmwater Shrimp from the People's Republic of China*, (September 22, 2004). Thus, we find that Red Garden, despite its information to the contrary, by not contacting current ownership of Meizhou, or the ownership that was in place when Red Garden was responding to the Department's questionnaires, did not act to the best of its ability to obtain the FOP information from Meizhou. The Department determines that partial adverse facts is warranted for the portion of Red Garden's sales produced by Meizhou. Therefore, we are applying the PRC-wide rate to all of these sales by Red Garden during the POI.

Yelin's Partial Facts Available

For the final determination, the Department is applying partial facts available for Yelin's purchases of STPP used in the processing stage of subject merchandise production in accordance with sections 776(a)(1) and 776(a)(2)(D) of the Act.

When calculating its STPP usage, Yelin incorrectly allocated STPP usage over the shrimp input factor. *See Memorandum from John D.A. LaRose to Alex Villanueva, Acting Program Manager, regarding Verification of Sales and Factors of Production for Yelin Enterprise Co. Hong Kong, Antidumping Duty Investigation of Certain Canned and Frozen Warmwater Shrimp from the People's Republic of China* (''*Yelin Verification Report*''), dated October 12, 2004 at 22. It is inaccurate for Yelin to allocate this consumption over the shrimp input because it misrepresents the actual usage of STPP. In order for the Department to calculate the most accurate dumping margin for Yelin, normal value should be calculated using all of Yelin's FOPs during the POI. Because the STPP usage was not reported correctly, the reported usage by Yelin was not verifiable. At verification, the Department further explored the issue by requesting Yelin's purchase records for STPP. Yelin's audited financial records did not reflect STPP purchases. *Id.* Therefore, the Department determines that Yelin was unable to support its reported STPP usage rates.

In accordance with section 776(a)(2)(D) of the Act, the Department may determine that facts available apply due to the Department's inability to verify information provided by an interested party. Because Yelin was unable to support its purchases and usage of STPP, the Department is applying partial facts available for Yelin's factor usage for STPP. As facts available, the Department has calculated the factor usage ratio for STPP by taking the highest monthly volume figure of

STPP, multiplying that figure by six (for the six months in the POI) and dividing that by production of total finished product during the POI.

In addition, the Department is applying partial facts available regarding Yelin's sales of its by-product offset to normal value in the final determination. The Department at verification determined that Yelin's audited financial records did not reflect any by-product sales. *See Yelin Verification Report* at 22. In order for the Department to properly offset Yelin's normal value for its by-products sales, the Department would need evidence that Yelin actually sold the by-products during the POI. At verification, Yelin provided unofficial information regarding its by-product sales which could not be reconciled to its audited financial statements. In accordance with section 776(a)(2)(D) of the Act, because the Department was unable to verify information provided by Yelin, the Department is not making an adjustment to normal value for by-product sales.

Zhanjiang Guolian's Partial Facts Available

For the final determination, the Department is applying partial facts available regarding Zhanjiang Guolian's unreported consumption of diesel fuel. *See Memorandum from Irene Gorelik to Alex Villanueva, Acting Program Manager, regarding Verification of Sales and Factors of Production for Zhanjiang Guolian Aquatic Products Co., Ltd. Antidumping Duty Investigation of Certain Canned and Frozen Warmwater Shrimp from the People's Republic of China*, dated September 24, 2004. The Department learned during verification that this particular factor is used at an integral stage of Zhanjiang Guolian's farming and processing operations. Therefore, the Department finds that diesel fuel is a significant expense related to transport of the primary input and must be included in the FOP database. In accordance with section 776(a)(1) of the Act, the Department may use the facts available if necessary information is not available on the record.

In its case brief submitted on October 19, 2004, Zhanjiang Guolian stated that diesel fuel was booked in the company's financial records as overhead. However, the Department found that the diesel fuel used by Zhanjiang Guolian is a significant material input for the production of subject merchandise. Zhanjiang Guolian did not report diesel fuel as a factor of production in the questionnaire dated February 25, 2004. Thus, since diesel fuel as an FOP is not on the record, the Department must make a determination using the facts available with regard to Zhanjiang Guolian's consumption of diesel fuel during the POI.

As facts available, the Department is using information from Zhanjiang Guolian obtained at verification to calculate the value for diesel fuel consumption. *See Preliminary Factor Valuation Memo* at Exhibit 6 and *Memorandum to James C. Doyle, Office Director, from John D.A. LaRose, Case Analyst, through Alex Villanueva, Acting Program Manager, Regarding Selection of Surrogate Factor Values for Allied Pacific, Yelin, Zhanjiang Guolian, and Red Garden* (''*Final Factor Valuation Memorandum*'').

Changes Since the Preliminary Determination

Based on our findings at verification, additional information placed on the record of this investigation, and analysis of comments received, we have made adjustments to the calculation methodology for the final dumping margins in this proceeding. For discussion of the company-specific changes made since the preliminary determination to the final margin programs, *see Final Analysis Memo for Allied, Final Analysis Memo for Red Garden, Final Analysis Memo for Yelin, and Final Analysis Memo for Zhangjian Guolian*.

Margins for Cooperative Exporters Not Selected

For those exporters who responded to Section A of the Department's antidumping questionnaire, established their claim for a separate rate, and had sales of the merchandise under investigation, but were not selected as Mandatory Respondents in this investigation, the Department has calculated a weighted-average margin based on the rates calculated for those exporters that were selected to respond in this investigation, excluding any rates that are zero, *de minimis* or based entirely on adverse facts available. Companies receiving this rate are identified by name in the ''Suspension of Liquidation'' section of this notice. *See Notice of Preliminary Determination of Sales at Less Than Fair Value: Honey from the People's Republic of China*, 64 FR 24101 (May 11, 2001). For further discussion, see the *Preliminary Determination*.

Surrogate Values

The Department made changes to the surrogate values used to calculate the normal value from the *Preliminary Determination*. For a complete discussion of the surrogate values, see *Issues and Decisions Memorandum* at Comments 1, 2, 7 (B), and 9 (D) and (F).

Final Determination Margins

We determine that the following percentage weighted-average margins exist for the POI:

Company	Weighted-average margin (percent)
Allied Pacific Group (''Allied'')	84.93
Yelin Enterprise Co Hong Kong (''Yelin'')	82.27
Shantou Red Garden Foodstuff Co., Ltd. (''Red Garden'')	27.89
Zhanjiang Guolian Aquatic Products Co., Ltd. (''Zhanjiang Guolian'')	.07 (*de minimis*)
PRC Wide Rate	112.81

CERTAIN FROZEN AND CANNED WARMWATER SHRIMP FROM PRC SECTION A RESPONDENTS

Manufacturer/exporter	Weighted-average margin (percent)
Asian Seafoods (Zhanjiang) Co., Ltd.	55.23
Beihai Zhengwu Industry Co., Ltd.	55.23
Chaoyang Qiaofeng Group Co., Ltd. (Shantou Qiaofeng (Group) Co., Ltd.) (Shantou/Chaoyang Qiaofeng)	55.23

CERTAIN FROZEN AND CANNED WARMWATER SHRIMP FROM PRC SECTION A RESPONDENTS—Continued

Manufacturer/exporter	Weighted-average margin (percent)
Chenghai Nichi Lan Food Co., Ltd.	55.23
Dalian Ftz Sea-Rich International Trading Co., Ltd.	55.23
Dongri Aquatic Products Freezing Plants	55.23
Fuqing Dongwei Aquatic Products Industry Co., Ltd.	55.23
Gallant Ocean (Liangjiang) Co., Ltd.	55.23
Hainan Fruit Vegetable Food Allocation Co., Ltd.	55.23
Hainan Golden Spring Foods Co., Ltd./Hainan Brich Aquatic Products Co., Ltd.	55.23
Kaifeng Ocean Sky Industry Co., Ltd.	55.23
Leizhou Zhulian Frozen Food Co., Ltd.	55.23
Pingyang Xinye Aquatic Products Co., Ltd.	55.23
Savvy Seafood Inc.	55.23
Shanghai Taoen International Trading Co., Ltd	55.23
Shantou Long Feng Foodstuffs Co., Ltd. (Shantou Longfeng Foodstuffs Co., Ltd.)	55.23
Shantou Wanya Food Factory Co., Ltd.	55.23
Shantou Jinyuan District Mingfeng Quick-Frozen Factory	55.23
Shantou Ocean Freezing Industry and Trade General Corporation	55.23
Shantou Shengping Oceanstar Business Co., Ltd.	55.23
Shantou Yuexing Enterprise Company	55.23
Shantou Ruiyuan Industry Co., Ltd.	55.23
Shantou Freezing Aquatic Product Food Stuffs Co.	55.23
Shantou Jinhang Aquatic Industry Co., Ltd.	55.23
Xuwen Hailang Breeding Co., Ltd.	55.23
Yantai Wei-Cheng Food Co., Ltd.	55.23
Zhangjiang Newpro Food Co., Ltd.	55.23
Zhangjiang Bobogo Ocean Co., Ltd.	55.23
Zhanjiang Runhai Foods Co., Ltd.	55.23
Zhanjiang Go-Harvest Aquatic Products Co., Ltd.	55.23
Zhanjiang Universal Seafood Corp.	55.23
Zhanjiang Evergreen Aquatic Product Science and Technology Co., Ltd.	55.23
Zhoushan Huading Seafood Co., Ltd.	55.23
Zhoushan Cereals Oils and Foodstuffs Import and Export Co., Ltd.	55.23
Zhoushan Lizhou Fishery Co., Ltd.	55.23

Continuation of Suspension of Liquidation

In accordance with section 735(c)(1)(B) of the Act, we are directing U.S. Customs and Border Protection (''CBP'') to continue to suspend liquidation of all entries of subject merchandise from Red Garden, that are entered, or withdrawn from warehouse, for consumption on or after the July 16, 2004, the date of publication of the *Preliminary Determination*. However, with respect to Allied, Yelin, all the Section A Respondents granted a separate rate, and all other PRC exporters, the Department will continue to direct CBP to suspend liquidation of all entries of certain frozen and canned warmwater shrimp from the PRC that are entered, or withdrawn from warehouse, on or after 90 days before the July 16, 2004, the date of publication of the *Preliminary Determination*. With respect to Zhanjiang Guolian, the Department will not direct the CBP suspend liquidation of any entries of certain frozen and canned warmwater shrimp from the PRC as described in the ''Scope of Investigation'' section, that are entered, or withdrawn from warehouse, for consumption on or after the date of publication of this notice in the **Federal Register**. The Department does not require any cash deposit or posting of a bond for Zhanjiang Guolian when the subject merchandise is produced and exported by Zhanjiang Guolian. These suspension of liquidation instructions will remain in effect until further notice.

Disclosure

We will disclose the calculations performed within five days of the date of publication of this notice to parties in this proceeding in accordance with 19 CFR 351.224(b).

ITC Notification

In accordance with section 735(d) of the Act, we have notified the ITC of our final determination of sales at LTFV. As our final determination is affirmative, in accordance with section 735(b)(2) of the Act, within 45 days the ITC will determine whether the domestic industry in the United States is materially injured, or threatened with material injury, by reason of imports or sales (or the likelihood of sales) for importation of the subject merchandise. If the ITC determines that material injury or threat of material injury does not exist, the proceeding will be terminated and all securities posted will be refunded or canceled. If the ITC determines that such injury does exist, the Department will issue an antidumping duty order directing CBP to assess antidumping duties on all imports of the subject merchandise entered, or withdrawn from warehouse, for consumption on or after the effective date of the suspension of liquidation.

Notification Regarding APO

This notice also serves as a reminder to parties subject to administrative protective order (''APO'') of their responsibility concerning the disposition of proprietary information disclosed under APO in accordance with 19 CFR 351.305. Timely notification of return or destruction of APO materials or conversion to judicial protective order is hereby requested. Failure to comply with the regulations and the terms of an APO is a sanctionable violation.

This determination is issued and published in accordance with sections 735(d) and 777(i)(1) of the Act.

Dated: November 29, 2004.

James J. Jochum,

Assistant Secretary for Import Administration.

Appendix

I. General Issues:
- Comment 1: Raw Shrimp Surrogate Value
- Comment 2: Surrogate Value for Labor
- Comment 3: Combination Rates
- Comment 4: Weight Averaging the Dumping Margins
- Comment 5: Department's Offset Methodology

II. Company-Specific Issues
- Comment 6: Red Garden
  - A. Weighting Factor Between Mingfeng [8] and Long Feng [9]
  - B. Partial Adverse Facts Available for Sales Made using Meizhou [10]
  - C. Red Garden's Deposit Rate
- Comment 7: Yelin & Allied Pacific
  - A. Critical Circumstances
  - B. Surrogate Financial Ratios
- Comment 8: Yelin
  - A. Facts Available for Water, Electricity, Diesel Fuel and Heavy Oil
  - B. Facts Available for Labor
  - C. Partial Facts Available for STPP [11]
  - D. Denial of By-Products Offset
  - E. Rejected Submissions
- Comment 9: Zhanjiang Guolian
  - A. Minor Corrections
  - B. Ice and Diesel Fuel
  - C. Land Lease
  - D. Surrogate Value for Shrimp Feed
  - E. Valuation of Integrated Factors of Production
  - F. Surrogate Financial Ratios

[FR Doc. 04–26976 Filed 12–7–04; 8:45 am]

BILLING CODE 3510–DR–P

[8] Shantou Jinyuan District Mingfeng Quick-Frozen Factory.

[9] Shantou Long Feng Foodstuffs Co., Ltd.

[10] Meizhou Aquatic Shantou Ocean Freezing.

[11] Sodium Tripolyphosphate.

DEPARTMENT OF COMMERCE

International Trade Administration

[A–552–802]

Final Determination of Sales at Less Than Fair Value: Certain Frozen and Canned Warmwater Shrimp From the Socialist Republic of Vietnam

AGENCY: Import Administration, International Trade Administration, Department of Commerce.

SUMMARY: On July 16, 2004, the Department of Commerce published its preliminary determination of sales at less than fair value (''LTFV''), negative preliminary determination of critical circumstances, and postponement of the final determination in the antidumping investigation of certain frozen and canned warmwater shrimp from the Socialist Republic of Vietnam (''Vietnam''). On September 1, 2004, the Department of Commerce published an amended preliminary determination of sales at LTFV. The period of investigation (''POI'') is April 1, 2003, through September 30, 2003.

The investigation covers four shrimp processors which are Mandatory Respondents [1] and 34 Section A Respondents.[2] We invited interested parties to comment on our preliminary determination and amended preliminary determination of sales at LTFV. Based on our analysis of the comments we received, we have made changes to our calculations for the four Mandatory Respondents.

DATES: Effective Date: December 8, 2004.

FOR FURTHER INFORMATION CONTACT: Alex Villanueva, AD/CVD Operations, Office 9, Import Administration, International Trade Administration, U.S. Department of Commerce, 14th Street and Constitution Avenue NW., Washington, DC 20230; telephone: (202) 482–3208.

Final Determination

We determine that certain frozen and canned warmwater shrimp from Vietnam is being, or is likely to be, sold in the United States at LTFV as provided in section 735 of Tariff Act of 1930, as Amended (''the Act''). The estimated margins of sales at LTFV are shown in the ''Final Determination Margins'' section of this notice.

Case History

The Department of Commerce (the ''Department'') published its preliminary determination of sales at LTFV on July 16, 2004. *See Notice of Preliminary Determination of Sales at Less Than Fair Value, Negative Preliminary Determination of Critical Circumstances and Postponement of Final Determination: Certain Frozen and Canned Warmwater Shrimp from the Socialist Republic of Vietnam*, 69 FR 42672 (July 16, 2004) (''Preliminary Determination''). On September 1, 2004, the Department published an amended preliminary determination. *See Notice of Amended Preliminary Antidumping Duty Determination of Sales at Less Than Fair Value: Certain Frozen and Canned Warmwater Shrimp from the Socialist Republic of Vietnam*, 69 FR 53411 (September 1, 2004) (''*Amended Preliminary Determination*'').

The Department conducted verification of the Mandatory Respondents and certain Section A Respondents' data in Vietnam. *See* the ''Verification'' section below for additional information.

We invited parties to comment on the *Preliminary Determination* and *Amended Preliminary Determination*. We received comments from the Ad Hoc Shrimp Trade Action Committee, Versaggi Shrimp Corporation and Indian Ridge Shrimp Company, hereinafter referred to collectively as ''Petitioners,'' the Respondents and other interested parties to this investigation.

On October 20, 2004, parties submitted case briefs. On October 29, 2004, parties submitted rebuttal briefs.

Since the *Preliminary Determination*, the following events have occurred:

Company Specific Comments

On July 16, 2004, the Department received the sales reconciliation from Camimex, Kim Anh, Seaprodex Minh Hai and Minh Phu.

On July 21, 2004, the Department received comments from the Respondents on the Department's Customs instructions.

On July 26, 2004, the Department sent supplemental questionnaires to Seaprodex Minh Hai and Camimex. On July 27, 2004 the Department sent supplemental questionnaires to Kim Anh and Minh Phu. On July 30, 2004 the Department received a request for an extension to respond to the supplemental questionnaires from Camimex, Kim Anh and Seaprodex Minh Hai and served the verification schedule on all interested parties. On

[1] Camau Frozen Seafood Processing Import Export Corporation (''Camimex''); Kim Anh Co., Ltd. (''Kim Anh''); Minh Phu Seafood Corporation (''Minh Phu''); Minh Hai Joint-Stock Seafoods Processing Company (''Seaprodex Minh Hai'').

[2] Can Tho Animal Fisheries Product Processing Export Enterprise (''Cafatex''); Cai Doi Vam Seafood Import Export Company (''Cadovimex''); Sao Ta Foods Joint Stock Company (''Fimex VN''); Viet Hai Seafood Company (''Vietnam Fish-One''); Kiengiang Seafood Import Export Company (''Kisimex''); Soc Trang Aquatic Products and General Import Export Company (''Stapimex''); Coastal Fisheries Development Corporation (''Cofidec''); Phuong Nam Co., Ltd. (''Phuong Nam''); Cuu Long Seaproducts Company (''Cuulong Seapro''); Minh Hai Export Frozen Seafood Processing Joint-Stock Company (''Jostoco''); Can Tho Agriculture and Animal Products Import Export Company (''Cataco''); Nha Trang Fisheries Co. (''Nha Trang''); Nhatrang Seaproduct Company (''Nhatrang Seafoods''); Minh Hai Seaproducts Import and Export Corporation (''Seaprimex''); Thuan Phuoc Seafoods and Trading Corporation; Nha Trang Fisheries Joint Stock Company (''Nhatrang Fisco''); Danang Seaproducts Import Export Company (''Seaprodex Danang''); C.P. Vietnam Livestock; UTXI Aquatic Products Processing Company (''UTXI''); Viet Nhan Company; Investment Commerce Fisheries Corporation (''Incomfish''); Vinhloi Import Export Company (''VIMEXCO''); Bac Lieu Fisheries; Viet Foods Co., Ltd. (''Viet Foods''); Truc An Company (''Truc An''); Cam Ranh Seafoods Processing Enterprise Company (''Camranh Seafoods''); Hai Thuan Company (''Hai Thuan''); Phu Cuong Seafood Processing (''Phu Cuong''); Ngoc Sinh Company (''Ngoc Sinh''); Aquatic Product Trading Company (''APT''); Song Huong ASC Import-Export Company Ltd. (''ASC''); Hanoi Seaproducts Import Export Corp. (''Seaprodex Hanoi''); Pataya Food Industries (Vietnam) Ltd. (''Pataya VN''); and Amanda Foods (Vietnam) Ltd. (''Amanda'').

August 2, 2004 the Department also granted an extension to Camimex, Kim Anh and Seaprodex Minh Hai for responding to the Department's July 26, 2004 supplemental questionnaires. On August 3, 2004 the Department received Minh Phu's supplemental questionnaire response.

On August 3, 2004, the Department received the Petitioners' rebuttal to the Respondents' July 21, 2004 comments regarding errors in the Department's Customs instructions.

On August 5, 2004, the Department granted an extension to Cafatex for submitting reconciliation information. On August 11, 2004, the Department received Cafatex's sales reconciliation information.

On August 10, 2004 the Department sent Seaprodex Minh Hai supplemental questionnaire.

On August 12, 2004, the Department received Seaprodex Minh Hai's supplemental questionnaire response, Kim Anh's 4th supplemental questionnaire response, and Camimex's supplemental questionnaire response.

On August 18, 2004, the Department sent a verification outline to Camimex and Seaprodex Minh Hai. On August 18, 2004 Camimex submitted pre-verification corrections and the Department sent verification agendas to Kim Anh, Minh Phu and Cafatex. The Department received Kim Anh's pre-verification corrections. On August 23, 2004 the Department received a request for an extension for serving verification exhibits Kim Anh, Cafatex and Seaprodex Minh Hai. On August 23, 2004 the Department amended the verification outline for Kim Anh.

On August 24, 2004, an analyst submitted an analysis of ministerial errors for both the Section A respondents and the mandatory respondents.

On August 31, 2004, the Department received Cafatex's pre-verification corrections. On September 7, 2004 the Department received Seaprodex Minh Hai's pre-verification corrections.

On September 8, 2004, the Department received additional surrogate value data from the Respondents.

On September 14, 2004, the Department received both Camimex and Minh Phu's pre-verification corrections.

On September 17, 2004 the Department set a deadline for rebuttal brief comments of September 20, 2004. On September 20, 2004 the Department received a request for an extension of the briefing schedule from the Petitioners as well as their submission of factual information.

On September 22, 2004 the Department received a letter from VSC opposing the Petitioner's request for an expanded briefing schedule. On September 23, 2004 the Department received Red Chamber's comments regarding alleged clerical errors in the *Preliminary Determination* regarding two Section A Respondents.

On September 27, 2004, an analyst wrote a memo to the file regarding the termination of Kim Anh's verification.

On October 4, 2004, the Department received a letter from Red Chamber removing their submission from the record.

On October 6, 2004, verification reports for Seaprodex Minh Hai and Cafatex were completed. On October 12, 2004 the verification report for Minh Phu was completed.

On October 13, 2004, the deadline for case briefs and rebuttal briefs was set as October 20, 2004 for case briefs and October 25, 2004 for rebuttal briefs. On October 15, 2004 the Department received a request for an extension for submitting rebuttal briefs from the Petitioners.

On October 20, 2004, the Department received case briefs from VSC, Xian-Ning, Eastern Fish/LJS, Red Chamber, and the Petitioners.

On October 25, 2004, the Department received a rebuttal brief from Eastern Fish Company. On October 26, 2004 the Department received a rebuttal brief from Xian-Ning. On October 29, 2004 the Department received rebuttal briefs from the Petitioners and VSC.

On November 8, 2004, the Department sent a letter to Seaprodex Minh Hai, Minh Phu and Camimex requesting that they resubmit their sales and FOP databases. On November 8, 2004 the Department sent a clarification letter to Camimex concerning the Department's November 8, 2004 letter requesting the resubmission of their sales and FOP databases.

Hearing

On August 3, 2004, the Department received a request for a hearing from the Respondents on the issues addressed in their case briefs.

On August 13, 2004, the Department received a request for a scope hearing from the American Breaded Shrimp Processors Association (''ABSPA''). On August 16, 2004 the Department received a notice of intent to participate in hearings from the Petitioners.

On October 20, 2004, the Department received a notice of intent to participate in the hearing from Eastern Fish Company. The Department sent a letter to all interested parties concerning a request for a hearing.

On November 2, 2004, the Department received a letter from ABSPA concerning the hearing on scope issues. Also on November 2, 2004 the Department sent a letter to all interested parties concerning the public hearing. On November 4, 2004 the Department sent a letter to all interested parties regarding presenters at the public hearing. On November 4, 2004 the Department also sent a letter to ABSPA notifying them that because they did not submit any case or rebuttal briefs on the scope issues and that they could not make any presentations in the scope hearing.

On November 5, 2004, the Department held a public hearing on issues concerning financial ratios, surrogate values, and the Mandatory Respondents.

On November 8, 2004, the Department postponed the public scope hearing. On November 23, 2004, the Department held its scope hearing.

Separate Rates

On August 18, 2004, the Department received additional information regarding separate rate status from: Phuong Nam, Bac Lieu Fisheries, Cam Ranh Seafoods, VIMEXCO, Ngoc Sinh, Nha Trang, UTXI, Truc An, Kisimex, Vietnam Fish-One, Hai Thuan, and Incomfish. On August 20, 2004 the Department received additional information regarding ASC, Viet Foods, APT, Cofidec, and Phu Cuong's requests for separate rate status.

Scope Comments by Interested Parties

On July 16, 2004, the Department received a scope exclusion request on behalf of Xian-Ning Seafood Co. Ltd., asking the Department to determine whether shrimp scampi is outside the scope of the antidumping investigation. On August 2, 2004 the Department received scope comments regarding dusted shrimp from Eastern Fish Company. On August 2, 2004 the Department received scope comments regarding dusted shrimp and battered shrimp from the Petitioners. On August 12, 2004 the Department received Eastern Fish Company's reply to the Petitioner's August 2, 2004 scope comments. On November 8, 2004 the Department placed Lee Kum Kee's request to determine whether shrimp sauce is outside the scope of this investigation on the record of this investigation.

Analysis of Comments Received

The issue of separate rates raised in the case and rebuttal briefs by parties in this investigation are addressed in the *Memorandum from Nicole Bankhead, Case Analyst through Alex Villanueva,*

Program Manager, to James Doyle, Office Director, Antidumping Duty Investigation of Certain Frozen and Canned Warmwater Shrimp from the Socialist Republic of Vietnam: Final Determination Separate Rates Memorandum for Section A Respondents (''Section A Memo''), dated November 29, 2004. The various scope issues are discussed in the ''Scope Comments'' section of this notice. All other issues raised in the case and rebuttal briefs by parties in this investigation are addressed in the Issues and Decision Memorandum, dated November 29, 2004, which is hereby adopted by this notice (''*Decision Memorandum*''). A list of the issues which parties raised and to which we respond in the *Decision Memorandum* is attached to this notice as an Appendix. The *Decision Memorandum* is a public document and is on file in the Central Records Unit (''CRU''), Main Commerce Building, Room B–099, and is accessible on the Web at *http://ia.ita.doc.gov.* The paper copy and electronic version of the memorandum are identical in content.

Non-Market Economy Country Status

On November 8, 2002, the Department determined under section 771(18)(A) of the Act, after analyzing comments from interested parties, that based on the preponderance of evidence on the record related to economic reforms in Vietnam to date, analyzed as required under section 771(18)(B) of the Act, that Vietnam should be treated as a non-market economy country under the U.S. antidumping law, effective July 1, 2001. *See Notice of Preliminary Determination of Sales at Less Than Fair Value, Affirmative Preliminary Determination of Critical Circumstances and Postponement of Final Determination: Certain Frozen Fish Fillets From the Socialist Republic of Vietnam,* 68 FR 4986, 4990 (January 31, 2003).

A designation as a non-market economy remains in effect until it is revoked by the Department (*see* section 771(18)(C) of the Act).

Scope Comments

In the *Preliminary Determination,* the Department solicited comments from interested parties which would enumerate and describe a clear, administrable definition of dusted shrimp for the final determination. As noted above, we received comments on dusted and battered shrimp for the final determination. On November 29, 2004, the Department made a scope determination with respect to dusted shrimp and battered shrimp. *See Memorandum from Edward C. Yang, Vietnam/NME Unit Coordinator, Import Administration to Barbara E. Tillman, Acting Deputy Assistant Secretary for Import Administration, Antidumping Investigation on Certain Frozen and Canned Warmwater Shrimp from Brazil, Ecuador, India, Thailand, the Socialist Republic of Vietnam and the Socialist Republic of Vietnam: Scope Clarification on Dusted Shrimp and Battered Shrimp* (''*Dusted/Battered Scope Memo2*''), dated November 29, 2004. Based on the information presented by interested parties, the Department determines that (1) certain dusted shrimp, produced from fresh (or thawed-from-frozen) and peeled shrimp; to which a ''dusting'' layer of rice or wheat flour of at least 95 percent purity has been applied; so that the entire surface of the shrimp flesh is thoroughly and evenly coated with the flour; and the non-shrimp content of the end product constitutes between 4 to 10 percent of the product's total weight after being dusted, but prior to being frozen; and is subjected to individually quick frozen freezing immediately after application of the dusting layer; and (2) battered shrimp, when dusted in accordance with the definition of dusting, coated with a wet viscous layer containing egg and/or milk, and par-fried are excluded from the scope of this investigation. *See Dusted/Battered Scope Memo* at 28.

On November 29, 2004, the Department made scope determinations with respect to Lee Kum Kee's shrimp sauce. *See Memorandum from Edward C. Yang, Vietnam/NME Unit Coordinator, Import Administration to Barbara E. Tillman, Acting Deputy Assistant Secretary for Import Administration Antidumping Investigation on Certain Frozen and Canned Warmwater Shrimp from Brazil, Ecuador, India, Thailand, the Socialist Republic of Vietnam and the Socialist Republic of Vietnam: Scope Clarification on Lee Kum Kee's Shrimp Sauce* (''*Shrimp Sauce Scope Memo*''), dated November 29, 2004. Based on the information presented by interested parties, the Department determines that Lee Kum Kee's shrimp sauce is excluded from the scope of this investigation. *See Shrimp Sauce Scope Memo* at 8.

Additionally, on November 29, 2004, the Department made scope determinations with respect to shrimp scampi. *See Memorandum from Edward C. Yang, Vietnam/NME Unit Coordinator, Import Administration to Barbara E. Tillman, Acting Deputy Assistant Secretary for Import Administration Antidumping Investigation on Certain Frozen and Canned Warmwater Shrimp from Brazil, Ecuador, India, Thailand, the Socialist Republic of Vietnam and the Socialist Republic of Vietnam: Scope Clarification on Shrimp Scampi* (''*Shrimp Scampi Scope Memo*''), dated November 29, 2004. Based on the information presented by interested parties, the Department determines that shrimp scampi is included in the scope of this investigation. *See Shrimp Scampi Scope Memo* at 8.

Scope of Investigation

The scope of this investigation includes certain warmwater shrimp and prawns, whether frozen or canned, wild-caught (ocean harvested) or farm-raised (produced by aquaculture), head-on or head-off, shell-on or peeled, tail-on or tail-off,[3] deveined or not deveined, cooked or raw, or otherwise processed in frozen or canned form.

The frozen or canned warmwater shrimp and prawn products included in the scope of the investigations, regardless of definitions in the Harmonized Tariff Schedule of the United States (''HTSUS''), are products which are processed from warmwater shrimp and prawns through either freezing or canning and which are sold in any count size.

The products described above may be processed from any species of warmwater shrimp and prawns. Warmwater shrimp and prawns are generally classified in, but are not limited to, the *Penaeidae* family. Some examples of the farmed and wild-caught warmwater species include, but are not limited to, whiteleg shrimp (*Penaeus vannemei*), banana prawn (*Penaeus merguiensis*), fleshy prawn (*Penaeus chinensis*), giant river prawn (*Macrobrachium rosenbergii*), giant tiger prawn (*Penaeus monodon*), redspotted shrimp (*Penaeus brasiliensis*), southern brown shrimp (*Penaeus subtilis*), southern pink shrimp (*Penaeus notialis*), southern rough shrimp (*Trachypenaeus curvirostris*), southern white shrimp (*Penaeus schmitti*), blue shrimp (*Penaeus stylirostris*), western white shrimp (*Penaeus occidentalis*), and Indian white prawn (*Penaeus indicus*).

Frozen shrimp and prawns that are packed with marinade, spices or sauce are included in the scope of this investigation. In addition, food preparations, which are not ''prepared meals,'' that contain more than 20 percent by weight of shrimp or prawn are also included in the scope of this investigation.

[3] ''Tails'' in this context means the tail fan, which includes the telson and the uropods.

Excluded from the scope are (1) breaded shrimp and prawns (1605.20.10.20); (2) shrimp and prawns generally classified in the *Pandalidae* family and commonly referred to as coldwater shrimp, in any state of processing; (3) fresh shrimp and prawns whether shell-on or peeled (0306.23.00.20 and 0306.23.00.40); (4) shrimp and prawns in prepared meals (1605.20.05.10); and (5) dried shrimp and prawns.

The products covered by this investigation are currently classified under the following HTSUS subheading: 0306.13.00.03, 0306.13.00.06, 0306.13.00.09, 0306.13.00.12, 0306.13.00.15, 0306.13.00.18, 0306.13.00.21, 0306.13.00.24, 0306.13.00.27, 0306.13.00.40, 1605.20.10.10, 1605.20.10.30, and 1605.20.10.40. These HTSUS subheadings are provided for convenience and for customs purposes only and are not dispositive, but rather the written descriptions of the scope of this investigation is dispositive.

The Department has issued nine decisions regarding the scope of the merchandise covered by this investigation: (1) On May 21, 2004, the Department declined to expand the scope of this investigation to include fresh (never frozen) shrimp; (2) on July 2, 2004, pursuant to a request from Ocean Duke, the Department found that its ''Seafood Mix'' is excluded from the scope of this investigation; (3) on July 2, 2004, the Department found that salad shrimp, sold in counts of 250 pieces or higher, are included within the scope of the this investigation; (4) on July 2, 2004, the Department found *Macrobrachium Rosenbergii* and organic shrimp included within the scope of this investigation; (5) on July 2, 2004, the Department found that peeled shrimp are included within the scope of this investigation; (6) on November 29, 2004, the Department found that shrimp sauce is excluded from the scope of this investigation; (7) on November 29, 2004, the Department found Xian-Ning Seafood Co., Ltd.'s scampi shrimp included within the scope of these investigation; (8) on November 29, 2004, the Department found certain dusted shrimp [4] are outside the scope of this investigation; and (9) on November 29, 2004, the Department found certain battered shrimp [5] are outside the scope of this investigation.

Verification

As provided in section 782(i) of the Act, we verified the information submitted by the Mandatory Respondents and certain Section A Respondents for use in our final determination. *See* the Department's verification reports on the record of this investigation in the CRU with respect to Cafatex, Camimex, Kim Anh, Minh Phu and Seaprodex Minh. For all verified companies, we used standard verification procedures, including examination of relevant accounting and production records, as well as original source documents provided by the Respondents.

Additionally, during verification, Kim Anh informed the Department that it had decided not to participate further in its verification. *See Memorandum to the File from Nazak Nikaktahr, Verification of the Response of Kim Anh Co., Ltd. (''Kim Anh'') with Regard to the Sales of Certain Frozen and Canned Warmwater Shrimp,* dated September 24, 2004.

Adverse Facts Available

Section 776(a)(2) of the Act provides that the Department shall apply ''facts otherwise available'' if, *inter alia,* an interested party or any other person (A) withholds information that has been requested, (B) fails to provide information within the deadlines established, or in the form or manner requested by the Department, subject to subsections (c)(1) and (e) of section 782, (C) significantly impedes a proceeding, or (D) provides information that cannot be verified as provided by section 782(i) of the Act. Section 776(b) of the Act provides further that the Department may use an adverse inference when a party has failed to cooperate by not acting to the best of its ability to comply with a request for information.

The Vietnam-Wide Rate

Because we begin with the presumption that all companies within a non-market economy (''NME'') country are subject to government control and because only the companies listed under the ''Final Determination Margins'' section below have overcome that presumption, we are applying a single antidumping rate—the Vietnam-wide rate—to all other exporters of subject merchandise from Vietnam. Such companies did not demonstrate entitlement to a separate rate. *See, e.g., Final Determination of Sales at Less Than Fair Value: Synthetic Indigo from the People's Republic of China,* 65 FR 25706 (May 3, 2000). The Vietnam-wide rate applies to all entries of subject merchandise except for entries from the Respondents which are listed in the ''Final Determination Margins'' section below (except as noted). The information used to calculate this Vietnam-wide rate was corroborated independently with some small changes in accordance with section 776(c) of the Act. *See Memorandum to the File from Joe Welton, Case Analyst through James C. Doyle, Program Manager and Edward C. Yang, Director, NME Unit, Preliminary Determination in the Investigation of Certain Frozen and Canned Warmwater Shrimp from the Socialist Republic of Vietnam (''Vietnam''): Corroboration of the Vietnam-Wide Adverse Facts-Available Rate* (''*Corroboration Memo*''), dated July 2, 2004.

For the reasons set forth in the *Preliminary Determination* and reaffirmed in the *Decision Memorandum* at Comment 10, we continue to find that the use of adverse facts available for the Vietnam-wide rate is appropriate. As adverse facts available, the Vietnam-wide rate is not intended to be a reflection of the dumping margins applied as separate rates to the Respondent companies. Consistent with our *Preliminary Determination* and with previous cases in which the respondent is considered uncooperative, as adverse facts available, we have applied a rate of 25.76 percent, a rate calculated in the initiation stage of the investigation from information provided in the petition (as adjusted by the Department).

Kim Anh

Pursuant to section 776(a)(2)(D) of the Act, we are applying facts otherwise available to Kim Anh because it refused to allow the Department to verify the information it had submitted during the course of this investigation. Furthermore, based on the record evidence and pursuant to section 776(b) of the Act, the Department has determined that Kim Anh did not cooperate to the best of its ability to comply with the Department's requests

[4] Dusted shrimp is a shrimp-based product that (1) Is produced from fresh (or thawed-from-frozen) and peeled shrimp; (2) To which a ''dusting'' layer of rice or wheat flour of at least 95 percent purity has been applied; (3) So that the entire surface of the shrimp flesh is thoroughly and evenly coated with the flour; and (4) The non-shrimp content of the end product constitutes between 4 to 10 percent of the product's total weight after being dusted, but prior to being frozen; and (5) Is subjected to IQF freezing immediately after application of the dusting layer. *See Memorandum from Edward C. Yang, NME Unit Coordinator, Import Administration to Barbara E. Tillman, Acting Deputy Assistant Secretary for Import Administration Antidumping Investigation on Certain Frozen and Canned Warmwater Shrimp from Brazil, Ecuador, India, Thailand, the Socialist Republic of Vietnam and the Socialist Republic of Vietnam: Scope Clarification on Dusted Shrimp and Battered Shrimp* (''Dusted/Battered Scope Memo2''), dated November 29, 2004.

[5] Battered shrimp is a shrimp based product that, when dusted in accordance with the definition of dusting above, is coated with a wet viscous layer containing egg and/or milk, and par-fried.

for information. Therefore, in accordance with section 776(b) of the Act, we find that Kim Anh does not qualify for a separate rate and that the use of adverse facts available to determine the margin for Kim Anh is warranted for the final determination in this investigation. Accordingly, Kim Anh will be subject to the Vietnam-wide rate (*see* above). This rate was corroborated in the final determination. *See Corroboration Memo; see also* Comment 6 in the *Decision Memorandum* for a further discussion of this issue.

Surrogate Country

In the *Preliminary Determination,* we stated that we had selected Bangladesh as the appropriate surrogate country to use in this investigation for the following reasons: (1) Bangladesh is at a level of economic development comparable to Vietnam; (2) Bangladeshi manufacturers produce comparable merchandise and are significant producers of frozen and canned warmwater shrimp; (3) Bangladesh provides the best opportunity to use appropriate, publicly available data to value the factors of production. *See Preliminary Determination,* 69 FR at 42678. We received no comments from interested parties concerning our selection of Bangladesh as the surrogate country during the briefing stage of this investigation. For the final determination, we have determined to continue to use Bangladesh as the surrogate country and, accordingly, have calculated normal value using Bangladeshi prices to value the Respondents' factors of production, when available and appropriate. We have obtained and relied upon publicly available information wherever possible. For a detailed description of the surrogate values that have changed as a result of comments the Department has received, *see* the Final Surrogate Value Memorandum dated November 29, 2004.

Separate Rates

In the *Preliminary Determination* and the *Amended Preliminary Determination,* the Department found that several companies which provided responses to Section A of the antidumping questionnaire were eligible for a rate separate from the Vietnam-wide rate. For the final determination, we have determined that additional companies have qualified for separate-rate status. *See Section A Memo.* For a complete listing of all the companies that received a separate rate, *see* the ''Final Determination Margins'' section below.

The margin we calculated in the *Preliminary Determination* for these companies was 16.01 percent. Because the rates of the selected Mandatory Respondents have changed since the *Preliminary Determination* and the *Amended Preliminary Determination,* we have recalculated the rate for Section A Respondents that are eligible for a separate rate. The rate is 4.38 percent. *See* Memorandum to the File from Paul Walker, *Calculation of Section A Rate,* dated November 29, 2004.

Final Determination Margins

We determine that the following percentage weighted-average margins exist for the POI:

CERTAIN FROZEN AND CANNED WARMWATER SHRIMP FROM VIETNAM MANDATORY RESPONDENTS

Manufacturer/exporter	Weighted-average margin (percent)
Camau Frozen Seafood Processing Import Export Corporation [6]	4.99
Kim Anh Company Limited [7]	25.76
Minh Phu Seafood Corporation [8]	4.21
Minh Hai Joint Stock Seafoods Processing Company [9]	4.13
Vietnam-Wide Margin	25.76

CERTAIN FROZEN AND CANNED WARMWATER SHRIMP FROM VIETNAM SECTION A RESPONDENTS

Manufacturer/exporter	Weighted-average margin (percent)
Amanda Foods (Vietnam) Ltd.[10]	4.38
Aquatic Products Trading Company [11]	4.38
Bac Lieu Fisheries Company Limited [12]	4.38
Coastal Fisheries Development Corporation [13]	4.38
Cai Doi Vam Seafood Import-Export Company [14]	4.38
Cam Ranh Seafoods Processing Enterprise Company [15]	4.38
Can Tho Agriculture and Animal Products Import Export Company [16]	4.38
Cantho Animal Fisheries Product Processing Export Enterprise [17]	4.38
C.P. Vietnam Livestock Co. Ltd.	4.38
Cuu Long Seaproducts Company [18]	4.38
Danang Seaproducts Import Export Corporation [19]	4.38
Hanoi Seaproducts Import Export Corporation [20]	4.38
Investment Commerce Fisheries Corporation [21]	4.38

CERTAIN FROZEN AND CANNED WARMWATER SHRIMP FROM VIETNAM SECTION A RESPONDENTS—Continued

Manufacturer/exporter	Weighted-average margin (percent)
Kien Giang Sea-Product Import-Export Company [22]	4.38
Minh Hai Export Frozen Seafood Processing Joint-Stock Company [23]	4.38
Minh Hai Seaproducts Import Export Corporation [24]	4.38
Nha Trang Fisheries Joint Stock Company [25]	4.38
Nha Trang Seaproduct Company [26]	4.38
Pataya Food Industries (Vietnam) Ltd.[27]	4.38
Phu Cuong Seafood Processing and Import-Export Company Limited [28]	4.38
Sao Ta Foods Joint Stock Company [29]	4.38
Soc Trang Aquatic Products and General Import Export Company [30]	4.38
Song Huong ASC Import-Export Company Ltd.[31]	4.38
Thuan Phuoc Seafoods and Trading Corporation [32]	4.38
UTXI Aquatic Products Processing Company [33]	4.38
Viet Foods Co., Ltd.[34]	4.38
Viet Nhan Company	4.38
Viet Hai Seafood Company Ltd.[35]	4.38
Vinh Loi Import Export Company [36]	4.38

Continuation of Suspension of Liquidation

Pursuant to 735(c)(1)(B) of the Act, we will instruct U.S. Customs and Border

[6] Also known as Camimex and Seafood Factory No. 4.

[7] Not a separate rate.

[8] Also known as Minh Phu Seafood Export-Import Corporation, Minh Phu, Minh Phu Seafood Pte., Minh Qui Seafood Co. Ltd., Minh Qui, Minh Phat Seafood Co. Ltd. & Minh Phat.

[9] Also known as Seaprodex Minh Hai.

[10] Also known as Amanda VN & Amanda.

[11] Also known as APT and A.P.T. Co.

[12] Also known as Bac Lieu, BACLIEUFIS, Bac Lieu Fis, Bac Lieu Fisheries Co. Ltd., Bac Lieu Fisheries Limited Company & Bac Lieu Fisheries Company Ltd.

[13] Also known as COFIDEC.

[14] Also known as Cadovimex.

[15] Also known as Cam Ranh.

[16] Also known as Cataco, Duyen Hai Foodstuffs Processing Factory, Caseafood, Coseafex & Cantho Seafood Export.

[17] Also known as Cafatex, Cafatex Vietnam, Xi Nghiep Che Bien Thuy Suc San Xuat Khau Can Tho, CAS, CAS Branch, Cafatex Saigon, Cafatex Fishery Joint Stock Corporation, Cafatex Corporation & Taydo Seafood Enterprise.

[18] Also known as Cuu Long Seapro.

Continued

Protection (''Customs'') to continue to suspend liquidation of all entries of subject merchandise from Vietnam entered, or withdrawn from warehouse, for consumption on or after July 16, 2004, the date of publication of the *Preliminary Determination.* Customs shall continue to require a cash deposit or the posting of a bond equal to the estimated amount by which the normal value exceeds the U.S. price as shown above. These instructions suspending liquidation will remain in effect until further notice.

Disclosure

We will disclose the calculations performed within five days of the date of publication of this notice to parties in this proceeding in accordance with 19 CFR 351.224(b).

[19] Also known as Seaprodex Danang, Tho Quang Seafood Processing and Export Company & Tho Quang.

[20] Also known as Seaprodex Hanoi.

[21] Also known as INCOMFISH, Investment Commerce Fisheries Corp., INCOMFISH Corp. & INCOMFISH Corporation.

[22] Also known as KISIMEX, Kien Giang Seaproduct Import & Export Company, Kien Giang Seaproduct Import and Export Company, Kien Giang Seaproduct Import Export Co., Kien Giang Sea Product Import & Export Co., Kien Giang Sea Product Import and Export Company, Kien Giang Sea Product Import & Export Company, Kien Giang Sea Product Import & Export Co., & Kien Giang Sea Product Im. & Ex. Co.

[23] Also known as Minh Hai Jostoco.

[24] Also known as Seaprimexco.

[25] Also known as Nha Trang Fisco & Nhatrang Fisco.

[26] Also known as Nha Trang Seafoods.

[27] Also known as Pataya VN.

[28] Also known as Phu Cuong Seafoods Processing Import-Export Company Ltd., Phu Cuong Co., Phu Cuong, Phu Cuong Seafood Processing & Import-Export Co. Ltd., Phu Cuong Seafood Processing, Phu Cuong Co. Ltd. & Phu Cuong Seafood Processing Import & Export Company Limited.

[29] Also known as Fimex VN, Saota Seafood Factory and Sao Ta Seafood Factory.

[30] Also known as STAPIMEX.

[31] Also known as Song Huong ASC Joint Stock Company, SOSEAFOOD, ASC, Song Huong Import Export Seafood Joint Stock Company, Song Huong Import-Export Seafood Joint Stock Company, Song Huong Import Export Seafood Company, Song Huong Import-Export Company, Song Huong Seafood Import Export Co., Song Huong Seafood Im-Export Co., SongHuong & Songhuong Joint Stock Company.

[32] Also known as Frozen Seafoods Factory No. 32.

[33] Also known as UTXI, UTXI Co. Ltd., UT XI Aquatic Products Processing Company & UT–XI Aquatic Products Processing Company.

[34] Also known as Viet Foods, Nam Hai Exports Food Stuff Limited, Nam Hai Export Foodstuff Company Ltd., Vietfoods Co. Ltd., Viet Foods Company Limited & Vietfoods Company Limited.

[35] Also known as Vietnam FishOne, Vietnam Fish-One Company Co. Ltd., Vietnam Fish-One, Vietnam Fish-One Co. Ltd., Vietnam Fish One Co. Ltd., Vietnam Fish One Company Limited & Vietnam Fish-One Company Limited.

[36] Also known as VIMEXCO, Vinh Loi Import/Export Co., VIMEX, VinhLoi Import Export Company & Vinh Loi Import-Export Company.

ITC Notification

In accordance with section 735(d) of the Act, we have notified the ITC of our final determination of sales at LTFV. As our final determination is affirmative, in accordance with section 735(b)(2) of the Act, within 45 days the ITC will determine whether the domestic industry in the United States is materially injured, or threatened with material injury, by reason of imports or sales (or the likelihood of sales) for importation of the subject merchandise. If the ITC determines that material injury or threat of material injury does not exist, the proceeding will be terminated and all securities posted will be refunded or canceled. If the ITC determines that such injury does exist, the Department will issue an antidumping duty order directing Customs to assess antidumping duties on all imports of the subject merchandise entered, or withdrawn from warehouse, for consumption on or after the effective date of the suspension of liquidation (*i.e.,* July 16, 2004).

Notification Regarding APO

This notice also serves as a reminder to parties subject to administrative protective order (''APO'') of their responsibility concerning the disposition of proprietary information disclosed under APO in accordance with 19 CFR 351.305. Timely notification of return or destruction of APO materials or conversion to judicial protective order is hereby requested. Failure to comply with the regulations and the terms of an APO is a sanctionable violation.

This determination is issued and published in accordance with sections 735(d) and 777(i)(1) of the Act.

Dated: November 29, 2004.

James J. Jochum,

Assistant Secretary for Import Administration.

Appendix

Comment 1: Raw Shrimp Price
Comment 2: The Department's Zeroing Methodology
Comment 3: Surrogate Value for Water
  A. Water Rates in Bangladesh
  B. Water Value Conversion Error
Comment 4: Financial Ratios
  A. Surrogate Company Financial Ratios
  B. By-Product Offset for Mandatory Respondents
  C. Inclusion of Factor X and Factor Y in Surrogate Financial Ratios
Comment 5: Company Specific Issues, Camimex
  A. Headless Shell-on (''HLSO'')-to-Headless Shell-off (''HOSO'') Conversion
  B. International Freight
Comment 6: Total Adverse Facts Available (''AFA'') for Kim Anh Co. Ltd. (''Kim Anh'')
Comment 7: Company Specific Issues, Minh Phu
  A. HLSO-to-HOSO Conversion
  B. Cold Storage
  C. Partial AFA for Direct Labor
Comment 8: Company Specific Issues, SMH
  A. Market Economy Purchase
  B. Recalculation of a Surrogate Expense for SMH
  C. Calculation of Weighted-Average U.S. Prices and Normal Values on a CONNUM-Specific Basis for SMH
  D. HLSO-to-HOSO Conversion
Comment 9: Weight-Averaging Respondent Margins by Net U.S. Sales Value to Calculate Separate Rates
Comment 10: Calculation of Vietnam-Wide Margin
  A. The Department Should Eliminate the Country-Wide Rate In All Cases
  B. The Department Should Not Apply AFA to the Vietnam-Wide Rate
  C. The Department Chose an Incorrect AFA Rate
Comment 11: Separate Rate Calculation
Comment 12: The Department Should Amend Its Customs Instructions to Include Additional Company Names Discussed in Section A Responses

[FR Doc. 04–26977 Filed 12–7–04; 8:45 am]

BILLING CODE 3510–DS–P

DEPARTMENT OF COMMERCE

International Trade Administration

[A–570–825]

Sebacic Acid from the People's Republic of China: Extension of Time Limit for Final Results of Antidumping Duty Administrative Review

AGENCY: Import Administration, International Trade Administration, Department of Commerce.

SUMMARY: The Department of Commerce (the Department) is extending the time limit for the final results of the 2002–2003 antidumping duty administrative review of the antidumping duty order on sebacic acid from the People's Republic of China (PRC) by seven days from December 3, 2004, until no later than December 10, 2004. The period of review (POR) is July 1, 2002, through June 30, 2003. This extension is made pursuant to section 751(a)(3)(A) of the Tariff Act of 1930, as amended by the Uruguay Round Agreements Act (the Act).

EFFECTIVE DATE: December 8, 2004.

FOR FURTHER INFORMATION CONTACT: Jennifer Moats or Brian Ledgerwood, China/NME Group, AD/CVD Operations, Import Administration, International Trade Administration, U.S. Department of Commerce, 14th Street and Constitution Avenue, NW, Washington, DC 20230; telephone: (202)

482–5047 or (202) 482–3836, respectively.

SUPPLEMENTARY INFORMATION:

Background

On August 5, 2004, the Department published the preliminary results of administrative review of the antidumping duty order on sebacic acid from the PRC. See *Sebacic Acid from the People's Republic of China: Preliminary Results of Antidumping Duty Administrative Review and Notice of Partial Recision*, 69 FR 47409 (August 5, 2004) (*Preliminary Results*). The review covers Guangdong Chemical Import and Export Corporation and the period July 1, 2002, through June 30, 2003. *Extension of Time Limits for Final Results*

Section 751(a)(3)(A) of the Act requires the Department to issue the preliminary results of an administrative review within 245 days after the last day of the anniversary month of an antidumping duty order for which a review is requested and issue the final results within 120 days after the date on which the preliminary results are published. If it is not practicable to complete the review within the time period, section 751(a)(3)(A) of the Act allows the Department to extend these deadlines to a maximum of 365 days and 180 days, respectively.

In the instant review, the Department has determined that it is not practicable to complete the review within the statutory time limit due to the need for analysis of certain complex issues, such as the selection of appropriate methodology for the calculation of the co–product. Therefore, in accordance, with section 751(a)(3)(A) of the Act, the Department is extending the time limit for the final results to no later than December 10, 2004, which is 127 days from the date of publication of the *Preliminary Results*.

This notice is issued and published in accordance with section 751(a)(1) of the Act and 19 CFR 351.213(h)(2).

Dated: December 2, 2004.

Barbara E. Tillman,

Acting Deputy Assistant Secretary for Import Administration.

[FR Doc. E4–3559 Filed 12–7–04; 8:45 am]

BILLING CODE 3510–DS–S

DEPARTMENT OF COMMERCE

International Trade Administration

[A–351–824]

Silicomanganese From Brazil: Preliminary Results of Antidumping Duty Administrative Review

AGENCY: Import Administration, International Trade Administration, Department of Commerce.

SUMMARY: The Department of Commerce is conducting an administrative review of the antidumping duty order on silicomanganese from Brazil in response to a request from manufacturers/exporters, Rio Doce Manganes S.A. (RDM), Companhia Paulista de Ferroligas (CPFL), and Urucum Mineracao S.A. (Urucum) (collectively RDM/CPFL).[1] This review covers the period December 1, 2002, through November 30, 2003.

We have preliminarily determined that RDM/CPFL did not make sales to the United States at prices below normal value during the period of review. We invite interested parties to comment on these preliminary results. Parties who submit comments are requested to submit with each comment a statement of the issue and a brief summary.

EFFECTIVE DATE: December 8, 2004.

FOR FURTHER INFORMATION CONTACT: Dmitry Vladimirov at (202) 482–0665 or Minoo Hatten at (202) 482–1690, AD/CVD Operations, Office 5, Import Administration, International Trade Administration, U.S. Department of Commerce, 14th Street and Constitution Avenue, NW., Washington, DC 20230.

SUPPLEMENTARY INFORMATION:

Background

On December 22, 1994, the Department of Commerce (the Department) published in the **Federal Register** the antidumping duty order on silicomanganese from Brazil. *See Notice of Antidumping Duty Order: Silicomanganese from Brazil,* 59 FR 66003, (December 22, 1994). On December 2, 2003, we published in the **Federal Register** a notice of opportunity to request an administrative review of the antidumping duty order on silicomanganese from Brazil covering the period December 1, 2002, through November 30, 2003. *See Antidumping or Countervailing Duty Order, Finding, or Suspended Investigation; Opportunity to Request Administrative Review,* 68 FR 67401, (December 3, 2003). On December 31, 2003, RDM/CPFL requested that the Department conduct an administrative review of its sales. On January 22, 2004, the Department published in the **Federal Register** a notice of initiation of this antidumping duty administrative review. *See Initiation of Antidumping and Countervailing Duty Administrative Reviews and Request for Revocation in Part,* 69 FR 3117 (January 22, 2004).

On August 17, 2004, the Department extended the due date for the preliminary results of this review until no later than November 30, 2004. *See Silicomanganese From Brazil: Extension of Time Limit for the Preliminary Results of the Antidumping Duty Administrative Review,* 69 FR 51062 (August 17, 2004).

The Department is conducting this review in accordance with section 751 of the Tariff Act of 1930, as amended (the Act).

Scope of Review

The merchandise covered by this order is silicomanganese. Silicomanganese, which is sometimes called ferrosilicon manganese, is a ferroalloy composed principally of manganese, silicon and iron, and normally contains much smaller proportions of minor elements, such as carbon, phosphorous, and sulfur. Silicomanganese generally contains by weight not less than 4 percent iron, more than 30 percent manganese, more than 8 percent silicon, and not more than 3 percent phosphorous. All compositions, forms, and sizes of silicomanganese are included within the scope of this review, including silicomanganese slag, fines, and briquettes. Silicomanganese is used primarily in steel production as a source of both silicon and manganese.

Silicomanganese is currently classifiable under subheading 7202.30.0000 of the *Harmonized Tariff Schedule of the United States* (HTSUS). Some silicomanganese may also currently be classifiable under HTSUS subheading 7202.99.5040. This scope covers all silicomanganese, regardless of its tariff classification. Although the HTSUS subheadings are provided for convenience and customs purposes, the written description of the scope remains dispositive.

Verification

From October 4, 2004, through October 15, 2004, in accordance with section 782(i) of the Act, the Department verified the sales and cost information provided by RDM/CPFL using standard verification procedures, the examination of relevant sales and financial records,

[1] We collapsed RDM, CPFL, and Urucum for purposes of this segment of the proceeding and have calculated a single dumping margin for them. *See* the ''Collapsing'' section.

and selection of original documentation containing relevant information. Our verification results are outlined in the public and proprietary versions of the verification reports. See memoranda entitled ''Home-Market and U.S. Sales Verification of Information Submitted by Rio Doce Manganes S.A. (RDM), Companhia Paulista de Ferro-Ligas (CPFL) and Urucum Mineração S.A. (Urucum) (collectively, RDM/CPFL),'' dated November 18, 2004 (*Sales Verification Report*), and ''Verification Report on the Cost of Production and Constructed Value Data Submitted by Rio Doce Manganes S.A. (RDM), Companhia Paulista de Ferro-Ligas (CPFL) and Urucum Mineração S.A. (Urucum) (collectively, RDM/CPFL),'' dated November 30, 2004 (*Cost Verification Report*), on file in the Central Records Unit (CRU), Room B–099 of the main Department of Commerce building.

Collapsing

The Department's regulations at section 351.401(f) outline the criteria for collapsing (*i.e.*, treating as a single entity) affiliated producers for purposes of calculating a dumping margin. The regulations state that we will treat two or more affiliated producers as a single entity where (1) those producers have production facilities for similar or identical products that would not require substantial retooling of either facility in order to restructure manufacturing priorities, and (2) we conclude that there is a significant potential for the manipulation of price or production. In identifying a significant potential for the manipulation of price or production, the Department may consider the following factors: (i) The level of common ownership; (ii) the extent to which managerial employees or board members of one firm sit on the board of directors of an affiliated firm; and, (iii) whether operations are intertwined, such as through the sharing of sales information, involvement in production and pricing decisions, the sharing of facilities or employees, or significant transactions between the affiliated producers. *See* 19 CFR 351.401(f)(2).

For the reason that RDM and Urucum are wholly owned subsidiaries of Companhia Vale de Rio Doce (CVRD), and CPFL is a wholly owned subsidiary of RDM, pursuant to section 771(33)(E) of the Act, CVRD is affiliated with RDM and Urucum, and RDM is affiliated with CPFL. Furthermore, based on CVRD's investment interest in both companies, we find that CVRD is in the position legally and/or operationally to exercise restraint or direction over RDM, CPFL, and Urucum, and thus, has direct or indirect control within the meaning of section 771(33)(F) of the Act. As such, we further determine that RDM, CPFL, and Urucum are affiliated pursuant to section 771(33)(F) of the Act.

With respect to the first criterion of section 351.401(f) of the Department's regulations, the information currently on the record indicates that RDM, CPFL, and Urucum use similar production facilities, in terms of production capacities and type machinery, and employ virtually identical production processes to produce identical or similar silicomanganese products. Because the companies could shift the production requirements from one facility to the other without incurring prohibitive costs, we find that RDM's, CPFL's, or Urucum's facilities would not require substantial retooling in order to restructure manufacturing priorities.

We also find that there exists a significant potential for manipulation of prices, production costs, and production priorities pursuant to section 351.401(f)(2) of the Department's regulations. Specifically, the information on the record indicates that CVRD has a direct and indirect involvement in RDM's, CPFL's, and Urucum's activities associated with the transportation of raw materials, production, and sales; all three companies share the expertise of an executive officer; and all three companies have heavily intertwined operations. Therefore, for the purposes of this administrative review, we find that RDM, CPFL, and Urucum are affiliated and have collapsed them into one entity pursuant to section 771(33) of the Act and section 351.401(f) of the Department's regulations. For a more complete discussion of this issue, see the November 30, 2004, Memorandum to Mark Ross, entitled ''Collapsing of Affiliated Producers,'' which is on file in the CRU.

Affiliation of Parties

Pursuant to sections 771(33)(E) and (F) of the Act, the Department has preliminarily determined that certain customers to whom RDM/CPFL sold silicomanganese during the period of review (POR) and whom RDM/CPFL identified as unaffiliated parties are, in fact, affiliated with RDM/CPFL. Specifically, the Department has determined that RDM/CPFL and some of its home-market customers are under the common control of CVRD, RDM/CPFL's parent company. According to section 771(33)(F) of the Act, two or more persons under common control with any other person shall be considered affiliated. Thus, we have preliminarily found these companies to be affiliated with RDM/CPFL. For a complete discussion of this issue, see the November 30, 2004, Memorandum to the File, entitled ''Analysis Memorandum for the Preliminary Results of the Administrative Review of the Antidumping Duty Order on Silicomanganese from Brazil'' (*Preliminary Results Analysis Memo*), which is on file in the CRU.

Comparisons to Normal Value

To determine whether sales of silicomanganese from Brazil were made in the United States at less than normal value, we compared the export price (EP) to the normal value.

When making comparisons in accordance with section 771(16) of the Act, we considered all products sold in the home market, as described in the ''Scope'' section of this notice, that were in the ordinary course of trade (*i.e.*, sales which passed the cost test) for purposes of determining appropriate product comparisons to U.S. sales.

Merchandise

The construction of control numbers is based on two product characteristics, quality grade and size. In its questionnaire responses, RDM/CPFL stated that, in the normal course of business, it classifies silicomanganese products into three grades: 12/16, 15/20, and 16/20. According to RDM/CPFL's description of these grades of silicomanganese, 12/16 has a silicon content between 12% and 16% (by weight), 15/20 has a silicon content between 15% and 20%, and 16/20 has a silicon content between 16% and 20%. RDM/CPFL also reported production costs segregated by these grades, as tracked in its cost accounting system. In its questionnaire response, RDM/CPFL explained that it assigned a quality grade to each home-market and U.S. sale based on silicomanganese quality grade standards as suggested by Brazilian Associacao Brasileira de Normas Technicas (ABNT). We found that the ABNT grade classification does not distinguish quality grades based on silicon content. In our July 20, 2004, supplemental questionnaire, we instructed RDM/CPFL to refine the assignment of the quality grade to each sale based on quality standards imposed by the American Society of Testing and Materials (ASTM), which requires quality grades of silicomanganese distinguished by silicon content. We further instructed RDM/CPFL to distinguish the assignment of a quality grade based on two grades and each grade's silicon content. In its assignment of a quality grade to each sale, RDM/

CPFL did not round the silicon content of each sale as suggested by ASTM standards. As such, we had to reconstruct control numbers to reflect the proper assignment of the quality grade based on the rounding procedures specified by ASTM standards. For more information on this topic, see the *Preliminary Results Analysis Memo.*

Export Price

For the price to the United States, we used EP, as defined in section 772(a) of the Act, because the subject merchandise was sold directly to the first unaffiliated purchaser in the United States prior to the date of importation. We based EP on the F.O.B. price to the first unaffiliated purchaser in the United States. We made deductions, where appropriate, consistent with section 772(c)(2) of the Act.

Normal Value

A. Home-Market Viability

Based on a comparison of the aggregate quantity of home-market and U.S. sales we determined that the quantity of foreign like product sold by RDM/CPFL in the exporting country was sufficient to permit a proper comparison with the sales of the subject merchandise to the United States, pursuant to section 773(a) of the Act. RDM/CPFL's quantity of sales in its home market was greater than five percent of its sales to the U.S. market. Therefore, in accordance with section 773(a)(1)(B)(i) of the Act, we based normal value on the prices at which the foreign like product was first sold for consumption in the exporting country in the usual commercial quantities and in the ordinary course of trade.

B. Arm's-Length Sales

RDM/CPFL made sales in the home market to affiliated and unaffiliated customers. The Department may calculate normal value based on a sale to an affiliated party only if it is satisfied that the price to the affiliated party is comparable to the price at which sales are made to parties not affiliated with the exporter or producer, *i.e.*, sales at arm's-length prices. *See* 19 CFR 351.403(c). We excluded sales to affiliated customers for consumption in the home market that we determined not to be at arm's-length prices from our analysis. To test whether these sales were made at arm's-length prices, the Department compared the prices of sales of comparable merchandise to affiliated and unaffiliated customers, net of movement charges, direct selling expenses, and packing. Pursuant to section 351.403(c) of the Department's regulations and in accordance with the Department's practice, when the prices charged to an affiliated party were, on average, between 98 and 102 percent of the prices charged to unaffiliated parties for merchandise comparable to that sold to the affiliated party, we determined that the sales to the affiliated party were at arm's-length prices. *See Antidumping Proceedings: Affiliated Party Sales in the Ordinary Course of Trade*, 67 FR 69186 (November 15, 2002). We included in our calculation of normal value those sales to affiliated parties that were made at arm's-length prices.

C. Cost of Production Analysis

Because the Department disregarded all of RDM/CPFL's home-market sales that failed the cost test in the most recently completed administrative review, we had reasonable grounds to believe or suspect that sales of the foreign like product under consideration for the determination of normal value in this review may have been made at prices below the cost of production (COP) as provided by section 773(b)(2)(A)(ii) of the Act. Therefore, pursuant to section 773(b)(1) of the Act, we conducted the COP investigation of sales by RDM/CPFL in the home market.

Based on the respondent's request, we allowed the cost-reporting period (CRP) to correspond with the 2003 calendar year, which is also RDM's fiscal year. Before making any price comparisons, we conducted the COP analysis described below.

1. Calculation of COP

We calculated COP, in accordance with section 773(b)(3) of the Act, based on the sum of the costs of materials and fabrication employed in producing the foreign like product, plus amounts for home-market selling, general, and administrative expenses. For the preliminary results of review, we relied on the COP information submitted by RDM/CPFL in its questionnaire responses, except, as stated below, in specific instances where the submitted costs were not appropriately quantified or valued. For a more detailed explanation of calculations described below and worksheets illustrating the calculations see the *Preliminary Analysis Memo.*

a. We weight-averaged the reported manufacturing costs for product reported as 16/20 grade silicomanganese and 15/20 grade silicomanganese to account for the refinements in the assignment of one product characteristic, quality grade, as described in the ''Merchandise'' section above.

b. We adjusted RDM/CPFL's reported cost of manufacturing (COM) to reflect the actual depreciation costs recorded in its financial accounting system.

c. We adjusted RDM/CPFL's reported COM to reflect the actual costs of inventory losses and other inventory adjustments recorded in its financial accounting system.

d. We adjusted RDM/CPFL's reported COM to include the omitted quantities for certain silicomanganese products that were manufactured during the CRP.

e. We adjusted RDM/CPFL's reported COM to account for purchases of certain types of manganese ore from affiliated parties at non-arm's-length prices.

f. We adjusted RDM/CPFL's reported COM to account for purchases of certain transportation services from affiliated parties at non-arm's-length prices, as well as other revisions to reported transportation costs.

g. We adjusted RDM/CPFL's reported COM to account for the revision to the submitted allocation methodology for conversion costs.

h. We adjusted RDM/CPFL's reported general and administrative expenses to exclude income items related to credits of PIS/COFINS taxes paid on purchases of raw materials that were used in the production of exported products.

i. We adjusted RDM/CPFL's reported COM to reflect additional exhaustion costs incurred in the production of charcoal.

j. We adjusted RDM/CPFL's reported COP value to reflect minor revisions to financial expenses and packing expenses.

k. Because we determined that the value assigned by RDM/CPFL to ferromanganese slag does not reasonably reflect the cost associated with the production and sale of silicomanganese, we, in our November 10, 2004, letter to interested parties, invited comments with respect to the valuation of ferromanganese slag. Based on the information submitted by RDM/CPFL and the petitioners in their November 17, 2004, letters, we calculated a value for ferromanganese slag. We adjusted RDM/CPFL's reported COM to reflect the calculated value for ferromanganese slag.

2. Test of Home-Market Prices

In accordance with section 773(b)(1) of the Act, we tested whether home-market sales of the foreign like product were made at prices below the COP within an extended period of time in substantial quantities and whether such prices permitted the recovery of all costs within a reasonable period of time. We compared model-specific COPs to the

reported home-market prices less any applicable movement charges.

3. Results of the COP Test

Pursuant to section 773(b)(2)(C) of the Act, when less than 20 percent of the respondent's sales of the foreign like product were at prices less than the COP, we did not disregard any below-cost sales of that product because the below-cost sales were not made in substantial quantities within an extended period of time. When 20 percent or more of the respondent's sales of the foreign like product during the POR were at prices less than the COP, we disregarded the below-cost sales because they were made in substantial quantities within an extended period of time pursuant to sections 773(b)(2)(B) and (C) of the Act and, based on comparisons of prices to weighted-average COPs for the POR, we determined that these sales were at prices which would not permit recovery of all costs within a reasonable period of time in accordance with section 773(b)(2)(D) of the Act. Based on this test, we disregarded below-cost sales for RDM/CPFL.

D. Calculation of Normal Value

Because we were able to find contemporaneous home-market sales made in the ordinary course of trade for a comparison to EP sales, in accordance with section 773(a)(1)(B) of the Act, we based normal value on the prices at which the foreign like product was sold for consumption in the home market. Home-market prices were based on ex-factory or delivered prices to unaffiliated purchasers. When applicable, we made adjustments for differences in packing and for movement expenses in accordance with sections 773(a)(6)(A) and (B) of the Act. We also made adjustments for differences in circumstances of sale in accordance with section 773(a)(6)(C)(iii) of the Act and section 351.410 of the Department's regulations. Specifically, we made circumstances-of-sale adjustments by deducting home-market direct selling expenses from and adding U.S. direct selling expenses to normal value.

Preliminary Results of Review

As a result of our review, we preliminarily determine that a margin of 0.00 percent exists for RDM/CPFL for the period December 1, 2002, through November 30, 2003.

Pursuant to section 351.224(b) of the Department's regulations, the Department will disclose to parties calculations performed in connection with these preliminary results within five days of the date of publication of this notice. Any interested party may request a hearing within 30 days of publication of this notice. A hearing, if requested, will be held at the main Department building. We will notify parties of the exact date, time, and place for any such hearing.

Issues raised in hearings will be limited to those raised in the respective case and rebuttal briefs. Case briefs from interested parties may be filed no later than 30 days after publication of this notice. Rebuttal briefs, limited to the issues raised in case briefs, may be submitted no later than five days after the deadline for filing case briefs. Parties who submit case or rebuttal briefs in this proceeding are requested to submit with each argument (1) a statement of the issue, and (2) a brief summary of the argument with an electronic version included.

The Department will publish a notice of final results of this administrative review, which will include the results of its analysis of issues raised in the case briefs, within 120 days from the publication of these preliminary results.

Assessment

The Department shall determine, and Customs and Border Protection (CBP) shall assess, antidumping duties on all appropriate entries. Upon completion of this review, the Department will issue appraisement instructions directly to the CBP.

Further, the following deposit requirements will be effective upon publication of the notice of final results of administrative review for all shipments of silicomanganese entered, or withdrawn from warehouse, for consumption on or after the date of publication, as provided by section 751(a)(1) of the Act: (1) The cash-deposit rate for RDM/CPFL will be the rate established in the final results of review; (2) for previously reviewed or investigated companies not mentioned above, the cash-deposit rate will continue to be the company-specific rate published for the most recent period; (3) if the exporter is not a firm covered in this review, a prior review, or the less-than-fair-value investigation (LTFV), but the manufacturer is, the cash-deposit rate will be the rate established for the most recent period for the manufacturer of the merchandise; and (4) if neither the exporter nor the producer is a firm covered in this review, a prior review, or the LTFV investigation, the cash deposit rate shall be 17.60 percent, the all-others rate established in the LTFV investigation. *See Notice of Final Determination of Sales at Less than Fair Value: Silicomanganese from Brazil*, 59 FR 55432 (November 7, 1994). These deposit requirements, when imposed, shall remain in effect until publication of the final results of the next administrative review.

This notice serves as a preliminary reminder to importers of their responsibility under 19 CFR 351.402(f) to file a certificate regarding the reimbursement of antidumping duties prior to liquidation of the relevant entries during this review period. Failure to comply with this requirement could result in the Secretary's presumption that reimbursement of antidumping duties occurred and the subsequent assessment of double antidumping duties.

This administrative review and notice are in accordance with sections 751(a)(1) and 777(i)(1) of the Act.

Dated: November 30, 2004.

James J. Jochum,

Assistant Secretary for Import Administration.

[FR Doc. E4–3558 Filed 12–7–04; 8:45 am]

BILLING CODE 3510–DS–P

DEPARTMENT OF COMMERCE

National Oceanic and Atmospheric Administration

Availability of Seats for the Monterey Bay National Marine Sanctuary Advisory Council

AGENCY: National Marine Sanctuary Program (NMSP), National Ocean Service (NOS), National Oceanic and Atmospheric Administration, Department of Commerce (DOC).

ACTION: Notice and request for applications.

SUMMARY: The Monterey Bay National Marine Sanctuary (MBNMS or Sanctuary) is seeking applicants for the following seats on its Sanctuary Advisory Council: Education, Diving, Tourism, At-Large (one seat), Commercial Fishing (alternate) and Research (alternate). Applicants chosen for the Education, Diving, Tourism and At-large seats should expect to serve until April 2008. Applicants chosen for the Commercial Fishing (alternate) and Research (alternate) will be filling seats previously vacated and should expect to serve until February 2007. Applicants are chosen based upon their particular expertise and experience in relation to the seat for which they are applying; community and professional affiliations: philosophy regarding the protection and management of marine resources; and possibly the length of residence in the area affected by the Sanctuary.

DATES: Applications are due by January 21, 2005.

ADDRESSES: Application kits may be obtained from Nicole Capps at the Monterey Bay National Marine Sanctuary, 299 Foam Street, Monterey, California 93940. Completed applications should be sent to the same address.

FOR FURTHER INFORMATION CONTACT: Nicole Capps at (831) 647–4206, or *Nicole.Capps@noaa.gov.*

SUPPLEMENTARY INFORMATION: The MBNMS Advisory Council was established in March 1994 to assure continued public participation in the management of the Sanctuary. Since its establishment, the Advisory Council has played a vital role in decisions affecting the Sanctuary along the central California coast.

The Advisory Council's twenty voting members represent a variety of local user groups, as well as the general public, plus seven local, state and Federal governmental jurisdictions. In addition, the respective managers or superintendents for the four California National Marine Sanctuaries (Channel Islands National Marine Sanctuary, Cordell Bank National Marine Sanctuary, Gulf of the Farallones National Marine Sanctuary and the Monterey Bay National Marine Sanctuary) and the Elkhorn Slough National Estuarine Research Reserve sit as non-voting members.

Four working groups support the Advisory Council: The Research Activity Panel (''RAP'') chaired by the Research Representative, the Sanctuary Education Panel (''SEP'') chaired by the Education Representative, the Conservation Working Group (''CWG'') chaired by the Conservation Representative, and the Business and Tourism Activity Panel (''BTAP'') chaired by the Business/Industry Representative, each dealing with matters concerning research, education, conservation and human use. The working groups are composed of experts from the appropriate fields of interest and meet monthly, or bi-monthly, serving as invaluable advisors to the Advisory Council and the Sanctuary Superintendent.

The Advisory Council represents the coordination link between the Sanctuary and the state and Federal management agencies, user groups, researchers, educators, policy makers, and other various groups that help to focus efforts and attention on the central California coastal and marine ecosystems.

The Advisory Council functions in an advisory capacity to the Sanctuary Superintendent and is instrumental in helping develop policies, program goals, and identify education, outreach, research, long-term monitoring, resource protection, and revenue enhancement priorities. The Advisory Council works in concert with the Sanctuary Superintendent by keeping him or her informed about issues of concern throughout the Sanctuary, offering recommendations on specific issues, and aiding the Superintendent in achieving the goals of the Sanctuary Program within the context of California's marine programs and policies.

Authority: 15 U.S.C. Sections 1431, *et seq.*

(Federal Domestic Assistance Catalog Number 11.429 Marine Sanctuary Program)

Dated: November 28, 2004.

Daniel J. Basta,

Director, National Marine Sanctuary Program, National Ocean Service, National Oceanic and Atmospheric Administration.

[FR Doc. 04–26855 Filed 12–7–04; 8:45 am]

BILLING CODE 3510–NK–M

DEPARTMENT OF DEFENSE

GENERAL SERVICES ADMINISTRATION

NATIONAL AERONAUTICS AND SPACE ADMINISTRATION

[OMB Control No. 9000–0037]

Federal Acquisition Regulation; Submission for OMB Review; Standard Form 1417, Presolicitation Notice and Response

AGENCIES: Department of Defense (DOD), General Services Administration (GSA), and National Aeronautics and Space Administration (NASA).

ACTION: Notice of request for comments regarding an extension to an existing OMB clearance (9000–0037).

SUMMARY: Under the provisions of the Paperwork Reduction Act of 1995 (44 U.S.C. Chapter 35), the Federal Acquisition Regulation (FAR) Secretariat has submitted to the Office of Management and Budget (OMB) a request to review and approve an extension of a currently approved information collection requirement concerning Standard Form 1417, Presolicitation Notice and Response. A request for public comments was published at 69 FR 53419, September 1, 2004. No comments were received.

Public comments are particularly invited on: Whether this collection of information is necessary for the proper performance of functions of the FAR, and whether it will have practical utility; whether our estimate of the public burden of this collection of information is accurate, and based on valid assumptions and methodology; ways to enhance the quality, utility, and clarity of the information to be collected; and ways in which we can minimize the burden of the collection of information on those who are to respond, through the use of appropriate technological collection techniques or other forms of information technology.

DATES: Submit comments on or before January 7, 2005.

ADDRESSES: Submit comments regarding this burden estimate or any other aspect of this collection of information, including suggestions for reducing this burden to the General Services Administration, FAR Secretariat (VR), 1800 F Street, NW, Room 4035, Washington, DC 20405. Please cite OMB Control No. 9000–0037, Standard Form 1417, Presolicitation Notice and Response in all correspondence.

FOR FURTHER INFORMATION CONTACT Cecelia Davis, Contract Policy Division, GSA (202) 219–0202.

SUPPLEMENTARY INFORMATION:

A. Purpose

Presolicitation notices are used by the Government for several reasons, one of which is to aid prospective contractors in submitting proposals without undue expenditure of effort, time, and money. The Government also uses the presolicitation notices to control printing and mailing costs. The presolicitation notice response is used to determine the number of solicitation documents needed and to assure that interested offerors receive the solicitation documents. The responses are placed in the contract file and referred to when solicitation documents are ready for mailing. After mailing, the responses remain in the contract file and become a matter of record.

B. Annual Reporting Burden

Respondents: 5,310.
Responses Per Respondent: 8.
Total Responses: 42,480.
Hours Per Response: .08.
Total Burden Hours: 3,398.40.
Obtaining Copies of Proposals: Requesters may obtain a copy of the information collection documents from the General Services Administration, FAR Secretariat (VR), Room 4035, Washington, DC 20405, telephone (202) 501–4755. Please cite OMB Control No. 9000–0037, Standard Form 1417, Presolicitation Notice and Response in all correspondence.

Dated: November 30, 2004

Laura Auletta

Director, Contract Policy Division.

[FR Doc. 04–26880 Filed 12–7–04; 8:45 am]

BILLING CODE 6820–EP–S

DEPARTMENT OF ENERGY

Federal Energy Regulatory Commission

[Docket No. RP95–408–060]

Columbia Gas Transmission Corporation; Notice of Filing of Refund

December 2, 2004.

Take notice that on November 19, 2004, Columbia Gas Transmission Corporation (Columbia) tendered for filing a report on the flow-back to customers.

Any person desiring to protest this filing must file in accordance with Rule 211 of the Commission's Rules of Practice and Procedure (18 CFR 385.211). Protests to this filing will be considered by the Commission in determining the appropriate action to be taken, but will not serve to make protestants parties to the proceeding. Such protests must be filed on or before the date as indicated below. Anyone filing a protest must serve a copy of that document on all the parties to the proceeding.

The Commission encourages electronic submission of protests in lieu of paper using the ''eFiling'' link at *http://www.ferc.gov*. Persons unable to file electronically should submit an original and 14 copies of the protest to the Federal Energy Regulatory Commission, 888 First Street, NE., Washington, DC 20426.

This filing is accessible on-line at *http://www.ferc.gov*, using the ''eLibrary'' link and is available for review in the Commission's Public Reference Room in Washington, DC. There is an ''eSubscription'' link on the Web site that enables subscribers to receive e-mail notification when a document is added to a subscribed docket(s). For assistance with any FERC Online service, please e-mail *FERCOnlineSupport@ferc.gov*, or call (866) 208–3676 (toll free). For TTY, call (202) 502–8659.

Protest Date: 5 p.m. Eastern Time on December 8, 2004.

Magalie R. Salas,

Secretary.

[FR Doc. E4–3538 Filed 12–7–04; 8:45 am]

BILLING CODE 6717–01–P

DEPARTMENT OF ENERGY

Federal Energy Regulatory Commission

[Docket No. RP05–21–001]

Columbia Gas Transmission Corporation; Notice of Compliance Filing

December 2, 2004.

Take notice that on November 22, 2004, Columbia Gas Transmission Corporation (Columbia), in compliance with the Commission's order issued on November 5, 2004, tendered for filing as part of its FERC Gas Tariff, Second Revised Volume No. 1, Eighth Revised Sheet No. 500B, with an effective date of November 1, 2004.

Columbia states that copies of the filing is being served upon all of Columbia's firm customers, interruptible customers, and affected state commissions.

Any person desiring to protest this filing must file in accordance with Rule 211 of the Commission's Rules of Practice and Procedure (18 CFR 385.211). Protests to this filing will be considered by the Commission in determining the appropriate action to be taken, but will not serve to make protestants parties to the proceeding. Such protests must be filed in accordance with the provisions of Section 154.210 of the Commission's regulations (18 CFR 154.210). Anyone filing a protest must serve a copy of that document on all the parties to the proceeding.

The Commission encourages electronic submission of protests in lieu of paper using the ''eFiling'' link at *http://www.ferc.gov.* Persons unable to file electronically should submit an original and 14 copies of the protest to the Federal Energy Regulatory Commission, 888 First Street, NE., Washington, DC 20426.

This filing is accessible on-line at *http://www.ferc.gov,* using the ''eLibrary'' link and is available for review in the Commission's Public Reference Room in Washington, DC. There is an ''eSubscription'' link on the Web site that enables subscribers to receive e-mail notification when a document is added to a subscribed docket(s). For assistance with any FERC Online service, please e-mail *FERCOnlineSupport@ferc.gov,* or call (866) 208–3676 (toll free). For TTY, call (202) 502–8659.

Magalie R. Salas,

Secretary.

[FR Doc. E4–3544 Filed 12–7–04; 8:45 am]

BILLING CODE 6717–01–P

DEPARTMENT OF ENERGY

Federal Energy Regulatory Commission

Columbia Gulf Transmission Company; Notice of Filing of Refund

December 2, 2004.

Take notice that on November 19, 2004, Columbia Gulf Transmission Company (Columbia Gulf) tendered for filing a report on the flow-back to customers.

Any person desiring to protest this filing must file in accordance with Rule 211 of the Commission's Rules of Practice and Procedure (18 CFR 385.211). Protests to this filing will be considered by the Commission in determining the appropriate action to be taken, but will not serve to make protestants parties to the proceeding. Such protests must be filed on or before the date as indicated below. Anyone filing a protest must serve a copy of that document on all the parties to the proceeding.

The Commission encourages electronic submission of protests in lieu of paper using the ''eFiling'' link at *http://www.ferc.gov.* Persons unable to file electronically should submit an original and 14 copies of the protest to the Federal Energy Regulatory Commission, 888 First Street, NE., Washington, DC 20426.

This filing is accessible on-line at *http://www.ferc.gov,* using the ''eLibrary'' link and is available for review in the Commission's Public Reference Room in Washington, DC. There is an ''eSubscription'' link on the Web site that enables subscribers to receive email notification when a document is added to a subscribed docket(s). For assistance with any FERC Online service, please email *FERCOnlineSupport@ferc.gov,* or call (866) 208–3676 (toll free). For TTY, call (202) 502–8659.

Protest Date: 5 p.m. eastern time on December 8, 2004.

Magalie R. Salas,

Secretary.

[FR Doc. E4–3554 Filed 12–7–04; 8:45 am]

BILLING CODE 6717–01–P

DEPARTMENT OF ENERGY

Federal Energy Regulatory Commission

[Docket No. RP05–96–000]

El Paso Natural Gas Company; Notice of Proposed Changes in FERC Gas Tariff

December 2, 2004.

Take notice that on November 30, 2004, El Paso Natural Gas Company (El Paso) tendered for filing as part of its FERC Gas Tariff, Second Revised Volume No. 1–A, Twelfth Revised Sheet No. 29, to become effective January 1, 2005.

El Paso states that the tariff sheet is being filed to adjust its fuel charges in accordance with its tariff.

Any person desiring to intervene or to protest this filing must file in accordance with Rules 211 and 214 of the Commission's Rules of Practice and Procedure (18 CFR 385.211 and 385.214). Protests will be considered by the Commission in determining the appropriate action to be taken, but will not serve to make protestants parties to the proceeding. Any person wishing to become a party must file a notice of intervention or motion to intervene, as appropriate. Such notices, motions, or protests must be filed in accordance with the provisions of Section 154.210 of the Commission's regulations (18 CFR 154.210). Anyone filing an intervention or protest must serve a copy of that document on the Applicant. Anyone filing an intervention or protest on or before the intervention or protest date need not serve motions to intervene or protests on persons other than the Applicant.

The Commission encourages electronic submission of protests and interventions in lieu of paper using the ''eFiling'' link at *http://www.ferc.gov.* Persons unable to file electronically should submit an original and 14 copies of the protest or intervention to the Federal Energy Regulatory Commission, 888 First Street, NE., Washington, DC 20426.

This filing is accessible on-line at *http://www.ferc.gov,* using the ''eLibrary'' link and is available for review in the Commission's Public Reference Room in Washington, DC. There is an ''eSubscription'' link on the Web site that enables subscribers to receive e-mail notification when a document is added to a subscribed docket(s). For assistance with any FERC Online service, please e-mail *FERCOnlineSupport@ferc.gov,* or call (866) 208–3676 (toll free). For TTY, call (202) 502–8659.

Magalie R. Salas,

Secretary.

[FR Doc. E4–3552 Filed 12–7–04; 8:45 am]

BILLING CODE 6717–01–P

DEPARTMENT OF ENERGY

Federal Energy Regulatory Commission

[Docket No. RP05–97–000]

El Paso Natural Gas Company; Notice of Proposed Changes in FERC Gas Tariff

December 2, 2004.

Take notice that on November 30, 2004, El Paso Natural Gas Company (El Paso) tendered for filing as part of its FERC Gas Tariff, Second Revised Volume No. 1–A, the following tariff sheets, to become effective January 1, 2005:

Thirtieth Revised Sheet No. 20,
2nd Revised Fifth Revised Sheet No. 21,
Twenty-Fourth Revised Sheet No. 22,
Twenty-Ninth Revised Sheet No. 23,
2nd Revised Thirty-Fifth Revised Sheet No. 24,
Thirtieth Revised Sheet No. 26,
Thirtieth Revised Sheet No. 27,
Fifth Revised Sheet No. 113D,
Ninth Revised Sheet No. 117,
Tenth Revised Sheet No. 118,
Third Revised Sheet No. 118A.

El Paso states that the tariff sheets are being filed to adjust its base rates and effective unit rates for inflation in accordance with its tariff, and to update the partial demand charge credit.

Any person desiring to intervene or to protest this filing must file in accordance with Rules 211 and 214 of the Commission's Rules of Practice and Procedure (18 CFR 385.211 and 385.214). Protests will be considered by the Commission in determining the appropriate action to be taken, but will not serve to make protestants parties to the proceeding. Any person wishing to become a party must file a notice of intervention or motion to intervene, as appropriate. Such notices, motions, or protests must be filed in accordance with the provisions of Section 154.210 of the Commission's regulations (18 CFR 154.210). Anyone filing an intervention or protest must serve a copy of that document on the Applicant. Anyone filing an intervention or protest on or before the intervention or protest date need not serve motions to intervene or protests on persons other than the Applicant.

The Commission encourages electronic submission of protests and interventions in lieu of paper using the ''eFiling'' link at *http://www.ferc.gov.* Persons unable to file electronically should submit an original and 14 copies of the protest or intervention to the Federal Energy Regulatory Commission, 888 First Street, NE., Washington, DC 20426.

This filing is accessible on-line at *http://www.ferc.gov*, using the ''eLibrary'' link and is available for review in the Commission's Public Reference Room in Washington, DC. There is an ''eSubscription'' link on the Web site that enables subscribers to receive email notification when a document is added to a subscribed docket(s). For assistance with any FERC Online service, please email *FERCOnlineSupport@ferc.gov*, or call (866) 208–3676 (toll free). For TTY, call (202) 502–8659.

Magalie R. Salas,

Secretary.

[FR Doc. E4–3553 Filed 12–7–04; 8:45 am]

BILLING CODE 6717–01–P

DEPARTMENT OF ENERGY

Federal Energy Regulatory Commission

[Docket No. RP04–136–007]

Iroquois Gas Transmission System, L.P.; Notice of Compliance Filing

December 2, 2004.

Take notice that on November 30, 2004, Iroquois Gas Transmission System, L.P. (Iroquois) tendered for filing Substitute First Revised Sheet No. 4C to Iroquois's FERC Gas Tariff, First Revised Volume No. 1, with an effective date of December 1, 2004.

Iroquois states that copies of its filing were served on all jurisdictional customers and interested state regulatory agencies and all parties to the proceeding.

Any person desiring to protest this filing must file in accordance with Rule 211 of the Commission's Rules of Practice and Procedure (18 CFR 385.211). Protests to this filing will be considered by the Commission in determining the appropriate action to be taken, but will not serve to make protestants parties to the proceeding. Such protests must be filed in accordance with the provisions of Section 154.210 of the Commission's regulations (18 CFR 154.210). Anyone filing a protest must serve a copy of that document on all the parties to the proceeding.

The Commission encourages electronic submission of protests in lieu

of paper using the ''eFiling'' link at *http://www.ferc.gov.* Persons unable to file electronically should submit an original and 14 copies of the protest to the Federal Energy Regulatory Commission, 888 First Street, NE., Washington, DC 20426.

This filing is accessible on-line at *http://www.ferc.gov,* using the ''eLibrary'' link and is available for review in the Commission's Public Reference Room in Washington, DC. There is an ''eSubscription'' link on the Web site that enables subscribers to receive e-mail notification when a document is added to a subscribed docket(s). For assistance with any FERC Online service, please e-mail *FERCOnlineSupport@ferc.gov,* or call (866) 208–3676 (toll free). For TTY, call (202) 502–8659.

Magalie R. Salas,

Secretary.

[FR Doc. E4–3542 Filed 12–7–04; 8:45 am]

BILLING CODE 6717–01–P

DEPARTMENT OF ENERGY

Federal Energy Regulatory Commission

[Docket No. RP05–92–000]

National Fuel Gas Supply Corporation; Notice of Tariff Filing

December 2, 2004.

Take notice that on November 30, 2004, National Fuel Gas Supply Corporation (National) tendered for filing as part of its FERC Gas Tariff, Fourth Revised Volume No. 1, Seventieth Revised Sheet No. 9, to become effective December 1, 2004.

Any person desiring to intervene or to protest this filing must file in accordance with Rules 211 and 214 of the Commission's Rules of Practice and Procedure (18 CFR 385.211 and 385.214). Protests will be considered by the Commission in determining the appropriate action to be taken, but will not serve to make protestants parties to the proceeding. Any person wishing to become a party must file a notice of intervention or motion to intervene, as appropriate. Such notices, motions, or protests must be filed in accordance with the provisions of Section 154.210 of the Commission's regulations (18 CFR 154.210). Anyone filing an intervention or protest must serve a copy of that document on the Applicant. Anyone filing an intervention or protest on or before the intervention or protest date need not serve motions to intervene or protests on persons other than the Applicant.

The Commission encourages electronic submission of protests and interventions in lieu of paper using the ''eFiling'' link at *http://www.ferc.gov.* Persons unable to file electronically should submit an original and 14 copies of the protest or intervention to the Federal Energy Regulatory Commission, 888 First Street, NE., Washington, DC 20426.

This filing is accessible on-line at *http://www.ferc.gov,* using the ''eLibrary'' link and is available for review in the Commission's Public Reference Room in Washington, DC. There is an ''eSubscription'' link on the Web site that enables subscribers to receive e-mail notification when a document is added to a subscribed docket(s). For assistance with any FERC Online service, please e-mail *FERCOnlineSupport@ferc.gov,* or call (866) 208–3676 (toll free). For TTY, call (202) 502–8659.

Magalie R. Salas,

Secretary.

[FR Doc. E4–3548 Filed 12–7–04; 8:45 am]

BILLING CODE 6717–01–P

DEPARTMENT OF ENERGY

Federal Energy Regulatory Commission

[Docket No. RP05–93–000]

National Fuel Gas Supply Corporation; Notice of Tariff Filing

December 2, 2004.

Take notice that on November 30, 2004, National Fuel Gas Supply Corporation (National) tendered for filing as part of its FERC Gas Tariff, Fourth Revised Volume No. 1, Seventy First Revised Sheet No. 9 and Eighth Revised Sheet No. 43, with a proposed effective date of January 1, 2005.

Any person desiring to intervene or to protest this filing must file in accordance with Rules 211 and 214 of the Commission's Rules of Practice and Procedure (18 CFR 385.211 and 385.214). Protests will be considered by the Commission in determining the appropriate action to be taken, but will not serve to make protestants parties to the proceeding. Any person wishing to become a party must file a notice of intervention or motion to intervene, as appropriate. Such notices, motions, or protests must be filed in accordance with the provisions of Section 154.210 of the Commission's regulations (18 CFR 154.210). Anyone filing an intervention or protest must serve a copy of that document on the Applicant. Anyone filing an intervention or protest on or before the intervention or protest date need not serve motions to intervene or protests on persons other than the Applicant.

The Commission encourages electronic submission of protests and interventions in lieu of paper using the ''eFiling'' link at *http://www.ferc.gov.* Persons unable to file electronically should submit an original and 14 copies of the protest or intervention to the Federal Energy Regulatory Commission, 888 First Street, NE., Washington, DC 20426.

This filing is accessible on-line at *http://www.ferc.gov,* using the ''eLibrary'' link and is available for review in the Commission's Public Reference Room in Washington, DC. There is an ''eSubscription'' link on the Web site that enables subscribers to receive email notification when a document is added to a subscribed docket(s). For assistance with any FERC Online service, please email *FERCOnlineSupport@ferc.gov,* or call (866) 208–3676 (toll free). For TTY, call (202) 502–8659.

Magalie R. Salas,

Secretary.

[FR Doc. E4–3549 Filed 12–7–04; 8:45 am]

BILLING CODE 6717–01–P

DEPARTMENT OF ENERGY

Federal Energy Regulatory Commission

[Docket No. RP05–94–000]

National Fuel Gas Supply Corporation; Notice of Proposed Changes in FERC Gas Tariff

December 2, 2004.

Take notice that on November 30, 2004, National Fuel Gas Supply Corporation (National) tendered for filing as part of its FERC Gas Tariff, Fourth Revised Volume No. 1, Twenty Fifth Revised Sheet No. 8, with a proposed effective date of January 1, 2005.

National states that the proposed tariff sheet reflects an adjustment to recover through National's EFT rate the costs associated with the Transportation and Storage Cost Adjustment (TSCA) provision set forth in section 23 of the General Terms and Conditions of National's FERC Gas Tariff.

National further states that copies of this compliance filing were served upon the Company's jurisdictional customers and the regulatory commissions of the States of New York, Ohio, Pennsylvania, Delaware, Massachusetts, and New Jersey.

Any person desiring to intervene or to protest this filing must file in accordance with Rules 211 and 214 of the Commission's Rules of Practice and Procedure (18 CFR 385.211 and 385.214). Protests will be considered by the Commission in determining the appropriate action to be taken, but will not serve to make protestants parties to the proceeding. Any person wishing to become a party must file a notice of intervention or motion to intervene, as appropriate. Such notices, motions, or protests must be filed in accordance with the provisions of Section 154.210 of the Commission's regulations (18 CFR 154.210). Anyone filing an intervention or protest must serve a copy of that document on the Applicant. Anyone filing an intervention or protest on or before the intervention or protest date need not serve motions to intervene or protests on persons other than the Applicant.

The Commission encourages electronic submission of protests and interventions in lieu of paper using the ''eFiling'' link at *http://www.ferc.gov.* Persons unable to file electronically should submit an original and 14 copies of the protest or intervention to the Federal Energy Regulatory Commission, 888 First Street, NE., Washington, DC 20426.

This filing is accessible on-line at *http://www.ferc.gov,* using the ''eLibrary'' link and is available for review in the Commission's Public Reference Room in Washington, DC. There is an ''eSubscription'' link on the Web site that enables subscribers to receive e-mail notification when a document is added to a subscribed docket(s). For assistance with any FERC Online service, please e-mail *FERCOnlineSupport@ferc.gov,* or call (866) 208–3676 (toll free). For TTY, call (202) 502–8659.

Magalie R. Salas,

Secretary.

[FR Doc. E4–3550 Filed 12–7–04; 8:45 am]

BILLING CODE 6717–01–P

DEPARTMENT OF ENERGY

Federal Energy Regulatory Commission

[Docket No. RP04–51–001]

Paiute Pipeline Company; Notice of Compliance Filing

December 2, 2004.

Take notice that on November 30, 2004, Paiute Pipeline Company (Paiute) tendered for filing as part of its FERC Gas Tariff, Second Revised Volume No. 1–A, the following tariff sheets to be effective December 9, 2003:

Fourth Revised Sheet No. 22
Substitute First Revised Sheet No. 82
Substitute Fourth Revised Sheet No. 89A
Substitute Second Revised Sheet No. 100
Original Sheet No. 100A
Substitute Second Revised Sheet No. 101
Original Sheet No. 101A
Substitute Second Revised Sheet No. 102
Substitute Original Sheet No. 102A

Paiute also submitted the following tariff sheets to be effective December 30, 2004:

Second Revised Sheet No. 25B
First Revised Sheet No. 25C
Sixth Revised Sheet No. 63
Fourth Revised Sheet No. 63A
Original Sheet No. 63A.1
Fourth Revised Sheet No. 81
Original Sheet No. 81A

Paiute indicates that the purpose of its filing is to comply with the Commission's order issued on November 3, 2004 in Docket No. RP04–51–000.

Paiute states that copies of its filing have been served upon all of its customers and interested state regulatory commissions, as well as upon all parties to this proceeding.

Any person desiring to protest this filing must file in accordance with Rule 211 of the Commission's Rules of Practice and Procedure (18 CFR 385.211). Protests to this filing will be considered by the Commission in determining the appropriate action to be taken, but will not serve to make protestants parties to the proceeding. Such protests must be filed in accordance with the provisions of Section 154.210 of the Commission's regulations (18 CFR 154.210). Anyone filing a protest must serve a copy of that document on all the parties to the proceeding.

The Commission encourages electronic submission of protests in lieu of paper using the ''eFiling'' link at *http://www.ferc.gov.* Persons unable to file electronically should submit an original and 14 copies of the protest to the Federal Energy Regulatory Commission, 888 First Street, NE., Washington, DC 20426.

This filing is accessible on-line at *http://www.ferc.gov,* using the ''eLibrary'' link and is available for review in the Commission's Public Reference Room in Washington, DC. There is an ''eSubscription'' link on the Web site that enables subscribers to receive e-mail notification when a document is added to a subscribed docket(s). For assistance with any FERC Online service, please e-mail *FERCOnlineSupport@ferc.gov,* or call (866) 208–3676 (toll free). For TTY, call (202) 502–8659.

Magalie R. Salas,

Secretary.

[FR Doc. E4–3543 Filed 12–7–04; 8:45 am]

BILLING CODE 6717–01–P

DEPARTMENT OF ENERGY

Federal Energy Regulatory Commission

[Docket No. AC05–11–000]

Public Service Company of New Mexico; Notice of Filing

December 2, 2004.

Take notice that on November 15, 2004, Public Service Company of New Mexico (PNM) submitted a request for clarification of the Commission's accounting regulations for expenditures related to the construction of transmission plants. PNM proposes to capitalize cost incurred to operate more expensive loadside generation or schedule the energy related to loadside power purchases when it takes lines and stations out of service to accommodate the construction of transmission assets.

Any person desiring to intervene or to protest this filing must file in accordance with Rules 211 and 214 of the Commission's Rules of Practice and Procedure (18 CFR 385.211, 385.214). Protests will be considered by the Commission in determining the appropriate action to be taken, but will not serve to make protestants parties to the proceeding. Any person wishing to become a party must file a notice of intervention or motion to intervene, as appropriate. Such notices, motions, or protests must be filed on or before the comment date. Anyone filing a motion to intervene or protest must serve a copy of that document on the Applicant. On or before the comment date, it is not necessary to serve motions to intervene or protests on persons other than the Applicant.

The Commission encourages electronic submission of protests and interventions in lieu of paper using the ''eFiling'' link at *http://www.ferc.gov.* Persons unable to file electronically should submit an original and 14 copies of the protest or intervention to the Federal Energy Regulatory Commission, 888 First Street, NE., Washington, DC 20426.

This filing is accessible on-line at *http://www.ferc.gov,* using the ''eLibrary'' link and is available for review in the Commission's Public Reference Room in Washington, DC. There is an ''eSubscription'' link on the

Web site that enables subscribers to receive e-mail notification when a document is added to a subscribed docket(s). For assistance with any FERC Online service, please e-mail *FERCOnlineSupport@ferc.gov,* or call (866) 208–3676 (toll free). For TTY, call (202) 502–8659.

Comment Date: 5 p.m. Eastern Time on December 16, 2004.

Magalie R. Salas,

Secretary.

[FR Doc. E4–3556 Filed 12–7–04; 8:45 am]

BILLING CODE 6717–01–P

DEPARTMENT OF ENERGY

Federal Energy Regulatory Commission

[Docket No. EL05–34–000]

Southern Indiana Gas and Electric Company v. Midwest Independent Transmission System Operator, Inc.; Notice of Complaint

December 2, 2004.

Take notice that on December 1, 2004, Southern Indiana Gas and Electric Company (Southern Indiana) tendered for filing complaint, pursuant to section 206 of the Federal Power Act and Rule 206 of the Commission's regulations, against the Midwest Independent Transmission System Operator, Inc. (Midwest ISO). Southern Indiana requests that the Commission order the Midwest ISO reduce the amount of FTRs that the Midwest ISO has allocated to Grandfathered Agreement No. 343. Southern Indiana requests Track Processing for the complaint.

Southern Indiana states that it served a copy of the filing by electronic mail on the respondent.

Any person desiring to intervene or to protest this filing must file in accordance with Rules 211 and 214 of the Commission's Rules of Practice and Procedure (18 CFR 385.211 and 385.214). Protests will be considered by the Commission in determining the appropriate action to be taken, but will not serve to make protestants parties to the proceeding. Any person wishing to become a party must file a notice of intervention or motion to intervene, as appropriate. The Respondent's answer and all interventions, or protests must be filed on or before the comment date. The Respondent's answer, motions to intervene, and protests must be served on the Complainants.

The Commission encourages electronic submission of protests and interventions in lieu of paper using the ''eFiling'' link at *http://www.ferc.gov.* Persons unable to file electronically should submit an original and 14 copies of the protest or intervention to the Federal Energy Regulatory Commission, 888 First Street, NE., Washington, DC 20426.

This filing is accessible on-line at *http://www.ferc.gov,* using the ''eLibrary'' link and is available for review in the Commission's Public Reference Room in Washington, DC. There is an ''eSubscription'' link on the Web site that enables subscribers to receive e-mail notification when a document is added to a subscribed docket(s). For assistance with any FERC Online service, please e-mail *FERCOnlineSupport@ferc.gov,* or call (866) 208–3676 (toll free). For TTY, call (202) 502–8659.

Comment Date: December 9, 2004.

Magalie R. Salas,

Secretary.

[FR Doc. E4–3540 Filed 12–7–04; 8:45 am]

BILLING CODE 6717–01–P

DEPARTMENT OF ENERGY

Federal Energy Regulatory Commission

[Docket No. RP05–90–000]

Southern Star Central Gas Pipeline, Inc.; Notice of Filing of Operational Flow Order Report

December 2, 2004.

Take notice that on November 24, 2004, Southern Star Central Gas Pipeline, Inc. (Southern Star), tendered for filing, pursuant to Article 10.3 of the General Terms and Conditions of its FERC Gas Tariff, its report of Operational Flow Order penalty revenues and refunds.

Southern Star states that copies of the filing were served on all jurisdictional customers and interested state commissions.

Any person desiring to intervene or to protest this filing must file in accordance with Rules 211 and 214 of the Commission's Rules of Practice and Procedure (18 CFR 385.211 and 385.214). Protests will be considered by the Commission in determining the appropriate action to be taken, but will not serve to make protestants parties to the proceeding. Any person wishing to become a party must file a notice of intervention or motion to intervene, as appropriate. Such notices, motions, or protests must be filed on or before the date as indicated below. Anyone filing an intervention or protest must serve a copy of that document on the Applicant. Anyone filing an intervention or protest on or before the intervention or protest date need not serve motions to intervene or protests on persons other than the Applicant.

The Commission encourages electronic submission of protests and interventions in lieu of paper using the ''eFiling'' link at *http://www.ferc.gov.* Persons unable to file electronically should submit an original and 14 copies of the protest or intervention to the Federal Energy Regulatory Commission, 888 First Street, NE., Washington, DC 20426.

This filing is accessible on-line at *http://www.ferc.gov,* using the ''eLibrary'' link and is available for review in the Commission's Public Reference Room in Washington, DC. There is an ''eSubscription'' link on the Web site that enables subscribers to receive e-mail notification when a document is added to a subscribed docket(s). For assistance with any FERC Online service, please e-mail *FERCOnlineSupport@ferc.gov,* or call (866) 208–3676 (toll free). For TTY, call (202) 502–8659.

Intervention and Protest Date: 5 p.m. Eastern Time on December 8, 2004.

Magalie R. Salas,

Secretary.

[FR Doc. E4–3546 Filed 12–7–04; 8:45 am]

BILLING CODE 6717–01–P

DEPARTMENT OF ENERGY

Federal Energy Regulatory Commission

[Docket No. RP05–91–000]

Southern Star Central Gas Pipeline, Inc.; Notice of Filing of Refund

December 2, 2004.

Take notice that on November 24, Southern Star Central Gas Pipeline, Inc. (Southern Star) tendered for filing, pursuant to Article 9.7(d) of the General Terms and Conditions (GT&C) of its FERC Gas Tariff, its report of net cash-out activity.

Southern Star states that copies of the filing were served on all jurisdictional customers and interested state commissions.

Any person desiring to intervene or to protest this filing must file in accordance with Rules 211 and 214 of the Commission's Rules of Practice and Procedure (18 CFR 385.211 and 385.214). Protests will be considered by the Commission in determining the appropriate action to be taken, but will not serve to make protestants parties to the proceeding. Any person wishing to become a party must file a notice of

intervention or motion to intervene, as appropriate. Such notices, motions, or protests must be filed on or before the date as indicated below. Anyone filing an intervention or protest must serve a copy of that document on the Applicant. Anyone filing an intervention or protest on or before the intervention or protest date need not serve motions to intervene or protests on persons other than the Applicant.

The Commission encourages electronic submission of protests and interventions in lieu of paper using the ''eFiling'' link at *http://www.ferc.gov*. Persons unable to file electronically should submit an original and 14 copies of the protest or intervention to the Federal Energy Regulatory Commission, 888 First Street, NE., Washington, DC 20426.

This filing is accessible on-line at *http://www.ferc.gov*, using the ''eLibrary'' link and is available for review in the Commission's Public Reference Room in Washington, DC. There is an ''eSubscription'' link on the Web site that enables subscribers to receive e-mail notification when a document is added to a subscribed docket(s). For assistance with any FERC Online service, please e-mail *FERCOnlineSupport@ferc.gov*, or call (866) 208–3676 (toll free). For TTY, call (202) 502–8659.

Intervention and Protest Date: 5 p.m. Eastern Time on December 8, 2004.

Magalie R. Salas,

Secretary.

[FR Doc. E4–3547 Filed 12–7–04; 8:45 am]

BILLING CODE 6717–01–P

DEPARTMENT OF ENERGY

Federal Energy Regulatory Commission

[Docket No. RP95–136–021]

Southern Star Central Gas Pipeline, Inc.; Notice of Filing of Refund Report

December 2, 2004.

Take notice that on November 23, 2004, Southern Star Central Gas Pipeline, Inc. (Southern Star) tendered for filing its interruptible excess refund report for the twelve-month period ended September 2004.

Southern Star states that copies of the filing were served on all parties on the Commission's official service list in this proceeding.

Any person desiring to protest this filing must file in accordance with Rule 211 of the Commission's Rules of Practice and Procedure (18 CFR 385.211). Protests to this filing will be considered by the Commission in determining the appropriate action to be taken, but will not serve to make protestants parties to the proceeding. Such protests must be filed on or before the date as indicated below. Anyone filing a protest must serve a copy of that document on all the parties to the proceeding.

The Commission encourages electronic submission of protests in lieu of paper using the ''eFiling'' link at *http://www.ferc.gov.* Persons unable to file electronically should submit an original and 14 copies of the protest to the Federal Energy Regulatory Commission, 888 First Street, NE., Washington, DC 20426.

This filing is accessible on-line at *http://www.ferc.gov,* using the ''eLibrary'' link and is available for review in the Commission's Public Reference Room in Washington, DC. There is an ''eSubscription'' link on the Web site that enables subscribers to receive e-mail notification when a document is added to a subscribed docket(s). For assistance with any FERC Online service, please e-mail *FERCOnlineSupport@ferc.gov,* or call (866) 208–3676 (toll free). For TTY, call (202) 502–8659.

Protest Date: 5 p.m. Eastern Time on December 8, 2004.

Magalie R. Salas,

Secretary.

[FR Doc. E4–3555 Filed 12–7–04; 8:45 am]

BILLING CODE 6717–01–P

DEPARTMENT OF ENERGY

Federal Energy Regulatory Commission

[Docket No. RP05–95–000]

Tennessee Gas Pipeline Company; Notice of Cashout Report

December 2, 2004.

Take notice that on November 30, 2004, Tennessee Gas Pipeline Company (Tennessee) tendered for filing as part of its FERC Gas Tariff, Fifth Revised Volume No. 1, its cashout report for the September 2003 through August 2004.

Any person desiring to intervene or to protest this filing must file in accordance with Rules 211 and 214 of the Commission's Rules of Practice and Procedure (18 CFR 385.211 and 385.214). Protests will be considered by the Commission in determining the appropriate action to be taken, but will not serve to make protestants parties to the proceeding. Any person wishing to become a party must file a notice of intervention or motion to intervene, as appropriate. Such notices, motions, or protests must be filed in accordance with the provisions of Section 154.210 of the Commission's regulations (18 CFR 154.210). Anyone filing an intervention or protest must serve a copy of that document on the Applicant. Anyone filing an intervention or protest on or before the intervention or protest date need not serve motions to intervene or protests on persons other than the Applicant.

The Commission encourages electronic submission of protests and interventions in lieu of paper using the ''eFiling'' link at *http://www.ferc.gov.* Persons unable to file electronically should submit an original and 14 copies of the protest or intervention to the Federal Energy Regulatory Commission, 888 First Street, NE., Washington, DC 20426.

This filing is accessible on-line at *http://www.ferc.gov,* using the ''eLibrary'' link and is available for review in the Commission's Public Reference Room in Washington, DC. There is an ''eSubscription'' link on the Web site that enables subscribers to receive e-mail notification when a document is added to a subscribed docket(s). For assistance with any FERC Online service, please e-mail *FERCOnlineSupport@ferc.gov,* or call (866) 208–3676 (toll free). For TTY, call (202) 502–8659.

Magalie R. Salas,

Secretary.

[FR Doc. E4–3551 Filed 12–7–04; 8:45 am]

BILLING CODE 6717–01–P

DEPARTMENT OF ENERGY

Federal Energy Regulatory Commission

[Docket No. RP05–89–000]

Viking Gas Transmission Company; Notice of Proposed Changes in FERC Gas Tariff

December 2, 2004.

Take notice that on November 24, 2004, Viking Gas Transmission Company (Viking) tendered for filing to become part of its FERC Gas Tariff, First Revised Volume No. 1, the following tariff sheets to become effective December 24, 2004:

Sixth Revised Sheet No. 62
Fifth Revised Sheet No. 7
Third Revised Sheet No. 31
Fifth Revised Sheet No. 67
Nineteenth Revised Sheet No. 39
Fourth Revised Sheet No. 68
Eleventh Revised Sheet No. 40
First Revised Sheet No. 68.01
Second Revised Sheet No. 41B

Twelfth Revised Sheet No. 69
Ninth Revised Sheet No. 55
Sixth Revised Sheet No. 55A
Ninth Revised Sheet No. 77
Tenth Revised Sheet No. 56
Tenth Revised Sheet No. 85
Fourth Revised Sheet No. 97

Viking states that the purpose of this filing is to make minor tariff housekeeping changes and to update its tariff language in accordance with the implementation of Order No. 2004.

Any person desiring to intervene or to protest this filing must file in accordance with Rules 211 and 214 of the Commission's Rules of Practice and Procedure (18 CFR 385.211 and 385.214). Protests will be considered by the Commission in determining the appropriate action to be taken, but will not serve to make protestants parties to the proceeding. Any person wishing to become a party must file a notice of intervention or motion to intervene, as appropriate. Such notices, motions, or protests must be filed in accordance with the provisions of Section 154.210 of the Commission's regulations (18 CFR 154.210). Anyone filing an intervention or protest must serve a copy of that document on the Applicant. Anyone filing an intervention or protest on or before the intervention or protest date need not serve motions to intervene or protests on persons other than the Applicant.

The Commission encourages electronic submission of protests and interventions in lieu of paper using the ''eFiling'' link at *http://www.ferc.gov*. Persons unable to file electronically should submit an original and 14 copies of the protest or intervention to the Federal Energy Regulatory Commission, 888 First Street, NE., Washington, DC 20426.

This filing is accessible on-line at *http://www.ferc.gov*, using the ''eLibrary'' link and is available for review in the Commission's Public Reference Room in Washington, DC. There is an ''eSubscription'' link on the Web site that enables subscribers to receive e-mail notification when a document is added to a subscribed docket(s). For assistance with any FERC Online service, please e-mail *FERCOnlineSupport@ferc.gov*, or call (866) 208–3676 (toll free). For TTY, call (202) 502–8659.

Magalie R. Salas,

Secretary.

[FR Doc. E4–3545 Filed 12–7–04; 8:45 am]

BILLING CODE 6717–01–P

DEPARTMENT OF ENERGY

Federal Energy Regulatory Commission

[Docket No. RP03–323–005]

Williston Basin Interstate Pipeline Company; Notice of Negotiated Rate

December 2, 2004.

Take notice that on November 23, 2004, Williston Basin Interstate Pipeline Company (Williston Basin) tendered for filing with the Commission the following revised negotiated Rate Schedule FT–1 service agreement:

Prairielands Energy Marketing, Inc. FT–419.

The proposed effective date of the service agreement is November 1, 2004. Williston Basin states that copies of the filing are being served upon those listed on the service list.

Any person desiring to intervene or to protest this filing must file in accordance with Rules 211 and 214 of the Commission's Rules of Practice and Procedure (18 CFR 385.211 and 385.214). Protests will be considered by the Commission in determining the appropriate action to be taken, but will not serve to make protestants parties to the proceeding. Any person wishing to become a party must file a notice of intervention or motion to intervene, as appropriate. Such notices, motions, or protests must be filed in accordance with the provisions of Section 154.210 of the Commission's regulations (18 CFR 154.210). Anyone filing an intervention or protest must serve a copy of that document on the Applicant. Anyone filing an intervention or protest on or before the intervention or protest date need not serve motions to intervene or protests on persons other than the Applicant.

The Commission encourages electronic submission of protests and interventions in lieu of paper using the ''eFiling'' link at *http://www.ferc.gov.* Persons unable to file electronically should submit an original and 14 copies of the protest or intervention to the Federal Energy Regulatory Commission, 888 First Street, NE., Washington, DC 20426.

This filing is accessible on-line at *http://www.ferc.gov,* using the ''eLibrary'' link and is available for review in the Commission's Public Reference Room in Washington, DC. There is an ''eSubscription'' link on the Web site that enables subscribers to receive e-mail notification when a document is added to a subscribed docket(s). For assistance with any FERC Online service, please e-mail *FERCOnlineSupport@ferc.gov,* or call (866) 208–3676 (toll free). For TTY, call (202) 502–8659.

Magalie R. Salas,

Secretary.

[FR Doc. E4–3541 Filed 12–7–04; 8:45 am]

BILLING CODE 6717–01–P

DEPARTMENT OF ENERGY

Federal Energy Regulatory Commission

[Docket No. EC05–22–000, et al.]

Mirant Oregon, LLC, et al.; Electric Rate and Corporate Filings

December 1, 2004.

The following filings have been made with the Commission. The filings are listed in ascending order within each docket classification.

1. Mirant Oregon, LLC, Avista Corporation

[Docket Nos. EC05–22–000, ER99–1435–001, ER02–1331–005]

Take notice that on November 23, 2004, Mirant Oregon, LLC (Mirant Oregon) and Avista Corporation d/b/a Avista Utilities (Avista Utilities) (together, Applicants) filed with the Federal Energy Regulatory Commission, pursuant to section 203 of the Federal Power Act, a Joint Application for Authorization to Transfer Jurisdictional Facilities, Request for Expedited Treatment and Notice of Change in Status with respect to the disposition of jurisdictional assets relating to the transfer to Avista Utilities of Mirant Oregon's 50 percent ownership interest in Coyote Springs 2. Applicants request confidential treatment for the Asset Purchase and Sale Agreement by and between Mirant Oregon, LLC and Avista Corporation, dated October 13, 2004, which is attached as Exhibit I to the Application.

Comment Date: 5 p.m. Eastern Time on December 17, 2004.

2. United States Department of Energy

[Docket No. EF05–5071–000]

Take notice that on November 24, 2004, the Deputy Secretary of the Department of Energy, by Rate Order No. WAPA–116, did confirm and approve on an interim basis, to be effective on April 1, 2005, the Western Area Power Administration's power rate formula contained in Contract No. 94–SLC–0254 and Contract No. 94–SLC–0253.

The rate formula will be in effect on and interim basis pending the Commission's approval of it or a

substitute rate on a final basis ending March 31, 2010.

Comment Date: 5 p.m. Eastern Time on December 15, 2004.

3. San Diego Gas & Electric Company v. Sellers of Energy and Ancillary Services Into Markets Operated by the California Independent System Operator Corporation and the California Power Exchange; Investigation of Practices of the California Independent System Operator and the California Power Exchange

[Docket Nos. EL00–95–119, EL00–98–106]

Take notice that on November 24, 2004, the California Independent System Operator Corporation (ISO) submitted a filing in compliance with the order issued in the captioned dockets on October 27, 2004, 109 FERC ¶ 61,078.

The ISO states that this filing has been served upon all parties on the official service lists for the captioned dockets. In addition, the ISO has posted this filing on the ISO Home Page.

Comment Date: 5 p.m. Eastern Time on December 15, 2004.

4. City of Azusa, California

[Docket No. EL05–32–000]

Take notice that on November 29, 2004, the City of Azusa, California (Azusa) submitted for filing changes to its Transmission Revenue Balancing Account Adjustment and to Appendix I of its transmission owner tariff. Azusa requests a January 1, 2005 effective date for its filing. Azusa further requests that the Commission waive any fees for the filing of its revisions.

Comment Date: 5 p.m. Eastern Time on December 20, 2004.

5. Duke Power, a Division of Duke Energy Corporation

[Docket No. ER96–110–012]

Take notice that, on November 24, 2004, Duke Power, a division of Duke Energy Corporation, submitted a supplemental response to the Commission's deficiency letter issued October 29, 2004 in Docket Nos. ER96–110–010 and ER96–110–011.

Duke Power states that copies of the filing were served on parties on the official service list in the above-captioned proceeding.

Comment Date: 5 p.m. Eastern Time on December 15, 2004.

6. California Independent System Operator Corporation

[Docket No. ER03–407–005]

Take notice that on November 24, 2004, the California Independent System Operator Corporation (ISO) submitted a filing in compliance with the Commission's order issued October 29, 2004, in Docket No. ER03–407–004, 109 FERC ¶ 61,098.

The ISO states that this filing has been served upon all parties on the official service list for the captioned docket. In addition, the ISO states that it has posted this filing on the ISO Home Page.

Comment Date: 5 p.m. Eastern Time on December 15, 2004.

7. Entergy Services, Inc.

[Docket No. ER03–753–003]

Take notice that on November 24, 2004, Entergy Services, Inc. (Entergy) submitted a revised version of Service Schedule MSS–4 of the Entergy System Agreement. Entergy states that the changes proposed to MSS–4 are designed solely to conform the terms of MSS–4 to the terms of the MSS–4 underlying the Presiding Judge's October 6, 2004 certification of the MSS–4 settlement among Entergy and the other settling parties in this proceeding.

Entergy states that a copy of this filing is being served on all parties on the official service lists in Docket No. ER03–753 and Docket Nos. ER03–583, *et al.*

Comment Date: 5 p.m. Eastern Time on December 15, 2004.

8. Xcel Energy Operating Companies

[Docket No. ER04–419–006]

Take notice that on November 26, 2004, Xcel Energy Services Inc. (XES) filed, on behalf of the Xcel Energy Operating Companies, proposed compliance revisions to the Xcel Energy Operating Companies Joint Open Access Transmission Tariff (Joint OATT) in compliance with Commission's Order on Rehearings issued October 26, 2004 in Docket No. ER04–419–001 *et al., Xcel Energy Operating Companies,* 109 FERC ¶ 61,072 (2004). XES states that the compliance tariff sheets are proposed to be effective April 26, 2004, pursuant to the October 26 Order.

Comment Date: 5 p.m. Eastern Time on December 17, 2004.

9. Midwest Independent Transmission System Operator, Inc., Midwest Independent Transmission System Operator, Inc., PJM Interconnection, L.L.C., et al.; Midwest Independent Transmission System Operator, Inc., PJM Interconnection, L.L.C., et al.; Ameren Services Company, et al.

[Docket Nos. ER05–6–001, EL04–135–003, EL02–111–020, EL03–212–017]

Take notice that, on November 24, 2004, PJM Interconnection L.L.C. (PJM) and the PJM Transmission Owners, acting through the PJM and PJM West Transmission Owners Agreement Administrative Committees, submitted a compliance filing pursuant to the Commission's Order On Transmission Rate Proposals, issued on November 18, 2004, in Docket Nos. ER05–6–000, *et al.*, 109 FERC ¶ 61,168 (2004). PJM states that the compliance filing contains revisions to the PJM Open Access Transmission Tariff. PJM requests an effective date of December 1, 2004.

PJM states that copies of this filing were served upon all PJM members and utility regulatory commissions in the PJM Region and on parties on the official service list in the above-captioned proceeding.

Comment Date: 5 p.m. Eastern Time on December 15, 2004.

10. Midwest Independent Transmission System Operator, Inc.; Midwest Independent Transmission System Operator, Inc., PJM Interconnection, L.L.C., et al.; Midwest Independent Transmission System Operator, Inc., PJM Interconnection, L.L.C., et al.; Ameren Services Company, et al.

[Docket Nos. ER05–6–002, EL04–135–004, EL02–111–021, EL03–212–018]

Take notice that, on November 24, 2004, American Electric Power Service Corporation (AEP) submitted a ''Compliance Filing in the Alternative'' in response to the Commission's Order On Transmission Rate Proposals issued November 18, 2004 in Docket Nos. ER05–6–000, EL04–135–000, EL02–111–010 and EL03–212–018. AEP requests an effective date of December 1, 2004.

AEP states that a copy of this filing has been served on the official service list.

Comment Date: 5 p.m. Eastern Time on December 15, 2004.

11. Midwest Independent Transmission System Operator, Inc., Midwest Independent Transmission System Operator, Inc., Midwest Independent Transmission System Operator, Inc., Ameren Services Co., et al.

[Docket Nos. ER05–6–003, EL04–135–005, EL02–111–022, EL03–212–019]

Take notice that on November 24, 2004, the Midwest Independent Transmission System Operator, Inc. (Midwest ISO) and Midwest ISO Transmission Owners (collectively, Applicants) jointly submitted for filing a compliance filing pursuant to the Commission's order issued November 18, 2004 in Docket Nos. ER05–6, EL04–135, EL02–111, and EL03–212, *Midwest Independent Transmission Sys. Operator, Inc.,* 109 FERC ¶ 61,168 (2004).

Applicants state that copies of the filing were served on parties on the official service list.

Comment Date: 5 p.m. Eastern Time on December 15, 2004.

12. Diablo Winds, LLC

[Docket No. ER05–222–001]

Take notice that on November 29, 2004, Diablo Winds, LLC (Applicant) submitted a Supplement to the Application for Market Based Rate Authority filed on November 16, 2004. Applicant states that it owns and will operate a wind-powered electric generation facility with a nameplate capacity of up to 18 MW (the Facility).

Applicant states that a copy of the filing was served upon the Florida Public Service Commission.

Comment Date: 5 p.m. Eastern Time on December 9, 2004.

13. Gilroy Energy Center, LLC

[Docket No. ER05–248–000]

Take notice that on November 23, 2004, Gilroy Energy Center, LLC (Gilroy) submitted revised rate schedule sheets to Gilroy First Revised Rate Schedule FERC No. 2, consisting of a Must-Run Service Agreement and accompanying schedules.

Gilroy states that copies of the filing were served upon the California Independent System Operator Corporation, the California Public Utilities Commission, the California Electricity Oversight Board and Pacific Gas and Electric Company.

Comment Date: 5 p.m. Eastern Time on December 14, 2004.

14. Goose Haven Energy Center, LLC

[Docket No. ER05–250–000]

Take notice that on November 23, 2004, Goose Haven Energy Center, LLC (Goose Haven) submitted revised rate schedule sheets to Goose Haven Rate Schedule FERC No. 2, consisting of a Reliability Must-Run Service Agreement and accompanying schedules.

Goose Haven states that copies of the filing were served upon the California Independent System Operator Corporation, the California Public Utilities Commission, the California Electricity Oversight Board and Pacific Gas and Electric Company.

Comment Date: 5 p.m. Eastern Time on December 14, 2004.

15. Los Esteros Critical Energy Facility, LLC

[Docket No. ER05–251–000]

Take notice that on November 23, 2004, Los Esteros Critical Energy Facility, LLC (LECEF) submitted revised rate schedule sheets to Los Esteros Critical Energy Facility Rate Schedule FERC No. 2, consisting of a Reliability Must-Run Service Agreement and accompanying schedules.

LECEF states that copies of the filing were served upon the California Independent System Operator Corporation, the California Public Utilities Commission, the California Electricity Oversight Board and Pacific Gas and Electric Company.

Comment Date: 5 p.m. Eastern Time on December 14, 2004.

16. Creed Energy Center, LLC

[Docket No. ER05–252–000]

Take notice that on November 23, 2004, Creed Energy Center, LLC (Creed) submitted revised rate schedule sheets to Creed Energy Center Rate Schedule FERC No. 2, consisting of a Reliability Must-Run Service Agreement and accompanying schedules.

Creed states that copies of the filing were served upon the California Independent System Operator Corporation, the California Public Utilities Commission, the California Electricity Oversight Board and Pacific Gas and Electric Company.

Comment Date: 5 p.m. Eastern Time on December 14, 2004.

17. Geysers Power Company, LLC

[Docket No. ER05–253–000]

Take notice that on November 23, 2004, Geysers Power Company, LLC (Geysers Power) submitted revised rate schedule sheets to Geysers Power Company First Revised Rate Schedule FERC No. 4 and Geysers Power Company Rate Schedule FERC No. 5, consisting of Reliability Must-Run Service Agreements and accompanying schedules.

Geysers Power states that copies of the filing were served upon the California Independent System Operator Corporation, the California Public Utilities Commission, the California Electricity Oversight Board and Pacific Gas and Electric Company.

Comment Date: 5 p.m. Eastern Time on December 14, 2004.

18. South Carolina Electric & Gas Company

[Docket No. ER05–254–000]

Take notice that on November 23, 2004, South Carolina Electric & Gas Company (SCE&G), submitted to the Commission a Notice of Cancellation for Rate Schedule No. T1.S1.9, under SCE&G's FERC Electric Tariff, Third Revised Volume No. 1, with Central Electric Power Cooperative (Central). SCE&G requests an effective date of November 1, 2004.

SCE&G states that a Notice of the proposed cancellation has been served on Central and the South Carolina Public Service Commission.

Comment Date: 5 p.m. Eastern Time on December 14, 2004.

19. El Paso Electric Company

[Docket No. ER05–255–000]

Take notice that, on November 19, 2004, El Paso Electric Company (EPE) tendered for filing Notices of Cancellation for the FERC Rate Schedules No. 25, 28, 29, 30, 31, 33, 37, 43, 44, 47, 51, 52, 54, 55, 64, 67, 68, 69, 70, 71, 77, 81, 100, 101, 102, and 103. EPE states that these rate schedules are associated with agreements originally executed between EPE and Arizona Public Service Company, Public Service Company of New Mexico, Salt River Project Agricultural Improvement and Power District, Southern California Edison, and Tucson Gas & Electric Company; the Department of Water and Power of the City of Pasadena; the City of Glendale; the City of Burbank; the Company and Department of Water and Power of the City of Los Angeles; Arizona Electric Power Cooperative; San Diego Gas & Electric Company; the City of Farmington; the City of Riverside; M–S–R Public Power Agency; the City of Anaheim; Imperial Irrigation District; the State of California Department of Water Resources; Alamito Company; Citizens Utilities Company; the City of Azusa; the City of Banning; the City of Colton; the City of Vernon; Idaho Power Company; and Utah Associated Municipal Power Systems, respectively. EPE requests an effective date of January 31, 2005.

EPE states that copies of this filing were served upon the co-parties to the above-listed rate schedules.

Comment Date: 5 p.m. Eastern Time on December 14, 2004.

20. Virginia Electric and Power Company

[Docket No. ER05–256–000]

Take notice that on November 23, 2004, Virginia Electric and Power Company, (Virginia Power) doing business as Dominion Virginia Power, tendered for filing a revised Generator Interconnection and Operating Agreement (Revised Interconnection Agreement) between Dominion Virginia Power and CPV Cunningham Creek LLC (CPV). By this filing Virginia Power seeks to modify certain provisions and the milestone dates in Appendices F and G in connection with a settlement agreement reached between Dominion Virginia Power and CPV. Dominion Virginia Power requests an effective date January 22, 2005.

Dominion Virginia Power states that copies of the filing were served upon CPV and the Virginia State Corporation Commission.

Comment Date: 5 p.m. Eastern Time on December 14, 2004.

21. Central Maine Power Company

[Docket No. ER05–257–000]

Please take notice that on November 24, 2004, Central Maine Power Company (CMP) submitted an Executed Continuing Site/Interconnection Agreements (CSIA) between CMP and Messalonskee Stream Hydro, LLC, which replaces an unexecuted CSIA filed with and accepted by the Commission in Docket No. ER04–425–000. CMP states that this executed CSIA, which is intended to replace the unexecuted CSIA without changing any terms and conditions, is designated as FERC Electric Tariff, Fifth Revised, Vol. No. 3, First Revised Service Agreement No. 201. CMP requests an effective date of December 23, 2003.

CMP states that copies of this filing have been served on the parties.

Comment Date: 5 p.m. Eastern Time on December 15, 2004.

22. Central Maine Power Company

[Docket No. ER05–258–000]

Please take notice that on November 24, 2004, Central Maine Power Company (CMP) submitted an Executed Continuing Site/Interconnection Agreement (CSIA) between CMP and Ledgemere Hydro, LLC, seeking to replace an unexecuted CSIA filed with and accepted by the Commission in Docket No. ER04–425–000. CMP states that this executed CSIA, which is intended to replace the unexecuted CSIA without changing any terms and conditions, is designated as FERC Electric Tariff, Fifth Revised, Vol. No. 3, First Revised Service Agreement No. 202. CMP requests an effective date of December 23, 2003.

CMP states that copies of this filing have been served on the parties.

Comment Date: 5 p.m. Eastern Time on December 15, 2004.

23. Central Maine Power Company

[Docket No. ER05–259–000]

Take notice that on November 24, 2004, Central Maine Power Company (CMP) submitted an Executed Continuing Site/Interconnection Agreements (CSIA) between CMP and Kezar Falls Hydro, LLC, seeking to replace an unexecuted CSIA filed with and accepted by the Commission in Docket No. ER04–425–000. CMP states that this executed CSIA, which is intended to replace the unexecuted CSIA without changing any terms and conditions, is designated as FERC Electric Tariff, date of December 23, 2003.

CMP states that copies of this filing have been served on the parties.

Comment Date: 5 p.m. Eastern Time on December 15, 2004.

24. Midwest Independent Transmission System Operator, Inc.

[Docket No. ER05–260–000]

Take notice that on November 23, 2004, the Midwest Independent Transmission System Operator, Inc. (Midwest ISO), the Midwest ISO Transmission Owners, and the Midwest Stand Alone Transmission Companies (collectively, Filing Parties) submitted for filing proposed revisions to the Agreement of Transmission Facilities Owners to Organize the Midwest Independent Transmission System Operator, Inc., a Delaware Non-Stock Corporation to accommodate Great River Energy becoming a new transmission owner member of the Midwest ISO. The Midwest ISO requests an effective date of December 1, 2004.

The Midwest ISO states that the Filing Parties have also requested waiver of the service requirements set forth in 18 CFR 385.2010. The Midwest ISO states that it has electronically served a copy of this filing, with attachments, upon all Midwest ISO Members, Member representatives of Transmission Owners and Non-Transmission Owners, as well as all state commissions within the region. In addition, the Midwest ISO states that the filing has been electronically posted on the Midwest ISO's Web site at *http://www.midwestiso.org* under the heading Filings to FERC for other interested parties in this matter. The Midwest ISO indicates that it will provide hard copies to any interested parties upon request.

Comment Date: 5 p.m. Eastern Time on December 14, 2004.

25. Constellation Energy Commodities Group, Inc.

[Docket No. ER05–261–000]

Take notice that on November 24, 2004 Constellation Energy Commodities Group, Inc. (Constellation) submitted a Notice of Succession pursuant to section 205 of the Federal Power Act and sections 35.16 and 131.51 of the Commission's regulations. Constellation states that as a result of a name change, Constellation is succeeding to the FERC Electric Rate Schedule Nos. 11 and 12 of Constellation Power Source, Inc. Constellation requests an effective date of November 1, 2004.

Comment Date: 5 p.m. Eastern Time on December 15, 2004.

26. American Transmission Company LLC

[Docket No. ER04–262–000]

Take notice that on November 24, 2004, American Transmission Company LLC (ATCLLC) tendered for filing a Distribution-Transmission Interconnection Agreement between ATCLLC and Prairie du Sac Utilities. ATCLLC requests an effective date of November 1, 2004.

Comment Date: 5 p.m. Eastern Time on December 15, 2004.

27. Brownsville Power I, L.L.C., Caledonia Power I, L.L.C., Cinergy Capital & Trading, Inc.

[Docket Nos. ER05–263–000, ER05–264–000, ER05–265–000]

Take notice that on November 24, 2004, Brownsville Power I, L.L.C., Caledonia Power I, L.L.C., (Brownsville) and Cinergy Capital & Trading, Inc. (together, Applicants) submitted amendments to their respective market-based rate tariffs to substitute a new index price cap for sales between affiliates and to conform the tariffs to industry standards for sales of products in RTO markets.

Applicants state that copies of the filing were served upon Applicants' customers under their respective market-based rate tariffs.

Comment Date: 5 p.m. Eastern Time on December 15, 2004.

28. Southern California Edison Company

[Docket No. ER05–266–000]

Take notice that on November 26, 2004, Southern California Edison Company (SCE) submitted revised rate sheets to the Amended and Restated Ormond Beach Generating Station Radial Lines Agreement between SCE and Reliant Energy Ormond Beach, L.L.C. (Reliant). SCE states that the purpose of this filing is to reflect that Reliant will pay to SCE the estimated cost of replacement of certain equipment. SCE requests an effective date of November 12, 2004.

SCE states that copies of the filing were served upon the Public Utilities Commission of the State of California and Reliant Energy Ormond Beach, L.L.C.

Comment Date: 5 p.m. Eastern Time on December 17, 2004.

Standard Paragraph

Any person desiring to intervene or to protest this filing must file in accordance with Rules 211 and 214 of the Commission's Rules of Practice and

Procedure (18 CFR 385.211 and 385.214). Protests will be considered by the Commission in determining the appropriate action to be taken, but will not serve to make protestants parties to the proceeding. Any person wishing to become a party must file a notice of intervention or motion to intervene, as appropriate. Such notices, motions, or protests must be filed on or before the comment date. Anyone filing a motion to intervene or protest must serve a copy of that document on the Applicant and all parties to this proceeding.

The Commission encourages electronic submission of protests and interventions in lieu of paper using the ''eFiling'' link at *http://www.ferc.gov.* Persons unable to file electronically should submit an original and 14 copies of the protest or intervention to the Federal Energy Regulatory Commission, 888 First Street, NE., Washington, DC 20426.

This filing is accessible on-line at *http://www.ferc.gov,* using the ''eLibrary'' link and is available for review in the Commission's Public Reference Room in Washington, DC. There is an ''eSubscription'' link on the Web site that enables subscribers to receive e-mail notification when a document is added to a subscribed docket(s). For assistance with any FERC Online service, please e-mail *FERCOnlineSupport@ferc.gov,* or call (866) 208–3676 (toll free). For TTY, call (202) 502–8659.

Magalie R. Salas,

Secretary.

[FR Doc. E4–3531 Filed 12–7–04; 8:45 am]

BILLING CODE 6717–01–P

DEPARTMENT OF ENERGY

Federal Energy Regulatory Commission

[Docket No. ER96–719–004, et al.]

MidAmerican Energy Company, et al.; Electric Rate and Corporate Filings

November 30, 2004.

The following filings have been made with the Commission. The filings are listed in ascending order within each docket classification.

1. MidAmerican Energy Company

[Docket No. ER96–719–004]

On November 23, 2004, MidAmerican Energy Company (MidAmerican) submitted a supplemental filing seeking to provide additional information relating to the compliance filing that MidAmerican previously submitted on October 29, 2004, pursuant to the Commission's Order on Market-Based Rate Authority, 108 FERC ¶ 61,043 (2004).

Comment Date: 5 p.m. Eastern Time on December 14, 2004.

2. La Paloma Generating Company LLC

[Docket No. ER00–107–002]

Take notice that on November 23, 2004, La Paloma Generating Company LLC (La Paloma Gen) filed with the Commission a notice of change in status in connection with the transfer of the ownership interests that were held indirectly by National Energy & Gas Transmission, Inc. in La Paloma Gen, which owns an approximately 1,040 MW combined cycle generating facility located near the town of McKittrick, California, to the creditors of La Paloma Gen.

Comment Date: 5 p.m. Eastern Time on December 14, 2004.

3. Delta Energy Center, LLC

[Docket No. ER03–510–003]

Take notice that on November 23, 2004, Delta Energy Center, LLC (Delta) submitted revised rate schedule sheets to Delta Rate Schedule FERC No. 2, consisting of a Reliability Must-Run Service Agreement and accompanying schedules.

Delta states that copies of the filing were served upon the California Independent System Operator Corporation, the California Public Utilities Commission, the California Electricity Oversight Board and Pacific Gas and Electric Company.

Comment Date: 5 p.m. Eastern Time on December 14, 2004.

4. American Electric Power

[Docket No. ER04–1049–001]

Take notice that on November 23, 2004, American Electric Power (AEP) submitted a compliance filing regarding the time value of refunds that AEP must make for any billing that may have occurred prior to the effective dates of the agreements referenced in the Commission's letter order issued on September 23, 2004, in docket number ER04–1049–000.

Comment Date: 5 p.m. Eastern Time on December 14, 2004.

Standard Paragraph

Any person desiring to intervene or to protest this filing must file in accordance with Rules 211 and 214 of the Commission's Rules of Practice and Procedure (18 CFR 385.211 and 385.214). Protests will be considered by the Commission in determining the appropriate action to be taken, but will not serve to make protestants parties to the proceeding. Any person wishing to become a party must file a notice of intervention or motion to intervene, as appropriate. Such notices, motions, or protests must be filed on or before the comment date. Anyone filing a motion to intervene or protest must serve a copy of that document on the Applicant and all parties to this proceeding.

The Commission encourages electronic submission of protests and interventions in lieu of paper using the ''eFiling'' link at *http://www.ferc.gov.* Persons unable to file electronically should submit an original and 14 copies of the protest or intervention to the Federal Energy Regulatory Commission, 888 First Street, NE., Washington, DC 20426.

This filing is accessible on-line at *http://www.ferc.gov,* using the ''eLibrary'' link and is available for review in the Commission's Public Reference Room in Washington, DC. There is an ''eSubscription'' link on the Web site that enables subscribers to receive e-mail notification when a document is added to a subscribed docket(s). For assistance with any FERC Online service, please e-mail *FERCOnlineSupport@ferc.gov,* or call (866) 208–3676 (toll free). For TTY, call (202) 502–8659.

Magalie R. Salas,

Secretary.

[FR Doc. E4–3557 Filed 12–7–04; 8:45 am]

BILLING CODE 6717–01–P

DEPARTMENT OF ENERGY

Federal Energy Regulatory Commission

[Docket No. ER96–719–004, et al.]

MidAmerican Energy Company, et al.; Electric Rate and Corporate Filings

November 30, 2004.

The following filings have been made with the Commission. The filings are listed in ascending order within each docket classification.

1. MidAmerican Energy Company

[Docket No. ER96–719–004]

On November 23, 2004, MidAmerican Energy Company (MidAmerican) submitted a supplemental filing seeking to provide additional information relating to the compliance filing that MidAmerican previously submitted on October 29, 2004, pursuant to the Commission's Order on Market-Based Rate Authority, 108 FERC ¶ 61,043 (2004).

Comment Date: 5 p.m. eastern time on December 14, 2004.

2. La Paloma Generating Company LLC

[Docket No. ER00–107–002]

Take notice that on November 23, 2004, La Paloma Generating Company LLC (La Paloma Gen) filed with the Commission a notice of change in status in connection with the transfer of the ownership interests that were held indirectly by National Energy & Gas Transmission, Inc. in La Paloma Gen, which owns an approximately 1,040 MW combined cycle generating facility located near the town of McKittrick, California, to the creditors of La Paloma Gen.

Comment Date: 5 p.m. eastern time on December 14, 2004.

3. Delta Energy Center, LLC

[Docket No. ER03–510–003]

Take notice that on November 23, 2004, Delta Energy Center, LLC (Delta) submitted revised rate schedule sheets to Delta Rate Schedule FERC No. 2, consisting of a Reliability Must-Run Service Agreement and accompanying schedules.

Delta states that copies of the filing were served upon the California Independent System Operator Corporation, the California Public Utilities Commission, the California Electricity Oversight Board and Pacific Gas and Electric Company.

Comment Date: 5 p.m. eastern time on December 14, 2004.

4. American Electric Power

[Docket No. ER04–1049–001]

Take notice that on November 23, 2004, American Electric Power (AEP) submitted a compliance filing regarding the time value of refunds that AEP must make for any billing that may have occurred prior to the effective dates of the agreements referenced in the Commission's letter order issued on September 23, 2004, in docket number ER04–1049–000.

Comment Date: 5 p.m. eastern time on December 14, 2004.

Standard Paragraph

Any person desiring to intervene or to protest this filing must file in accordance with Rules 211 and 214 of the Commission's Rules of Practice and Procedure (18 CFR 385.211 and 385.214). Protests will be considered by the Commission in determining the appropriate action to be taken, but will not serve to make protestants parties to the proceeding. Any person wishing to become a party must file a notice of intervention or motion to intervene, as appropriate. Such notices, motions, or protests must be filed on or before the comment date. Anyone filing a motion to intervene or protest must serve a copy of that document on the Applicant and all parties to this proceeding.

The Commission encourages electronic submission of protests and interventions in lieu of paper using the ''eFiling'' link at *http://www.ferc.gov.* Persons unable to file electronically should submit an original and 14 copies of the protest or intervention to the Federal Energy Regulatory Commission, 888 First Street, NE., Washington, DC 20426.

This filing is accessible on-line at *http://www.ferc.gov,* using the ''eLibrary'' link and is available for review in the Commission's Public Reference Room in Washington, DC. There is an ''eSubscription'' link on the Web site that enables subscribers to receive e-mail notification when a document is added to a subscribed docket(s). For assistance with any FERC Online service, please e-mail *FERCOnlineSupport@ferc.gov,* or call (866) 208–3676 (toll free). For TTY, call (202) 502–8659.

Magalie R. Salas,

Secretary.

[FR Doc. E4–3561 Filed 12–7–04; 8:45 am]

BILLING CODE 6717–01–P

DEPARTMENT OF ENERGY

Federal Energy Regulatory Commission

[Docket No. EF05–4011–000, et al.]

Southwestern Power Administration, et al.; Electric Rate and Corporate Filings

November 23, 2004.

The following filings have been made with the Commission. The filings are listed in ascending order within each docket classification.

1. Southwestern Power Administration

[Docket No. EF05–4011–000]

Take notice that on November 17, 2004, the Deputy Secretary, U.S. Department of Energy, submitted to the Federal Energy Regulatory Commission for confirmation and approval on a final basis, pursuant to the authority vested in the Commission by Delegation Order Nos. 00–037.00, effective December 6, 2001, and 00–001–00A, effective September 17, 2002, the following Southwestern Power Administration (Southwestern) Integrated System rate schedules:

Rate Schedule P–04, Wholesale Rates for Hydro Peaking Power.

Rate Schedule NFTS–04, Wholesale Rates for Non-Federal Transmission/Interconnection Facilities Service.

Rate Schedule EE–04, Wholesale Rate for Excess Energy.

The Integrated System (System) rate schedules were confirmed and approved on an interim basis by the Deputy Secretary in Rate Order No. SWPA–51 for the period January 1, 2005, through September 30, 2008, and have been submitted to the FERC for confirmation and approval on a final basis for the same period. The System rates will increase the annual revenue from $114,973,800 to $123,549,964 primarily to recover increased expenditures in operation and maintenance (O&M) and investment. The total annual revenue increase will be $8,576,164, or 7.5 percent effective January 1, 2005.

In addition, the PRS indicates the need for an annual increase of $737,300 in revenues received through the Purchased Power Adder to recover increased purchased energy costs. Southwestern has continued the rate structure that conforms with the intent of the FERC's Order No. 888; consequently, the actual rate impact on each customer will vary based on the type of service requested and provided. The proposal also includes a continuation of the Administrator's Discretionary Purchased Power Adder Adjustment, to adjust the purchased power adder annually up to $0.0011 per kilowatthour as necessary, under a formula-type rate, with notification to the FERC.

Comment Date: 5 p.m. eastern time on December 8, 2004.

2. Southwestern Power Administration

[Docket No. EF05–4021–000]

Take notice that on November 17, 2004, the Deputy Secretary, U.S. Department of Energy submitted to the Federal Energy Regulatory Commission (FERC) for confirmation and approval on a final basis, pursuant to the authority vested in the FERC by Delegation Order Nos. 00–037.00, effective December 6, 2001, and 00–001.00A, effective September 17, 2002, an annual power rate of $2,513,700 for the sale of power and energy by the Southwestern Power Administration (Southwestern) from the Sam Rayburn Dam Project (Rayburn) to Sam Rayburn Dam Electric Cooperative, Inc. (SRDEC). The rate was confirmed and approved on an interim basis by the Deputy Secretary in Rate Order No. SWPA–52 for the period January 1, 2005, through September 30, 2008, and has been submitted to FERC for confirmation and approval on a final basis for the same period. The annual rate of $2,513,700 is based on the 2004 Revised Power Repayment Study for Rayburn and represents an annual increase in

revenue of $500,676, or 24.9 percent, the lowest possible rate required to meet cost recovery criteria.

This rate supersedes the annual power rate of $2,013,024, which FERC approved on a final basis January 31, 2003, under Docket No. EF02–4021–000 for the period October 1, 2002, through September 30, 2006.

Comment Date: 5 p.m. eastern time on December 8, 2004.

3. NRG Energy, Inc.

[Docket No. EL05–28–000]

Take notice that on November 22, 2004, NRG Energy, Inc. (NRG) filed with the Commission a request for a declaratory order finding that NRG is not a public utility, and is not subject to the requirements of section 204 of the Federal Power Act.

Comment Date: 5 p.m. eastern time on December 6, 2004.

4. Idaho Power Company

[Docket No. ER97–1481–006]

Take notice that on November 16, 2004, Idaho Power Company submitted a compliance filing pursuant to the Commission's November 17, 2003, Order Amending Market-Based Rate Tariffs and Authorizations in Dockets No. EL01–118–000 *et al.*, *Investigation of Terms and Conditions of Public Utility Market-Based Rate Authorizations*, 105 FERC ¶ 61,218 (2003), *order on reh'g,* 107 FERC ¶ 61,175 (2004).

Idaho Power Company states that copies of this filing were served on all parties to this proceeding.

Comment Date: 5 p.m. eastern time on December 7, 2004.

5. Sierra Pacific Power Company, Nevada Power Company

[Docket Nos. ER01–1527–005 and ER01–1529–005]

Take notice that on November 12, 2004, Sierra Pacific Power Company (SPP) and Nevada Power Company (NPC), tendered for filing an amendment to their October 28, 2004 filing of an updated market power analysis.

Comment Date: 5 p.m. eastern time on December 3, 2004

6. PPL Southwest Generation Holdings, LLC

[Docket No. ER01–1870–004]

Take notice that on November 17, 2004, PPL Southwest Generation Holdings, LLC (PPL Southwest Generation) submitted an amendment to its October 25, 2004, filing in Docket No. ER01–1870–003 of a supplement to its updated market power analysis filed on July 12, 2004.

PPL Southwest Generation states that copies of the filing were served on parties on the official service list in the above-captioned proceeding.

Comment Date: 5 p.m. eastern time on December 8, 2004.

7. California Electric Marketing, LLC

[Docket No. ER01–2690–003]

Take notice that on November 17, 2004, California Electric Marketing, LLC, (CalEM) submitted for filing a supplement to its November 1, 2004, filing amending its triennial updated market analysis and submitting revised Rate Schedule FERC No. 1 to incorporate the Market Behavior Rules.

Comment Date: 5 p.m. eastern time on December 8, 2004.

8. Walden Energy, LLC

[Docket No. ER05–66–001]

Take notice that on November 16, 2004, Walden Energy, LLC, (Walden) filed an amendment to its petition filed October 25, 2004, in Docket No. ER05–66–000 for acceptance of Walden Rate Schedule FERC No. 1; the granting of certain blanket approvals, including the authority to sell electricity at market-based rates; and the waiver of certain Commission regulations.

Comment Date: 5 p.m. eastern time on December 7, 2004.

9. Midwest Independent Transmission System Operator, Inc.

[Docket No. ER05–221–000]

Take notice that on November 16, 2004, the Midwest Independent Transmission System Operator, Inc. (Midwest ISO) submitted an Interconnection and Operating Agreement among JJN Wind Farm LLC, Northern States Power Company d/b/a Xcel Energy and the Midwest ISO.

Midwest ISO states that a copy of this filing was served on JJN Wind Farm LLC and Northern States Power Company d/b/a Xcel Energy.

Comment Date: 5 p.m. eastern time on December 7, 2004.

10. Diablo Winds, LLC

[Docket No. ER05–222–000]

Take notice that on November 16, 2004, Diablo Winds, LLC tendered for filing an Application for Market Based Rate Authority. Diablo Winds, LLC states that it owns and will operate a wind-powered electric generation facility with a nameplate capacity of up to 18 MW.

Diablo Winds, LLC states that a copy of the filing was served upon the Florida Public Service Commission.

Comment Date: 5 p.m. eastern time on December 7, 2004.

11. Wisconsin Public Service Corporation

[Docket No. ER05–223–000]

Take notice that on November 16, 2004, Wisconsin Public Service Corporation (WPSC) tendered for filing an executed Generation Maintenance and Power Exchange Transaction Specifications between WPSC and Manitowoc Public Utilities (MPU) designated as Service Agreement No. 63 under WPSC's FERC Electric Tariff, First Revised Volume No. 5. WPSC requests an effective date of November 15, 2004.

WPSC states that copies of the filing were served upon MPU, the Public Service Commission of Wisconsin and the Michigan Public Service Commission.

Comment Date: 5 p.m. eastern time on December 7, 2004.

12. California Independent System Operator Corporation

[Docket No. ER05–224–000]

Take notice that on November 16, 2004, the California Independent System Operator Corporation (California ISO) tendered for filing a ''nonconforming'' Dynamic Scheduling Agreement between the California ISO and Mirant Americas Energy Marketing, LP (Mirant). California ISO requests an effective date of November 17, 2004.

California ISO states that this filing has been served on Mirant, the California Public Utilities Commission, and the California Electricity Oversight Board.

Comment Date: 5 p.m. eastern time on December 7, 2004.

13. PSI Energy, Inc.

[Docket No. ER05–225–000]

Take notice that on November 17, 2004, PSI Energy, Inc. (PSI) tendered for filing an uncontested agreement for a three-step increase in PSI's wholesale electric rates with (1) Indiana Municipal Power Agency, (2) Wabash Valley Power Association, Inc., (3) Indiana Municipal Electric Association, Inc., as agent for and on behalf of the wholesale customers receiving service under PSI's Rate MUN, and (4) Logansport Municipal Utilities of the City of Logansport, Indiana.

PSI states that copies were served on the affected customers and the Indiana Utility Regulatory Commission.

Comment Date: 5 p.m. eastern time on December 7, 2004.

14. American Electric Power Service Corporation

[Docket No. ER05–226–000]

Take notice that on November 17, 2004, American Electric Power Service Corporation (AEPSC) submitted for filing, on behalf of Public Service Company of Oklahoma (PSO), an agreement that provides for PSO to continue its interconnections with Grand River Dam Authority (GRDA), to add certain additional delivery points to the agreement and to delete energy service schedules from that agreement. AEPSC seeks an effective date of December 1, 2004.

AEPSC states that it has served copies of the filing on GRDA.

Comment Date: 5 p.m. eastern time on December 8, 2004.

15. PacifiCorp

[Docket No. ER05–227–000]

Take notice that on November 17, 2004, PacifiCorp tendered for filing Revisions to Appendices A, B and E of the Restated Transmission Service and Operating Agreement, PacifiCorp's First Revised FERC Rate Schedule No. 297, between PacifiCorp and Utah Associated Municipal Power Systems (UAMPS). PacifiCorp requests an effective date of December 1, 2004.

PacifiCorp states that copies of this filing were supplied to the Public Utility Commission of Oregon, the Washington Utilities and Transportation Commission, and UAMPS.

Comment Date: 5 p.m. eastern time on December 8, 2004.

16. Virginia Electric and Power Company

[Docket No. ER05–228–000]

Take notice that on November 17, 2004, Virginia Electric and Power Company (Dominion Virginia Power) tendered for filing a Service Agreement for Network Integration Transmission Service (Retail), and a Network Operating Agreement (Retail) by Dominion Virginia Power to WPS Energy Services, Inc., designated as Service Agreement Number 393, under the Dominion Virginia Power's Open Access Transmission Tariff, FERC Electric Tariff, Second Revised Volume No. 5. Dominion Virginia Power requests an effective date of October 22, 2004.

Comment Date: 5 p.m. eastern time on December 8, 2004.

17. Pacific Gas and Electric Company

[Docket No. ER05–229–000]

Take notice that on November 17, 2004, Pacific Gas and Electric Company (PG&E) submitted the Scheduling Coordinator Services Tariff for the Western Area Power Administration (WAPA). PG&E states that under this Tariff, PG&E seeks to collect from the WAPA the costs PG&E or its designated Scheduling Coordinator incur on behalf of WAPA acting as WAPA's Scheduling Coordinator. PG&E requests an effective date of December 31, 2004.

PG&E states that copies of this filing have been served upon the California Public Utilities Commission, the California Independent System Operator Corporation and the Western Area Power Administration.

Comment Date: 5 p.m. eastern time on December 8, 2004.

18. Ameren Services Company

[Docket No. ER05–230–000]

Take notice that on November 17, 2004, Ameren Services Company (Ameren), as designated agent for Union Electric Company and Central Illinois Public Service Company, filed a Notice of Cancellation of the Interconnection Agreement and Parallel Operating Agreement by and between Kinder Morgan Missouri, LLC and Ameren Services Company. Ameren requests an effective date of November 1, 2004.

Comment Date: 5 p.m. eastern time on December 8, 2004.

19. PSEG Power Connecticut LLC

[Docket No. ER05–231–000]

Take notice that on November 17, 2004, PSEG Power Connecticut LLC (Power Connecticut) submitted for filing Reliability Must Run Agreements (Agreements) between Power Connecticut and ISO New England Inc. (ISO–NE). Connecticut Power states that the Agreements provide the charges associated with the provision of reliability services by Power Connecticut to ISO–NE from two generation plants in Connecticut: (1) The New Haven Harbor Generating Station; and, (2) the Bridgeport Harbor Generating Station, Unit 2. Power Connecticut requests an effective date of November 18, 2004.

Comment Date: 5 p.m. eastern time on December 8, 2004.

20. PJM Interconnection, L.L.C.

[Docket No. RT01–2–016]

Take notice that on November 17, 2004, PJM Interconnection, L.L.C. (PJM) submitted a compliance filing pursuant to the Commission's order issued October 18, 2004, in Docket No. RT01–2–011, *et al.*, 109 FERC ¶ 61,067.

PJM states that copies of this filing have been served on all parties, as well as on all PJM Members and the state electric utility regulatory commissions in the PJM region.

Comment Date: 5 p.m. eastern time on December 8, 2004.

Standard Paragraph

Any person desiring to intervene or to protest this filing must file in accordance with Rules 211 and 214 of the Commission's Rules of Practice and Procedure (18 CFR 385.211 and 385.214). Protests will be considered by the Commission in determining the appropriate action to be taken, but will not serve to make protestants parties to the proceeding. Any person wishing to become a party must file a notice of intervention or motion to intervene, as appropriate. Such notices, motions, or protests must be filed on or before the comment date. Anyone filing a motion to intervene or protest must serve a copy of that document on the Applicant and all parties to this proceeding.

The Commission encourages electronic submission of protests and interventions in lieu of paper using the ''eFiling'' link at *http://www.ferc.gov.* Persons unable to file electronically should submit an original and 14 copies of the protest or intervention to the Federal Energy Regulatory Commission, 888 First Street, NE., Washington, DC 20426.

This filing is accessible on-line at *http://www.ferc.gov,* using the ''eLibrary'' link and is available for review in the Commission's Public Reference Room in Washington, DC. There is an ''eSubscription'' link on the Web site that enables subscribers to receive e-mail notification when a document is added to a subscribed docket(s). For assistance with any FERC Online service, please e-mail *FERCOnlineSupport@ferc.gov,* or call (866) 208–3676 (toll free). For TTY, call (202) 502–8659.

Magalie R. Salas,

Secretary.

[FR Doc. E4–3562 Filed 12–7–04; 8:45 am]

BILLING CODE 6717–01–P

DEPARTMENT OF ENERGY

Federal Energy Regulatory Commission

Docket Nos. CP05–29–000, CP05–30–000, and CP05–31–000]

Freebird Gas Storage, L.L.C.; Notice of Intent To Prepare an Environmental Assessment for the Proposed Freebird Gas Storage Project and Request for Comments on Environmental Issues

December 2, 2004.

The staff of the Federal Energy Regulatory Commission (FERC or

Commission) will prepare an environmental assessment (EA) that will discuss the environmental impacts of the Freebird Gas Storage Project involving construction and operation of facilities by Freebird Gas Storage, L.L.C. (Freebird) in Lamar County, Alabama.[1] These facilities would raise the capacity of the East Detroit Gas Storage Field. The facilities would also consist of five new compressor units, eight additional well heads, two new flow lines, a 4.48 mile 16-inch bi-directional lateral to connect the storage facility to the ''500 leg'' of the Tennessee Gas Pipeline Company (Tennessee) upstream of Tennessee's Compression Station 550. At the interconnection with Tennessee a new meter station and various regulator facilities would be constructed.

The applicant also requests authorization for a blanket certificate.

This EA will be used by the Commission in its decision-making process to determine whether the project is in the public convenience and necessity.

If you are a landowner receiving this notice, you may be contacted by a pipeline company representative about the acquisition of an easement to construct, operate, and maintain the proposed facilities. The pipeline company would seek to negotiate a mutually acceptable agreement. However, if the project is approved by the Commission, that approval conveys with it the right of eminent domain. Therefore, if easement negotiations fail to produce an agreement, the pipeline company could initiate condemnation proceedings in accordance with state law.

A fact sheet prepared by the FERC entitled ''An Interstate Natural Gas Facility On My Land? What Do I Need To Know?'' was attached to the project notice Freebird provided to landowners. This fact sheet addresses a number of typically asked questions, including the use of eminent domain and how to participate in the Commission's proceedings. It is available for viewing on the FERC Internet Web site (*http://www.ferc.gov*).

Summary of the Proposed Project

Freebird proposes to purchase and expand the existing East Detroit Gas Storage Field, (currently a non-jurisdictional facility) located in Lamar County, Alabama. The storage field is currently owned by Northwest Alabama Gas District. The applicant would raise the capacity of the storage field from 1.44 billion cubic feet (Bcf) to approximately 7.5 Bcf. Five new compressor units would be installed onsite at the existing compressor station to increase available compression from 4,000 to 15,870 horsepower (hp), which would provide a withdrawal rate of 160,000 million cubic feet (Mcf) per day for 30 consecutive days. Eight wells would be drilled and two new gathering lines, 0.65 and 0.41 miles in length, would be constructed within the existing boundaries of the storage facility. A 4.48 mile, 16-inch bi-directional lateral would be constructed to connect the storage facility to the ''500 leg'' of the Tennessee Gas Pipeline Company (Tennessee). At the interconnection with Tennessee, a new meter station would be constructed. Regulator facilities, located at the new meter station, will include a scraper trap, meters, associated piping for bi-directional flow, a chromatograph building, pressure regulation, and a heater. The location of the project facilities is shown in Appendix 1.[2]

Land Requirements for Construction

Construction of the proposed facilities would require about 69.21 acres of land. Following construction, about 49.29 acres would be maintained as new aboveground facility sites. The remaining 19.92 acres of land would be restored and allowed to revert to its former use.

The EA Process

The National Environmental Policy Act (NEPA) requires the Commission to take into account the environmental impacts that could result from an action whenever it considers the issuance of a Certificate of Public Convenience and Necessity. NEPA also requires us to discover and address concerns the public may have about proposals. This process is referred to as ''scoping''. The main goal of the scoping process is to focus the analysis in the EA on the important environmental issues. By this Notice of Intent, the Commission staff requests public comments on the scope of the issues to address in the EA. All comments received are considered during the preparation of the EA. State and local government representatives are encouraged to notify their constituents of this proposed action and encourage them to comment on their areas of concern.

In the EA, we[3] will discuss impacts that could occur as a result of the construction and operation of the project. We will also evaluate possible alternatives to the proposed project or portions of the project, and make recommendations on how to lessen or avoid impacts on the various resource areas.

Our independent analysis of the issues will be in the EA. Depending on the comments received during the scoping process, the EA may be published and mailed to federal, state, and local agencies, public interest groups, interested individuals, affected landowners, newspapers, libraries, and the Commission's official service list for this proceeding. A comment period will be allotted for review if the EA is published. We will consider all comments on the EA before we make our recommendations to the Commission.

Public Participation

You can make a difference by providing us with your specific comments or concerns about the project. By becoming a commentor, your concerns will be addressed in the EA and considered by the Commission. You should focus on the potential environmental effects of the proposal, alternatives to the proposal (including alternative locations and routes), and measures to avoid or lessen environmental impact. The more specific your comments, the more useful they will be. Please carefully follow these instructions to ensure that your comments are received in time and properly recorded:

- Send an original and two copies of your letter to: Magalie R. Salas, Secretary, Federal Energy Regulatory Commission, 888 First St., NE., Room 1A, Washington, DC 20426.
- Label one copy of the comments for the attention of Gas Branch (1).
- Reference docket numbers.
- Mail your comments so that they will be received in Washington, DC on or before January 5, 2005.

Please note that the commission strongly encourages electronic filing of any comments or interventions or protests to this proceeding. See 18 CFR 385.2001(a)(1)(iii) and the instructions on the Commission's Web site at *http://www.ferc.gov* under the ''e-Filing'' link and the link to the User's Guide. Prepare

[1] Freebird's application was filed with the Commission under section 7 of the Natural Gas Act and Part 157 of the Commission's regulations.

[2] The appendices referenced in this notice are not being printed in the **Federal Register**. Copies of all appendices, other than appendix 1 (maps), are available on the Commission's website at the ''eLibrary'' link or from the Commission(s Public Reference Room, 888 First Street, NE., Washington, DC 20426, or call (202) 502–8371. For instructions on connecting to eLibrary refer to the last page of this notice. Copies of the appendices were sent to all those receiving this notice in the mail.

[3] ''We'', ''us'', and ''our'' refer to the environmental staff of the Office of Energy Projects (OEP).

your submission in the same manner as you would if filing on paper and save it to a file on your hard drive. Before you can file comments, you will need to create an account by clicking on ''login to file'' and then ''New User Account''. You will be asked to select the type of filing you are making. This filing is considered a ''comment on filing.''

Becoming an Intervenor

In addition to involvement in the EA scoping process, you may want to become an official party to the proceeding known as an ''intervenor''. Intervenors play a more formal role in the process. Among other things, intervenors have the right to receive copies of case-related Commission documents and filings by other intervenors. Likewise, each intervenor must send one electronic copy (using the Commission's eFiling system) or 14 paper copies of its filings to the Secretary of the Commission and must send a copy of its filings to all other parties on the Commission's service list for this proceeding. If you want to become an intervenor you must file a motion to intervene according to Rule 214 of the Commission's Rules of Practice and Procedure (18 CFR 385.214, see Appendix 2).[4] Only intervenors have the right to seek rehearing of the Commission's decision.

Affected landowners and parties with environmental concerns may be granted intervenor status upon showing good cause by stating that they have a clear and direct interest in this proceeding which would not be adequately represented by any other parties. You do not need intervenor status to have your environmental comments considered.

Environmental Mailing List

An effort is being made to send this notice to all individuals, organizations, and government entities interested in and/or potentially affected by the proposed project. This includes all landowners who are potential right-of-way grantors, whose property may be used temporarily for project purposes, or who own homes within distances defined in the Commission's regulations of certain aboveground facilities.

Additional Information

Additional information about the project is available from the Commission's Office of External Affairs, at 1–866–208–FERC or on the FERC Internet Web site (*http://www.ferc.gov*) using the eLibrary link. Click on the eLibrary link, click on ''General Search'' and enter the docket number excluding the last three digits in the Docket Number field. Be sure you have selected an appropriate date range. For assistance with eLibrary, the eLibrary helpline can be reached at 1–866–208–3676, TTY (202) 502–8659, or at *FERCOnlineSupport@ferc.gov*. The eLibrary link also provides access to the texts of formal documents issued by the Commission, such as orders, notices, and rulemakings.

In addition, the Commission now offers a free service called eSubscription which allows you to keep track of all formal issuances and submittals in specific dockets. This can reduce the amount of time you spend researching proceedings by automatically providing you with notification of these filings, document summaries and direct links to the documents. Go to *http://www.ferc.gov/esubscribenow.htm*.

Magalie R. Salas,

Secretary.

[FR Doc. E4–3539 Filed 12–7–04; 8:45 am]

BILLING CODE 6717–01–P

[4] Interventions may also be filed electronically via the Internet in lieu of paper. See the previous discussion on filing comments electronically.

DEPARTMENT OF ENERGY

Federal Energy Regulatory Commission

[Docket No. RM05–1–000]

Regulations Governing the Conduct of Open Seasons for Alaska Natural Gas Transportation Projects; Supplemental Notice of Technical Conference and Agenda

November 29, 2004.

Take notice that as previously announced on October 26, 2004, the Federal Energy Regulatory Commission will host a technical conference in this proceeding on December 3, 2004 in Anchorage, Alaska. The Commission has initiated a rulemaking to establish regulations governing the conduct of open seasons for capacity on any Alaska natural gas transportation projects. These regulations are required by section 103(e) of the Alaska Natural Gas Pipeline Act of 2004, enacted into law on October 13, 2004.

The Commission's Notice of Proposed Rulemaking (NOPR) was issued in the above referenced Docket on November 15, 2004. The NOPR contains a preamble explaining the background of the proposed rule, several specific questions about issues related to the proposed rule, and specific proposed regulatory text. Written comments on the NOPR are required to be submitted by December 17, 2004. The Commission must issue regulations within 120 days of enactment of the Act, that is, by February 10, 2005. The Commission is now providing its agenda for the technical conference. All interested parties and the public are invited to attend.

Conference Information

Date: December 3, 2004.

Time: 10 a.m. to 4 p.m. Alaska time (2 p.m. to 8 p.m. eastern standard time).

Location: Municipality of Anchorage, Loussac Library, Assembly Chambers, 3600 Denali Street, Anchorage, Alaska 99503.

Summary of Proposed Regulations

The full text of the Notice of Proposed Rulemaking is available through the Commission's eLibrary under Docket No. RM05–1. The proposed regulations first set forth the purpose and applicability of the proposed rules and certain definitions. That purpose is to prescribe rules for the conduct of any open season on any Alaska natural gas transportation project. Any applicant for a proposed Alaska natural gas transportation project must include a showing in its application to construct a project that it has conducted an open season for capacity allocation that fully complies with the requirements of the rules.

The proposed rule requires that a public notice of an open season be issued by the project sponsor at least 30 days prior to the commencement of the open season through methods including postings on Internet Web sites, press releases, direct mail solicitations, and other advertising. Next, the proposed rule lists the information about a proposed project that any notice of open season for an Alaska natural gas transportation project must contain. The proposed rule states that an open season for an Alaska natural gas transportation project must remain open for a period of at least 90 days. Finally, the proposed rule requires that capacity allocated as a result of any open season shall be awarded without undue discrimination or preference of any kind.

Technical Conference Agenda

The Agenda for the technical conference is attached. In order to more efficiently use the limited time available, there will only be oral presentations at this conference; no power point presentations or use of other visual aids are being considered. Speakers should limit their prepared remarks to 10 minutes or less and be prepared to discuss the issues listed below with the Commission and their fellow panelists.

The Commission will first receive comments from a panel of Alaska Elected Officials. Then the Commission Staff will present a short summary of the Notice of Proposed Rulemaking. Next the Commission will hear comments from panels representing Potential Project Sponsors, Potential Project Shippers, and Other Agencies or Affected Enterprises. Lastly, the Technical Conference will close with an Open Forum featuring responses or questions based on previous panels and any additional points of view.

The Notice of Proposed Rulemaking includes five questions which the Commission expects will be addressed in detail in each interested party's written comments submitted by December 17th. However, as a guide to the discussions at the technical conference, panelists should be prepared to discuss the following general topics regarding the Notice of Proposed Rulemaking:

- Explain how the proposed rule meets or does not meet the requirements of the Alaska Natural Gas Pipeline Act.
- When should FERC oversight of capacity allocation activities of potential project sponsors begin? What capacity allocation activities happen before an open season under the rule is undertaken?
- Are there certain capacity allocation issues/factors that are specific to the type of project sponsor, whether producer owned or independent pipeline owned; in-state shipper/user or lower-48 market shipper; producer/marketers or end-users; down-stream transporter, upstream gathering/processing, local utility regulators?
- Should potential project sponsors be required to conduct and release results of Alaska market need studies before capacity is allocated? Should potential project sponsors be required to conduct and release results of Alaska infrastructure studies before capacity is allocated?

Further Information

Transcripts of the conference will be immediately available from Ace Reporting Company (202–347–3700 or 1–800–336–6646) for a fee. They will be available for the public on the Commission's eLibrary system seven calendar days after FERC receives the transcript. For information about this proceeding, interested persons may go to the Commission's Web site, *http://www.ferc.gov,* and search under the docket number for this proceeding, Docket No. RM05–1. Materials for the conference will also be posted on the Commission's monthly calendar page for this event. Also, materials already provided to the Commission Staff by certain interested parties have already been placed in the record of this proceeding and are available electronically through the Commission's eLibrary under Docket No. RM05–1.

Additionally, Capitol Connection offers the opportunity for remote listening of the conference via the Internet or a Phone Bridge Connection for a fee. Interested persons should make arrangements as soon as possible by visiting the Capitol Connection Web site at *http://www.capitolconnection.gmu.edu* and clicking on ''FERC.'' If you have any questions contact David Reininger or Julia Morelli at the Capitol Connection (703–993–3100).

Any questions or comments about this technical conference may be directed to: Edwin Holden, 202–502–8089, *Edwin.Holden@ferc.gov* or Richard Foley, 202–502–8955, *Richard.Foley@ferc.gov.*

Magalie R. Salas,

Secretary.

Technical Conference on Regulations Governing the Conduct of Open Seasons for Alaska Natural Gas Transportation Projects

Agenda

10 a.m. Opening Remarks—Pat Wood, III, Chairman, Federal Energy Regulatory Commission (FERC);
Nora Mead Brownell, Commissioner, FERC;
Joseph T. Kelliher, Commissioner, FERC;
Suedeen G. Kelly, Commissioner, FERC.

10:15 a.m. Panel I—Alaska Elected Officials. Introductions: Pat Wood, III, Chairman, FERC.
- Alaska Governor Frank H. Murkowski.
- Alaska Senator Lisa Murkowski.
- Alaska State Senate President Gene Therriault.
- Alaska State Representative Ralph Samuels.

11:30 a.m. Overview of the Proposed Rule for Regulations Governing the Conduct of Open Seasons for Alaska Natural Gas Transportation Projects Introduction: Robert Cupina, Deputy Director, Office of Energy Projects, FERC.
Edwin Holden, Staff Counsel, FERC.

11:50 a.m. Panel 2—Comments on Proposed Rules by Potential Project Sponsors; Moderator, Robert Cupina.

Panelists:
- Tony Palmer, Vice President, TransCanada PipeLines Ltd.;
- Richard Guerrant, Vice President, ExxonMobil Gas;
- Ken Konrad, Senior Vice President, BP Exploration Alaska Inc.;
- Joe Marushack, Vice President, ANS Gas Development, ConocoPhillips Alaska;
- Ron Brintnell, Director of Business Development, Enbridge Energy Company, Inc.;
- Tom Irwin, Commissioner, Alaska Dept. of Natural Resources.

1:15 p.m. Panel 3—Comments on Proposed Rules by Potential Project Shippers; Moderator, Robert Cupina.

Panelists:
- Dave Anderson, Vice President International, Anadarko Petroleum Corporation and Mark Hanley, Manager Public Affairs/Alaska, Anadarko Petroleum Corporation;
- Tony Izzo, President, Enstar Natural Gas Company;
- Rick Mott, Vice President, Exploration and Land, ConocoPhillips Alaska;
- Bill Corbus, Commissioner, Alaska Department of Revenue.

2:15 p.m. Panel 4—Comments on Proposed Rules by Other Agencies, Affected Enterprises or General Public; Moderator, Robert Cupina.

Panelists:
- Harold Heinze, Chief Executive, Alaska Natural Gas Development Authority (ANGDA);
- Jeff Walker, Regional Supervisor Field Operations, Department of the Interior Minerals Management Service;
- Colleen McCarthy, Deputy State Director, Energy, Bureau of Land Management;
- David Houseknecht, Research Geologist, U.S. Geological Survey (traditional reserves);
- Timothy Collett, Geologist, U.S. Geological Survey (hydrate resources).

3:15 p.m. Open Forum—Moderator: Robert Cupina.
- Responses/questions to previous discussions.
- Additional points of view.

4 p.m. Closing Remarks/Adjourn; Commissioners/Robert Cupina.

[FR Doc. 04–26875 Filed 12–7–04; 8:45 am]

BILLING CODE 6717–01–P

ENVIRONMENTAL PROTECTION AGENCY

[OPP–2004–0395; FRL–7688–9]

FIFRA Scientific Advisory Panel; Notice of Public Meeting

AGENCY: Environmental Protection Agency (EPA).

ACTION: Notice.

SUMMARY: There will be a 2-day meeting of the Federal Insecticide, Fungicide, and Rodenticide Act Scientific Advisory Panel (FIFRA SAP) to consider and review human health issues associated with the Cry34Ab1 protein.

DATES: The meeting will be held on March 1–2, 2005, from 8:30 a.m. to approximately 5 p.m, eastern time.

Comments: For the deadlines for the submission of requests to present oral comments and the submission of written comments, see Unit I.E. of the **SUPPLEMENTARY INFORMATION**.

Nominations: Nominations of scientific experts to serve as ad hoc

members of the FIFRA SAP for this meeting should be provided on or before December 20, 2004.

Special seating: Requests for special seating arrangements should be made at least 5 business days prior to the meeting.

ADDRESSES: The meeting will be held at the Holiday Inn-National Airport, 2650 Jefferson Davis Highway, Arlington,VA 22202. The telephone number for the Holiday Inn-National Airport is 703–684–7200.

Comments: Written comments may be submitted electronically (preferred), through hand delivery/courier, or by mail. Follow the detailed instructions as provided in Unit I. of the **SUPPLEMENTARY INFORMATION.**

Nominations, Requests to present oral comments, and Special seating: To submit nominations for ad hoc members of the FIFRA SAP for this meeting, requests for special seating arrangements, or requests to present oral comments, notify the Designated Federal Official (DFO) listed under **FOR FURTHER INFORMATION CONTACT.**. To ensure proper receipt by EPA, your request must identify docket ID number OPP–2004–0395 in the subject line on the first page of your response.

FOR FURTHER INFORMATION CONTACT: Paul I. Lewis, DFO, Office of Science Coordination and Policy (7201M), Environmental Protection Agency, 1200 Pennsylvania Ave., NW., Washington, DC 20460; telephone number: 202–564–8450; fax number: 202–564–8382; e-mail addresses: *lewis.paul@epa.gov*.

SUPPLEMENTARY INFORMATION:

I. General Information

A. Does this Action Apply to Me?

This action is directed to the public in general. This action may, however, be of interest to persons who are or may be required to conduct testing of chemical substances under the Federal Food, Drug, and Cosmetic Act (FFDCA), FIFRA, and the Food Quality Protection Act of 1996 (FQPA). Since other entities may also be interested, the Agency has not attempted to describe all the specific entities that may be affected by this action. If you have any questions regarding the applicability of this action to a particular entity, consult the DFO listed under **FOR FURTHER INFORMATION CONTACT**.

B. How Can I Get Copies of this Document and Other Related Information?

1. *Docket*. EPA has established an official public docket for this action under docket ID number OPP–2004–0395. The official public docket consists of the documents specifically referenced in this action, any public comments received, and other information related to this action. Although, a part of the official docket, the public docket does not include Confidential Business Information (CBI) or other information whose disclosure is restricted by statute. The official public docket is the collection of materials that is available for public viewing at the Public Information and Records Integrity Branch (PIRIB), Rm. 119, Crystal Mall #2, 1801 South Bell St., Arlington, VA. This docket facility is open from 8:30 a.m. to 4 p.m., Monday through Friday, excluding legal holidays. The docket telephone number is (703) 305–5805.

2. *Electronic access*. You may access this **Federal Register** document electronically through the EPA Internet under the ''**Federal Register**'' listings at *http://www.epa.gov/fedrgstr/*.

EPA's position paper, charge/questions to FIFRA SAP, FIFRA SAP composition (i.e., members and consultants for this meeting) and the meeting agenda will be available as soon as possible, but no later than early February 2005. In addition, the Agency may provide additional background documents as the materials become available. You may obtain electronic copies of these documents, and certain other related documents that might be available electronically, from the FIFRA SAP Internet Home Page at *http://www.epa.gov/scipoly/sap*.

An electronic version of the public docket is available through EPA's electronic public docket and comment system, EPA Dockets. You may use EPA Dockets at *http://www.epa.gov/edocket/* to submit or view public comments, access the index listing of the contents of the official public docket, and to access those documents in the public docket that are available electronically. Once in the system, select ''search,'' then key in the appropriate docket ID number.

Certain types of information will not be placed in EPA Dockets. Information claimed as CBI and other information whose disclosure is restricted by statute, which is not included in the official public docket, will not be available for public viewing in EPA's electronic public docket. EPA's policy is that copyrighted material will not be placed in EPA's electronic public docket but will be available only in printed, paper form in the official public docket. To the extent feasible, publicly available docket materials will be made available in EPA's electronic public docket. When a document is selected from the index list in EPA Dockets, the system will identify whether the document is available for viewing in EPA's electronic public docket. Although not all docket materials may be available electronically, you may still access any of the publicly available docket materials through the docket facility identified in Unit I.B.1. EPA intends to work towards providing electronic access to all of the publicly available docket materials through EPA's electronic public docket.

For public commenters, it is important to note that EPA's policy is that public comments, whether submitted electronically or in paper, will be made available for public viewing in EPA's electronic public docket as EPA receives them and without change, unless the comment contains copyrighted material, CBI, or other information whose disclosure is restricted by statute. When EPA identifies a comment containing copyrighted material, EPA will provide a reference to that material in the version of the comment that is placed in EPA's electronic public docket. The entire printed comment, including the copyrighted material, will be available in the public docket.

Public comments submitted on computer disks that are mailed or delivered to the docket will be transferred to EPA's electronic public docket. Public comments in hard copy that are mailed or delivered to the docket will be scanned and placed in EPA's electronic public docket. Where practical, physical objects will be photographed, and the photograph will be placed in EPA's electronic public docket along with a brief description written by the docket staff.

C. How and to Whom Do I Submit Comments?

You may submit comments electronically (preferred), through hand delivery/courier, or by mail. To ensure proper receipt by EPA, identify the appropriate docket ID number in the subject line on the first page of your comment. Please ensure that your comments are submitted within the specified comment period. Comments received after the close of the comment period will be marked ''late.'' EPA is not required to consider these late comments. Do not use EPA Dockets or e-mail to submit CBI or information protected by statute.

1. *Electronically*. If you submit an electronic comment as prescribed in this unit, EPA recommends that you include your name, mailing address, and an e-mail address or other contact information in the body of your comment. Also include this contact information on the outside of any disk

or CD ROM you submit, and in any cover letter accompanying the disk or CD ROM. This ensures that you can be identified as the submitter of the comment and allows EPA to contact you in case EPA cannot read your comment due to technical difficulties or needs further information on the substance of your comment. EPA's policy is that EPA will not edit your comment, and any identifying or contact information provided in the body of a comment will be included as part of the comment that is placed in the official public docket, and made available in EPA's electronic public docket. If EPA cannot read your comment due to technical difficulties and cannot contact you for clarification, EPA may not be able to consider your comment.

i. *EPA Dockets*. Your use of EPA's electronic public docket to submit comments to EPA electronically is EPA's preferred method for receiving comments. Go directly to EPA Dockets at *http://www.epa.gov/edocket/*, and follow the online instructions for submitting comments. Once in the system, select ''search,'' and then key in docket ID number OPP–2004–0395. The system is an ''anonymous access'' system, which means EPA will not know your identity, e-mail address, or other contact information unless you provide it in the body of your comment.

ii. *E-mail*. Comments may be sent by e-mail to *opp-docket@epa.gov*, Attention: Docket ID Number OPP–2004–0395. In contrast to EPA's electronic public docket, EPA's e-mail system is not an ''anonymous access'' system. If you send an e-mail comment directly to the docket without going through EPA's electronic public docket, EPA's e-mail system automatically captures your e-mail address. E-mail addresses that are automatically captured by EPA's e-mail system are included as part of the comment that is placed in the official public docket, and made available in EPA's electronic public docket.

iii. *Disk or CD ROM*. You may submit comments on a disk or CD ROM that you deliver as described in Unit I.C.2. or mail to the address provided in Unit I.C.3. These electronic submissions will be accepted in WordPerfect or ASCII file format. Avoid the use of special characters and any form of encryption.

2. *By hand delivery or courier*. Deliver your comments to: Public Information and Records Integrity Branch (PIRIB), Office of Pesticide Programs (OPP), Environmental Protection Agency, Rm. 119, Crystal Mall #2, 1801 South Bell St., Arlington, VA, Attention: Docket ID Number OPP–2004–0395. Such deliveries are only accepted during the docket's normal hours of operation as identified in Unit I.B.1.

3. *By mail*. Due to potential delays in EPA's receipt and processing of mail, respondents are strongly encouraged to submit comments either electronically or by hand delivery or courier. We cannot guarantee that comments sent via mail will be received prior to the close of the comment period. If mailed, please send your comments to: Public Information and Records Integrity Branch (PIRIB) (7502C), Office of Pesticide Programs (OPP), Environmental Protection Agency, 1200 Pennsylvania Ave., NW., Washington, DC 20460–0001, Attention: Docket ID Number OPP–2004–0395.

D. What Should I Consider as I Prepare My Comments for EPA?

You may find the following suggestions helpful for preparing your comments:

1. Explain your views as clearly as possible.
2. Describe any assumptions that you used.
3. Provide copies of any technical information and/or data you used that support your views.
4. Provide specific examples to illustrate your concerns.
5. Make sure to submit your comments by the deadline in this document.
6. To ensure proper receipt by EPA, be sure to identify the docket ID number assigned to this action in the subject line on the first page of your response. You may also provide the name, date, and **Federal Register** citation.

E. How May I Participate in this Meeting?

You may participate in this meeting by following the instructions in this unit. To ensure proper receipt by EPA, it is imperative that you identify docket ID number OPP–2004–0395 in the subject line on the first page of your request.

1. *Oral comments*. Oral comments presented at the meetings should not be repetitive of previously submitted oral or written comments. Although requests to present oral comments are accepted until the date of the meeting (unless otherwise stated), to the extent that time permits, interested persons may be permitted by the Chair of FIFRA SAP to present oral comments at the meeting. Each individual or group wishing to make brief oral comments to FIFRA SAP is strongly advised to submit their request to the DFO listed under **FOR FURTHER INFORMATION CONTACT** no later than noon, eastern time, February 24, 2005, in order to be included on the meeting agenda. The request should identify the name of the individual making the presentation, the organization (if any) the individual will represent, and any requirements for audiovisual equipment (e.g., overhead projector, 35 mm projector, chalkboard). Oral comments before FIFRA SAP are limited to approximately 5 minutes unless prior arrangements have been made. In addition, each speaker should bring 30 copies of his or her comments and presentation slides for distribution to FIFRA SAP at the meeting.

2. *Written comments*. Although submission of written comments are accepted until the date of the meeting (unless otherwise stated), the Agency encourages that written comments be submitted, using the instructions in Unit I., no later than noon, eastern time, February 24, 2005, to provide FIFRA SAP the time necessary to consider and review the written comments. There is no limit on the extent of written comments for consideration by FIFRA SAP. Persons wishing to submit written comments at the meeting should contact the DFO listed under **FOR FURTHER INFORMATION CONTACT** and submit 30 copies.

3. *Seating at the meeting*. Seating at the meeting will be on a first-come basis. Individuals requiring special accommodations at this meeting, including wheelchair access and assistance for the hearing impaired, should contact the DFO at least 5 business days prior to the meeting using the information under **FOR FURTHER INFORMATION CONTACT** so that appropriate arrangements can be made.

4. *Request for nominations of prospective candidates for service as ad hoc members of the FIFRA SAP for this meeting*. As part of a broader process for developing a pool of candidates for each meeting, the FIFRA SAP staff routinely solicit the stakeholder community for nominations of prospective candidates for service as ad hoc members of the FIFRA SAP. Any interested person or organization may nominate qualified individuals to be considered as prospective candidates for a specific meeting. Individuals nominated for this meeting should have expertise in one or more of the following areas: Allergenicity, enzyme kinetics, pepsin digestibility assays, and proteases. Nominees should be scientists who have sufficient professional qualifications, including training and experience, to be capable of providing expert comments on the scientific issues for this meeting. Nominees should be identified by name, occupation, position, address, and telephone number. Nominations should be provided to the DFO listed under **FOR**

FURTHER INFORMATION CONTACT on or before December 20, 2004.

The Agency will consider all nominations of prospective candidates for this meeting that are received on or before this date. However, final selection of ad hoc members for this meeting is a discretionary function of the Agency.

The selection of scientists to serve on the FIFRA SAP is based on the function of the panel and the expertise needed to address the Agency's charge to the panel. No interested scientists shall be ineligible to serve by reason of their membership on any other advisory committee to a Federal department or agency or their employment by a Federal department or agency (except the EPA). Other factors considered during the selection process include availability of the potential panel member to fully participate in the panel's reviews, absence of any conflicts of interest or appearance of lack of impartiality, independence with respect to the matters under review, and lack of bias. Though financial conflicts of interest, the appearance of lack of impartiality, lack of independence, and bias may result in disqualification, the absence of such concerns does not assure that a candidate will be selected to serve on the FIFRA SAP. Numerous qualified candidates are identified for each panel. Therefore, selection decisions involve carefully weighing a number of factors including the candidates' areas of expertise and professional qualifications and achieving an overall balance of different scientific perspectives on the panel. In order to have the collective breadth of experience needed to address the Agency's charge for this meeting, the Agency anticipates selecting approximately 12 ad hoc scientists.

If a prospective candidate for service on the FIFRA SAP is considered for participation in a particular session, the candidate is subject to the provisions of 5 CFR part 2634, Executive Branch Financial Disclosure, as supplemented by the EPA in 5 CFR part 6401. As such, the FIFRA SAP candidate is required to submit a Confidential Financial Disclosure Form for Special Government Employees Serving on Federal Advisory Committees at the U.S. Environmental Protection Agency (EPA Form 3110–48 5–02) which shall fully disclose, among other financial interests, the candidate's employment, stocks, and bonds, and where applicable, sources of research support. The EPA will evaluate the candidate's financial disclosure form to assess that there are no financial conflicts of interest, no appearance of lack of impartiality and no prior involvement with the development of the documents under consideration (including previous scientific peer review) before the candidate is considered further for service on the FIFRA SAP.

Those who are selected from the pool of prospective candidates will be asked to attend the public meetings and to participate in the discussion of key issues and assumptions at these meetings. In addition, they will be asked to review and to help finalize the meeting minutes. The list of FIFRA SAP members participating at this meeting will be posted on the FIFRA SAP web site or may be obtained by contacting the PIRIB at the address or telephone number listed in Unit I.

II. Background

A. Purpose of the FIFRA SAP

Amendments to FIFRA enacted November 28, 1975 (7 U.S.C. 136w(d)), include a requirement under section 25(d) of FIFRA that notices of intent to cancel or reclassify pesticide registrations pursuant to section 6(b)(2) of FIFRA, as well as proposed and final forms of regulations pursuant to section 25(a) of FIFRA, be submitted to a SAP prior to being made public or issued to a registrant. In accordance with section 25(d) of FIFRA, the FIFRA SAP is to have an opportunity to comment on the health and environmental impact of such actions. The FIFRA SAP also shall make comments, evaluations, and recommendations for operating guidelines to improve the effectiveness and quality of analyses made by Agency scientists. Members are scientists who have sufficient professional qualifications, including training and experience, to be capable of providing expert comments as to the impact on health and the environment of regulatory actions under sections 6(b) and 25(a) of FIFRA. The Deputy Administrator appoints seven individuals to serve on the FIFRA SAP for staggered terms of 4 years, based on recommendations from the National Institutes of Health and the National Science Foundation.

Section 104 of FQPA (Public Law 104–170) established the FQPA Science Review Board (SRB). These scientists shall be available to the FIFRA SAP on an ad hoc basis to assist in reviews conducted by the FIFRA SAP.

B. Public Meeting

The FIFRA SAP will meet to consider and review human health issues associated with the Cry34Ab1 protein. Dow AgroSciences and Pioneer Hi-Bred International, Inc. have submitted applications for FIFRA section 3 registration of the plant-incorporated protectant (PIP) *Bacillus thuringiensis* Cry34Ab1 and Cry35Ab1 proteins and the genetic material necessary for their production in corn. These products are intended to provide protection against western and northern corn rootworm larvae.

Although a tolerance exemption is in place for Cry34/35, this exemption is temporary and was granted for Experimental Use Permits (EUPs) for Dow and Pioneer totaling 5867 acres. The Agency is still evaluating the allergenicity potential of Cry34/35 as part of the current request for section 3 registration. In assessing the allergenicity potential, the Agency is using a weight of the evidence approach that utilizes information on amino acid sequence, source of the trait, prevalence in food, and biochemical properties of the proteins. Cry34Ab1 and Cry35Ab1 do not have properties that would indicate a potential for allergenicity, given the current state of knowledge. However, Cry34Ab1 does appear to digest more slowly in simulated gastric fluid (SGF) than other registered proteins. Moreover, it digests faster than most allergens but slower than most previously tested non–allergens.

As part of the registrants' request for an EUP and temporary exemption from the requirement of a tolerance, they have submitted several studies investigating the in vitro digestibility of the proteins in simulated gastric fluid (SGF), which contains the enzyme pepsin.

In the first submitted study, Cry35Ab1 was shown to digest within 1-5 minutes. Cry34Ab1 was shown to digest within 20-30 minutes. This study, as is typical of in vitro digestibility studies for PIPs, focused on the time required for the proteins to become undetectable, and therefore, the results are dependent on the detection limit of the analytical method used. Most other Cry proteins digest within 30 seconds to 5 minutes.

A second study used a kinetic approach where the rate of pepsin digestion of Cry34Ab1 was investigated by measuring the relative amount of Cry34Ab1 remaining at each of the time points. The registrants estimated the half-life and DT90 (time to 90% disappearance) to be 2 minutes and 6 minutes, respectively. In this experiment, Cry34Ab1 was undetectable after 15 to 20 minutes. Finally, the Agency has recently received a study from the registrants that further evaluates the kinetic method of assessing pepsin digestion using allergens and non-allergens.

Kinetic approach data from studies on Cry34Ab1 and studies with known allergens and non-allergens, as well as the Agency's allergenicity assessment of Cry34Ab1 will be presented to the FIFRA SAP. The Panel will be asked to consider the appropriateness of the kinetic approach, how digestion assays should be used in allergenicity assessments, and what assay conditions should be used for comparing the digestion of different proteins.

C. FIFRA SAP Meeting Minutes

The FIFRA SAP will prepare meeting minutes summarizing its recommendations to the Agency in approximately 60 days after the meeting. The meeting minutes will be posted on the FIFRA SAP web site or may be obtained by contacting the PIRIB at the address or telephone number listed in Unit I.

List of Subjects

Environmental protection, Pesticides and pests.

Dated: November 30, 2004.

Joseph Merenda, Jr,

Director, Office of Science Coordination and Policy.

[FR Doc. 04–26946 Filed 12–7–04; 8:45 am]

BILLING CODE 6560–50–S

ENVIRONMENTAL PROTECTION AGENCY

[OPP–2004–0377; FRL–7687–4]

Clothianidin; Notice of Filing a Pesticide Petition to Establish a Tolerance for a Certain Pesticide Chemical in or on Food

AGENCY: Environmental Protection Agency (EPA).

ACTION: Notice.

SUMMARY: This notice announces the initial filing of a pesticide petition proposing the establishment of regulations for residues of a certain pesticide chemical in or on various food commodities.

DATES: Comments, identified by docket identification (ID) number OPP–2004–0377 must be received on or before January 7, 2005.

ADDRESSES: Comments may be submitted electronically, by mail, or through hand delivery/courier. Follow the detailed instructions as provided in Unit I. of the **SUPPLEMENTARY INFORMATION**.

FOR FURTHER INFORMATION CONTACT: Dan Kenny, Registration Division (7505C), Office of Pesticide Programs, Environmental Protection Agency, 1200 Pennsylvania Ave., NW., Washington, DC 20460–0001; telephone number: (703) 305–7546; e-mail address: *Kenny.Dan@epa.gov*.

SUPPLEMENTARY INFORMATION:

I. General Information

A. Does this Action Apply to Me?

You may be potentially affected by this action if you an agricultural producer, food manufacturer, or pesticide manufacturer. Potentially affected entities may include, but are not limited to:

- Crop production (NAICS 111)
- Animal production (NAICS 112)
- Food manufacturing (NAICS 311)
- Pesticide manufacturing (NAICS 32532)

This listing is not intended to be exhaustive, but rather provides a guide for readers regarding entities likely to be affected by this action. Other types of entities not listed in this unit could also be affected. The North American Industrial Classification System (NAICS) codes have been provided to assist you and others in determining whether this action might apply to certain entities. If you have any questions regarding the applicability of this action to a particular entity, consult the person listed under **FOR FURTHER INFORMATION CONTACT**.

B. How Can I Get Copies of this Document and Other Related Information?

1. *Docket*. EPA has established an official public docket for this action under docket ID number OPP–2004–0377. The official public docket consists of the documents specifically referenced in this action, any public comments received, and other information related to this action. Although a part of the official docket, the public docket does not include Confidential Business Information (CBI) or other information whose disclosure is restricted by statute. The official public docket is the collection of materials that is available for public viewing at the Public Information and Records Integrity Branch (PIRIB), Rm. 119, Crystal Mall #2, 1801 South Bell St., Arlington, VA. This docket facility is open from 8:30 a.m. to 4 p.m., Monday through Friday, excluding legal holidays. The docket telephone number is (703) 305–5805.

2. *Electronic access*. You may access this **Federal Register** document electronically through the EPA Internet under the ''**Federal Register**'' listings at *http://www.epa.gov/fedrgstr/*.

An electronic version of the public docket is available through EPA's electronic public docket and comment system, EPA Dockets. You may use EPA Dockets at *http://www.epa.gov/edocket/* to submit or view public comments, access the index listing of the contents of the official public docket, and to access those documents in the public docket that are available electronically. Although not all docket materials may be available electronically, you may still access any of the publicly available docket materials through the docket facility identified in Unit I.B.1. Once in the system, select ''search,'' then key in the appropriate docket ID number.

Certain types of information will not be placed in the EPA Dockets. Information claimed as CBI and other information whose disclosure is restricted by statute, which is not included in the official public docket, will not be available for public viewing in EPA's electronic public docket. EPA's policy is that copyrighted material will not be placed in EPA's electronic public docket but will be available only in printed, paper form in the official public docket. To the extent feasible, publicly available docket materials will be made available in EPA's electronic public docket. When a document is selected from the index list in EPA Dockets, the system will identify whether the document is available for viewing in EPA's electronic public docket. Although not all docket materials may be available electronically, you may still access any of the publicly available docket materials through the docket facility identified in Unit I.B. EPA intends to work towards providing electronic access to all of the publicly available docket materials through EPA's electronic public docket.

For public commenters, it is important to note that EPA's policy is that public comments, whether submitted electronically or in paper, will be made available for public viewing in EPA's electronic public docket as EPA receives them and without change, unless the comment contains copyrighted material, CBI, or other information whose disclosure is restricted by statute. When EPA identifies a comment containing copyrighted material, EPA will provide a reference to that material in the version of the comment that is placed in EPA's electronic public docket. The entire printed comment, including the copyrighted material, will be available in the public docket.

Public comments submitted on computer disks that are mailed or delivered to the docket will be transferred to EPA's electronic public docket. Public comments that are mailed or delivered to the docket will be scanned and placed in EPA's electronic

public docket. Where practical, physical objects will be photographed, and the photograph will be placed in EPA's electronic public docket along with a brief description written by the docket staff.

C. How and To Whom Do I Submit Comments?

You may submit comments electronically, by mail, or through hand delivery/courier. To ensure proper receipt by EPA, identify the appropriate docket ID number in the subject line on the first page of your comment. Please ensure that your comments are submitted within the specified comment period. Comments received after the close of the comment period will be marked ''late.'' EPA is not required to consider these late comments. If you wish to submit CBI or information that is otherwise protected by statute, please follow the instructions in Unit I.D. Do not use EPA Dockets or e-mail to submit CBI or information protected by statute.

1. *Electronically*. If you submit an electronic comment as prescribed in this unit, EPA recommends that you include your name, mailing address, and an e-mail address or other contact information in the body of your comment. Also include this contact information on the outside of any disk or CD ROM you submit, and in any cover letter accompanying the disk or CD ROM. This ensures that you can be identified as the submitter of the comment and allows EPA to contact you in case EPA cannot read your comment due to technical difficulties or needs further information on the substance of your comment. EPA's policy is that EPA will not edit your comment, and any identifying or contact information provided in the body of a comment will be included as part of the comment that is placed in the official public docket, and made available in EPA's electronic public docket. If EPA cannot read your comment due to technical difficulties and cannot contact you for clarification, EPA may not be able to consider your comment.

i. *EPA Dockets*. Your use of EPA's electronic public docket to submit comments to EPA electronically is EPA's preferred method for receiving comments. Go directly to EPA Dockets at *http://www.epa.gov/edocket/*, and follow the online instructions for submitting comments. Once in the system, select ''search,'' and then key in docket ID number OPP–2004–0377. The system is an ''anonymous access'' system, which means EPA will not know your identity, e-mail address, or other contact information unless you provide it in the body of your comment.

ii. *E-mail*. Comments may be sent by e-mail to *opp-docket@epa.gov*, Attention: Docket ID Number OPP–2004–0377. In contrast to EPA's electronic public docket, EPA's e-mail system is not an ''anonymous access'' system. If you send an e-mail comment directly to the docket without going through EPA's electronic public docket, EPA's e-mail system automatically captures your e-mail address. E-mail addresses that are automatically captured by EPA's e-mail system are included as part of the comment that is placed in the official public docket, and made available in EPA's electronic public docket.

iii. *Disk or CD ROM*. You may submit comments on a disk or CD ROM that you mail to the mailing address identified in Unit I.C.2. These electronic submissions will be accepted in WordPerfect or ASCII file format. Avoid the use of special characters and any form of encryption.

2. *By mail*. Send your comments to: Public Information and Records Integrity Branch (PIRIB) (7502C), Office of Pesticide Programs (OPP), Environmental Protection Agency, 1200 Pennsylvania Ave., NW., Washington, DC 20460–0001, Attention: Docket ID Number OPP–2004–0377.

3. *By hand delivery or courier*. Deliver your comments to: Public Information and Records Integrity Branch (PIRIB), Office of Pesticide Programs (OPP), Environmental Protection Agency, Rm. 119, Crystal Mall #2, 1801 South Bell St., Arlington, VA, Attention: Docket ID Number OPP–2004–0377. Such deliveries are only accepted during the docket's normal hours of operation as identified in Unit I.B.1.

D. How Should I Submit CBI to the Agency?

Do not submit information that you consider to be CBI electronically through EPA's electronic public docket or by e-mail. You may claim information that you submit to EPA as CBI by marking any part or all of that information as CBI (if you submit CBI on disk or CD ROM, mark the outside of the disk or CD ROM as CBI and then identify electronically within the disk or CD ROM the specific information that is CBI). Information so marked will not be disclosed except in accordance with procedures set forth in 40 CFR part 2.

In addition to one complete version of the comment that includes any information claimed as CBI, a copy of the comment that does not contain the information claimed as CBI must be submitted for inclusion in the public docket and EPA's electronic public docket. If you submit the copy that does not contain CBI on disk or CD ROM, mark the outside of the disk or CD ROM clearly that it does not contain CBI. Information not marked as CBI will be included in the public docket and EPA's electronic public docket without prior notice. If you have any questions about CBI or the procedures for claiming CBI, please consult the person listed under **FOR FURTHER INFORMATION CONTACT**.

E. What Should I Consider as I Prepare My Comments for EPA?

You may find the following suggestions helpful for preparing your comments:

1. Explain your views as clearly as possible.

2. Describe any assumptions that you used.

3. Provide copies of any technical information and/or data you used that support your views.

4. If you estimate potential burden or costs, explain how you arrived at the estimate that you provide.

5. Provide specific examples to illustrate your concerns.

6. Make sure to submit your comments by the deadline in this notice.

7. To ensure proper receipt by EPA, be sure to identify the docket ID number assigned to this action in the subject line on the first page of your response. You may also provide the name, date, and **Federal Register** citation.

II. What Action is the Agency Taking?

EPA has received a pesticide petition as follows proposing the establishment and/or amendment of regulations for residues of a certain pesticide chemical in or on various food commodities under section 408 of the Federal Food, Drug, and Cosmetic Act (FFDCA), 21 U.S.C. 346a. EPA has determined that this petition contains data or information regarding the elements set forth in FFDCA section 408(d)(2); however, EPA has not fully evaluated the sufficiency of the submitted data at this time or whether the data support granting of the petition. Additional data may be needed before EPA rules on the petition.

List of Subjects

Environmental protection, Agricultural commodities, Feed additives, Food additives, Pesticides and pests, Reporting and record keeping requirements.

Dated: November 30, 2004.

Lois Rossi,

Director, Registration Division, Office of Pesticide Programs.

Summary of Petition

The petitioner summary of the pesticide petition is printed below as required by FFDCA section 408(d)(3). The summary of the petition was prepared by the petitioner and represents the view of the petitioner. The petition summary announces the availability of a description of the analytical methods available to EPA for the detection and measurement of the pesticide chemical residues or an explanation of why no such method is needed.

Arvesta Corporation

PP 4F6869

EPA has received a pesticide petition (4F6869) from Arvesta Corporation, 100 First Street, Suite 1700, San Francisco, CA 94105 proposing, pursuant to section 408(d) of the Federal Food, Drug, and Cosmetic Act (FFDCA), 21 U.S.C. 346a(d), to amend 40 CFR part 180 by establishing a tolerance for residues of clothianidin in or on the raw agricultural commodities grapes at 0.5 parts per million (ppm), raisins at 1.0 ppm, and potatoes at 0.1 ppm. EPA has determined that the petition contains data or information regarding the elements set forth in section 408(d)(2) of the FFDCA; however, EPA has not fully evaluated the sufficiency of the submitted data at this time or whether the data supports granting of the petition. Additional data may be needed before EPA rules on the petition.

A. Residue Chemistry

1. *Plant metabolism*. In plants, the metabolism of clothianidin is adequately understood for the purposes of establishing these proposed tolerances. Unchanged, parent clothianidin was the predominant residue in all crop matrices (14.4 to 64.5% in corn, 66.1 to 96.6% in tomatoes, 4.3 to 24.4% in sugar beets and 24.3 to 63.3% in apples), with the exception of sugar beet leaves. In sugar beet leaves, the main components were the methylguanidine and thiazolylmethylguanidine (TMG) metabolites, accounting for 28.6 and 27.7% respectively. All metabolites found in plants were also found in the animal metabolism studies. In animals, parent clothianidin was the major component in liver, muscle and fat. Based on the available metabolism data, parent clothianidin, TZG, TZU, and ATMG-Pyr are proposed to be considered as the residues of concern in livestock matrices.

2. *Analytical method*. In plants and plant products, the residue of concern, parent clothianidin, can be determined using high performance liquid chromatography (HPLC) with electrospray mass spectroscopy (MS/MS) detection. In an extraction efficiency testing, the plant residues method has also demonstrated the ability to extract aged clothianidin residue.

In animal matrices, the residues parent clothianidin, TZG, TZU, and ATMG-Pyr can also be determined using HPLC with electrospray MS/MS detection. In an extraction efficiency testing, the animal residues method can also extract aged clothianidin, TZG, TZU, and ATMG-Pyr residues.

Although for the plant and animal residues this HPLC-MS/MS method is highly suitable as an enforcement method, an LC-ultraviolet (UV) method has also been developed which is suitable for enforcement (monitoring) purposes in all relevant matrices.

3. *Magnitude of residues— i. Potatoes.* Fifteen residue trials were conducted in key potato producing regions of the United States. At each trial, two different application regimes, foliar and in-furrow, were studied in separate plots. Samples were analyzed for residues of clothianidin.

Three foliar applications of 0.0661 pounds (lb) per active ingredient/acre (ai/A) were made with the 50 WDG formulation at 28, 21 and 14 days prior to harvest. Clothianidin residues ranged from ND to 0.0205 ppm for this treatment.

One in-furrow application of 0.198 lb ai/A was made with the 16 WSG formulation. Clothianidin residues ranged from less than the limit of detection (LOD) (0.007 ppm) to 0.0332 ppm for this treatment.

At one of the trial sites, two additional plots were treated at 5X the normal application rate for the processing phase of the study. Spray volumes range from 13.3 to 31.2 gallons per acre (GPA). The processing portions analyzed were whole tubers, granules, chips, and wet peel.

The foliar application of 50WDG was made at the 5X rate of 0.331 lb ai/A for the processing phase of the study. All of the clothianidin mean residues were less than limit of quantitation (LOQ) except for granules, which had mean clothianidin residues of 0.0316 ppm. The concentration factor (CF) for granules was calculated as 3.2. It was not possible to calculate a reliable CF in commodities other than granules. A residue decline study indicated that residues do not increase with longer preharvest intervals (PHI).

The in-furrow application of 16WSG was made at the 5X rate of 0.99 lb ai/A for the processing phase of the study. Clothianidin mean residues in whole tubers, granules, chips, and wet peel were 0.0258, 0.0546, 0.04 (< LOQ), and 0.007 (<LOQ) ppm, respectively. The CF for granules, chips, and wet peel were 2.1, 1.6, and <1, respectively.

ii. *Grapes*. Twelve residue trials were conducted in key grape producing regions of the United States. At each trial two different application regimes, foliar and drip irrigation, were studied in separate plots. Samples were analyzed for residues of clothianidin.

Two foliar applications of 0.0992 lb ai/A/application were made with the 50 WDG formulation at 14 and 0 days prior to normal harvest. Clothianidin residues ranged from 0.0398 to 0.410 ppm for this treatment.

At all of the trial sites except two in New York, a plot was established with one drip application of the 16 WSG formulation at 0.1984 lb ai/A at 30 days prior to harvest. Clothianidin residues ranged from ND to 0.01 ppm (<LOQ) for this treatment.

At two of the trial sites, plots received two drip applications of 16 WSG at the 0.5X rate of 0.0992 lb ai/A. Clothianidin residues were all less than the LOD, ranging from 0.0005 to 0.006 ppm.

At one of the trial sites, two additional plots were treated at 5X the normal application rate for the processing phase of the study. The processing portions analyzed were whole fruit, raisins, and juice.

Two foliar applications of 50WDG were made at the 5X rate of 0.496 lb ai/A/application for the processing phase of the study. Clothianidin mean residues in whole fruit, raisins, and juice were 0.621, 1.02, and 0.707 ppm, respectively. The concentration factor (CF) was 1.64 for raisins and 1.14 for juice. A residue decline study indicated that residues do not increase with longer preharvest intervals (PHI).

The drip irrigation application of 16WSG was made at the 5X rate of 0.992 lb ai/A for the processing phase of the study. Clothianidin mean residues in whole fruit, raisins, and juice were 0.006, 0.009, and 0.004 ppm, respectively. Since the mean residues in whole fruit and processed commodities were <LOD, it was not possible to calculate a reliable CF for either processed commodity.

B. Toxicological Profile

1. *Acute toxicity*. The acute oral lethal dose $(LD)_{50}$ was >5,000 milligram/kilogram (mg/kg) for both male and

female rats and the acute dermal LD_{50} was >2,000 mg/kg in rats. The four-hour inhalation LC_{50} was 6.14 mg/L for male and female rats. Clothianidin was not a dermal or eye irritant in rabbits and was not a skin sensitizer in guinea pigs.

2. *Genotoxicty*. Extensive mutagenicity studies were conducted with clothianidin. Based on the weight of evidence, clothianidin was considered negative for genotoxicity.

3. *Reproductive and developmental toxicity*. In a 2–generation reproduction study with clothianidin, rats were administered dietary levels of 0, 150, 500 and 2,500 ppm. The no observed effect level (NOEL) for reproductive parameters was 2,500 ppm. The NOEL for developmental effects was 500 ppm based on decreased pup weights and the parental NOEL was 150 ppm based on decreased body weights (bw).

A developmental toxicity study was conducted in rats with clothianidin using dose levels of 0, 10, 50 and 125 mg/kg/day by gavage. The NOEL for maternal toxicity was established at 10 mg/kg and for developmental effects it was >125 mg/kg. Additionally, a developmental toxicity study was conducted with rabbits treated orally by gavage at 0, 10, 25, 75 and 100 mg/kg/day. The NOEL for maternal toxicity was 10 mg/kg and for developmental toxicity, it was 75 mg/kg.

Developmental toxicity studies showed no primary developmental toxicity and no teratogenic potential was evident.

4. *Subchronic toxicity*.90–day feeding studies were conducted in rats and dogs. The rat study was conducted at dietary levels of 0, 150, 500 and 3,000 ppm and the dog study was conducted at 0, 325, 650 and 1,500 ppm. The NOELs were established at 500 ppm for rat and 650 ppm for the dog.

5. *Chronic toxicity*. A 2–year combined rat chronic/oncogenicity study conducted at dietary levels of 0, 150, 500, 1,500 and 3,000 ppm demonstrated a NOEL of 150 ppm based on reduced weight gains and non-neoplastic histomorphological changes. A 78–week mouse oncogenicity study conducted at dose levels of 0, 100, 350, 1,250, and 2,000/1,800 ppm for males and females, respectively, revealed a NOEL of 350 ppm based on reduced bw gains and increased incidence of hypercellular hypertrophy. No evidence of oncogenicity was seen in the rats or the mice. A 52–week chronic toxicity study in dogs conducted at dietary levels of 0, 325, 650, 1,500 and 2,000 ppm revealed an overall NOEL of 325 ppm and no observed adverse effect level (NOAEL) of 650 ppm based on a slight decrease in ALT.

6. *Animal metabolism*. The nature of the clothianidin residue in livestock is adequately understood. In animals, parent clothianidin was the major component in liver, muscle and fat. Based on the available metabolism data, parent clothianidin, TZG, TZU, and ATMG-Pyr are proposed to be considered as the residues of concern in livestock matrices.

7. *Metabolite toxicology*. Eight *in vivo* metabolites of clothianidin identified in the rat were investigated for acute oral endpoint mutagenic activity. None of the metabolites were mutagenic either with or without activation and the LD_{50} values range from <500 to >2,000 mg/kg, showing low to moderate toxicity.

8. *Endocrine disruption*. All guideline studies conducted to characterize the toxicological profile showed no endocrine related toxicity or tumorgenicity. No effects on T3, T4, or TSH were observed in the subchronic rat study. In a 2–generation reproduction study in the rat, and rat and rabbit teratology studies, clothianidin did not show reproductive or teratogenic effects. The extensive database shows that clothianidin has no endocrine properties.

C. Aggregate Exposure

1. *Dietary exposure*. Tolerances are proposed for residues of clothianidin on grapes, raisins, and potatoes. For the purposes of assessing the potential dietary exposure for these proposed tolerances, an exposure assessment was conducted using Dietary Exposure Evaluation Model (DEEM™) software, consumption data derived from the 1994–1998 USDA Continuing Surveys of Food Intake by Individuals (CSFII), and residue levels at proposed tolerance levels.

i. *Food — a. Acute dietary exposure.* The acute population adjusted dose (aPAD) of 0.25 mg/kg bw/day (acute NOAEL with a 100-fold uncertainty factor) was used to assess dietary exposure. Arvesta Corporation has conducted an acute dietary exposure Tier 1 analysis with DEEM™ using the proposed tolerances for grapes, raisins, and potatoes of 0.5, 1.0, and 0.1 ppm, respectively, 100% crop treated and default processing factors for the overall US population and the following subpopulations: All infants (<1 year), children (1–2 years), females (13–49 years), and adults (50+). Arvesta has conducted an acute Tier 1 analysis from the uses on grapes and potatoes. This analysis also includes the anticipated exposure to clothianidin resulting from both Bayer's seed treatment uses and uses of thiamethoxam, of which clothianidin is a major metabolite. The results of this Tier 1 analysis indicate that the highest exposure never exceeds 18.00% of the aPAD at the 95th percentile of exposure.

b. Chronic dietary exposure. The chronic population adjusted dose (cPAD) of 0.098 mg/kg bw/day (chronic NOEL with a 100–fold uncertainty factor) was used to assess chronic dietary exposure. Arvesta has conducted a chronic Tier 1 analysis, including the anticipated exposure to clothianidin resulting from Bayer's seed treatment uses and uses of thiamethoxam, and the results indicate that the highest exposure never exceeds 13.41% of the cPAD.

ii. *Drinking water*. For drinking water, the models screening concentration in ground water (SCI-GROW) (ground water) and the Food Quality Protection Act (FQPA) index reservoir screening tool (FIRST) (surface water), were selected to calculate the potential exposure of clothianidin in drinking water. Both short-term (acute) and long-term (chronic) exposures were estimated with respect to foliar and drip-irrigation uses for grapes and foliar and in-furrow uses for potatoes. The worst case drinking water estimated concentrations (DWEC) for these applications to grapes and potatoes were 15.1 parts per billion (ppb) for the acute and 0.5 ppb for the chronic using the FIRST model. The acute and chronic drinking water levels of comparison (DWLOC) were calculated for each of the population subgroups. The acute DWLOC for the most sensitive population subgroup, children 1–2 years, was calculated to be 2,050 ppb and the chronic DWLOC for this population subgroup is 849 ppb. The acute DWLOC for the U.S. population is 8,417 ppb and the chronic DWLOC is 3,350 ppb. The calculated acute and chronic DWLOCs for the U.S. population and children 1–2 years exceed the DWECs from the models.

2. *Non-dietary exposure*. Clothianidin is currently not registered for use on any residential non-food site. Therefore, residential exposure to clothianidin residues will be through dietary exposure only.

D. Cumulative Effects

There is no information available to indicate that toxic effects produced by clothianidin are cumulative with those of any other compound.

E. Safety Determination

1. *U.S. population*. Using the conservative exposure assumptions described above and based on the completeness of the toxicity data, it can be concluded that total food-only exposure to clothianidin from all

proposed crop uses will be less than 3.8% of the aPAD and less than 2.34% of the cPAD for the overall U.S. population. All evaluated population subgroups had an exposure of less than 18.00% of the aPAD and less than 13.41% of the cPAD. EPA generally has no concerns for exposures below 100% of the PAD, because the PAD represents the level at or below which daily aggregate exposure over a lifetime will not pose appreciable risks to human health. The DWLOCs exceed the DWECs as calculated by conservative models. There are no residential uses of clothianidin; therefore, aggregate exposure consists of food and drinking water exposures. Thus, it can be concluded that there is a reasonable certainty that no harm will result from aggregate exposure to clothianidin residues.

2. *Infants and children*. In assessing the potential for additional sensitivity of infants and children to residues of clothianidin, the data from developmental toxicity studies in both the rat and rabbit, a 2–generation reproduction study in rats and a developmental neurotoxicity study in rats have been considered.

The developmental toxicity studies evaluate potential adverse effects on the developing animal resulting from pesticide exposure of the mother during prenatal development. The reproduction study evaluates effects from exposure to the pesticide on the reproductive capability of mating animals through two generations, as well as any observed systemic toxicity.

The developmental neurotoxicity studies evaluate the neurobehavioral and neurotoxic effects on the developing animal resulting from the exposure of the mother. FFDCA section 408 provides that EPA may apply an additional uncertainty factor for infants and children based on the threshold effects to account for prenatal and postnatal effects and the completeness of the toxicity database. Based on the current toxicological data requirements, the toxicology database for clothianidin relative to prenatal and postnatal development is complete, including the developmental neurotoxicity study. None of the studies indicated the offspring to be more sensitive. All effects were secondary to severe maternal toxicity. The cPAD for clothianidin was calculated using the NOAEL of 9.8 mg/kg bw/day from the 2–generation rat reproduction study.

F. International Tolerances

No CODEX maximum residue levels (MRL's) have been established for residues of clothianidin on any crops at this time.

[FR Doc. 04–27004 Filed 12–7–04; 8:45 am]

BILLING CODE 6560–50–S

ENVIRONMENTAL PROTECTION AGENCY

[OPP–2004–0236; FRL–7689–3]

Ethoxyquin; Reregistration Eligibility Decision for Low Risk Pesticide; Notice of Availability

AGENCY: Environmental Protection Agency (EPA).

ACTION: Notice.

SUMMARY: This notice announces the availability of EPA's Reregistration Eligibility Decision (RED) for the pesticide ethoxyquin, and opens a public comment period on this document, related risk assessments, and other support documents. EPA has reviewed the low risk pesticide ethoxyquin through a modified, streamlined version of the public participation process that the Agency uses to involve the public in developing pesticide reregistration and tolerance reassessment decisions. Through these programs, EPA is ensuring that all pesticides meet current health and safety standards.

DATES: Comments, identified by docket identification (ID) number OPP–2004–0236, must be received on or before February 7, 2005.

ADDRESSES: Comments may be submitted electronically, by mail, or through hand delivery/courier. Follow the detailed instructions as provided in Unit I. of the **SUPPLEMENTARY INFORMATION**.

FOR FURTHER INFORMATION CONTACT: Tom Brennan, Special Review and Reregistration Division (7508C), Office of Pesticide Programs, Environmental Protection Agency, 1200 Pennsylvania Ave., NW., Washington, DC 20460–0001; telephone number: (703) 306–0540; fax number: (703) 308–7042; e-mail address:*brennan.thomas@epa.gov*.

SUPPLEMENTARY INFORMATION:

I. General Information

A. Does this Action Apply to Me?

This action is directed to the public in general, and may be of interest to a wide range of stakeholders including environmental, human health, and agricultural advocates; the chemical industry; pesticide users; and members of the public interested in the sale, distribution, or use of pesticides. Since others also may be interested, the Agency has not attempted to describe all the specific entities that may be affected by this action. If you have any questions regarding the applicability of this action to a particular entity, consult the person listed under **FOR FURTHER INFORMATION CONTACT**.

B. How Can I Get Copies of this Document and Other Related Information?

1. *Docket*. EPA has established an official public docket for this action under docket ID number OPP–2004–0236. The official public docket consists of the documents specifically referenced in this action, any public comments received, and other information related to this action. Although a part of the official docket, the public docket does not include Confidential Business Information (CBI) or other information whose disclosure is restricted by statute. The official public docket is the collection of materials that is available for public viewing at the Public Information and Records Integrity Branch (PIRIB), Rm. 119, Crystal Mall #2, 1801 S. Bell St., Arlington, VA. This docket facility is open from 8:30 a.m. to 4 p.m., Monday through Friday, excluding legal holidays. The docket telephone number is (703) 305–5805.

2. *Electronic access*. You may access this **Federal Register** document electronically through the EPA Internet under the ''**Federal Register**'' listings at *http://www.epa.gov/fedrgstr/*.

An electronic version of the public docket is available through EPA's electronic public docket and comment system, EPA Dockets. You may use EPA Dockets at *http://www.epa.gov/edocket/* to submit or view public comments, access the index listing of the contents of the official public docket, and to access those documents in the public docket that are available electronically. Once in the system, select ''search,'' then key in the appropriate docket ID number.

Certain types of information will not be placed in the EPA Dockets. Information claimed as CBI and other information whose disclosure is restricted by statute, which is not included in the official public docket, will not be available for public viewing in EPA's electronic public docket. EPA's policy is that copyrighted material will not be placed in EPA's electronic public docket but will be available only in printed, paper form in the official public docket. To the extent feasible, publicly available docket materials will be made available in EPA's electronic public docket. When a document is selected from the index list in EPA Dockets, the system will identify whether the

document is available for viewing in EPA's electronic public docket. Although not all docket materials may be available electronically, you may still access any of the publicly available docket materials through the docket facility identified in Unit I.B.1. EPA intends to work towards providing electronic access to all of the publicly available docket materials through EPA's electronic public docket.

For public commenters, it is important to note that EPA's policy is that public comments, whether submitted electronically or in paper, will be made available for public viewing in EPA's electronic public docket as EPA receives them and without change, unless the comment contains copyrighted material, CBI, or other information whose disclosure is restricted by statute. When EPA identifies a comment containing copyrighted material, EPA will provide a reference to that material in the version of the comment that is placed in EPA's electronic public docket. The entire printed comment, including the copyrighted material, will be available in the public docket.

Public comments submitted on computer disks that are mailed or delivered to the docket will be transferred to EPA's electronic public docket. Public comments that are mailed or delivered to the docket will be scanned and placed in EPA's electronic public docket. Where practical, physical objects will be photographed, and the photograph will be placed in EPA's electronic public docket along with a brief description written by the docket staff.

C. How and to Whom Do I Submit Comments?

You may submit comments electronically, by mail, or through hand delivery/courier. To ensure proper receipt by EPA, identify the appropriate docket ID number in the subject line on the first page of your comment. Please ensure that your comments are submitted within the specified comment period. Comments received after the close of the comment period will be marked ''late.'' EPA is not required to consider these late comments. If you wish to submit CBI or information that is otherwise protected by statute, please follow the instructions in Unit I.D. Do not use EPA Dockets or e-mail to submit CBI or information protected by statute.

1. *Electronically*. If you submit an electronic comment as prescribed in this unit, EPA recommends that you include your name, mailing address, and an e-mail address or other contact information in the body of your comment. Also include this contact information on the outside of any disk or CD ROM you submit, and in any cover letter accompanying the disk or CD ROM. This ensures that you can be identified as the submitter of the comment and allows EPA to contact you in case EPA cannot read your comment due to technical difficulties or needs further information on the substance of your comment. EPA's policy is that EPA will not edit your comment, and any identifying or contact information provided in the body of a comment will be included as part of the comment that is placed in the official public docket, and made available in EPA's electronic public docket. If EPA cannot read your comment due to technical difficulties and cannot contact you for clarification, EPA may not be able to consider your comment.

i. *EPA Dockets*. Your use of EPA's electronic public docket to submit comments to EPA electronically is EPA's preferred method for receiving comments. Go directly to EPA Dockets at *http://www.epa.gov/edocket/,* and follow the online instructions for submitting comments. Once in the system, select ''search,'' and then key in docket ID number OPP–2004–0236. The system is an ''anonymous access'' system, which means EPA will not know your identity, e-mail address, or other contact information unless you provide it in the body of your comment.

ii. *E-mail*. Comments may be sent by e-mail to *opp-docket@epa.gov*, Attention: Docket ID Number OPP–2004–0236. In contrast to EPA's electronic public docket, EPA's e-mail system is not an ''anonymous access'' system. If you send an e-mail comment directly to the docket without going through EPA's electronic public docket, EPA's e-mail system automatically captures your e-mail address. E-mail addresses that are automatically captured by EPA's e-mail system are included as part of the comment that is placed in the official public docket, and made available in EPA's electronic public docket.

iii. *Disk or CD ROM*. You may submit comments on a disk or CD ROM that you mail to the mailing address identified in Unit I.C.2. These electronic submissions will be accepted in WordPerfect or ASCII file format. Avoid the use of special characters and any form of encryption.

2. *By mail*. Send your comments to: Public Information and Records Integrity Branch (PIRIB) (7502C), Office of Pesticide Programs (OPP), Environmental Protection Agency, 1200 Pennsylvania Ave., NW., Washington, DC 20460–0001, Attention: Docket ID Number OPP–2004–0236.

3. *By hand delivery or courier*. Deliver your comments to: Public Information and Records Integrity Branch (PIRIB), Office of Pesticide Programs (OPP), Environmental Protection Agency, Rm. 119, Crystal Mall #2, 1801 S. Bell St., Arlington, VA, Attention: Docket ID Number OPP–2004–0236. Such deliveries are only accepted during the docket's normal hours of operation as identified in Unit I.B.1.

D. How Should I Submit CBI to the Agency?

Do not submit information that you consider to be CBI electronically through EPA's electronic public docket or by e-mail. You may claim information that you submit to EPA as CBI by marking any part or all of that information as CBI (if you submit CBI on disk or CD ROM, mark the outside of the disk or CD ROM as CBI and then identify electronically within the disk or CD ROM the specific information that is CBI). Information so marked will not be disclosed except in accordance with procedures set forth in 40 CFR part 2.

In addition to one complete version of the comment that includes any information claimed as CBI, a copy of the comment that does not contain the information claimed as CBI must be submitted for inclusion in the public docket and EPA's electronic public docket. If you submit the copy that does not contain CBI on disk or CD ROM, mark the outside of the disk or CD ROM clearly that it does not contain CBI. Information not marked as CBI will be included in the public docket and EPA's electronic public docket without prior notice. If you have any questions about CBI or the procedures for claiming CBI, please consult the person listed under **FOR FURTHER INFORMATION CONTACT**.

E. What Should I Consider as I Prepare My Comments for EPA?

You may find the following suggestions helpful for preparing your comments:

1. Explain your views as clearly as possible.

2. Describe any assumptions that you used.

3. Provide any technical information and/or data you used that support your views.

4. If you estimate potential burden or costs, explain how you arrived at your estimate.

5. Provide specific examples to illustrate your concerns.

6. Offer alternatives.

7. Make sure to submit your comments by the comment period deadline identified.

8. To ensure proper receipt by EPA, identify the appropriate docket ID number in the subject line on the first page of your response. It would also be helpful if you provided the name, date, and **Federal Register** citation related to your comments.

II. Background

A. What Action is the Agency Taking?

Under section 4 of the Federal Insecticide, Fungicide, and Rodenticide Act (FIFRA), EPA is reevaluating existing pesticides to ensure that they meet current scientific and regulatory standards. Using a modified, streamlined version of its public participation process, EPA has completed a RED for the low risk pesticide ethoxyquin, under section 4(g)(2)(A) of FIFRA. EPA has determined that the data base to support reregistration is substantially complete and that products containing ethoxyquin will be eligible for reregistration, provided the risks are mitigated either in the manner described in the RED or by another means that achieves equivalent risk reduction. Upon submission of any required product-specific data under section 4(g)(2)(B), and any necessary changes to the registration and labeling (either to address any concerns identified in the RED or as a result of product-specific data), EPA will make a final reregistration decision under section 4(g)(2)(C) for products containing ethoxyquin.

Ethoxyquin is registered for use as an antioxidant to control scald (browning) in pears. It can be applied post-harvest by spraying/drenching, paper wrapping, or a combination thereof. Currently only two formulation types are registered for this chemical, which include an emulsifiable concentrate (1 product) and an impregnated wrap (3 products).

EPA must review tolerances, and tolerance exemptions that were in effect when the Food Quality Protection Act (FQPA) was enacted in August 1996, to ensure that these existing pesticide residue limits for food, and feed commodities meet the safety standard established by the new law. Tolerances are considered reassessed once the safety finding has been made or a revocation occurs. EPA has reviewed and made the requisite safety finding for the ethoxyquin tolerances included in this notice.

EPA is applying the principles of public participation to all pesticides under going reregistration and tolerance reassessment. The Agency's Pesticide Tolerance Reassessment and Reregistration; Public Participation Process, published in the **Federal Register** of May 14, 2004 (69 FR 26819) (FRL–7357–9), explains that in conducting these programs, the Agency is tailoring its public participation process to be commensurate with the level of risk, extent of use, complexity of issues, and degree of public concern associated with each pesticide. EPA can expeditiously reach decisions for pesticides like ethoxyquin, which pose few risk concerns, have low use, affect few if any stakeholders, and require little risk mitigation. Once EPA assesses uses and risks for such pesticides, the Agency may go directly to a decision and prepare a document summarizing its findings. The Agency, therefore is issuing the low-risk ethoxyquin RED, risk assessments, and related documents simultaneously for public comment.

The reregistration program is being conducted under congressionally mandated time frames, and EPA recognizes the need to make timely decisions, and to involve the public in finding ways to effectively mitigate pesticide risks. Ethoxyquin, however, poses few risks that require mitigation. The Agency, therefore is issuing the ethoxyquin RED, its risk assessments, and related support materials simultaneously for public comment. The comment period is intended to provide an opportunity for public input and a mechanism for initiating any necessary amendments to the RED. All comments should be submitted using the methods in Unit I.C. and must be received by EPA on or before the closing date. These comments will become part of the EPA Docket for ethoxyquin. Comments received after the close of the comment period will be marked ''late.'' EPA is not required to consider these late comments.

EPA will carefully consider all comments received by the closing date and will provide a response to comments memorandum in the Docket and electronic EDocket. If any comment significantly affects the document, EPA also will publish an amendment to the RED in the **Federal Register**. In the absence of substantive comments requiring changes, the ethoxyquin RED will be implemented as it is now presented.

B. What is the Agency's Authority for Taking this Action?

Section 4(g)(2) of FIFRA as amended directs that, after submission of all data concerning a pesticide active ingredient, ''the Administrator shall determine whether pesticides containing such active ingredient are eligible for reregistration,'' before calling in product-specific data on individual end-use products and either reregistering products or taking other ''appropriate regulatory action.''

Section 408(q) of the Federal Food, Drug, and Cosmetic Act (FFDCA), 21 U.S.C. 346a(q), requires EPA to review tolerances and exemptions for pesticide residues in effect as of August 2, 1996, to determine whether the tolerance or exemption meets the requirements of section 408(b)(2) or (c)(2) of FFDCA. This review is to be completed by August 3, 2006.

List of Subjects

Environmental protection, Pesticides and pests.

Dated: December 2, 2004.

Peter Caulkins,

Acting Director, Special Review and Reregistration Division, Office of Pesticide Programs.

[FR Doc. 04–27003 Filed 12–7–04; 8:45 am]

BILLING CODE 6560–50–S

ENVIRONMENTAL PROTECTION AGENCY

[OPP–2004–0365; FRL–7688–3]

Tributyltin Methacrylate; Notice of Receipt of Request to Voluntarily Cancel a Pesticide Registration

AGENCY: Environmental Protection Agency (EPA).

ACTION: Notice.

SUMMARY: In accordance with section 6(f)(1) of the Federal Insecticide, Fungicide, and Rodenticide Act (FIFRA), as amended, EPA is issuing a notice of receipt of a request by New Nautical Coatings, Inc. to voluntarily cancel its pesticide registration for an antifouling product containing tributyltin methacrylate. This is the last tributyltin methacrylate product registered for use in the U.S. EPA intends to grant this request at the close of the comment period for this announcement unless the Agency receives substantive comments within the comment period that would merit its further review of this request. Upon acceptance of this request, any sale, distribution, or use of product listed in this notice will be permitted only if such sale, distribution, or use is consistent with the terms as described in the final order.

DATES: Comments, identified by the docket ID number OPP–2004–0365, must be received on or before January 7, 2005.

ADDRESSES: Comments may be submitted electronically, by mail, or through hand delivery/courier. Follow the detailed instructions as provided in Unit I. of the **SUPPLEMENTARY INFORMATION**.

FOR FURTHER INFORMATION CONTACT: Jill Bloom, Special Review and Reregistration Division (7508C), Office of Pesticide Programs, Environmental Protection Agency, 1200 Pennsylvania Ave., NW., Washington, DC 20460–0001; telephone number: (703) 308–8019; e-mail address: *bloom.jill@epa.gov*.

SUPPLEMENTARY INFORMATION:

I. General Information

A. Does this Action Apply to Me?

This action is directed to the public in general, and may be of interest to a wide range of stakeholders including environmental, human health, and agricultural advocates; the chemical industry; pesticide users; and members of the public interested in the sale, distribution, or use of pesticides. Since others also may be interested, the Agency has not attempted to describe all the specific entities that may be affected by this action. If you have any questions regarding the applicability of this action to a particular entity, consult the person listed under **FOR FURTHER INFORMATION CONTACT**.

B. How Can I Get Copies of this Document and Other Related Information?

1. *Docket*. EPA has established an official public docket for this action under docket identification (ID) number OPP–2004–0365. The official public docket consists of the document specifically referenced in this action, any public comments received, and other information related to this action. Although a part of the official docket, the public docket does not include Confidential Business Information (CBI) or other information whose disclosure is restricted by statute. The official public docket is the collection of materials that is available for public viewing at the Public Information and Records Integrity Branch (PIRIB), Rm. 119, Crystal Mall #2, 1801 S. Bell St., Arlington, VA. This docket facility is open from 8:30 a.m. to 4 p.m., Monday through Friday, excluding legal holidays. The docket telephone number is (703) 305–5805.

2. *Electronic access*. You may access this **Federal Register** document electronically through the EPA Internet under the ''**Federal Register**'' listings at *http://www.epa.gov/fedrgstr/*.

An electronic version of the public docket is available through EPA's electronic public docket and comment system, EPA Dockets. You may use EPA Dockets at *http://www.epa.gov/edocket/* to submit or view public comments, access the index listing of the contents of the official public docket, and to access those documents in the public docket that are available electronically. Once in the system, select ''search,'' then key in the appropriate docket ID number.

Certain types of information will not be placed in the EPA Dockets. Information claimed as CBI and other information whose disclosure is restricted by statute, which is not included in the official public docket, will not be available for public viewing in EPA's electronic public docket. EPA's policy is that copyrighted material will not be placed in EPA's electronic public docket but will be available only in printed, paper form in the official public docket. To the extent feasible, publicly available docket materials will be made available in EPA's electronic public docket. When a document is selected from the index list in EPA Dockets, the system will identify whether the document is available for viewing in EPA's electronic public docket. Although not all docket materials may be available electronically, you may still access any of the publicly available docket materials through the docket facility identified in Unit I.B.1. EPA intends to work towards providing electronic access to all of the publicly available docket materials through EPA's electronic public docket.

For public commenters, it is important to note that EPA's policy is that public comments, whether submitted electronically or in paper, will be made available for public viewing in EPA's electronic public docket as EPA receives them and without change, unless the comment contains copyrighted material, CBI, or other information whose disclosure is restricted by statute. When EPA identifies a comment containing copyrighted material, EPA will provide a reference to that material in the version of the comment that is placed in EPA's electronic public docket. The entire printed comment, including the copyrighted material, will be available in the public docket.

Public comments submitted on computer disks that are mailed or delivered to the docket will be transferred to EPA's electronic public docket. Public comments that are mailed or delivered to the docket will be scanned and placed in EPA's electronic public docket. Where practical, physical objects will be photographed, and the photograph will be placed in EPA's electronic public docket along with a brief description written by the docket staff.

C. How and to Whom Do I Submit Comments?

You may submit comments electronically, by mail, or through hand delivery or courier. To ensure proper receipt by EPA, identify the appropriate docket ID number in the subject line on the first page of your comment. Please ensure that your comments are submitted within the specified comment period. Comments received after the close of the comment period will be marked ''late.'' EPA is not required to consider these late comments. If you wish to submit CBI or information that is otherwise protected by statute, please follow the instructions in Unit I.D. Do not use EPA Dockets or e-mail to submit CBI or information protected by statute.

1. *Electronically*. If you submit an electronic comment as prescribed in this unit, EPA recommends that you include your name, mailing address, and an e-mail address or other contact information in the body of your comment. Also include this contact information on the outside of any disk or CD ROM you submit, and in any cover letter accompanying the disk or CD ROM. This ensures that you can be identified as the submitter of the comment and allows EPA to contact you in case EPA cannot read your comment due to technical difficulties or needs further information on the substance of your comment. EPA's policy is that EPA will not edit your comment, and any identifying or contact information provided in the body of a comment will be included as part of the comment that is placed in the official public docket, and made available in EPA's electronic public docket. If EPA cannot read your comment due to technical difficulties and cannot contact you for clarification, EPA may not be able to consider your comment.

i. *EPA Dockets*. Your use of EPA's electronic public docket to submit comments to EPA electronically is EPA's preferred method for receiving comments. Go directly to EPA Dockets at*http://www.epa.gov/edocket/*, and follow the online instructions for submitting comments. Once in the system, select ''search,'' and then key in docket ID number OPP–2004–0365. The system is an ''anonymous access'' system, which means EPA will not know your identity, e-mail address, or other contact information unless you provide it in the body of your comment.

ii. *E-mail*. Comments may be sent by e-mail to*opp-docket@epa.gov*, Attention: Docket ID Number OPP–2004–0365. In contrast to EPA's electronic public docket, EPA's e-mail system is not an ''anonymous access'' system. If you send an e-mail comment directly to the docket without going through EPA's electronic public docket, EPA's e-mail system automatically captures your e-mail address. E-mail addresses that are automatically captured by EPA's e-mail system are included as part of the comment that is placed in the official public docket, and made available in EPA's electronic public docket.

iii. *Disk or CD ROM*. You may submit comments on a disk or CD ROM that you mail to the mailing address identified in Unit I.C.2. These electronic submissions will be accepted in WordPerfect or ASCII file format. Avoid the use of special characters and any form of encryption.

2. *By mail*. Send your comments to: Public Information and Records Integrity Branch (PIRIB) (7502C), Office of Pesticide Programs (OPP), Environmental Protection Agency, 1200 Pennsylvania Ave., NW., Washington, DC 20460–0001, Attention: Docket ID Number OPP–2004–0365.

3. *By hand delivery or courier*. Deliver your comments to: Public Information and Records Integrity Branch (PIRIB), Office of Pesticide Programs (OPP), Environmental Protection Agency, Rm. 119, Crystal Mall #2, 1801 S. Bell St., Arlington, VA, Attention: Docket ID Number OPP–2004–0365. Such deliveries are only accepted during the docket's normal hours of operation as identified in Unit I.B.1.

D. How Should I Submit CBI to the Agency?

Do not submit information that you consider to be CBI electronically through EPA's electronic public docket or by e-mail. You may claim information that you submit to EPA as CBI by marking any part or all of that information as CBI (if you submit CBI on disk or CD ROM, mark the outside of the disk or CD ROM as CBI and then identify electronically within the disk or CD ROM the specific information that is CBI). Information so marked will not be disclosed except in accordance with procedures set forth in 40 CFR part 2.

In addition to one complete version of the comment that includes any information claimed as CBI, a copy of the comment that does not contain the information claimed as CBI must be submitted for inclusion in the public docket and EPA's electronic public docket. If you submit the copy that does not contain CBI on disk or CD ROM, mark the outside of the disk or CD ROM clearly that it does not contain CBI. Information not marked as CBI will be included in the public docket and EPA's electronic public docket without prior notice. If you have any questions about CBI or the procedures for claiming CBI, please consult the person listed under **FOR FURTHER INFORMATION CONTACT**.

E. What Should I Consider as I Prepare My Comments for EPA?

You may find the following suggestions helpful for preparing your comments:

1. Explain your views as clearly as possible.
2. Describe any assumptions that you used.
3. Provide any technical information and/or data you used that support your views.
4. If you estimate potential burden or costs, explain how you arrived at your estimate.
5. Provide specific examples to illustrate your concerns.
6. Offer alternatives.
7. Make sure to submit your comments by the comment period deadline.
8. To ensure proper receipt by EPA, be sure to identify the docket ID number in the subject line on the first page of your response. It would also be helpful if you provided the name, date, and **Federal Register** citation related to your comments.

II. Background on the Receipt of Request to Cancel

This notice announces receipt by EPA of a request from New Nautical Coatings, Inc. to cancel a tributyltin methacrylate product registration. This product is registered as an antifouling paint for use on ship and boat hulls to deter the growth of fouling organisms. New Nautical Coatings, Inc. requested the voluntary cancellation of its EPA Registration Number 44891–6 in a letter to the Agency dated September 28, 2004, and further requested that it be allowed to continue to sell its product with this registration number for an 18–month period. Subsequently, on October 28, 2004, New Nautical Coatings, Inc. replaced the earlier letter with a new letter in which it requested the voluntary cancellation of EPA Registration Number 44891–6 with an existing stocks provision to end as of January 1, 2006. This product is the final remaining tributyltin antifouling paint registration. After the Agency's action on this request for voluntary cancellation, all U.S. tributyltin antifouling paint registrations will have been terminated.

III. What Action is the Agency Taking?

This notice announces receipt by EPA of a request from a registrant to cancel a tributyltin methacrylate product registration. The affected product and the registrant making the request are identified in Tables 1 and 2 of this unit.

Under section 6(f)(1)(A) of FIFRA, registrants may request, at any time, that their pesticide registrations be canceled or amended to terminate one or more pesticide uses. Section 6(f)(1)(B) of FIFRA requires that before acting on a request for voluntary cancellation, EPA must provide a 30–day public comment period on the request for voluntary cancellation or use termination. In addition, section 6(f)(1)(C) of FIFRA requires that EPA provide a 180–day comment period on a request for voluntary cancellation or termination of any minor agricultural use before granting the request, unless:

1. The registrants request a waiver of the 180–day comment period, or
2. The Administrator determines that continued use of the pesticide would pose an unreasonable adverse effect on the environment.

New Nautical Coatings, Inc. has requested that EPA waive the 180–day comment period. EPA will provide a 30–day comment period on the proposed request. New Nautical Coatings, Inc. has also made its request irrevocable. Unless the Agency determines that there are substantive comments that warrant further review of this request, an order will be issued canceling the affected registration after the close of the 30–day public comment period.

TABLE 1.—PRODUCT REGISTRATION WITH PENDING REQUEST FOR CANCELLATION

EPA Registration No.	Product Name	Company
44891–6	Sea Hawk Biocop Antifouling Coating	New Nautical Coatings, Inc.

TABLE 2.—REGISTRANT REQUESTING VOLUNTARY CANCELLATION

EPA Company No.	Company Name and Address
44891	New Nautical Coatings, Inc., 14805 49th Street, North Clearwater, FL 33762

IV. What is the Agency's Authority for Taking this Action?

Section 6(f)(1) of FIFRA provides that a registrant of a pesticide product may at any time request that any of its pesticide registrations be canceled or amended to terminate one or more uses. FIFRA further provides that, before acting on the request, EPA must publish a notice of receipt of any such request in the **Federal Register**. Thereafter, following the public comment period, the Administrator may approve such a request.

V. Provisions for Disposition of Existing Stocks

Existing stocks are those stocks of registered pesticide products which are currently in the United States and which were packaged, labeled, and released for shipment prior to the effective date of the cancellation action.

In any order issued in response to this request for cancellation of a product registration, EPA proposes to include the following provisions for the treatment of any existing stocks of the product identified in Table 1. New Nautical Coatings, Inc. will be permitted to sell or distribute existing stocks of its product, EPA Registration Number 44891–6, through December 31, 2005.

If the request for voluntary cancellation is granted, the Agency intends to issue a cancellation order that will allow persons other than the registrant to continue to sell and/or use existing stocks of canceled products until such stocks are exhausted, provided that such use is consistent with the terms of the previously approved labeling on, or that accompanied, the canceled product. The order will specifically prohibit any use of existing stocks that is not consistent with such previously approved labeling. If, as the Agency currently intends, the final cancellation order contains the existing stocks provision just described, the order will be sent only to the affected registrant of the canceled products. If the Agency determines that the final cancellation order should contain existing stocks provisions different than the ones just described, the Agency will publish the cancellation order in the **Federal Register**.

List of Subjects

Environmental protection, Pesticides and pests.

Dated: November 17, 2004.

Debra Edwards,

Director, Special Review and Reregistration Division, Office of Pesticide Programs.

[FR Doc. 04–26730 Filed 12–7–04; 8:45 am]

BILLING CODE 6560–50–S

ENVIRONMENTAL PROTECTION AGENCY

[OPP–2004–0398; FRL–7689–1]

Flumioxazin; Notice of Filing a Pesticide Petition to Establish aTolerance for a Certain Pesticide Chemical in or on Food

AGENCY: Environmental Protection Agency (EPA).

ACTION: Notice.

SUMMARY: This notice announces the initial filing of apesticide petition proposing the establishment of regulations for residuesof a certain pesticide chemical in or on various foodcommodities.

DATES: Comments, identified by docket identification(ID) number OPP–2004–0398, must be received on or before January 7, 2005.

ADDRESSES: Comments may be submitted electronically, bymail, or through hand delivery/courier. Follow the detailed instructionsas provided in Unit I. of the **SUPPLEMENTARYINFORMATION.**

FOR FURTHER INFORMATION CONTACT: Joanne I. Miller,Registration Division (7505C), Office of Pesticide Programs, EnvironmentalProtection Agency, 1200 Pennsylvania Ave., NW.,Washington, DC20460–0001; telephone number: (703) 305–6224; e-mail address:*miller.joanne@epamail.epa.gov*.

SUPPLEMENTARY INFORMATION:

I. General Information

A. Does this Action Apply to Me?

You may be potentially affected by this action if you are anagricultural producer, food manufacturer, or pesticide manufacturer.Potentially affected entities may include, but are not limited to:

- Crop production (NAICS 111)
- Animal production (NAICS 112)
- Food manufacturing (NAICS 311)
- Pesticide manufacturing (NAICS 32532)

This listing is not intended to be exhaustive, but rather providesa guide for readers regarding entities likely to be affected by thisaction. Other types of entities not listed in this unit could also beaffected. The North American Industrial Classification System (NAICS) codeshave been provided to assist you and others in determining whether thisaction might apply to certain entities. If you have any questions regardingthe applicability of this action to a particular entity, consult the personlisted under **FOR FURTHER INFORMATION CONTACT.**

B. How Can I Get Copies of this Document and Other RelatedInformation?

1. *Docket.* EPA has established an official publicdocket for this action under docket ID number OPP–2004–0398.The official public docket consists of the documents specificallyreferenced in this action, any public comments received, and otherinformation related to this action. Although, a part of the officialdocket, the public docket does not include Confidential BusinessInformation (CBI) or other information whose disclosure is restricted bystatute. The official public docket is the collection of materials that isavailable for public viewing at the Public Information and RecordsIntegrity Branch (PIRIB), Rm. 119, Crystal Mall #2, 1801 S. BellSt., Arlington, VA. This docket facility is open from 8:30 a.m. to 4 p.m.,Monday through Friday, excluding legal holidays. The docket telephonenumber is (703) 305–5805.

2. *Electronic access.* You may access this **Federal Register** document electronically through the EPA Internet under the ''**Federal Register**'' listings at *http://www.epa.gov/fedrgstr/*.

An electronic version of the public docket is available through EPA's electronic public docket and comment system, EPA Dockets. You may use EPA Dockets at *http://www.epa.gov/edocket/* to submit or view public comments, access the index listing of the contents of the official public docket, and to access those documents in the public docket that are available electronically. Although, not all docket materials may be available electronically, you may still access any of the publicly available docket materials through the docket facility identified in Unit I.B.1. Once in the system, select ''search,'' then key in the appropriate docket ID number.

Certain types of information will not be placed in the EPA Dockets. Information claimed as CBI and other information whose disclosure is restricted by statute, which is not included in the official public docket, will not be available for public viewing in EPA's electronic public docket. EPA's policy is that copyrighted material will not be placed in EPA's electronic public docket but will be available only in printed, paper form in the official public docket. To the extent feasible, publicly available docket materials will be made available in EPA's electronic public docket. When a document is selected from the index list in EPA Dockets, the system will identify whether the document is available for viewing in EPA's electronic public docket. Although, not all docket materials may

be available electronically, you may still access any of the publicly available docket materials through the docket facility identified in Unit I.B. EPA intends to work towards providing electronic access to all of the publicly available docket materials through EPA's electronic public docket.

For public commenters, it is important to note that EPA's policy is that public comments, whether submitted electronically or on paper, will be made available for public viewing in EPA's electronic public docket as EPA receives them and without change, unless the comment contains copyrighted material, CBI, or other information whose disclosure is restricted by statute. When EPA identifies a comment containing copyrighted material, EPA will provide a reference to that material in the version of the comment that is placed in EPA's electronic public docket. The entire printed comment, including the copyrighted material, will be available in the public docket.

Public comments submitted on computer disks that are mailed or delivered to the docket will be transferred to EPA's electronic public docket. Public comments that are mailed or delivered to the docket will be scanned and placed in EPA's electronic public docket. Where practical, physical objects will be photographed, and the photograph will be placed in EPA's electronic public docket along with a brief description written by the docket staff.

C. How and to Whom Do I Submit Comments?

You may submit comments electronically, by mail, or through hand delivery/courier. To ensure proper receipt by EPA, identify the appropriate docket ID number in the subject line on the first page of your comment. Please ensure that your comments are submitted within the specified comment period. Comments received after the close of the comment period will be marked ''late.'' EPA is not required to consider these late comments. If you wish to submit CBI or information that is otherwise protected by statute, please follow the instructions in Unit I.D. Do not use EPA Dockets or e-mail to submit CBI or information protected by statute.

1. *Electronically*. If you submit an electronic comment as prescribed in this unit, EPA recommends that you include your name, mailing address, and an e-mail address or other contact information in the body of your comment. Also, include this contact information on the outside of any disk or CD ROM you submit, and in any cover letter accompanying the disk or CD ROM. This ensures that you can be identified as the submitter of the comment and allows EPA to contact you in case EPA cannot read your comment due to technical difficulties or needs further information on the substance of your comment. EPA's policy is that EPA will not edit your comment, and any identifying or contact information provided in the body of a comment will be included as part of the comment that is placed in the official public docket, and made available in EPA's electronic public docket. If EPA cannot read your comment due to technical difficulties and cannot contact you for clarification, EPA may not be able to consider your comment.

i. *EPA Dockets*. Your use of EPA's electronic public docket to submit comments to EPA electronically is EPA's preferred method for receiving comments. Go directly to EPA Dockets at *http://www.epa.gov/edocket/*, and follow the online instructions for submitting comments. Once in the system, select ''search,'' and then key in docket ID number OPP–2004–0398. The system is an ''anonymous access'' system, which means EPA will not know your identity, e-mail address, or other contact information unless you provide it in the body of your comment.

ii. *E-mail*. Comments may be sent by e-mail to *opp-docket@epa.gov*, Attention: Docket ID number OPP–2004–0398. In contrast to EPA's electronic public docket, EPA's e-mail system is not an ''anonymous access'' system. If you send an e-mail comment directly to the docket without going through EPA's electronic public docket, EPA's e-mail system automatically captures your e-mail address. E-mail addresses that are automatically captured by EPA's e-mail system are included as part of the comment that is placed in the official public docket, and made available in EPA's electronic public docket.

iii. *Disk or CD ROM*. You may submit comments on a disk or CD ROM that you mail to the mailing address identified in Unit I.C.2. These electronic submissions will be accepted in WordPerfect or ASCII file format. Avoid the use of special characters and any form of encryption.

2. *By mail*. Send your comments to: Public Information and Records Integrity Branch (PIRIB) (7502C), Office of Pesticide Programs (OPP), Environmental Protection Agency, 1200 Pennsylvania Ave., NW., Washington, DC 20460–0001, Attention: Docket ID number OPP–2004–0398.

3. *By hand delivery or courier*. Deliver your comments to: Public Information and Records Integrity Branch (PIRIB), Office of Pesticide Programs (OPP), Environmental Protection Agency, Rm. 119, Crystal Mall #2, 1801 S. Bell St., Arlington, VA, Attention: Docket ID number OPP–2004–0398. Such deliveries are only accepted during the docket's normal hours of operation as identified in Unit I.B.1.

D. How Should I Submit CBI to the Agency?

Do not submit information that you consider to be CBI electronically through EPA's electronic public docket or by e-mail. You may claim information that you submit to EPA as CBI by marking any part or all of that information as CBI (if you submit CBI on disk or CD ROM, mark the outside of the disk or CD ROM as CBI and then identify electronically within the disk or CD ROM the specific information that is CBI). Information so marked will not be disclosed except in accordance with procedures set forth in 40 CFR part 2.

In addition to one complete version of the comment that includes any information claimed as CBI, a copy of the comment that does not contain the information claimed as CBI must be submitted for inclusion in the public docket and EPA's electronic public docket. If you submit the copy that does not contain CBI on disk or CD ROM, mark the outside of the disk or CD ROM clearly that it does not contain CBI. Information not marked as CBI will be included in the public docket and EPA's electronic public docket without prior notice. If you have any questions about CBI or the procedures for claiming CBI, please consult the person listed under **FOR FURTHER INFORMATION CONTACT**.

E. What Should I Consider as I Prepare My Comments for EPA?

You may find the following suggestions helpful for preparing your comments:

1. Explain your views as clearly as possible.
2. Describe any assumptions that you used.
3. Provide copies of any technical information and/or data you used that support your views.
4. If you estimate potential burden or costs, explain how you arrived at the estimate that you provide.
5. Provide specific examples to illustrate your concerns.
6. Make sure to submit your comments by the deadline in this notice.
7. To ensure proper receipt by EPA, be sure to identify the docket ID number assigned to this action in the subject line on the first page of your response.

You may also provide the name, date, and **Federal Register** citation.

II. What Action is the Agency Taking?

EPA has received a pesticide petition as follows proposing the establishment and/or amendment of regulations for residues of a certain pesticide chemical in or on various food commodities under section 408 of the Federal Food, Drug, and Cosmetic Act (FFDCA), 21 U.S.C. 346a. EPA has determined that this petition contains data or information regarding the elements set forth in FFDCA section 408(d)(2); however, EPA has not fully evaluated the sufficiency of the submitted data at this time or whether the data support granting of the petition. Additional data may be needed before EPA rules on the petition.

List of Subjects

Environmental protection, Agricultural commodities, Feed additives, Food additives, Pesticides and pests, Reporting and recordkeeping requirements.

Dated: November 24, 2004.

Lois Rossi,

Director, Registration Division, Office of Pesticide Programs.

Summary of Petition

The petitioner's summary of the pesticide petition is printed below as required by FFDCA section 408(d)(3). The summary of the petition was prepared by Valent U.S.A. Corporation and represents the view of the petitioner. The petition summary announces the availability of a description of the analytical methods available to EPA for the detection and measurement of the pesticide chemical residues or an explanation of why no such method is needed.

Valent U.S.A. Corportion

PP 4F6829

EPA has received a pesticide petition (4F6829) from Valent U.S.A. Corporation, 1600 Riviera Ave., Suite 200, Walnut Creek, CA 94596, proposing, pursuant to section 408(d) of the Federal Food, Drug, and Cosmetic Act (FFDCA), 21 U.S.C. 346a(d), to amend 40 CFR part 180, by establishing a tolerance for residues of the herbicide chemical flumioxazin, 2-[7-fluoro-3,4-dihydro-3-oxo-4-(2-propynyl)-2H-1,4-benzoxazin-6-yl]-4,5,6,7-tetrahydro-1H-isoindole-1,3(2H)-dione, in or on the following raw agricultural commodities: Fruit, pome (Crop Group 11) at 0.02 parts per million (ppm) and fruit, stone (Crop Group 12) at 0.02 ppm. EPA has determined that the petition contains data or information regarding the elements set forth in section 408(d)(2) of the FFDCA; however, EPA has not fully evaluated the sufficiency of the submitted data at this time or whether the data support granting of the petition. Additional data may be needed before EPA rules on the petition.

A. Residue Chemistry

1. *Plant metabolism*. The metabolism of flumioxazin is adequately understood for the purpose of the proposed tolerances.

2. *Analytical method*. Practical analytical methods for detecting and measuring levels of flumioxazin have been developed and validated in or on all appropriate agricultural commodities and respective processing fractions. The limit of quantitation (LOQ) of flumioxazin in the methods is 0.02 ppm which will allow monitoring of food with residues at the levels proposed for the tolerances.

3. *Magnitude of residues*. Residue data on apples, pears, plums, peaches, and cherries (sweet and tart) have been submitted which adequately support the requested tolerances. Processing studies were conducted with apples and plums. No residues of flumioxazin were detected in any of the raw agricultural commodities or processing commodities collected from these studies even when orchards were treated at an exaggerated (2x) rate. No tolerances are proposed for apple or plum processing commodities.

B. Toxicological Profile

The toxicological profile for flumioxazin which supports this petition for tolerances was previously published in the **Federal Register** of April 18, 2001 (66 FR 19870) (FRL–6778–5).

C. Aggregate Exposure

1. *Dietary exposure*. Acute and chronic dietary analyses were conducted to estimate exposure to potential flumioxazin residues in or on the following crops: Peanuts and soybeans (existing tolerances); cotton, grapes, almond, pistachio, and sugarcane, vegetable, tuberous and corm (Subgroup 1C), onion, dry bulb and mint (tolerances pending); nut, tree (Group 14), (tolerances to be proposed in the future); and fruit, pome (Group 11) and fruit, stone (Group 12) (tolerances proposed in the current petition). The Cumulative and Aggregate Risk Evaluation System (CARES) Version 1.1 was used to conduct this assessment. Proposed tolerances and conservative estimates for percentages of the percent crop treated were used in these assessments. No adjustments were made for common washing, cooking, or preparation practices. Exposure estimates for water were made based upon modeling Generic Expected Environmental Concentration (GENEEC 1.2).

i. *Food*—a. *Acute*. The acute dietary exposure estimate of flumioxazin residues in food at the 99.9th percentile was calculated to be, at most, 26.3% of the acute reference dose (aRfD) with a margin of exposure (MOE) of 3,797. The population subgroup with the highest exposure was children 1–2 years old. The aRfD was defined as the no observed adverse effect level (NOAEL) from an oral developmental study in rats and includes an uncertainty factor of 100 to account for intraspecies and interspecies variation and an additional 10–fold uncertainty factor for FQPA (NOAEL = 3 milligrams/kilogram body weight (mg/kg bwt/day), aRfD = 0.003 mg/kg/day).

b. *Chronic*. The chronic dietary exposure estimate of flumioxazin residues in food at the 100th percentile was calculated to be, at most, 2.5% of the chronic reference dose (cRfD) with a MOE of 40,000. The population subgroup with the highest exposure was the general U.S. population. The cRfD was defined as the NOAEL from a rat 2–year chronic/oncogenicity study and includes an uncertainty factor of 100 to account for intraspecies and interspecies variation and an additional 10–fold uncertainty factor for Food Quality Protection Act (FQPA) (NOAEL = 2 mg/kg bwt/day, cRfD = 0.002 mg/kg/day).

ii. *Drinking water*. Since flumioxazin is applied outdoors to growing agricultural crops, the potential exists for the parent or its metabolites to reach ground water or surface water that may be used for drinking water. Because of the physical properties of flumioxazin, it is unlikely that flumioxazin or its metabolites can leach to potable ground water. To quantify potential exposure from drinking water, surface water concentrations for flumioxazin were estimated using GENEEC 1.2. Because KOC could not be measured directly in adsorption-desorption studies because of chemical stability, GENEEC values representative of a range of KOC values were modeled. The simulation that was selected for these exposure estimates used an average KOC of 385, indicating high mobility. The peak GENEEC concentration predicted in the simulated pond water was 9.8 parts per billion (ppb). Using standard assumptions about body weight and water consumption, the acute exposure from this drinking water would be 0.00028 and 0.00098 mg/kg/day for

adults and children, respectively. The 56–day GENEEC concentration predicted in the simulated pond water was 0.34 ppb. Chronic exposure from this drinking water would be 0.0000097 and 0.000034 mg/kg/day for adults and children, respectively; 1.7% of the chronic population adjusted dose (cPAD) of 0.002 mg/kg/day for children. Based on this worse case analysis, the contribution of drinking water to the dietary exposure is comparable to that from food, but the risk is still negligible.

2. *Non-dietary exposure*. Flumioxazin is proposed only for agricultural uses and no homeowner or turf uses. Thus, no non-dietary risk assessment is needed.

D. Cumulative Effects

Section 408(b)(2)(D)(v) requires that the Agency must consider ''available information'' concerning the cumulative effects of a particular pesticide's residues and ''other substances that have a common mechanism of toxicity.'' Available information in this context include not only toxicity, chemistry, and exposure data, but also scientific policies and methodologies for understanding common mechanisms of toxicity and conducting cumulative risk assessments. Although, the Agency has some information in its files that may turn out to be helpful in eventually determining whether a pesticide shares a common mechanism of toxicity with any other substances, EPA does not at this time have the methodologies to resolve the complex scientific issues concerning common mechanism of toxicity in a meaningful way for most registered pesticides.

E. Safety Determination

1. *U.S. population*—i. *Acute risk*. The potential acute exposure from food to the U.S. population and various non-child/infant population subgroups will utilize at most 14.2% of the aRfD. Addition of the worse case, dietary exposure from water (0.00028 mg/kg/day) increases this exposure at the 99.9th percentile to 23.7% of the aRfD. The Agency has no cause for concern if total acute residue contribution is less than 100% of the aRfD, because the RfD represents the level at or below which daily aggregate exposure over a lifetime will not pose appreciable risk to human health. Therefore, it can be concluded that there is a reasonable certainty that no harm will result to the overall U.S. population from aggregate, acute exposure to flumioxazin residues.

ii. *Chronic risk*. The potential chronic exposure from food to the U.S. population and various non-child/infant population subgroups will utilize at most 2.5% of the cRfD. Addition of the worse case, dietary exposure from water (0.0000097 mg/kg/day) increases this exposure at the 100th percentile to 3.0% of the cRfD. The Agency has no cause for concern if total chronic residue contribution is less than 100% of the cRfD, because the RfD represents the level at or below which daily aggregate exposure over a lifetime will not pose appreciable risk to human health. Therefore, it can be concluded that there is a reasonable certainty that no harm will result to the overall U.S. population from aggregate, chronic exposure to flumioxazin residues.

2. *Infants and children*—i. *Safety factor for infants and children*. The FQPA safety factor (as required by the Food Quality Protection Act of August 3, 1996) has been retained at 10x in assessing the risk posed by flumioxazin. The reasons for retaining the 10x safety factor are as follows. First, there is evidence of increased susceptibility of rat fetuses to *in utero* exposure to flumioxazin by the oral and dermal route in the prenatal developmental toxicity studies in rats. In addition, there is evidence of increased susceptibility of young animals exposed to flumioxazin in the 2-generation reproduction toxicity study in rats. Finally, there is concern for the severity of the effects observed in fetuses and young animals when compared to those observed in the maternal and parental animals. Since the additional 10x safety factor has been retained to account for the apparent increased susceptibility from prenatal or postnatal exposures to flumioxazin, it would be appropriate to apply the extra 10x safety factor to only selected subpopulations, e.g., infants and children <6 years old and females >13 years old. For these assessments, however, the 10x safety factor has been applied to all population subgroups for all exposure durations (acute and chronic), thus making these assessments additionally conservative.

ii. *Acute risk*. The potential acute exposure from food to children 1–2 years old (the most highly exposed child/infant subgroup) will utilize at most 26.3% of the aRfD. Addition of the worse case, dietary exposure from water (0.00098 mg/kg/day) increases this exposure at the 99.9th percentile to 59% of the aRfD. Therefore, it can be concluded that, there is a reasonable certainty that no harm will result to infants and children from aggregate, acute exposure to flumioxazin residues.

iii. *Chronic risk*. The potential chronic exposure from food to children 1–2 years old (the most highly exposed child/infant subgroup) will utilize at most 2.4% of the cRfD. Addition of the worse case, dietary exposure from water (0.000034 mg/kg/day) increases this exposure at the 100th percentile to 4.2% of the cRfD. Therefore, it can be concluded that there is a reasonable certainty that no harm will result to infants and children from aggregate, chronic exposure to flumioxazin residues.

F. *International Tolerances*.

Flumioxazin has not been evaluated by the joint meeting on pesticide residues (JMPR) and there are no codex Maximum Residue Limits (MRL) for flumioxazin. MRL values have been established to allow the following uses of flumioxazin in the following countries.

Country	Crop	MRL (ppm)
Argentina	Soybean Sunflower	0.015 0.02
Brazil	Soybean	0.05
France	Grape	0.05
Paraguay	Soybean	0.015
South Africa	Soybean Groundnut	0.02 0.02
Spain	Soybean Peanut	0.05 0.05

[FR Doc. 04–26819 Filed 12–7–04; 8:45 am]
BILLING CODE 6560–50–S

ENVIRONMENTAL PROTECTION AGENCY

[OPPT–2004–0129; FRL–7690–7]

Certain New Chemicals; Receipt and Status Information

AGENCY: Environmental Protection Agency (EPA).

ACTION: Notice.

SUMMARY: Section 5 of the Toxic Substances Control Act (TSCA) requires any person who intends to manufacture (defined by statute to include import) a new chemical (i.e., a chemical not on the TSCA Inventory) to notify EPA and comply with the statutory provisions pertaining to the manufacture of new chemicals. Under sections 5(d)(2) and 5(d)(3) of TSCA, EPA is required to publish a notice of receipt of a premanufacture notice (PMN) or an application for a test marketing exemption (TME), and to publish periodic status reports on the chemicals under review and the receipt of notices of commencement to manufacture those chemicals. This status report, which covers the period from October 18, 2004 to November 9, 2004, consists of the PMNs pending or expired, and the notices of commencement to manufacture a new chemical that the Agency has received under TSCA section 5 during this time period.

DATES: Comments identified by the docket ID number OPPT–2004–0129 and the specific PMN number or TME number, must be received on or before January 7, 2005.

ADDRESSES: Comments may be submitted electronically, by mail, or through hand delivery/courier. Follow the detailed instructions as provided in Unit I. of the **SUPPLEMENTARY INFORMATION**.

FOR FURTHER INFORMATION CONTACT: Colby Lintner, Regulatory Coordinator, Environmental Assistance Division, Office of Pollution Prevention and Toxics (7408M), Environmental Protection Agency, 1200 Pennsylvania Ave., NW., Washington, DC 20460–0001; telephone number: (202) 554–1404; e-mail address: *TSCA-Hotline@epa.gov*.

SUPPLEMENTARY INFORMATION:

I. General Information

A. Does this Action Apply to Me?

This action is directed to the public in general. As such, the Agency has not attempted to describe the specific entities that this action may apply to. Although others may be affected, this action applies directly to the submitter of the premanufacture notices addressed in the action. If you have any questions regarding the applicability of this action to a particular entity, consult the person listed under **FOR FURTHER INFORMATION CONTACT**.

B. How Can I Get Copies of this Document and Other Related Information?

1. *Docket.* EPA has established an official public docket for this action under docket identification (ID) number OPPT–2004–0129. The official public docket consists of the documents specifically referenced in this action, any public comments received, and other information related to this action. Although a part of the official docket, the public docket does not include Confidential Business Information (CBI) or other information whose disclosure is restricted by statute. The official public docket is the collection of materials that is available for public viewing at the EPA Docket Center, Rm. B102-Reading Room, EPA West, 1301 Constitution Ave., NW., Washington, DC. The EPA Docket Center is open from 8:30 a.m. to 4:30 p.m., Monday through Friday, excluding legal holidays. The EPA Docket Center Reading Room telephone number is (202) 566–1744 and the telephone number for the OPPT Docket, which is located in EPA Docket Center, is (202) 566–0280.

2. *Electronic access.* You may access this **Federal Register** document electronically through the EPA Internet under the ''**Federal Register**'' listings at *http://www.epa.gov/fedrgstr/*.

An electronic version of the public docket is available through EPA's electronic public docket and comment system, EPA Dockets. You may use EPA Dockets at *http://www.epa.gov/edocket/* to submit or view public comments, access the index listing of the contents of the official public docket, and to access those documents in the public docket that are available electronically. Although not all docket materials may be available electronically, you may still access any of the publicly available docket materials through the docket facility identified in Unit I.B.1. Once in the system, select ''search,'' then key in the appropriate docket ID number.

Certain types of information will not be placed in the EPA Dockets. Information claimed as CBI and other information whose disclosure is restricted by statute, which is not included in the official public docket, will not be available for public viewing in EPA's electronic public docket. EPA's policy is that copyrighted material will not be placed in EPA's electronic public docket but will be available only in printed, paper form in the official public docket. To the extent feasible, publicly available docket materials will be made available in EPA's electronic public docket. When a document is selected from the index list in EPA Dockets, the system will identify whether the document is available for viewing in EPA's electronic public docket. Although not all docket materials may be available electronically, you may still access any of the publicly available docket materials through the docket facility identified in Unit I.B.1. EPA intends to work towards providing electronic access to all of the publicly available docket materials through EPA's electronic public docket.

For public commenters, it is important to note that EPA's policy is that public comments, whether submitted electronically or in paper, will be made available for public viewing in EPA's electronic public docket as EPA receives them and without change, unless the comment contains copyrighted material, CBI, or other information whose disclosure is restricted by statute. When EPA identifies a comment containing copyrighted material, EPA will provide a reference to that material in the version of the comment that is placed in EPA's electronic public docket. The entire printed comment, including the copyrighted material, will be available in the public docket.

Public comments submitted on computer disks that are mailed or delivered to the docket will be transferred to EPA's electronic public docket. Public comments that are mailed or delivered to the docket will be scanned and placed in EPA's electronic public docket. Where practical, physical objects will be photographed, and the photograph will be placed in EPA's electronic public docket along with a brief description written by the docket staff.

C. How and To Whom Do I Submit Comments?

You may submit comments electronically, by mail, or through hand delivery/courier. To ensure proper receipt by EPA, identify the appropriate docket ID number and specific PMN number or TME number in the subject line on the first page of your comment. Please ensure that your comments are submitted within the specified comment period. Comments received after the close of the comment period will be marked ''late.'' EPA is not required to

consider these late comments. If you wish to submit CBI or information that is otherwise protected by statute, please follow the instructions in Unit I.D. Do not use EPA Dockets or e-mail to submit CBI or information protected by statute.

1. *Electronically*. If you submit an electronic comment as prescribed in this unit, EPA recommends that you include your name, mailing address, and an e-mail address or other contact information in the body of your comment. Also include this contact information on the outside of any disk or CD ROM you submit, and in any cover letter accompanying the disk or CD ROM. This ensures that you can be identified as the submitter of the comment and allows EPA to contact you in case EPA cannot read your comment due to technical difficulties or needs further information on the substance of your comment. EPA's policy is that EPA will not edit your comment, and any identifying or contact information provided in the body of a comment will be included as part of the comment that is placed in the official public docket, and made available in EPA's electronic public docket. If EPA cannot read your comment due to technical difficulties and cannot contact you for clarification, EPA may not be able to consider your comment.

i. *EPA Dockets*. Your use of EPA's electronic public docket to submit comments to EPA electronically is EPA's preferred method for receiving comments. Go directly to EPA Dockets at *http://www.epa.gov/edocket/*, and follow the online instructions for submitting comments. Once in the system, select ''search,'' and then key in docket ID number OPPT–2004–0129. The system is an ''anonymous access'' system, which means EPA will not know your identity, e-mail address, or other contact information unless you provide it in the body of your comment.

ii. *E-mail*. Comments may be sent by e-mail to *oppt.ncic@epa.gov*, Attention: Docket ID Number OPPT–2004–0129 and PMN Number or TME Number. In contrast to EPA's electronic public docket, EPA's e-mail system is not an ''anonymous access'' system. If you send an e-mail comment directly to the docket without going through EPA's electronic public docket, EPA's e-mail system automatically captures your e-mail address. E-mail addresses that are automatically captured by EPA's e-mail system are included as part of the comment that is placed in the official public docket, and made available in EPA's electronic public docket.

iii. *Disk or CD ROM*. You may submit comments on a disk or CD ROM that you mail to the mailing address identified in Unit I.C.2. These electronic submissions will be accepted in WordPerfect or ASCII file format. Avoid the use of special characters and any form of encryption.

2. *By mail*. Send your comments to: Document Control Office (7407M), Office of Pollution Prevention and Toxics (OPPT), Environmental Protection Agency, 1200 Pennsylvania Ave., NW., Washington, DC 20460–0001.

3. *By hand delivery or courier*. Deliver your comments to: OPPT Document Control Office (DCO) in EPA East Bldg., Rm. 6428, 1201 Constitution Ave., NW., Washington, DC. Attention: Docket ID Number OPPT–2004–0129 and PMN Number or TME Number. The DCO is open from 8 a.m. to 4 p.m., Monday through Friday, excluding legal holidays. The telephone number for the DCO is (202) 564–8930.

D. How Should I Submit CBI to the Agency?

Do not submit information that you consider to be CBI electronically through EPA's electronic public docket or by e-mail. You may claim information that you submit to EPA as CBI by marking any part or all of that information as CBI (if you submit CBI on disk or CD ROM, mark the outside of the disk or CD ROM as CBI and then identify electronically within the disk or CD ROM the specific information that is CBI). Information so marked will not be disclosed except in accordance with procedures set forth in 40 CFR part 2.

In addition to one complete version of the comment that includes any information claimed as CBI, a copy of the comment that does not contain the information claimed as CBI must be submitted for inclusion in the public docket and EPA's electronic public docket. If you submit the copy that does not contain CBI on disk or CD ROM, mark the outside of the disk or CD ROM clearly that it does not contain CBI. Information not marked as CBI will be included in the public docket and EPA's electronic public docket without prior notice. If you have any questions about CBI or the procedures for claiming CBI, please consult the technical person listed under **FOR FURTHER INFORMATION CONTACT**.

E. What Should I Consider as I Prepare My Comments for EPA?

You may find the following suggestions helpful for preparing your comments:

1. Explain your views as clearly as possible.
2. Describe any assumptions that you used.
3. Provide copies of any technical information and/or data you used that support your views.
4. If you estimate potential burden or costs, explain how you arrived at the estimate that you provide.
5. Provide specific examples to illustrate your concerns.
6. Offer alternative ways to improve the notice or collection activity.
7. Make sure to submit your comments by the deadline in this document.
8. To ensure proper receipt by EPA, be sure to identify the docket ID number assigned to this action and the specific PMN number you are commenting on in the subject line on the first page of your response. You may also provide the name, date, and **Federal Register** citation.

II. Why is EPA Taking this Action?

Section 5 of TSCA requires any person who intends to manufacture (defined by statute to include import) a new chemical (i.e., a chemical not on the TSCA Inventory to notify EPA and comply with the statutory provisions pertaining to the manufacture of new chemicals. Under sections 5(d)(2) and 5(d)(3) of TSCA, EPA is required to publish a notice of receipt of a PMN or an application for a TME and to publish periodic status reports on the chemicals under review and the receipt of notices of commencement to manufacture those chemicals. This status report, which covers the period from October 18, 2004 to November 9, 2004, consists of the PMNs pending or expired, and the notices of commencement to manufacture a new chemical that the Agency has received under TSCA section 5 during this time period.

III. Receipt and Status Report for PMNs

This status report identifies the PMNs pending or expired, and the notices of commencement to manufacture a new chemical that the Agency has received under TSCA section 5 during this time period. If you are interested in information that is not included in the following tables, you may contact EPA as described in Unit II. to access additional non-CBI information that may be available.

In Table I of this unit, EPA provides the following information (to the extent that such information is not claimed as CBI) on the PMNs received by EPA during this period: the EPA case number assigned to the PMN; the date the PMN was received by EPA; the projected end date for EPA's review of the PMN; the submitting manufacturer; the potential uses identified by the manufacturer in the PMN; and the chemical identity.

I. 80 PREMANUFACTURE NOTICES RECEIVED FROM: 10/18/04 TO 11/09/04

Case No.	Received Date	Projected Notice End Date	Manufacturer/Importer	Use	Chemical
P–05–0042	10/19/04	01/16/05	CBI	(S) Polymerization initiator for polyol production	(S) 1,1,3,3-tetramethylbutyl peroxy-2-ethylhexanoate
P–05–0043	10/19/04	01/16/05	CBI	(G) Open, non-dispersive (dyestuff)	(G) Copper phthalocyanine sulfonic acid salt
P–05–0044	10/20/04	01/17/05	Surface Specialties, Inc.	(S) Resin for water based paints	(G) Urethane modified polycarboxylic resin
P–05–0045	10/21/04	01/18/05	Surface Specialties, Inc.	(S) Resin for paints	(G) Hydroxy functional polyacrylate resin
P–05–0046	10/21/04	01/18/05	CBI	(G) Protective films and coatings	(G) 4,4' methylene diphenyl diisocyanate based polyurethane polymer
P–05–0047	10/21/04	01/18/05	Surface Specialties, Inc.	(S) Elasticity agent for printing inks	(G) Stabilized aluminum alcoholate
P–05–0048	10/21/04	01/18/05	CBI	(G) Additive to pigments for automobile paint	(G) Phthalocyanine compound
P–05–0049	10/22/04	01/19/05	CBI	(G) Additive for adhesives	(G) Diglycidyl bisphenol a adduct
P–05–0050	10/22/04	01/19/05	Firmenich Inc.	(S) Isolated intermediate	(S) Benzene, (3,3-dimethoxy-2-methylpropyl)-
P–05–0051	10/25/04	01/22/05	CBI	(G) Laminating adhesive	(G) Polyester-polyurethane resin
P–05–0052	10/25/04	01/22/05	Wacker Silicones a Division of Wacker Chemical Corporation	(S) Additive for plastics and rubbers	(G) Polydimethylsiloxane polymethyl methacrylate polyglycidyl methacrylate graft copolymer
P–05–0053	10/25/04	01/22/05	CBI	(G) Surfactant/dispersant	(G) Formic acid, compound with (chloromethyl)oxirane polymer with alykyldiamine, 4,4′-(1-methylethylidene)bis[phenol] and tetradecyloxirane, acetate (salt)
P–05–0054	10/25/04	01/22/05	CBI	(G) Industrial coatings binder	(G) Neodecanoic acid, 1,6-hexanediylbis[imino(2-hydroxy-3,1-propanediyl)] ester, polymer with (chloromethyl)oxirane, alkyldiamine, 4,4′-(1-methylethylidene)bis[phenol] and 2,2′-[(1-methylethylidene)bis(4,1-phenyleneoxymethylene)]bis[oxirane], reaction products with diethanolamine, acetates (salts) formates (salts)
P–05–0055	10/25/04	01/22/05	Firmenich Inc.	(S) Isolated intermediate	(S) Benzenepropanal, .alpha.-methyl-
P–05–0056	10/25/04	01/22/05	CBI	(G) Open non-dispersive (cathode additive)	(G) Lanthanum manganese strontium oxide
P–05–0057	10/26/04	01/23/05	CBI	(G) Contained use in energy production	(G) Ether amine phosphonate salt
P–05–0058	10/26/04	01/23/05	CBI	(G) Contained use in energy production	(G) Ether amine phosphonate salt
P–05–0059	10/26/04	01/23/05	CBI	(G) Contained use in energy production	(G) Ether amine phosphonate salt
P–05–0060	10/26/04	01/23/05	CBI	(G) Contained use in energy production	(G) Ether amine phosphonate
P–05–0061	10/26/04	01/23/05	CBI	(G) Contained use in energy production	(G) Ether amine phosphonate salt
P–05–0062	10/26/04	01/23/05	CBI	(G) Contained use in energy production	(G) Ether amine phosphonate salt
P–05–0063	10/26/04	01/23/05	CBI	(G) Contained use in energy production	(G) Ether amine phosphonate salt
P–05–0064	10/26/04	01/23/05	CBI	(G) Contained use in energy production	(G) Ether amine phosphonate salt
P–05–0065	10/26/04	01/23/05	CBI	(G) Contained use in energy production	(G) Ether amine phosphonate salt
P–05–0066	10/27/04	01/24/05	CBI	(S) Clear wood finishes	(G) Polyester polyurethane
P–05–0067	10/27/04	01/24/05	DIC International (USA), Inc.	(G) Hard coating for plastics	(G) Fatty acids dimers, polymer with alkoxylated phenol, hydroxy ester acrylate, cyclohexyl isocyanate and cyclic carboxylic acid.
P–05–0068	10/27/04	01/24/05	CBI	(G) Fuel additive	(G) Cerium-based organic compound
P–05–0069	10/28/04	01/25/05	CBI	(S) Masonry water repellant coating	(G) Alkyl modified polysiloxane copolymer

I. 80 PREMANUFACTURE NOTICES RECEIVED FROM: 10/18/04 TO 11/09/04—Continued

Case No.	Received Date	Projected Notice End Date	Manufacturer/Importer	Use	Chemical
P–05–0070	10/28/04	01/25/05	CBI	(S) Masonry water repellant coating	(G) Alkyl modified polysiloxane
P–05–0071	10/28/04	01/25/05	CBI	(G) Industrial structural materials	(G) Telechelic polyacrylates
P–05–0072	10/28/04	01/25/05	CBI	(G) Coating component	(G) Polymer of acrylate and methacrylate esters
P–05–0073	11/01/04	01/29/05	CBI	(G) Destructive use	(G) Substituted maleimide
P–05–0074	11/01/04	01/29/05	CBI	(G) Destructive use	(G) Maleimide urethane oligomer
P–05–0075	11/01/04	01/29/05	CBI	(G) Textile chemical	(G) Perfluoroalkylethyl methacrylate copolymer
P–05–0076	11/01/04	01/29/05	CBI	(G) Destructive use	(G) Substituted maleimide
P–05–0077	11/01/04	01/29/05	Chemical Technologies, LLC	(S) Hydrophilic textile finish	(S) Siloxanes and Silicones, di-me, 3-hydroxypropyl me, ethers with polyethylene glycol and polyethylene glycol mono(2-carboxyethyl) ether, polymers with 1,1′-methylenebis[4-isocyanatocyclohexane]
P–05–0078	11/01/04	01/29/05	KAO Specialties Americas LLC	(S) Emulsifier in metalworking fluids; thickener and foam booster in dishwashing agent and car shampoo	(S) Amides, rape-oil, *n*-(hydroxyethyl),ethoxylated
P–05–0079	11/02/04	01/30/05	CBI	(G) Closed, non-dispersive; pigment modifier	(G) Potassium salt of substituted arylazo butanamide
P–05–0080	11/03/04	01/31/05	CBI	(S) Lubricant base oil sales	(G) Chemical 1: Paraffinic light base oil
P–05–0081	11/03/04	01/31/05	CBI	(S) Lubricant base oil sales	(G) Paraffinic heavy base oil
P–05–0082	11/03/04	01/31/05	CBI	(S) Diesel blending; note: % of substance expected per use are approximate figures	(G) Hydrotreated middle distillate
P–05–0083	11/03/04	01/31/05	CBI	(S) Sales as refinery feed; refinery feedstock	(G) Light catalytic cracked distillate
P–05–0084	11/03/04	01/31/05	CBI	(S) Diesel blending; note: % of substance expected per use are approximate figures	(G) Hydrocracked light distillate
P–05–0085	11/03/04	01/31/05	CBI	(S) Gasoline blending	(G) Hydrotreated light distillate
P–05–0086	11/03/04	01/31/05	CBI	(S) Diesel blending; cat cracker feed; note: % of substance expected per use for diesel blending are aproximate figures	(G) Hydrocracked heavy distillate
P–05–0087	11/03/04	01/31/05	Firmenich Inc.	(S) Aroma for use in fragrance mixtures, which in turn are used in perfumes, soaps, cleansers, etc.	(S) Spiro[5.5]undec-8-en-1-ol, 2,2,9,11-tetramethyl-, acetate
P–05–0088	11/03/04	01/31/05	CBI	(S) Refinery feedstock	(G) Branched and linear hydrocarbons
P–05–0089	11/03/04	01/31/05	CBI	(S) Gasoline blending	(G) Reformate naphtha, full range
P–05–0090	11/03/04	01/31/05	CBI	(S) Refinery feed to catalytic reformer; heavy naphtha sales	(G) Chemical 1: Heavy naphtha
P–05–0091	11/03/04	01/31/05	CBI	(S) Gasoline blending; refinery feed to catalytic reformer	(G) Chemical 2: Hydrocracked heavy naphtha
P–05–0092	11/03/04	01/31/05	CBI	(S) Gasoline blending	(G) Hydrodesulfurized heavy naphtha
P–05–0093	11/03/04	01/31/05	CBI	(S) Gasoline blending	(G) Neutralized light naphtha
P–05–0094	11/03/04	01/31/05	CBI	(S) Gasoline blending	(G) Hydrotreated heavy naphtha
P–05–0095	11/03/04	01/31/05	CBI	(S) Refinery feed to treater	(G) Catalytic cracked heavy naphtha
P–05–0096	11/03/04	01/31/05	CBI	(S) Gasoline blending; light naphtha sales	(G) Chemical 1: Light naphtha
P–05–0097	11/03/04	01/31/05	CBI	(S) Gasoline blending	(G) Chemical 2: Hydrocracked light naphtha
P–05–0098	11/03/04	01/31/05	CBI	(S) Gasoline blending	(G) Hydrodesulfurized light naphtha
P–05–0099	11/03/04	01/31/05	CBI	(S) Gasoline blending	(G) Neutralized light naphtha
P–05–0100	11/03/04	01/31/05	CBI	(S) Production feed to treater	(G) Catalyst cracked light naphtha
P–05–0101	11/03/04	01/31/05	CBI	(S) Gasoline blending	(G) Hydrotreated light naphtha
P–05–0102	11/04/04	02/01/05	CBI	(G) Open non-dispersive (fuel additive)	(G) Polyether polyurethane
P–05–0103	11/05/04	02/02/05	Eastman Kodak Company	(G) Chemical intermediate, destructive use	(G) Halo phenyl amino substituted cyclohexene salt

I. 80 PREMANUFACTURE NOTICES RECEIVED FROM: 10/18/04 TO 11/09/04—Continued

Case No.	Received Date	Projected Notice End Date	Manufacturer/Importer	Use	Chemical
P–05–0104	11/05/04	02/02/05	Ashland Inc., Environmental Health and Safety	(G) Two-component laminating adhesive designed to reduce the level of aromatic amine migration. It has been recommended by the food and drug administration that food packaging should achieve > 0.7.	(G) Polyurethane prepolymer
P–05–0105	11/05/04	02/02/05	CIBA Specialty Chemicals Corporation	(S) A softener for textile fabrics	(G) Reaction product of alkylcarboxylic acid and substituted ethanol amine acetate salt
P–05–0106	11/05/04	02/02/05	CBI	(S) Polymerization initiator for polvol production	(S) Hexaneperoxoic acid, 2-ethyl-, 1,1,3,3-tetramethylbutyl ester
P–05–0107	11/09/04	02/06/05	CBI	(G) Paper/textile chemical	(G) Perfluoroalkylethyl methacrylate copolymer
P–05–0108	11/09/04	02/06/05	Mitsui Chemicals America, Inc.	(G) Coating resin	(S) 2-propenoic acid, 2-methyl-, polymer with 2-hydroxyethyl 2-methyl-2-propenoate and methyl 2-methyl-2-propenoate, 2,2′-azobis[2-methylpropanenitrile]-initiated
P–05–0109	11/09/04	02/06/05	Degussa Corporation	(S) Moisture curable adhesive	(G) Polymer of cycloaliphatic diisocyanate, aliphatic diol and aliphatic dicarboxylic acid
P–05–0110	11/09/04	02/06/05	Cognis Corporation	(S) Plastic softner	(S) 1,2-benzenedicarboxylic acid, bis(methylcyclohexyl) ester
P–05–0111	11/09/04	02/06/05	CBI	(G) Additive, open, non-dispersive use	(G) Toluylenediisocyanate, reaction product with benzenedimethanamine and methoxypolyethylene glycol
P–05–0112	11/09/04	02/06/05	Kuraray America, Inc.	(S) Organic solvent of polyurethane plastic coating; ingredient of various kinds of paint; organic solvent of polyurethane resin; ingredient of cleaning agent, especially for commercial use; organic solvent for screen ink	(S) 1-butanol, 3-methoxy-3-methyl-, acetate
P–05–0113	11/09/04	02/06/05	CBI	(G) Additive, open, non-dispersive use	(G) Polyethylene-polypropylene glycol, reaction product with octadecylisocyanate
P–05–0114	11/09/04	02/06/05	CBI	(G) Fertilizer	(G) Phosphoric acid, copper (2+) salt (1:1:1) copper hydrogen phosphate
P–05–0115	11/09/04	02/06/05	Cognis Corporation	(G) Solvent for industrial product	(S) Carboxylic acids, C_{5-9}, esters with polyethylene glycol mono-me ether
P–05–0116	11/08/04	02/05/05	CIBA Specialty Chemicals Corporation	(S) A softener for textile fabrics	(G) Reaction product of alkylcarboxylic acid, substituted alkenyl amine with aromatic anhydride acetate salts
P–05–0117	11/09/04	02/06/05	CBI	(G) Fertilizer	(G) Copper ammonium phosphate or phosphoric acid ammonium copper salt
P–05–0118	11/08/04	02/05/05	CBI	(G) Additives for plastics	(G) Metalic salt of benzoate 2-(2-butoxyethoxy)ethyl phosphonate p-tert-butylbenzoate ph phosphonate oleate complexes
P–05–0119	11/08/04	02/05/05	CBI	(S) Emulsifier in emulsion polymerization	(G) Allylpolyalkylenglycolsulfate, ammonium salt
P–05–0120	11/08/04	02/05/05	CBI	(S) Emulsifier in emulsion polymerization	(G) Allylpolyalkylenglycolsulfate, ammonium salt
P–05–0121	11/09/04	02/06/05	Aques Chemical Consulting Group, LLC	(G) Emulsifier	(G) Vinyl acrylic copolymer

In Table II of this unit, EPA provides the following information (to the extent that such information is not claimed as CBI) on the Notices of Commencement to manufacture received:

II. 38 NOTICES OF COMMENCEMENT FROM: 10/18/04 TO 11/09/04

Case No.	Received Date	Commencement Notice End Date	Chemical
P–04–0383	09/08/04	08/19/04	(G) Hydroxyalkyl carboxylic acid, polymer with alkylamine, alkanediol, alkyldiisocyanate and polyalkyl ether, polyalkylene glycol ether-blocked, compounds with alkylamine
P–02–0221	11/09/04	10/19/04	(G) Polyester/styrene-acrylic grafted resin
P–03–0256	10/28/04	10/18/04	(G) Hydroxyalkylpolyglycolether
P–03–0356	10/18/04	09/24/04	(G) Halogenated substituted mercaptophenyl alkyl ether
P–03–0365	11/09/04	10/08/04	(G) Halogenated substituted benzenesulfonyl chloride
P–03–0552	10/18/04	09/20/04	(G) Amine salt of cyclic carboxylic acid, polymer with hydroxy substituted alkane, branched alkyl diol, alkanediol, alkoxylated triol and alkanetriol.
P–03–0657	10/15/04	10/09/04	(S) Oxirane, methyl-, polymer with oxirane, monoC_{8-10} alkyl ethers, ethers with 1,2-decanediol(1:1)
P–03–0797	11/04/04	10/14/04	(G) Halogenated heteropolycycle
P–04–0025	10/25/04	09/28/04	(G) Aminated styrenate acrylic salt
P–04–0139	10/19/04	10/04/04	(G) Modified amidoamine
P–04–0144	10/19/04	10/03/04	(G) Modified amidoamine
P–04–0322	10/28/04	10/14/04	(S) 1,3-benzenedicarboxylic acid, polymer with 2,2-dimethyl-1,3-propanediol, 2,5-furandione, 2,2′-oxybis[ethanol] and 1,2-propanediol
P–04–0331	11/09/04	10/09/04	(G) Substituted phenoxy anthraquinone
P–04–0434	10/25/04	09/29/04	(G) Halo sulfonyl substituted alkane
P–04–0442	11/03/04	10/27/04	(G) Reaction product of 4,4′-(1-methylethylidene)bisphenol, polymer with (chloromethyl) oxirane; polyethylene glycol; ethyleneamine; cresyl glycidyl ether
P–04–0484	10/19/04	09/29/04	(G) Rosin modified phenolic resin
P–04–0508	11/04/04	10/20/04	(S) Hexanoic acid, 2-ethyl-, mixed triesters with benzoic acid and trimethylolpropane
P–04–0509	11/04/04	10/20/04	(S) Hexanoic acid, 2-ethyl-, mixed diesters with benzoic acid and neopentyl glycol
P–04–0510	11/04/04	10/20/04	(S) Hexanoic acid, 2-ethyl-, mixed diesters with benzoic acid and diethylene glycol
P–04–0552	11/05/04	10/22/04	(G) Spiro[isobenzofuran-1(3h),9′-[9h]heteropolycycle]-3-one, 3′-chloro-6′-(2,3-dihydro-1h-indol-1yl)-4,5,6,7-tetrafluoro-
P–04–0553	11/05/04	10/26/04	(G) Spiro[isobenzofuran-1(3h),9′-[9h]heteropolycycle]-3-one, 3′-(2,3-dihydro-1h-indol-1yl)-4,5,6,7-tetrafluoro-6′-[(4-methoxy-2-methylphenyl)amino]-
P–04–0554	11/05/04	10/19/04	(G) Spiro[isobenzofuran-1(3h),9′-[9h]heteropolycycle]-3-one, 3′,6′-dichloro-4,5,6,7-tetrafluoro-
P–04–0555	11/05/04	10/16/04	(G) Spiro[isobenzofuran-1(3h),9′-[9h]heteropolycycle]-3-one, 4,5,6,7-tetrafluoro-3′,6′-dihydroxy-
P–04–0558	11/01/04	10/13/04	(G) Amine neutralized alkyd resin
P–04–0566	11/03/04	10/12/04	(G) Poly[oxy(methyl-1,2-ethanediyl)], .alpha.-hydro-.omega.-hydroxy-, polymer with isocyanate, 2-hydroxyethyl methacrylate-blocked
P–04–0576	10/21/04	09/08/04	(S) Soybean oil, maleated, ester with triethanolamine
P–04–0592	11/09/04	10/12/04	(G) Polyurea thickener
P–04–0628	11/01/04	10/12/04	(G) Spiro[isobenzofuran-1(3h),9′-[9h]heteropolycycle]-3-one, 3′-[(2-methylphenyl)amino]-6′-[(2-methylphenyl)octylamino]-
P–04–0629	11/01/04	10/08/04	(G) Spiro[isobenzofuran-1(3h),9′-[9h]heteropolycycle]-3-one, 3′,6′-bis[(2-methylphenyl)amino]-
P–04–0631	10/18/04	10/06/04	(G) Fatty acid polyester amide
P–04–0645	10/15/04	09/16/04	(G) Amine functional epoxy resin salted with organic acid
P–04–0668	11/08/04	10/08/04	(G) Reactant polymer with the acrylate copolymer of (an isocyanate spices and three spices of acrylate polymer), and the polyurethane acrylate
P–04–0669	10/20/04	09/22/04	(G) Copolymer of mixed alkyl methacrylates and a substituted alkyl methacrylate
P–04–0690	11/03/04	10/30/04	(G) Methyl amino ethyl ether
P–04–0695	11/04/04	11/02/04	(G) Alkanolamine phenolic mannich adduct
P–04–0702	11/03/04	10/12/04	(G) Modified silicone polymer
P–04–0708	11/03/04	10/12/04	(G) Telechelic polyacrylates
P–04–0778	11/05/04	10/28/04	(G) Polyester

List of Subjects

Environmental protection, Chemicals, Premanufacturer notices.

Dated: November 30, 2004.

Vanessa Williams,

Acting Director, Information Management Division, Office of Pollution Prevention and Toxics.

[FR Doc. 04–26945 Filed 12–7–04; 8:45 am]

BILLING CODE 6560–50–S

FEDERAL MARITIME COMMISSION

Notice of Agreements Filed

The Commission hereby gives notice of the filing of the following agreements under the Shipping Act of 1984. Interested parties may obtain copies of agreements by contacting the Commission's Office of Agreements at

202–523–5793 or via e-mail at *tradeanalysis@fmc.gov*. Interested parties may submit comments on an agreement to the Secretary, Federal Maritime Commission, Washington, DC 20573, within 10 days of the date this notice appears in the **Federal Register**.

Agreement No.: 011463–006.

Title: East Coast of North America to West Coast of South America and Caribbean Cooperative Working Agreement.

Parties: Compania Sud Americana de Vapores S.A.; Hamburg-Sud; and Compania Chilena de Navagacion Interoceania, S.A.

Filing Party: Walter M. Lion, Esq.; McLaughlin & Stern, LLP; 260 Madison Avenue; New York, N.Y. 10018.

Synopsis: The amendment deletes APL CO. PTE Ltd. as a party to the agreement and makes various corresponding changes in the agreement. The parties request expedited review.

Agreement No.: 011701–008.

Title: Pacific East Coast Express Agreement.

Parties: China Shipping Container Lines Co., Ltd.; China Shipping Container Lines (Hong Kong) Co., Ltd.; CMA CGM, S.A.; P&O Nedlloyd B.V.; and P&O Nedlloyd Limited; Filing Party: Brett M. Esber, Esq.; Blank Rome LLP; Watergate 600 New Hampshire Avenue, NW; Washington, DC 20037.

Synopsis: The amendment adds CSCL (Hong Kong) as a party to the agreement. The parties request expedited review.

Agreement No.: 011850–001.

Title: CMA CGM/CSCL Cross Space Charter, Sailing and Cooperative Working Agreement—North China, Japan/USWC Loop Agreement.

Parties: China Shipping Container Lines Co., Ltd.; China Shipping Container Lines (Hong Kong) Co., Ltd.; and CMA CGM, S.A. Filing Party: Brett M. Esber, Esq.; Blank Rome LLP; Watergate 600 New Hampshire Avenue, NW; Washington, DC 20037.

Synopsis: The amendment adds CSCL (Hong Kong) as a party to the agreement. The parties request expedited review.

Agreement No.: 011851–001.

Title: CMA-CGM/CSL PGX Slot Charter Agreement.

Parties: China Shipping Container Lines (Hong Kong) Co., Ltd.; China Shipping Container Lines Co., Ltd.; and CMA CGM, S.A.

Filing Party: Brett M. Esber, Esq.; Blank Rome LLP; Watergate 600 New Hampshire Avenue, NW; Washington, DC 20037.

Synopsis: The amendment adds CSCL (Hong Kong) as a party to the agreement. The parties request expedited review.

By Order of the Federal Maritime Commission.

Bryant L. VanBrakle,

Secretary.

[FR Doc. 04–26991 Filed 12–7–04; 8:45 am]

BILLING CODE 6730–01–P

FEDERAL MARITIME COMMISSION

Ocean Transportation Intermediary License Revocations

The Federal Maritime Commission hereby gives notice that the following Ocean Transportation Intermediary licenses have been revoked pursuant to section 19 of the Shipping Act of 1984 (46 U.S.C. app. 1718) and the regulations of the Commission pertaining to the licensing of Ocean Transportation Intermediaries, effective on the corresponding date shown below:

License Number: 016472N.
Name: (CAL.) KTL International, Inc.
Address: 3039 East Ana Street, Rancho Dominguez, CA 90221.
Date Revoked: November 25, 2004.
Reason: Failed to maintain a valid bond.

License Number: 013258N.
Name: Cargoline (USA) Inc.
Address: 33 Washington Street, 16th FL, Newark, NJ 07102.
Date Revoked: November 13, 2004.
Reason: Failed to maintain a valid bond.

License Number: 000861F.
Name: George J. Young & Co.
Address: 110 W. Ocean Blvd., Suite 622, Long Beach, CA 90801.
Date Revoked: November 14, 2004.
Reason: Failed to maintain a valid bond.

License Number: 018401F.
Name: Inlogix Corp.
Address: Lot 6 Monterrey Avenue, Geoconsult Bldg., San Juan, PR 00920.
Date Revoked: November 18, 2004.
Reason: Failed to maintain a valid bond.

License Number: 013489N.
Name: J.R. International Shipping, Inc.
Address: 25 Commerce Drive, Cranford, NJ 07016.
Date Revoked: November 7, 2004.
Reason: Failed to maintain a valid bond.

License Number: 017997F.
Name: Royal Lonestar Marketing, Inc. dba Royal Lonestar Forwarding.
Address: 3340 Greens Road, Bldg. A, Suite 880, Houston, TX 77032.
Date Revoked: November 3, 2004.
Reason: Failed to maintain a valid bond.

License Number: 011170F.
Name: Sage Freight Systems Inc. dba Sage Container Lines.
Address: 182–30 150th Road, Suite 108, Jamaica, NY 11413.
Date Revoked: November 23, 2004.
Reason: Failed to maintain a valid bond.

License Number: 017411N.
Name: Sunfreight Cargo International, Inc.
Address: 4130 Saviers Road, Oxnard, CA 93033.
Date Revoked: November 15, 2004.
Reason: Failed to maintain a valid bond.

License Number: 000489F.
Name: T.A. Coleman & Co., Inc.
Address: 393 Jericho Turnpike, Mineola, NY 11501.
Date Revoked: October 24, 2004.
Reason: Failed to maintain a valid bond.

License Number: 017747N.
Name: Tomcar Investment USA, Inc.
Address: 10773 NW. 58th Street, Suite 296, Miami, FL 33178.
Date Revoked: November 7, 2004.
Reason: Failed to maintain a valid bond.

Sandra L. Kusumoto,

Director, Bureau of Certification and Licensing.

[FR Doc. 04–26987 Filed 12–7–04; 8:45 am]

BILLING CODE 6730–01–P

FEDERAL MARITIME COMMISSION

Ocean Transportation Intermediary License Reissuance

Notice is hereby given that the following Ocean Transportation Intermediary license has been reissued by the Federal Maritime Commission pursuant to section 19 of the Shipping Act of 1984, as amended by the Ocean Shipping Reform Act of 1998 (46 U.S.C. app. 1718) and the regulations of the Commission pertaining to the licensing of Ocean Transportation Intermediaries, 46 CFR part 515.

License No.	Name/address	Date reissued
018415N	Global Link Logistics, Inc., 1990 Lakeside Parkway, Suite 300, Tucker, GA 30084	October 23, 2004.

Sandra L. Kusumoto,

Director, Bureau of Certification and Licensing.

[FR Doc. 04–26990 Filed 12–7–04; 8:45 am]

BILLING CODE 6730–01–P

FEDERAL MARITIME COMMISSION

Ocean Transportation Intermediary License Rescission of Order of Revocation

Notice is hereby given that the Orders revoking the following licenses are being rescinded by the Federal Maritime Commission pursuant to sections 14 and 19 of the Shipping Act of 1984 (46 U.S.C. app. 1718) and the regulations of the Commission pertaining to the licensing of Ocean Transportation Intermediaries, 46 CFR Part 515.

License No.	Name/address
016071N	Heron International, Inc., 1149 Ellsworth Drive, Pasadena, TX 77506
017940F	Kristen Brandimarte dba Emmeli Shipping, 3200 Sunset Avenue, Suite 209, Ocean, NJ 07712
016027F	Lion Exhibition Freight, Inc., 1153 Willingham Drive, Atlanta, GA 30349

Sandra L. Kusumoto,

Director, Bureau of Certification and Licensing.

[FR Doc. 04–26989 Filed 12–7–04; 8:45 am]

BILLING CODE 6730–01–P

FEDERAL MARITIME COMMISSION

Ocean Transportation Intermediary License Applicants

Notice is hereby given that the following applicants have filed with the Federal Maritime Commission an application for license as a Non-Vessel-Operating Common Carrier and Ocean Freight Forwarder—Ocean Transportation Intermediary pursuant to section 19 of the Shipping Act of 1984 as amended (46 U.S.C. app. 1718 and 46 CFR part 515).

Persons knowing of any reason why the following applicants should not receive a license are requested to contact the Office of Transportation Intermediaries, Federal Maritime Commission, Washington, DC 20573.

Non-Vessel-Operating Common Carrier Ocean Transportation Intermediary Applicants

Tillicum Global Networks, Inc., 830 Arlington Avenue, Torrance, CA 90501. Officers: Eun K. Han, President (Qualifying Individual), David G. Han, Secretary

ELS Logistics Services LLC, 500 Kennedy Drive, Sayreville, NJ 08872. Officers: Max Kislevitz, Vice President (Qualifying Individual), Edmond Erani, President.

Premier Van Lines, Inc. dba Premier International Group, 3953 South 200 East, Salt Lake City, UT 84107. Officers: Wm. Jake Shepherd, Senior Vice President (Qualifying Individual), Michael A. Cordell, President.

Ours Logis, Inc. 550 Carson Plaza Drive, Suite 113, Carson, CA 90746. Officer: Hyung Joon Ahn, President (Qualifying Individual).

Aramex International Courier Ltd. dba Aramex International, 165–15 145th Drive, Jamaica, NY 11434. Officers: Haitham Alex Ajlouni, President (Qualifying Individual), Mike A. Abufaris, General Manager.

Petcon Freight Systems, LLC, 175–01 Rockaway Blvd., Suite 215–218, Jamaica, NY 11434. Officers: Ben Arculli, President (Qualifying Individual), David Mah, CEO.

Tru-Line Logistics, Inc., 3025 W. Artesia Blvd., Suite 100, Torrance, CA 90504. Officers: Susan Mi Young Pak Thomas, CEO (Qualifying Individual), Mark Alan Thomas, CFO.

Yicheng Logistics (Puerto Rico), Inc., 954 Ponce De Leon Avenue, Suite 704A, Santurce, PR 00907. Officers: Yaqing Zhou, President (Qualifying Individual), Iris Robles, General Manager.

Non-Vessel Operating Common Carrier and Ocean Freight Forwarder Transportation Intermediary Applicants

Kairos Logistics, LLC, 9613 Brock Avenue, Downey, CA 90240. Officers: Kang M. Lee, Operating Manager (Qualifying Individual), Jeffrey Joo Hyung Lee, Secretary.

Atlantic Ocean International, Corp., 7205 NW 68th Street, Bay #14, Miami, FL 33166. Officers: Edith Ochoa, President (Qualifying Individual), Edith Restrepo, Vice President.

Frontline Sourcing, Inc., 1053–B Willingham Drive, Atlanta, GA 30344. Officers: Bernell Grizzard, President (Qualifying Individual), Raiford D. Helton, Secretary.

Volvo Logistics North America, Inc., 113 Corporate Drive, Radford, VA 24141. Officers: Alfred R. Sheeley, Vice President (Qualifying Individual), Mary S. Alt, President.

Ocean Freight Forwarder—Ocean Transportation Intermediary Applicants

Pacorini USA, Inc., One Alabo Street, New Orleans, LA 70117. Officers: Barbara G. Chopin, Vice President (Qualifying Individual), Mario Casciano, Director.

Navicargo Logistics and CFS, Inc., 8860 NW 102 Street, Medley, FL 33178. Officers: Orlando Yanez Santana, President (Qualifying Individual), Evaristo Yanez Santana, Secretary.

Dated: December 3, 2004.

Bryant L. VanBrakle,

Secretary.

[FR Doc. 04–26988 Filed 12–7–04; 8:45 am]

BILLING CODE 6730–01–P

FEDERAL RESERVE SYSTEM

Formations of, Acquisitions by, and Mergers of Bank Holding Companies

The companies listed in this notice have applied to the Board for approval, pursuant to the Bank Holding Company Act of 1956 (12 U.S.C. 1841 *et seq.*) (BHC Act), Regulation Y (12 CFR Part 225), and all other applicable statutes and regulations to become a bank holding company and/or to acquire the assets or the ownership of, control of, or the power to vote shares of a bank or bank holding company and all of the banks and nonbanking companies owned by the bank holding company, including the companies listed below.

The applications listed below, as well as other related filings required by the Board, are available for immediate inspection at the Federal Reserve Bank indicated. The application also will be available for inspection at the offices of the Board of Governors. Interested persons may express their views in writing on the standards enumerated in the BHC Act (12 U.S.C. 1842(c)). If the proposal also involves the acquisition of a nonbanking company, the review also includes whether the acquisition of the nonbanking company complies with the standards in section 4 of the BHC Act (12 U.S.C. 1843). Unless otherwise noted, nonbanking activities will be conducted throughout the United States. Additional information on all bank holding companies may be obtained from the National Information Center website at *www.ffiec.gov/nic/*.

Unless otherwise noted, comments regarding each of these applications must be received at the Reserve Bank indicated or the offices of the Board of Governors not later than January 3, 2005.

A. Federal Reserve Bank of St. Louis (Randall C. Sumner, Vice President) 411 Locust Street, St. Louis, Missouri 63166–2034:

1. Home Bancshares, Inc., Conway, Arkansas; to acquire and additional 68 percent, for a total of 100 percent, of the voting shares of TCBancorp, Inc., North Little Rock, Arkansas, and thereby indirectly acquire voting shares of Twin City Bank, North Little Rock, Arkansas.

B. Federal Reserve Bank of San Francisco (Tracy Basinger, Director, Regional and Community Bank Group) 101 Market Street, San Francisco, California 94105–1579:

1. Westamerica Bancorporation, San Rafael, California; to merge with Redwood Empire Bancorp, Santa Rosa, California, and thereby indirectly acquire National Bank of the Redwoods, Santa Rosa, California. Comments regarding this application must be received by December 27, 2004.

Board of Governors of the Federal Reserve System, December 2, 2004.

Robert deV. Frierson,

Deputy Secretary of the Board.

[FR Doc. 04–26937 Filed 12–7–04; 8:45 am]

BILLING CODE 6210–01–S

FEDERAL RESERVE SYSTEM

Notice of Proposals to Engage in Permissible Nonbanking Activities or to Acquire Companies that are Engaged in Permissible Nonbanking Activities; Correction

This notice corrects a notice (FR Doc. 04–26284) published on page 69370 of the issue for Monday, November 29, 2004.

Under the Federal Reserve Bank of San Francisco heading, the entry for The Bank of Tokyo–Mitsubishi, Ltd., and Mitsubishi Tokyo Financial Group, Inc., both of Tokyo, Japan, is revised to read as follows:

A. Federal Reserve Bank of San Francisco (Tracy Basinger, Director, Regional and Community Bank Group) 101 Market Street, San Francisco, California 94105–1579:

1. The Bank of Tokyo–Mitsubishi, Ltd., and Mitsubishi Tokyo Financial Group, Inc., both of Tokyo, Japan; to acquire UFJ Futures, L.L.C., Chicago, Illinois, and Central Leasing (U.S.A.), Inc., Florence, Kentucky, and thereby engage in the finance leasing of equipment, pursuant to section 225.28(b)(3), the execution and clearance of futures and options contracts and other transactional services, pursuant to section 225.28 (b)(7) of Regulation Y.

In addition, Mitsubishi Bank & Trust, Corporation, Tokyo, Japan, and Mitsubishi Tokyo Financial Group, Inc., Tokyo, Japan, has applied to acquire UFJ Trust Company of New York, New York, and thereby engage in providing trust services on a national and international basis, pursuant to section 225.28(b)(5) of Regulation Y.

Comments on this application must be received by December 13, 2004.

Board of Governors of the Federal Reserve System, December 2, 2004.

Robert deV. Frierson,

Deputy Secretary of the Board.

[FR Doc. 04–26936 Filed 12–7–04; 8:45 am]

BILLING CODE 6210–01–S

FEDERAL TRADE COMMISSION

Granting of Request for Early Termination of the Waiting Period Under the Premerger Notification Rules

Section 7A of the Clayton Act, 15 U.S.C. 18a, as added by Title II of the Hart-Scott-Rodino Antitrust Improvements Act of 1976, requires persons contemplating certain mergers or acquisitions to give the Federal Trade Commission and the Assistant Attorney General advance notice and to wait designated periods before consummation of such plans. Section 7A(b)(2) of the Act permits the agencies, in individual cases, to terminate this waiting period prior to its expiration and requires that notice of this action be published in the **Federal Register.**

The following transactions were granted early termination of the waiting period provided by law and the premerger notification rules. The grants were made by the Federal Trade Commission and the Assistant Attorney General for the Antitrust Division of the Department of Justice. Neither agency intends to take any action with respect to these proposed acquisitions during the applicable waiting period.

Trans #	Acquiring	Acquired	Entities
TRANSACTIONS GRANTED EARLY TERMINATION—11/01/2004			
20050086	Warburg Pincus Private Equity VIII, L.P.	Parthenon Investors II, L.P	Spheris Inc.
20050097	FS Equity Partners V, L.P	Gregg Appliances Inc	Gregg Appliances Inc.
20050103	Sumner M. Redstone	Raul Alarcon, Jr	Spanish Broadcasting System, Inc.
20050121	Warburg Pincus Private Equity VIII, L.P.	Spheris Holding III, Inc	Spheris Holding III, Inc.
TRANSACTIONS GRANTED EARLY TERMINATION—11/03/2004			
20050090	Takeda Pharmaceutical Company Limited.	BioNumerik Pharmaceuticals, Inc	BioNumerik Pharmaceuticals, Inc.
TRANSACTIONS GRANTED EARLY TERMINATION—11/03/2004			
20050050	Henkel KGaA	The Clorox Company	Splitco
20050051	Cooper Cameron Corporation	Precision Castparts	AOP Industries, Inc., CW Valves Services Co., Inc., PCC Flow Technologies LP, PCC Valves & Controls, Inc.
20050081	William Sauder	Riverside Forest Products Limited	Riverside Forest Products Limited.
20050094	Wellspring Capital Partners III, LLP	The Stanley Works	The Stanley Works.
20050102	Computershare Limited	DST Systems, Inc	EquiServe, Inc.
20050108	Computer Associates International, Inc.	Netegrity, Inc	Netegrity, Inc.

Trans #	Acquiring	Acquired	Entities
20050117	Estate of Ernest L. Samuel	Mr. Charles E. Pompea	Primac Corp., Primary Steel, Inc., Primtech LLC
TRANSACTIONS GRANTED EARLY TERMINATION—11/04/2004			
20050020	PacifiCare Health Systems, Inc	American Medical Security Group, Inc.	American Medical Security Group, Inc.
20050039	J. W. Childs Equity Partners, III, L.P	Vestar Capital Partners, III, L.P	Sheridan Holdings, Inc.
20050069	AFFC Holdings, Inc	BP p.l.c	Amoco Fabrics and Fibers Company, BP Corporation North America Inc.
20050087	ViroPharma Incorporated	Eli Lilly and Company	Eli Lilly and Company.
TRANSACTIONS GRANTED EARLY TERMINATION—11/05/2004			
20050073	Worley Group Limited	Parsons Employee Stock Ownership Plan.	Parsons E&C Corporation
20050104	Raul Alarcon, Jr	Sumner M. Redstone	Infinity Broadcasting Corporation of San Francisco
20050105	CompuCredit Corporation	Dennis M. Mathisen	BANKFIRST.
20050114	Atlantic Power Corporation	Teton Power Holdings, LLC	Onondaga Cogeneration Limited Partnership, Split Rock Holdings, LLC, Topsham Hydroelectric Generating Facility.
20050115	Atlantic Power Corporation	ArcLight Energy Partners Fund II, L.P.	Umatilla Power Funding, LLC
20050122	Cypress Merchant Banking Partners II L.P.	Stone Canyon Entertainment Corp	Stone Canyon Entertainment Corp.
20050129	Ryerson Tull, Inc	Alcoa Inc	Integris Metals, Inc.
TRANSACTIONS GRANTED EARLY TERMINATION—11/08/2004			
20050113	Southern Wine & Spirits of America, Inc.	David Taub	Darmart Enterprises, Inc., Gallo Wines Distributors, L.L.C. d/b/a, Premier Wines & Spirit, New York Depot Distributing Co., LLC.
20050125	United Online, Inc	Classmates Online, Inc	Classmates Online, Inc.
20050126	Warburg Pincus Private Equity VIII, L.P.	Avicis, Inc	Avicis, Inc.
20050127	World Directories S.a.r.l. (“WDS”)	VNU N.V	VNU World Directories Inc.
20050128	Ryerson Tull, Inc	BHP Billiton Pic	Integris Metals, Inc.
20050130	Rush Enterprises, Inc	Jesse and Milo Kirk	American Truck Source, Inc.
20050131	J.P. Morgan Chase & Co	Michael Hirtenstein	WestCom Corporation
20050133	Centene Corporation	Swope Community Enterprises	FirstGuard Health Plan, Inc., FirstGuard, Inc.
20050134	Auto Sueco, Lda	Aktiebolaget Volvo	SABA Holding Company.
20050135	CharterMac	Capri Realty Capital, LLC	Capri Capital Limited Partnership
20050138	KeyCorp	American Express Company	American Express Business Finance Corporation
TRANSACTIONS GRANTED EARLY TERMINATION—11/09/2004			
20050066	Armor Holdings, Inc	The Specialty Group, Inc	The Specialty Group, Inc.
20050120	Fuji Photo Film Co., Ltd	Arch Chemicals, Inc	Arch Chemical Specialties Products, Inc., Arch Electronic Chemicals, Inc., Arch Specialty Chemicals, Inc.

FOR FURTHER INFORMATION CONTACT: Sandra M. Peay, Contact Representative, or Renee Hallman, Case Management Assistant, Federal Trade Commission, Premerger Notification Office, Bureau of Competition, Room H–303, Washington, DC 20580, (202) 326–3100.

By direction of the Commission.

Donald S. Clark,

Secretary.

[FR Doc. 04–26938 Filed 12–7–04; 8:45 am]

BILLING CODE 6750–01–M

DEPARTMENT OF HEALTH AND HUMAN SERVICES

Centers for Disease Control and Prevention

[30Day–05–0138]

Proposed Data Collections Submitted for Public Comment and Recommendations

The Centers for Disease Control and Prevention (CDC) publishes a list of information collection requests under review by the Office of Management and Budget (OMB) in compliance with the Paperwork Reduction Act (44 U.S.C. Chapter 35). To request a copy of these requests, call the CDC Reports Clearance Officer at (404) 498–1210 or send an email to *omb@cdc.gov*. Send written comments to CDC Desk Officer, Human Resources and Housing Branch, New Executive Office Building, Room 10235, Washington, DC 20503 or by fax to (202) 395–6974. Written comments should be received within 30 days of this notice.

Proposed Project

Pulmonary Function Testing Course Approval Program, 29 CFR 1910.1043, OMB No. 0920–0138—Revision—National Institute for Occupational Safety and Health (NIOSH), Centers for Disease Control and Prevention (CDC).

NIOSH has the responsibility under the Cotton Dust Standard, 29 CFR 1920.1043, for approving courses to train technicians to perform pulmonary function testing in the Cotton Dust Industry. Successful completion of a NIOSH-approved course is mandatory under the Standard. To carry out its responsibility, NIOSH maintains a Pulmonary Function Testing Course Approval Program. The program consists of an application submitted by potential sponsors who seek NIOSH approval to conduct courses. The application form and added materials, including an agenda, vitae, and course materials are reviewed by NIOSH to determine if the applicant has developed a program which adheres to the criteria required in the Standard. Following approval, any subsequent changes to the course are submitted by course sponsors via letter or e-mail and reviewed by NIOSH staff to assure that the changes in faculty or course content continue to meet course requirements.

Course sponsors also voluntarily submit an annual report to inform NIOSH of their class activity level and if any faculty changes have occurred. Applications and materials to be a course sponsor and carry out training are submitted voluntarily by institutions and organizations throughout the country. This is required by NIOSH to evaluate a course to determine whether it meets the criteria in the Standard and whether technicians will be adequately trained as mandated under the Standard. One question regarding faculty changes was added to the previously approved annual report. There will be no cost to respondents except their time to participate. The estimated annualized burden is 64 hours.

ANNUALIZED BURDEN TABLE

Respondents	Number of respondents	Number of responses/ respondents	Average burden/ response (in hrs)
Initial Application	5	1	3.5
Annual Report	50	1	45/60
Report for Course Changes	12	1	45/60

Dated: November 29, 2004.

B. Kathy Skipper,

Acting Director, Management Analysis and Services Office, Centers for Disease Control and Prevention.

[FR Doc. 04–26913 Filed 12–7–04; 8:45 am]

BILLING CODE 4163–18–P

DEPARTMENT OF HEALTH AND HUMAN SERVICES

Centers for Disease Control and Prevention

[7Day–05–AN]

Proposed Data Collections Submitted for Public Comment and Recommendations

In compliance with the requirement of Section 3506(c)(2)(A) of the Paperwork Reduction Act of 1995 for opportunity for public comment on proposed data collection projects, the Centers for Disease Control and Prevention (CDC) will publish periodic summaries of proposed projects. To request more information on the proposed projects or to obtain a copy of the data collection plans and instruments, call the CDC Reports Clearance Officer at (404) 498–1210. CDC is requesting an emergency clearance for this data collection with a seven-day public comment period. CDC is requesting OMB approval of this package seven days after the end of the public comment period.

Comments are invited on: (a) Whether the proposed collection of information is necessary for the proper performance of the functions of the agency, including whether the information shall have practical utility; (b) the accuracy of the agency's estimate of the burden of the proposed collection of information; (c) ways to enhance the quality, utility, and clarity of the information to be collected; and (d) ways to minimize the burden of the collection of information on respondents, including through the use of automated collection techniques or other forms of information technology. As this is an emergency clearance, please direct comments to the CDC Desk Officer, Human Resources and Housing Branch, New Executive Office Building, Room 10235, Washington, DC 20503 or by fax to (202) 395–6974. Comments should be received within seven days of this notice.

Proposed Project: Performance Evaluation Program for Severe Acute Respiratory Syndrome Antibody (SARS Ab) Testing—New—Public Health Practice Program Office (PHPPO), Centers for Disease Control and Prevention (CDC).

Great attention has been focused on SARS which is a viral respiratory illness caused by a coronavirus, called SARS-associated coronavirus (SARS–CoV). SARS was first reported in Asia in February 2003. Over the next few months, the illness spread to more than two dozen countries in North America, South America, Europe, and Asia before the SARS global outbreak of 2003 was contained.

The SARS virus has recently been shown to be endemic in some populations, and as the season most conducive for SARS infection approaches, the possibility for an outbreak or epidemic exists. Therefore, it is imperative that the CDC ensure all State Public Health laboratories and other laboratories designated by CDC remain proficient in performing SARS testing. For this reason, it is of critical public health importance, at this time, that the CDC develop and maintain a performance evaluation program for SARS.

CDC, through the Model Performance Evaluation Program (MPEP), intends to provide a new SARS–CoV testing performance evaluation program (SARS MPEP). This program will offer external performance evaluation for SARS Ab testing. Participation in the performance evaluation program is expected to lead to improved SARS testing performance because participants have the opportunity to identify areas for improvement. This will help ensure accurate testing as a basis for development of SARS prevention and intervention strategies.

This external quality assessment program will be made available at no cost (for receipt of sample panels) to 54 state laboratories. Participants in the

SARS MPEP will be required to submit results twice a year after testing mailed performance evaluation samples. Since SARS testing methods may change due to research and development conducted by CDC and potentially (in the future) by commercial kit manufacturers, CDC will collect the SARS Sample Result Surveys (SRS) information biannually. Further, since laboratories are not continuously testing for SARS, it is necessary to offer a performance evaluation challenge at least biannually so that the labs maintain sufficient proficiency to allow quick response to an outbreak.

CDC is requesting emergency approval to conduct the samples survey for six months while the complete information collection is being processed for clearance and approval. During this six-month period, approximately 54 states will be asked to participate on a one-time basis. There are no costs to respondents other than their time in processing the samples.

Form name	No. of respondents	No. of responses per respondent	Average burden per response (in hours)	Total burden (in hours)
SARS Testing Results Booklet	54	1	10/60	9
Total				9

Dated: December 2, 2004.

Alvin Hall,

Director, Management Analysis and Services Office, Centers for Disease Control and Prevention.

[FR Doc. 04–26914 Filed 12–7–04; 8:45 am]

BILLING CODE 4163–18–P

DEPARTMENT OF HEALTH AND HUMAN SERVICES

National Institutes of Health

Proposed Collection; Comment Request; BrainTrain4Kids: New Delivery of the Brain Power Program

SUMMARY: In compliance with the requirement of Section 3506(c)(2)(A) of the Paperwork Reduction Act of 1995, for opportunity for public comment on proposed data collection projects, the National Institute on Drug Abuse (NIDA), the National Institutes of Health (NIH) will public periodic summaries of proposed projects to be submitted to the Office of Management and Budget (OMB) for review and approval.

PROPOSED COLLECTION: *Title:* BrainTrain4Kids: New Delivery of the Brain Power Program.

Type of Information Collection Request: NEW.

Need and Use of Information Collection: This research will evaluate the effects of BrainTrain4Kids.com, an online program for students (Grades 2 and 3), on: (1) Students' knowledge of scientific inquiry, the human nervous system, the effects of alcohol and tobacco on the brain, and the differences between helpful and harmful drugs; (2) students' attitudes toward science in general; and (3) students' attitudes toward substance abuse. The secondary goals of the summative evaluation are to determine if changes in knowledge and attitudes are retained over a follow-up period as well as to determine if parents and second- and third-grade students will report a high degree of satisfaction with the online program. The online program is a new delivery of a National Institute on Drug Abuse science education curriculum for second- and third-grade teachers (Brain Power! The NIDA Junior Scientist Club) adapted for the Internet and for use by students at home under the guidance of their parents. if the new program is successful, the public will access to an evidence-based program via the Internet that contributes to scientific literacy and provides a basis of knowledge upon which to build future substance abuse prevention. In order to evaluate the effectiveness of the program, information will be collected from students before (pretest) and after (post-test) exposure to the website and again 3 to 6 weeks after the program has been completed (follow-up). Parents will be asked to complete usage logs at three points during their use of the BrainTrain4Kids website with their children. Prior to the evaluation study, the knowledge and attitude assessment instruments will be pilot-tested with a sample of students to determine validity and reliability. Additionally, during the development phase of the project, satisfaction surveys will be administered to students, parents, and teachers at two points during the development of the website to collect preference data and assess the level of satisfaction with the website. This is necessary to ensure target audience satisfaction with the final program. All data collection will occur online.

Frequency of Response: On occasion.

Affected Public: Second- and third-grade students, their parents, and their teachers.

Type of Respondents: Second- and third-grade students, their parents, and their teachers. The reporting burden is as follows:

Estimated Number of Respondents: 410.

Estimated Number of Responses per Respondent: one for seven key cohorts, three for one key cohort and six for one key cohort.

Average Burden Hours per Response: 0.574.

Estimated Total Annual Burden Hours Requested: 637.5.

There are no Capital Costs to report. There are no Operating or Maintenance Costs to report. The estimated annualized burden is summarized below.

Type of respondents	Estimated number of respondents	Estimated number of responses per respondent	Average burden hours per response	Estimated total burden hours requested
Students (Assessment Instrument Development)	30	1	0.75	22.5
Students (Summative Evaluation)	100	3	0.75	225
Students (Satisfaction Survey 1)	30	1	0.5	15
Students (Satisfaction Survey 2)	30	1	0.5	15
Parents (Summative Evaluation)	100	6	0.5	300
Parents (Satisfaction Survey 1)	30	1	0.5	15
Parents (Satisfaction Survey 2)	30	1	0.5	15
Teachers (Satisfaction Survey 1)	30	1	0.5	15

Type of respondents	Estimated number of respondents	Estimated number of responses per respondent	Average burden hours per response	Estimated total burden hours requested
Teachers (Satisfaction Survey 2)	30	1	0.5	15
Total	410			637.5

Request for comments: Written comments and/or suggestions from the public and affected agencies are invited on one or more of the following points: (1) Whether the proposed collection of information is necessary for the proper performance of the function of the agency, including whether the information will have practical utility; (2) the accuracy of the agency's estimate of the burden of the proposed collection of information, including the validity of the methodology and the assumptions used; (3) ways to enhance the quality, utility, and clarity of the information to be collected; and (4) ways to minimize the burden of the collection of information on those who are to respond, including the use of appropriate automated, electronic, mechanical, or other technological collection techniques or other forms of information technology.

FOR FURTHER INFORMATION CONTACT: To request more information on the proposed project or to obtain a copy of the data collection plans and instruments, contact Dr. Catherine Sasek, Coordinator, Science Education Program, Office of Science Policy and Communications, National Institute on Drug Abuse, 6001 Executive Blvd, Room 5237, Bethesda, MD 20892, or call non-toll-free number (301) 443–6071; fax (301) 443–6277; or by e-mail to *csasek@nida.nih.gov.*

Comments due Date: Comments regarding this information collection are best assured of having their full effect is received within 60 days of the date of this publication.

Dated: December 1, 2004.

Laura Rosenthal,

Associate Director for Management, National Institute for Drug Abuse.

[FR Doc. 04–26881 Filed 12–7–04; 8:45 am]

BILLING CODE 4140–01–M

DEPARTMENT OF HEALTH AND HUMAN SERVICES

National Institutes of Health

National Institute of Environmental Health Sciences; Division of Extramural Research and Training; Proposed Collection; Comment Request; Hazardous Waste Worker Training

SUMMARY: In compliance with the requirement of section 3506(c)(2)(A) of the Paperwork Reduction Act of 1995, for opportunity for public comment on proposed data collection projects, the National Institute of Environmental Health Sciences (NIEHS), the National Institutes of Health (NIH) will publish periodic summaries of proposed projects to be submitted to the Office of Management and Budget (OMB) for review and approval.

Proposed Collection

Title: Hazardous Waste Worker Training—42 CFR part 65.

Type of Information Collection Request: Revision of OMB No. 0925–0348 and expiration date February 28, 2005.

Need and Use of Information Collection: This request for OMB review and approval of the information collection is required by regulation 42 CFR 65(a)(6).

The National Institute of Environmental Health Sciences (NIEHS) was given major responsibility for initiating a worker safety and health training program under section 126 of the Superfund Amendments and Reauthorization Act of 1986 (SARA) for hazardous waste workers and emergency responders. A network of non-profit organizations that are committed to protecting workers and their communities by delivering high-quality, peer-reviewed safety and health curricula to target populations of hazardous waste workers and emergency responders has been developed. In seventeen years (FY 1987–2004), the NIEHS Worker Training program has successfully supported 20 primary grantees that have trained more than 1.2 million workers across the country and presented over 68,000 classroom and hands-on training courses, which have accounted for nearly 18 million contact hours of actual training. Generally, the grant will initially be for one year, and subsequent continuation awards are also for one year at a time. Grantees must submit a separate application to have the support continued for each subsequent year. Grantees are to provide information in accordance with S65.4 (a), (b), (c) and 65.6(a) on the nature, duration, and purpose of the training, selection criteria for trainees' qualifications and competency of the project director and staff, cooperative agreements in the case of joint applications, the adequacy of training plans and resources, including budget and curriculum, and response to meeting training criteria in OHSA's Hazardous Waste Operations and Emergency Response Regulations (29 CFR 1910.120). As a cooperative agreement, there are additional requirements for the progress report section of the application. Grantees are to provide their information in hard copy as well as enter information into the WETP Grantee Data Management System. The information collected is used by the Director through officers, employees, experts, and consultants to evaluate applications based on technical merit to determine whether to make awards.

Frequency of Response: Biannual.

Affected Public: Non-profit organizations.

Type of Respondents: Grantees.

The annual reporting burden is as follows:

Estimated Number of Respondents: 18.

Estimated Number of Responses per Respondent: 2.

Average Burden Hours Per Response: 10.

Estimated Total Annual Burden Hours Requested: 360.

The annualized cost to respondents is estimated at: $10,764. There are no Capital Costs, Operating Costs and/or Maintenance Costs to report.

Request for Comments: Written comments and/or suggestions from the public and affected agencies should address one or more of the following points: (1) Evaluate whether the proposed collection of information is necessary for the proper performance of

the function of the agency, including whether the information will have practical utility; (2) evaluate the accuracy of the agency's estimate of the burden of the proposed collection of information, including the validity of the methodology and assumptions used; (3) enhance the quality, utility, and clarity of the information to be collected; and (4) minimize the burden of the collection of information on those who are to respond, including the use of appropriate automated, electronic, mechanical, or other technological collection techniques or other forms of information technology.

FOR FURTHER INFORMATION CONTACT: To request more information on the proposed project or to obtain a copy of the data collection plans and instruments, contact: Joseph T. Hughes, Jr., Director, Worker Education and Training Branch, Division of Extramural Research and Training, NIEHS, P.O. Box 12233, Research Triangle Park, NC 27709 or call non-toll-free number (919) 541–0217 or e-mail your request, including your address to *wetp@niehs.nih.gov*.

Comments Due Date: Comments regarding this information collection are best assured of having their full effect if received within 60-days of the date of this publication.

Dated: November 21, 2004.

Richard A. Freed,

NIEHS, Associate Director for Management.

[FR Doc. 04–26886 Filed 12–7–04; 8:45 am]

BILLING CODE 4140–01–M

DEPARTMENT OF HEALTH AND HUMAN SERVICES

National Institutes of Health

National Cancer Institute; Notice of Closed Meeting

Pursuant to section 10(d) of the Federal Advisory Committee Act, as amended (5 U.S.C. Appendix 2), notice is hereby given of the following meeting.

The meeting will be closed to the public in accordance with the provisions set forth in sections 552b(c)(4) and 552b(c)(6), Title 5 U.S.C., as amended. The grant applications and the discussions could disclose confidential trade secrets or commercial property such as patentable material, and personal information concerning individuals associated with the grant applications, the disclosure of which would constitute a clearly unwarranted invasion of personal privacy.

Name of Committee: National Cancer Institute Special Emphasis Panel, Spore in Breast Cancer.

Date: February 8–10, 2005.

Time: 8 a.m. to 5 p.m..

Agenda: To review and evaluate grant applications.

Place: Hilton Washington 1919 Connecticut Avenue, NW., Washington, DC 20009.

Contact Person: Shamala K. Srinivas, PhD., Scientific Review Administrator, Grants Review Branch, Division of Extramural Activities, National Cancer Institute, National Institutes of Health, 6116 Executive Boulevard, Room 8133, Bethesda, MD 20892; (301) 594–1224.

(Catalogue of Federal Domestic Assistance Program Nos. 93.392, Cancer Construction; 93.393, Cancer Cause and Prevention Research; 93.394, Cancer Detection and Diagnosis Research; 93.395, Cancer Treatment Research; 93.396, Cancer Biology Research; 93.397, Cancer Centers Support; 93.398, Cancer Research Manpower; 93.399, Cancer Control, National Institutes of Health, HHS)

Dated: November 30, 2004.

LaVerne Y. Stringfield,

Director, Office of Federal Advisory Committee Policy.

[FR Doc. 04–26895 Filed 12–7–04; 8:45 am]

BILLING CODE 4140–01–M

DEPARTMENT OF HEALTH AND HUMAN SERVICES

National Institutes of Health

National Cancer Institute; Notice of Closed Meeting

Pursuant to section 10(d) of the Federal Advisory Committee Act, as amended (5 U.S.C. Appendix 2), notice is hereby given of the meeting of the President's Cancer Panel.

The meeting will be closed to the public in accordance with the provisions set forth in section 552b(c)(9)(B), Title 5 U.S.C., as amended, because the premature disclosure of information and the discussions would likely to significantly frustrate implementation of recommendations.

Name of Committee: President's Cancer Panel.

Date: December 14, 2004.

Time: 3 p.m. to 5 p.m.

Agenda: The Panel will discuss the future focuses of the Panel with direction bearing on prepublication manuscripts on Translating Research into Clinical Practice. These manuscripts have been provided by their authors with the understanding that the Panel will not break prepublication embargo conditions.

Place: National Cancer Institute, National Institutes of Health, 31 Center Drive, Building 31, Room 3A18, Bethesda, MD 20892 (Teleconference).

Contact Person: Maureen O. Wilson, PhD, Executive Secretary, National Cancer Institute, National Institutes of Health, 31 Center Drive, Building 31, Room 3A18, Bethesda, MD 20892, (301) 496–1148.

This meeting is being published less than 15 days prior to the meeting due to scheduling conflicts.

Information is also available on the Institute's/Center's home page: *deainfo.nci.nih.gov/advisory/pcp/pcp.htm,* where an agenda and any additional information for the meeting will be posted when available.

(Catalogue of Federal Domestic Assistance Program Nos. 93.392, Cancer Construction; 93.393, Cancer Cause and Prevention Research; 93.394, Cancer Detection and Diagnosis Research; 93.395, Cancer Treatment Research; 93.396, Cancer Biology Research; 93.397, Cancer Centers Support; 93.398, Cancer Research Manpower; 93.399, Cancer Control, National Institutes of Health, HHS)

Dated: November 30, 2004.

LaVerne Y. Stringfield,

Director, Office of Federal Advisory Committee Policy.

[FR Doc. 04–26898 Filed 12–7–04; 8:45 am]

BILLING CODE 4140–01–M

DEPARTMENT OF HEALTH AND HUMAN SERVICES

National Institutes of Health

National Institute of Neurological Disorders and Stroke; Notice of Closed Meetings

Pursuant to section 10(d) of the Federal Advisory Committee Act, as amended (5 U.S.C. Appendix 2), notice is hereby given of the following meetings.

The meetings will be closed to the public in accordance with the provisions set forth in sections 552b(c)(4) and 552b(c)(6), Title 5 U.S.C., as amended. The grant applications and the discussions could disclose confidential trade secrets or commercial property such as patentable material, and personal information concerning individuals associated with the grant applications, the disclosures of which would constitute a clearly unwarranted invasion of personal privacy.

Name of Committee: National Institute of Neurological Disorders and Stroke Special Emphasis Panel, Multiple Sclerosis (MS) Review.

Date: December 20–21, 2004.

Time: 7:30 a.m. to 3 p.m.

Agenda: To review and evaluate grant applications.

Place: Bethesda Marriott—Pooks Hill, 5151 Pooks Hill Road, Bethesda, MD 20814.

Contact Person: Katherine Woodbury, PhD, Scientific Review Administrator, Scientific Review Branch, NINDS/NIH/DHHS,

Neuroscience Center, 6001 Executive Blvd. Suite 3208, MSC 9529, Bethesda, MD 20892–9529, (301) 496–5980, *kw47o@nih.gov.*

Name of Committee: National Institute of Neurological Disorders and Stroke Special Emphasis Panel, National Centers for Neurofibromatosis Research.

Date: January 7, 2005.

Time: 8 a.m. to 5 p.m.

Agenda: To review and evaluate grant applications.

Place: Ritz-Carlton Hotel at Pentagon City, 1250 South Hayes Street, Arlington, VA 22202.

Contact Person: W. Ernest Lyons, PhD, Scientific Review Administrator, Scientific Review Branch, NINDS/NIH/DHHS, Neuroscience Center, 6001 Executive Blvd., Suite 3208, MSC 9529, Bethesda, MD 20892–9529, (301) 496–4056.

(Catalogue of Federal Domestic Assistance Program Nos. 93.853, Clinical Research Related to Neurological Disorders; 93.854, Biological Basis Research in the Neurosciences, National Institutes of Health, HHS)

Dated: December 1, 2004.

LaVerne Y. Stringfield,

Director, Office of Federal Advisory Committee Policy.

[FR Doc. 04–26883 Filed 12–7–04; 8:45 am]

BILLING CODE 4140–01–M

DEPARTMENT OF HEALTH AND HUMAN SERVICES

National Institutes of Health

National Institute of Neurological Disorders and Stroke; Notice of Closed Meeting

Pursuant to section 10(d) of the Federal Advisory Committee Act, as amended (5 U.S.C. Appendix 2), notice is hereby given of the following meeting.

The meeting will be closed to the public in accordance with the provisions set forth in sections 552b(c)(4) and 552b(c)(6), Title 5 U.S.C., as amended. The grant applications and the discussions could disclose confidential trade secrets or commercial property such as patentable material, and personal information concerning individuals associated with the grant applications, the disclosure of which would constitute a clearly unwarranted invasion of personal privacy.

Name of Committee: National Institute of Neurological Disorders and Stroke Special Emphasis Panel, Microarray Consortium.

Date: December 8, 2004.

Time: 8:30 a.m. to 5 p.m.

Agenda: To review and evaluate grant applications.

Place: The Jefferson Hotel, 1200 Sixteenth Street, NW., Washington DC, 20036.

Contact Person: Richard D. Crosland, PhD, Scientific Review Administrator, Scientific Review Branch, Division of Extramural Research, NINDS/NIH/DHHS/Neuroscience Center, 6001 Executive Blvd., Suite 3208, MSC 9529, Bethesda, MD 20892–9529, (301) 594–0635, *rc218u@nih.gov.*

This notice is being published less than 15 days prior to the meeting due to the timing limitations imposed by the review and funding cycle.

(Catalogue of Federal Domestic Assistance Program Nos. 93.853, Clinical Research Related to Neurological Disorders; 93.854, Biological Basis Research in the Neurosciences, National Institutes of Health, HHS)

Dated: November 30, 2004.

LaVerne Y. Stringfield,

Director, Office of Federal Advisory Committee Policy.

[FR Doc. 04–26888 Filed 12–7–04; 8:45 am]

BILLING CODE 4140–01–M

DEPARTMENT OF HEALTH AND HUMAN SERVICES

National Institutes of Health

National Institute on Drug Abuse; Notice of Closed Meeting

Pursuant to section 10(d) of the Federal Advisory Committee Act, as amended (5 U.S.C. Appendix 2), notice is hereby given of the following meeting.

The meeting will be closed to the public in accordance with the provisions set forth in sections 552b(c)(4) and 552b(c)(6), Title 5 U.S.C., as amended. The grant applications and the discussions could disclose confidential trade secrets or commercial property such as patentable material, and personal information concerning individuals associated with the grant applications, the disclosures of which would constitute a clearly unwarranted invasion of personal privacy.

Name of Committee: National Institute on Drug Abuse Special Emphasis Panel, Program Project.

Date: December 9, 2004.

Time: 1:30 p.m. to 3:30 p.m.

Agenda: To review and evaluate grant applications.

Place: National Institutes of Health, 6101 Executive Boulevard, Rockville, MD 20852 (Telephone Conference Call).

Contact Person: Mark Swieter, PhD, Health Scientist Administrator, Office of Extramural Affairs, National Institute on Drug Abuse, National Institutes of Health, DHHS, 6101 Executive Boulevard, Suite 220, Bethesda, MD 20892–8401, (301) 435–1389.

This notice is being published less than 15 days prior to the meeting due to the timing limitations imposed by the review and funding cycle.

(Catalogue of Federal Domestic Assistance Program Nos. 93.277, Drug Abuse Scientist Development Award for Clinicians, Scientist Development Awards, and Research Scientist Awards; 93.278, Drug Abuse National Research Service Awards for Research Training; 93.279, Drug Abuse Research Programs, National Institutes of Health, HHS)

Dated: November 30, 2004.

LaVerne Y. Stringfield,

Director, Office of Federal Advisory Committee Policy.

[FR Doc. 04–26890 Filed 12–7–04; 8:45 am]

BILLING CODE 4140–01–M

DEPARTMENT OF HEALTH AND HUMAN SERVICES

National Institutes of Health

National Institute of Allergy and Infectious Diseases; Notice of Closed Meeting

Pursuant to section 10(d) of the Federal Advisory Committee Act, as amended (5 U.S.C. appendix 2), notice is hereby given of the following meeting.

The meetings will be closed to the public in accordance with the provisions set forth in sections 552b(c)(4) and 552b(c)(6), Title 5 U.S.C., as amended. The contract proposals and the discussions could disclose confidential trade secrets or commercial property such as patentable material, and personal information concerning individuals associated with the contract proposals, the disclosure of which would constitute a clearly unwarranted invasion of personal privacy.

Name of Committee: National Institute of Allergy and Infectious Diseases Special Emphasis Panel, HIV Clinical Research Management Support.

Date: January 10–11, 2005.

Time: 8 a.m. to 5 p.m.

Agenda: To review and evaluate contract proposals.

Place: Key Bridge Marriott, 1401 Lee Highway, Arlington, VA 22209.

Contact Person: Nancy B. Saunders, PhD, Scientific Review Administrator, Scientific Review Program, Division of Extramural Activities, National Institutes of Health/NIAID, 6700B Rockledge Drive, Room 3134, Bethesda, MD 20892–7616, (301) 435–3569, *nsaunders@niaid.nih.gov.*

(Catalogue of Federal Domestic Assistance Program Nos. 93.855, Allergy, Immunology, and Transplantation Research; 93.856, Microbiology and Infectious Diseases Research, National Institutes of Health, HHS)

Dated: November 30, 2004.

LaVerne Y. Stringfield,

Director, Office of Federal Advisory Committee Policy.

[FR Doc. 04–26891 Filed 12–7–04; 8:45 am]

BILLING CODE 4140–01–M

DEPARTMENT OF HEALTH AND HUMAN SERVICES

National Institutes of Health

National Institute of Child Health and Human Development; Notice of Closed Meeting

Pursuant to section 10(d) of the Federal Advisory Committee Act, as amended (5 U.S.C. Appendix 2), notice is hereby given of the following meeting.

The meeting will be closed to the public in accordance with the provisions set forth in sections 552b(c)(4) and 552b(c)(6), Title 5 U.S.C., as amended. The grant applications and the discussions could disclose confidential trade secrets or commercial property such as patentable material, and personal information concerning individuals associated with the grant applications, the disclosure of which would constitute a clearly unwarranted invasion of personal privacy.

Name of Committee: National Institute of Child Health and Human Development Special Emphasis Panel, Career Development Applications.

Date: December 14, 2004.

Time: 10:30 a.m. to 11:30 a.m.

Agenda: To review and evaluate grant applications.

Place: National Institutes of Health, 6100 Executive Boulevard, Rockville, MD 20852 (Telephone Conference Call).

Contact Person: Anne Krey, Scientific Review Administrator, Division of Scientific Review, National Institute of Child Health and Human Development, National Institutes of Health, Bethesda, MD 20892, (301) 435–6908.

This notice is being published less than 15 days prior to the meeting due to the timing limitations imposed by the review and funding cycle.

(Catalogue of Federal Domestic Assistance Program Nos. 93.864, Population Research; 93.865, Research for Mothers and Children; 93.929, Center for Medical Rehabilitation Research; 93.209, Contraception and Infertility Loan Repayment Program, National Institutes of Health, HHS)

Dated: November 30, 2004.

LaVerne Y. Stringfield,

Director, Office of Federal Advisory Committee Policy.

[FR Doc. 04–26892 Filed 12–7–04; 8:45 am]

BILLING CODE 4140–01–M

DEPARTMENT OF HEALTH AND HUMAN SERVICES

National Institutes of Health

National Institute of Allergy and Infectious Diseases; Notice of Closed Meeting

Pursuant to section 10(d) of the Federal Advisory Committee Act, as amended (5 U.S.C. Appendix 2), notice is hereby given of the following meeting.

The meeting will be closed to the public in accordance with the provisions set forth in sections 552b(c)(4) and 552b(c)(6), Title 5 U.S.C., as amended. The grant applications and the discussions could disclose confidential trade secrets or commercial property such as patentable material, and personal information concerning individuals associated with the grant applications, the disclosure of which would constitute a clearly unwarranted invasion of personal privacy.

Name of Committee: National Institute of Allergy and Infectious Diseases Special Emphasis Panel, Biodefense and Emerging Infectious Disease Research Opportunities.

Date: December 21, 2004.

Time: 12 p.m. to 3 p.m.

Agenda: To review and evaluate grant applications.

Place: NIAID, 6700 B Rockledge Drive, 3129, Bethesda, MD 20892 (Telephone Conference Call).

Contact Person: Eleazar Cohen, PhD, Scientific Review Administrator, Scientific Review Program, Division of Extramural Activities, NIAID/NIH/DHHS, Room 3129, 6700 B Rockledge Drive, Bethesda, MD 208992, (301) 435–3564, *ec17w@nih.gov.*

This notice is being published less than 15 days prior to the meeting due to the timing limitations imposed by the review and funding cycle.

(Catalogue of Federal Domestic Assistance Program Nos. 93.855, Allergy, Immunology, and Transplantation Research; 93.856, Microbiology and Infectious Diseases Research, National Institutes of Health, HHS)

Dated: November 30, 2004.

LaVerne Y. Stringfield,

Director, Office of Federal Advisory Committee Policy.

[FR Doc. 04–26893 Filed 12–7–04; 8:45 am]

BILLING CODE 4140–01–M

DEPARTMENT OF HEALTH AND HUMAN SERVICES

National Institutes of Health

National Institute on Alcohol Abuse and Alcoholism; Notice of Closed Meetings

Pursuant to section 10(d) of the Federal Advisory Committee Act, as amended (5 U.S.C. appendix 2), notice is hereby given of the following meetings.

The meetings will be closed to the public in accordance with the provisions set forth in sections 552b(c)(4) and 552b(c)(6), Title 5 U.S.C., as amended. The grant applications and the discussions could disclose confidential trade secrets or commercial property such as patentable material, and personal information concerning individuals associated with the grant applications, the disclosure of which would constitute a clearly unwarranted invasion of personal privacy.

Name of Committee: National Institute on Alcohol Abuse and Alcoholism Special Emphasis Panel, ZAA1 HH (04) Grant Applications Review.

Date: December 9, 2004.

Time: 10:30 a.m. to 1 p.m.

Agenda: To review and evaluate grant applications.

Place: The River Inn, 924 25th Street, NW., Washington, DC 20037.

Contact Person: Jeffrey I. Toward, PhD, Scientific Review Administrator, National Institutes of Health, National Institute on Alcohol Abuse and Alcoholism, Extramural Project Review Branch, OSA, 5635 Fishers Lane, Bethesda, MD 20892–9304;, (301) 435–5337, *jtoward@mail.nih.gov.*

This notice is being published less than 15 days prior to the meeting due to the timing limitations imposed by the review and funding cycle.

Name of Committee: National Institute on Alcohol Abuse and Alcoholism Special Emphasis Panel, ZAA1 HH (05)–R 13 Conference Grant Applications Review.

Date: December 15, 2004.

Time: 10 a.m. to 11:30 a.m.

Agenda: To review and evaluate grant applications.

Place: National Institutes of Health, Fishers Building/NIAAA, 5635 Fishers Lane, Suite 3146, Bethesda, MD 20892 (Telephone Conference Call).

Contact Person: Jeffrey I. Toward, PhD, Scientific Review Administrator, National Institutes of Health, National Institute on Alcohol Abuse and Alcoholism, Extramural Project Review Branch, OSA, 5635 Fishers Lane, Bethesda, MD 20892–9304; (301) 435–5337, *jtoward@mail.nih.gov.*

This notice is being published less than 15 days prior to the meeting due to the timing limitations imposed by the review and funding cycle.

(Catalogue of Federal Domestic Assistance Program Nos. 93.271, Alcohol Research Career Development Awards for Scientists and Clinicians; 93.272, Alcohol National Research Service Awards for Research Training; 93.273, Alcohol Research Programs; 93.891, Alcohol Research Center Grants, National Institutes of Health, HHS)

Dated: November 30, 2004.

LaVerne Y. Stringfield,

Director, Office of Federal Advisory Committee Policy.

[FR Doc. 04–26894 Filed 12–7–04; 8:45 am]

BILLING CODE 4140–01–M

DEPARTMENT OF HEALTH AND HUMAN SERVICES

National Institutes of Health

National Institute of Allergy and Infectious Diseases; Notice of Closed Meeting

Pursuant to section 10(d) of the Federal Advisory Committee Act, as amended (5 U.S.C. Appendix 2), notice is hereby given of the following meeting.

The meeting will be closed to the public in accordance with the provisions set forth in sections 552b(c)(4) and 552b(c)(6), Title 5 U.S.C., as amended. The contract proposals and the discussions could disclose confidential trade secrets or commercial property such as patentable material, and personal information concerning individuals associated with the contract proposals, the disclosure of which would constitute a clearly unwarranted invasion of personal privacy.

Name of Committee: National Institute of Allergy and Infectious Diseases Special Emphasis Panel, Scientific and Technical Support for NIAID.

Date: December 15, 2004.

Time: 12 p.m. to 4 p.m.

Agenda: To review and evaluate contract proposals.

Place: National Institutes of Health, Rockledge 6700, 6700B Rockledge Drive, Bethesda, MD 20817 (Telephone Conference Call).

Contact Person: Robert C. Goldman, PhD, Scientific Review Administrator, Division of AIDS, NIH/NIAID/DAIDS/CCRB, Room 5226, 6700–B Rockledge Drive, MSC 7624, Bethesda, MD 20892–7616.

This notice is being published less than 15 days prior to the meeting due to the urgent need to meeting timing limitations imposed by the intramural research review cycle.

(Catalogue of Federal Domestic Assistance Program Nos. 93.855, Allergy, Immunology, and Transplantation Research; 93.856, Microbiology and Infectious Diseases Research, National Institutes of Health, HHS)

Dated: November 30, 2004.

LaVerne Y. Stringfield,

Director, Office of Federal Advisory Committee Policy.

[FR Doc. 04–26896 Filed 12–7–04; 8:45 am]

BILLING CODE 4140–01–M

DEPARTMENT OF HEALTH AND HUMAN SERVICES

National Institutes of Health

National Institute of Allergy and Infectious Diseases; Notice of Closed Meeting

Pursuant to section 10(d) of the Federal Advisory Committee Act, as amended (5 U.S.C. Appendix 2), notice is hereby given of the following meeting.

The meeting will be closed to the public in accordance with the provisions set forth in sections 552b(c)(4) and 552b(c)(6), Title 5 U.S.C., as amended. The grant applications and the discussions could disclose confidential trade secrets or commercial property such as patentable material, and personal information concerning individuals associated with the grant applications, the disclosure of which would constitute a clearly unwarranted invasion of personal privacy.

Name of Committee: Allergy, Immunology, and Transplantation Research Committee, Allergy, Immunology and Transplantation Research Review Committee.

Date: January 25–27, 2005.

Time: 9 a.m. to 5 p.m.

Agenda: To review and evaluate grant applications.

Place: Hilton Monterey, 1000 Aguajita Road, Monterey, CA 93940.

Contact Person: Quirijn Vos. PhD, Scientific Review Administrator, Scientific Review Program, Division of Extramural Activities, National Institutes of Health/NIAID, 6700B Rockledge Drive, MSC 7616, Bethesda, MD 20892–7616, (301) 451–2666, *qvos@niaid.nih.gov.*

(Catalogue of Federal Domestic Assistance Program Nos. 93.855, Allergy, Immunology, and Transplantation Research; 93.856, Microbiology and Infectious Diseases Research, National Institutes of Health, HHS)

Dated: November 30, 2004.

LaVerne Y. Stringfield,

Director, Office of Federal Advisory Committee Policy.

[FR Doc. 04–26897 Filed 12–7–04; 8:45 am]

BILLING CODE 4140–01–M

DEPARTMENT OF HEALTH AND HUMAN SERVICES

National Institutes of Health

National Institute of Allergy and Infectious Diseases; Notice of Informational Session

The National Institute of Allergy and Infectious Diseases announces that an informational Session for individuals representing groups considering submission of applications in response to NIAID's RFA number AI–04–045 (*http://grants.nih.gov/grants/guide/rfa-files/RFA-AI-04-045.html*), entitled ''CENTERS FOR MEDICAL COUNTERMEASURES AGAINST RADIATION,'' will be held on December 15, 2004, from 1 p.m. to 5 p.m. e.s.t.

The meeting will be held in Room 2C–13, 10401 Fernwood Drive, Bethesda, MD 20817. Staff from the NIH Centers for Medical Countermeasures Against Radiation Program and from the Division of Extramural Activities will provide information about the Program and how to apply and will be available to answer questions pertinent to preparing applications in response to this RFA. Advance registration is not required.

This meeting will also be available through a live broadcast allowing for questions from offsite locations. Please check *http://videocast.nih.gov/FutureEvents.asp* for videocast information regarding this event. A videotape of the meeting will be made available for future viewing at *http://videocast.nih.gov/PastEvents.asp.*

For questions or further information contact: Helen Quill, Ph.D., Basic Immunology Branch, Division of Allergy, Immunology and Transplantation, National Institute of Allergy and Infectious Diseases, Room 3013, MSC–6601, 6610 Rockledge Drive, Bethesda, MD 20892–6601, telephone: 301–496–7551, Fax: 301–480–2381, e-mail: *hquill@niaid.nih.gov.*

Dated: November 30, 2004.

Lynn C. Hellinger,

Associate Director for Management and Operations, NIAID.

[FR Doc. 04–26900 Filed 12–7–04; 8:45 am]

BILLING CODE 4140–01–M

DEPARTMENT OF HEALTH AND HUMAN SERVICES

National Institutes of Health

Center for Scientific Review; Notice of Closed Meetings

Pursuant to section 10(d) of the Federal Advisory Committee Act, as amended (5 U.S.C. Appendix 2), notice is hereby given of the following meetings.

The meetings will be closed to the public in accordance with the provisions set forth in sections 552b(c)(4) and 552b(c)(6), Title 5 U.S.C., as amended. The grant applications and the discussions could disclose confidential trade secrets or commercial property such as patentable material, and personal information concerning

individuals associated with the grant applications, the disclosure of which would constitute a clearly unwarranted invasion of personal privacy.

Name of Committee: Center for Scientific Review Special Emphasis Panel, Rehabilitative Sciences Ad Hoc Review Panel.

Date: December 13, 2004.

Time: 11 a.m. to 12:30 p.m.

Agenda: To review and evaluate grant applications.

Place: National Institutes of Health, 6701 Rockledge Drive, Bethesda, MD 20892 (Telephone Conference Call).

Contact Person: Jo Pelham, BA, Scientific Review Administrator, Center for Scientific Review, National Institutes of Health, 6701 Rockledge Drive, Room 4102, MSC 7814, Bethesda, MD 20892, (301) 435–1786, *pelhamj@csr.nih.gov.*

This notice is being published less than 15 days prior to the meeting due to the timing limitations imposed by the review and funding cycle.

Name of Committee: Center for Scientific Review Special Emphasis Panel, Neural Drug Development.

Date: December 15, 2004.

Time: 10:30 a.m. to 12 p.m.

Agenda: To review and evaluate grant applications.

Place: National Institutes of Health, 6701 Rockledge Drive, Bethesda, MD 20892 (Telephone Conference Call).

Contact Person: Mary Custer, PhD, Scientific Review Administrator, Center for Scientific Review, National Institutes of Health, 6701 Rockledge Drive, Room 4148, MSC 7850, Bethesda, MD 20892, (301) 435–1164, *custerm@csr.nih.gov.*

This notice is being published less than 15 days prior to the meeting due to the timing limitations imposed by the review and funding cycle.

Name of Committee: Center for Scientific Review Special Emphasis Panel, Dermal Absorption Special Emphasis Panel.

Date: December 15, 2004.

Time: 4 p.m. to 6 p.m.

Agenda: To review and evaluate grant applications.

Place: National Institutes of Health, 6701 Rockledge Drive, Bethesda, MD 20892 (Telephone Conference Call).

Contact Person: Steve J. Zullo, PhD, Scientific Review Administrator, Center for Scientific Review, National Institutes of Health, 6701 Rockledge Drive, Room 4192, MSC 7849, Bethesda, MD 20892, (301) 435–2810, *zullost@csr.nih.gov.*

This notice is being published less than 15 days prior to the meeting due to the timing limitations imposed by the review and funding cycle.

Name of Committee: Center for Scientific Review Special Emphasis Panel, Neurodegeneration Cystokeleton and Synaptic Function.

Date: December 15, 2004.

Time: 12 p.m. to 1 p.m.

Agenda: To review and evaluate grant applications.

Place: National Institutes of Health, 6701 Rockledge Drive, Bethesda, MD 20892 (Telephone Conference Call).

Contact Person: Joanne T Fujii, PhD, Scientific Review Administrator, Center for Scientific Review, National Institutes of Health, 6701 Rockledge Drive, Room 5204, MSC 7850, Bethesda, MD 20892, (301) 435–1178, *fujiij@csr.nih.gov.*

This notice is being published less than 15 days prior to the meeting due to the timing limitations imposed by the review and funding cycle.

(Catalogue of Federal Domestic Assistance Program Nos. 93.306, Comparative Medicine; 93.333, Clinical Research, 93.306, 93.333, 93.337, 93.393–93.396, 93.837–93.844, 93.846–93.878, 93.892, 93.893, National Institutes of Health, HHS)

Dated: December 1, 2004.

LaVerne Y. Stringfield,

Director, Office of Federal Advisory Committee Policy.

[FR Doc. 04–26882 Filed 12–7–04; 8:45 am]

BILLING CODE 4140–01–M

DEPARTMENT OF HEALTH AND HUMAN SERVICES

National Institutes of Health

Center for Scientific Review; Amended Notice of Meeting

Notice if hereby given of a change in the meeting of the Center for Scientific Review Special Emphasis Panel, December 3, 2004, 10:30 a.m. to December 3, 2004, 11:30 a.m. National Institutes of Health, 6701 Rockledge Drive, Bethesda, MD 20892, which was published in the **Federal Register** November 29, 2004, 69 FR 69379.

The meeting will be held December 9, 2004. The meeting time and location remain the same. The meeting is closed to the public.

Dated: December 1, 2004.

LaVerne Y. Stringfield,

Director, Office of Federal Advisory Committee Policy.

[FR Doc. 04–26884 Filed 12–7–04; 8:45 am]

BILLING CODE 4140–01–M

DEPARTMENT OF HEALTH AND HUMAN SERVICES

National Institutes of Health

Center for Scientific Review; Amended Notice of Meeting

Notice is hereby given of a change in the meeting of the Center for Scientific Review Special Emphasis Panel, November 16, 2004, 12 p.m. to November 16, 2004, 4 p.m., One Washington Circle Hotel, One Washington Circle, Washington, DC, 20037 which was published in the **Federal Register** on November 3, 2004, 69 FR 64078–64081.

The meeting will be held December 10, 2004. The meeting time and location remain the same. The meeting is closed to the public.

Dated: November 30, 2004.

LaVerne Y. Stringfield,

Director, Office of Federal Advisory Committee Policy.

[FR Doc. 04–26887 Filed 12–7–04; 8:45 am]

BILLING CODE 4140–01–M

DEPARTMENT OF HEALTH AND HUMAN SERVICES

National Institutes of Health

Center for Scientific Review; Notice of Closed Meeting

Pursuant to section 10(d) of the Federal Advisory Committee Act, as amended (5 U.S.C. Appendix 2), notice is hereby given of the following meetings.

The meetings will be closed to the public in accordance with the provisions set forth in sections 552b(c)(4) and 552b(c)(6), Title 5 U.S.C., as amended. The grant applications and the discussions could disclose confidential trade secrets or commercial property such as patentable material, and personal information concerning individuals associated with the grant applications, the disclosure of which would constitute a clearly unwarranted invasion of personal privacy.

Name of Committee: Center for Scientific Review Special Emphasis Panel, Antibiotics.

Date: December 1, 2004.

Time: 11 a.m. to 12 p.m.

Agenda: To review and evaluate grant applications.

Place: National Institutes of Health, 6701 Rockledge Drive, Bethesda, MD 20892, (Telephone Conference Call).

Contact Person: Marian Wachtel, PhD, Scientific Review Administrator, Center for Scientific Review, National Institutes of Health, 6701 Rockledge Drive, Room 3208, MSC 7858, Bethesda, MD 20892, (301) 435–1148, *wachetlm@csr.nih.gov.*

This notice is being published less than 15 days prior to the meeting due to the timing limitations imposed by the review and funding cycle.

Name of Committee: Center for Scientific Review Special Emphasis Panel, IVF and Genetic Testing.

Date: December 3, 2004.

Time: 12 p.m. to 1 p.m.

Agenda: To review and evaluate grant applications.

Place: National Institutes of Health, 6701 Rockledge Drive, Bethesda, MD 20892, (Telephone Conference Call).

Contact Person: Lee S. Mann, PhD, Scientific Review Administrator, Center for

Scientific Review, National Institutes of Health, 6701 Rockledge Drive, Room 3186, MSC 7848, Bethesda, MD 20892, 301–435–0677, *mannl@csr.nih.gov.*

This notice is being published less than 15 days prior to the meeting due to the timing limitations imposed by the review and funding cycle.

Name of Committee: Center for Scientific Review Special Emphasis Panel, Visual System SBIR SEP.

Date: December 6, 2004.

Time: 4 p.m. to 5 p.m.

Agenda: To review and evaluate grant applications.

Place: National Institutes of Health, 6701 Rockledge Drive, Bethesda, MD 20892, (Telephone Conference Call).

Contact Person: Jerome R. Wujek, PhD, Scientific Review Administrator, Center for Scientific Review, National Institutes of Health, 6701 Rockledge Drive, Room 5194, MSC 7846, Bethesda, MD 20892, (301) 435–2507, *wujekjer@csr.nih.gov.*

This notice is being published less than 15 days prior to the meeting due to the timing limitations imposed by the review and funding cycle.

Name of Committee: Center for Scientific Review Special Emphasis Panel, ODCS Special Review Panel.

Date: December 15, 2004.

Time: 11 a.m. to 12 p.m.

Agenda: To review and evaluate grant applications.

Place: National Institutes of Health, 6701 Rockledge Drive, Bethesda, MD 20892, (Telephone Conference Call).

Contact Person: J. Terrell Hoffeld, PhD, DDS, Dental Officer, USPHS, Center for Scientific Review, National Institutes of Health, 6701 Rockledge Drive, Room 4116, MSC 7816, Bethesda, MD 20892, (301) 435–1781, *hoffeldt@csr.nih.gov.*

This notice is being published less than 15 days prior to the meeting due to the timing limitations imposed by the review and funding cycle.

(Catalogue of Federal Domestic Assistance Program Nos. 93.306, Comparative Medicine; 93.333, Clinical Research, 93.306, 93.333, 93.337, 93.393–93.396, 93.837–93.844, 93.846–93.878, 93.892, 93.893, National Institutes of Health, HHS)

Dated: November 30, 2004.

LaVerne Y. Stringfield,

Director, Office of Federal Advisory Committee Policy.

[FR Doc. 04–26889 Filed 12–7–04; 8:45 am]

BILLING CODE 4140–01–M

DEPARTMENT OF HEALTH AND HUMAN SERVICES

Public Health Service

National Toxicology Program

The National Toxicology Program (NTP) Center for the evaluation of risks to Human Reproduction (CERHR) announces plans for future evaluation of styrene; requests public comments on this chemical; and solicits the nominations of scientists qualified to serve on an expert panel.

SUMMARY: The CERHR plans to convene an expert panel to evaluate the scientific evidence regarding the potential reproductive and/or developmental toxicity associated with exposure to styrene. The expert panel will consist of approximately 8–12 scientists, selected for their scientific expertise in various aspects of reproductive and developmental toxicology and other relevant areas of science. The CERHR invites the submission of public comments on styrene and the nomination of scientists to serve on the expert panel for its evaluation (*see* below). This meeting is tentatively scheduled for 2005 although the exact date and location are not yet established. As plans are finalized, they will be announced in the **Federal Register** and posted on the CERHR Web site (*http://cerhr.niehs.nih.gov*). CERHR expert panel meetings are open to the public with time scheduled for oral public comment.

Evaluation of Styrene

Styrene (ethenylbenzene; CAS RN: 100–42–5) is a high production volume chemical used in the production of polystyrene resins and as a co-polymer with acrylonitrile and 1,3 butadiene. Styrene is found in items such as foam cups, dental fillings, matrices for ion exchange filters, construction materials, and boats. It is also used in protective coatings, reinforced glass fiber, agricultural products, and as a food additive. The public can be exposed to styrene through ingesting food or drink that has been in contact with styrene polymers or through inhalation of polluted air and cigarette smoke. CERHR selected styrene for expert panel evaluation because of: (1) Public concern about styrene exposure and (2) recently available exposure studies.

Request for Public Comment on Styrene

The CERHR invites input from the public and other interested parties on styrene including toxicology information from completed and ongoing studies, information on planned studies, and information about current production levels, human exposure, use patterns, and environmental occurrence. Information and comments should be forwarded to the CERHR at P.O. Box 12233, National Institute of Environmental Health Sciences, MD EC–32, Research Triangle Park, NC 27709 (mail), (919) 541–3455 (phone), (919) 316–4511 (fax), or *shelby@niehs.nih.gov* (e-mail). Information and comments received by 45 days from the publication date of this notice will be made available to the CERHR staff and the expert panel for consideration in the evaluation and posted on the CERHR Web site.

Request for the Nomination of Scientists for the Expert Panel

The CERHR invites nominations of qualified scientists to serve on the expert panel. Panelists are primarily drawn from the CERHR Expert Registry and/or the nomination of other scientists who meet the criteria for listing in that registry which include: Formal academic training and experience in a relevant scientific field, publications in peer-reviewed journals, membership in relevant professional societies, certification by an appropriate scientific board or other entities, and participation in similar committee activities. Expert panel members are required to sign a conflict of interest form in accordance with Federal Advisory Committee Act Guidelines (5 U.S.C. Appendix 2).

All panel members serve as individual experts in their specific areas of expertise and not as representatives of their employers or other organizations. Scientists on the expert panel will be selected to represent a wide range of expertise including, but not limited to, developmental toxicology, reproductive toxicology, epidemiology, general toxicology, pharmacokinetics, exposure assessment, and biostatistics. Nominations received by 45 days from the publication date of this notice will be considered for this panel and for inclusion in the CERHR Expert Registry. Nominations should include contact information and current curriculum vitae (if possible) and be forwarded to the CERHR at the address given above.

Background Information About the CERHR

The NTP established the CERHR in June 1998 (**Federal Register**, December 14, 1998: Volume 63, Number 239, page 68782). The CERHR is a publicly accessible resource for information about adverse reproductive and/or developmental health effects associated with exposure to environmental and/or occupational exposures. Expert panels conduct scientific evaluations of agents selected by the CERHR in public forums.

Information about CERHR and its process for nominating agents for review or scientists for its expert registry can be obtained from its Web site (*http://cerhr.niehs.nih.gov*) or by contacting Dr. Michael Shelby, CERHR Director (contact information provided above).

The CERHR selects chemicals for evaluation based upon several factors, including production volume, extent of human exposure, public concern, and extent of the database on reproductive or developmental toxicity studies.

CERHR follows a formal, multi-step process for review and evaluation of selected chemicals. The formal evaluation process was published in the **Federal Register** (July 16, 2001: Volume 66, Number 136, pages 37047–37048) and is available on the CERHR Web site under ''About CERHR'' or in printed copy from the CERHR.

Dated: November 29, 2004.

Samuel H. Wilson,

Deputy Director, National Institute of Environmental Health Sciences.

[FR Doc. 04–26885 Filed 12–7–04; 8:45 am]

BILLING CODE 4140–01–P

DEPARTMENT OF HOMELAND SECURITY

Coast Guard

[USCG–2001–9267]

Shipboard Technology Evaluation Program; Programmatic Environmental Assessment and Finding of No Significant Impact

AGENCY: Coast Guard, DHS.

ACTION: Notice of availability.

SUMMARY: The Coast Guard announces the availability of the Final Programmatic Environmental Assessment (PEA) and Finding of No Significant Impact (FONSI) that evaluated the potential environmental impacts resulting from the implementation of the Shipboard Technology Evaluation Program (STEP). The purpose of STEP is to facilitate the development of effective ballast water treatment technologies to protect U.S. waters against the unintentional introduction of nonindigenous species via ballast water discharges. STEP will create more options for vessels seeking alternatives to ballast water exchange as they manage their ballast water.

ADDRESSES: Comments and material received from the public, as well as documents mentioned in this notice as being available in the docket, are part of docket USCG–2001–9267 and are available for inspection or copying at the Docket Management Facility, U.S. Department of Transportation, room PL–401, 400 Seventh Street, SW., Washington, DC, between 9 a.m. and 5 p.m., Monday through Friday, except Federal holidays. You may also find this docket on the Internet at *http://dms.dot.gov.*

FOR FURTHER INFORMATION CONTACT: If you have questions on this program call Mr. Bivan Patnaik, Project Manager at (202) 267–1744 or e-mail: *bpatnaik@comdt.uscg.mil.* If you have questions on viewing or submitting material to the docket, call Andrea M. Jenkins, Program Manager, Docket Operations, Department of Transportation, telephone 202–366–0271.

SUPPLEMENTARY INFORMATION: In accordance with the National Environmental Policy Act of 1969 (Section 102(2)(c)), as implemented by the Council on Environment Quality regulations (40 CFR parts 1500–1508) and Coast Guard Policy for Considering Environmental Impacts (COMDTINST M16475.1D), the Coast Guard prepared a final PEA and FONSI for implementing STEP.

Response to Comments

The Coast Guard received one comment on the draft PEA. The commenter stated that the Coast Guard made inaccurate statements regarding the effectiveness of ozone as a ballast water treatment technology and the corrosion issues associated with the use of ozone.

Although the Coast Guard commends the ongoing efforts of developers of ozone technologies as an effective treatment for ballast water, we disagree with the commenter. Based on our review of peer-reviewed published literature and documents submitted by the commenter, it is premature to conclude that ozone will effectively remove all organisms or that corrosion is not an issue. Therefore, no changes were made to the final PEA. We look forward to the results of future research on the effectiveness of ozone technologies and we encourage the commenter to consider participation in STEP.

Programmatic Environmental Assessment

The final PEA identified and examined those reasonable alternatives needed to effectively implement STEP. The final PEA analyzed the no action alternative and two action alternatives that could fulfill the purpose and need of STEP. The final PEA is a program document meant to provide a broad environmental review of a Federal agency's (Coast Guard) national program. In this case, the final PEA provided a broad, general view of the potential environmental impacts that could be anticipated by implementing STEP. Specifically, the final PEA considered potential effects to the natural and human environments including: fish; marine mammals; invertebrates; microbes and plankton; submerged and emergent species; threatened and endangered species; essential fish habitats; and various socioeconomic resources. The final PEA could not foresee all possible specific operational sites or cumulative environmental impacts as a result of implementing any of the action alternatives. However, once specific operational sites and individual shipboard ballast water treatment technologies have been identified, these technologies will undergo a more specific environmental review (tiering). This environmental review of individual shipboard ballast water treatment technologies and specific operational sites will result in the issuance of either: (1) Categorical Exclusion; (2) Finding of No Significant Impact (FONSI) after an Environmental Assessment (EA); or (3) Environmental Impact Statement (EIS).

Dated: November 18, 2004.

Joseph J. Angelo,

Director of Standards, Marine Safety, Security & Environmental Protection.

[FR Doc. 04–26863 Filed 12–7–04; 8:45 am]

BILLING CODE 4910–15–P

DEPARTMENT OF THE INTERIOR

Canyons of the Ancients National Monument Advisory Committee; Notice of Renewal

AGENCY: Bureau of Land Management (BLM), Colorado State Office, Interior.

ACTION: Notice of renewal for the Canyons of the Ancients National Monument Advisory Committee.

SUMMARY: This notice is published in accordance with Section 9(a)(2) of the Federal Advisory Committee Act of 1972, Public Law 92–463. Notice is hereby given that the Secretary of the Interior has renewed the Bureau of Land Management's Canyons of the Ancients National Monument Advisory Committee.

The purpose of the Committee is to provide advice and counsel to the Bureau of Land Management, through the Canyons of the Ancients National Monument Manager, regarding the development and implementation of a management plan for public lands within the Monument area.

FOR FURTHER INFORMATION CONTACT: Melanie Wilson Gore, Intergovernmental Affairs (640), Bureau

of Land Management, 1620 L Street, NW., Room 406 LS, Washington, DC 20036, telephone (202) 452–0377.

Certification Statement

I hereby certify that the renewal of the Canyons of the Ancients National Monument Advisory Committee is necessary and in the public interest in connection with the Secretary of the Interior's responsibilities to manage the lands, resources, and facilities administered by the Bureau of Land Management.

Dated: November 18, 2004.

Gale A. Norton,

Secretary of the Interior.

[FR Doc. 04–26869 Filed 12–7–04; 8:45 am]

BILLING CODE 4310–10–M

DEPARTMENT OF THE INTERIOR

Assistant Secretary—Policy, Management and Budget; Performance Review Board Appointments

AGENCY: Assistant Secretary—Policy, Management and Budget, Interior.

ACTION: Notice of appointments.

SUMMARY: This notice provides the names of individuals who have been appointed to serve as members of the Department of the Interior Performance Review Board. The Departmental Performance Review Board considers the initial rating and award recommendations for all Senior Executive Service members for the Department of the Interior.

EFFECTIVE DATE: These nominations are effective on December 8, 2004.

FOR FURTHER INFORMATION CONTACT: Sandra Streets, Acting Director, Office of Human Resources, Office of the Secretary, Department of the Interior, 1849 C Street, NW., Washington, DC 20240; telephone: (202) 208–6761.

SUPPLEMENTARY INFORMATION: The purpose of the Departmental Performance Review Board is to consider the initial rating and award recommendations; review all documentation, including any written response by the executive being rated and any comments provided by a higher-level reviewer; conduct whatever additional review it deems necessary; and make written recommendations to the appropriate appointing authority regarding final performance ratings of record and the awarding of performance bonuses, Secretary's executive leadership awards, and performance-based pay rate adjustments. Assistant Secretaries/Equivalent Officials nominate Senior Executive Service members in their organizations each year to serve on the Performance Review Board. The Executive Resources Board makes final selection of members. Appointment to the Performance Review Board is for one year, which is renewable.

The Department has appointed the following individuals to serve on the Department of the Interior 2004 Performance Review Board:

Marti Allbright, Director, Take Pride in America
Karen Baker, Deputy Chief, Office of Administrative Policy and Services
K. Lynn Bennett, State Director, Idaho
Robert Bennett, State Director, Wyoming
Elaine Brong, State Director, Oregon
Robert Brown, Associate Director for Administration and Budget
Melvin Burch, Regional Fiduciary Trust Administrator
Chad Calvert, Deputy Assistant Secretary—Land and Minerals Management
Scott Cameron, Deputy Assistant Secretary for Performance, Accountability and Human Resources
Debbie Clark, Deputy Assistant Secretary—Indian Affairs
David Cohen, Deputy Assistant Secretary for Insular Affairs
Lucy Q. Denett, Associate Director for Minerals Revenue Management
Lawrence Finfer, Deputy Director, Office of Policy Analysis
Samuel Hamilton, Regional Director—Atlanta
Jeanette Hanna, Regional Director, Eastern Oklahoma
Abraham Haspel, Assistant Deputy Secretary
Pamela Haze, Deputy Director, Office of Budget
Paul Henne, Assistant Director, Business Management and Operations
Paul Hoffman, Deputy Assistant Secretary—Fish and Wildlife and Parks
James Hughes, Deputy Director, Programs and Policy
Fay Iudicello, Director, Office of Executive Secretariat and Regulatory Affairs
Daniel Jorjani, Chief of Staff and Counselor to the Assistant Secretary, Policy, Management and Budget
Christopher Kearney, Deputy Assistant Secretary for Policy and International Affairs
Suzette Kimball, Regional Director, Eastern Region
Ronnie Levine, Assistant Director, Information Resources Management
Mark Limbaugh, Deputy Commissioner (External and Intergovernmental Affairs)
Jane Lyder, Legislative Counselor
Julie MacDonald, Deputy Assistant Secretary—Fish and Wildlife and Parks
Pamela Malam, Regional Geographer—Eastern Region
Robert McKenna, Chief Information Officer
Tom Melius, Assistant Director—External Affairs
Patricia Morrison, Principal Deputy Assistant Secretary—Land and Minerals Management
Donald Murphy, Deputy Director, National Park Service
Michael Nedd, State Director, Eastern States
Wayne Nordwall, Regional Director, Western
Michael Olsen, Counselor to the Assistant Secretary
Fredrick Ore Deputy Director, Operations
Glenda Owens, Deputy Director, Office of Surface Mining
Christopher Oynes, Regional Director, Gulf of Mexico OCS Region
Mamie Parker, Assistant Director—Fisheries and Habitat Conservation
Jason Peltier, Deputy Assistant Secretary—Water and Science
Ernie Quintana, Field Director, Midwest Area (Omaha)
Kirk Rodgers, Regional Director, Mid Pacific Region
Christine Schabacker, Counselor to the Assistant Secretary—Water and Science
Denise Sheehan, Assistant Director—Budget, Planning and Human Resources
Karen Siderelis, Geographic Information Officer
George Skibine, Director, Office of Indian Gaming Management
Stanley Speaks, Regional Director, Northwest
Karen Taylor-Goodrich, Associate Director, Resource and Visitor Protection
Willie Taylor, Director, Office of Environmental Policy Compliance
Barbara Wainman, Chief, Office of Communication
Thomas Weimer, Principal Deputy Assistant Secretary—Water and Science
Kathleen Wheeler, Deputy Chief Human Capital Officer

Dated: November 22, 2004.

Sandra Streets,

Acting Director, Office of Human Resources.

[FR Doc. 04–26912 Filed 12–7–04; 8:45 am]

BILLING CODE 4310–RF–P

DEPARTMENT OF THE INTERIOR

Fish and Wildlife Service

Endangered Species Recovery Permit Applications

AGENCY: Fish and Wildlife Service, Interior.

ACTION: Notice of receipt of permit applications.

SUMMARY: The following applicants have applied for a scientific research permit to conduct certain activities with endangered species pursuant to section 10(a)(1)(A) of the Endangered Species Act (16 U.S.C. 1531 *et seq.*). The U.S. Fish and Wildlife Service (Awe'') solicits review and comment from local, State, and Federal agencies, and the public on the following permit requests.

DATES: Comments on these permit applications must be received on or before January 7, 2005.

ADDRESSES: Written data or comments should be submitted to the U.S. Fish and Wildlife Service, Chief, Endangered Species, Ecological Services, 911 NE. 11th Avenue, Portland, Oregon 97232–4181 (fax: 503–231–6243). Please refer to the respective permit number for each application when submitting comments. All comments received, including names and addresses, will become part of the official administrative record and may be made available to the public.

FOR FURTHER INFORMATION CONTACT: Documents and other information submitted with these applications are available for review, subject to the requirements of the Privacy Act and Freedom of Information Act, by any party who submits a written request for a copy of such documents within 30 days of the date of publication of this notice to the address above (telephone: 503–231–2063). Please refer to the respective permit number for each application when requesting copies of documents.

SUPPLEMENTARY INFORMATION:

Permit No. TE–038109

Applicant: Theodore Lee, San Diego, California.

The permittee requests an amendment to take (harass by survey) the southwestern willow flycatcher (*Empidonax traillii extimus*); take (survey, capture, release, and collect and sacrifice) the Conservancy fairy shrimp (*Branchinecta conservatio*), the longhorn fairy shrimp (*Branchinecta longiantenna*), the vernal pool tadpole shrimp (*Lepidurus packardi*), the Riverside fairy shrimp (*Streptocephalus wootoni*), and the San Diego fairy shrimp (*Branchinecta sandiegonensis*); and take (survey, capture, and release) the arroyo toad (*Bufo californicus*) in conjunction with surveys throughout the range of each species in California for the purpose of enhancing their survival.

Permit No. TE–777965

Applicant: LSA Associates, Inc., Irvine, California.

The permittee requests an amendment to take (capture and collect and sacrifice) the Conservancy fairy shrimp (*Branchinecta conservatio*), the longhorn fairy shrimp (*Branchinecta longiantenna*), the Riverside fairy shrimp (*Streptocephalus wootoni*), and the San Diego fairy shrimp (*Branchinecta sandiegonensis*); and take (survey, capture, and release) the arroyo toad (*Bufo californicus*) in conjunction with surveys throughout the range of each species in California for the purpose of enhancing their survival.

Permit No. TE–094807

Applicant: Lorena Solorzano-Vincent, Oakland, California.

The applicant requests a permit to take (capture and collect and sacrifice) the Conservancy fairy shrimp (*Branchinecta conservatio*), the longhorn fairy shrimp (Branchinecta longiantenna), the Riverside fairy shrimp (*Streptocephalus wootoni*), and the San Diego fairy shrimp (*Branchinecta sandiegonensis*) in conjunction with surveys throughout the range of each species in California and Oregon for the purpose of enhancing their survival.

Permit No. TE–094308

Applicant: Shay Lawrey, Lake Arrowhead, California.

The applicant requests a permit to take (harass by survey) the southwestern willow flycatcher (*Empidonax traillii extimus*), take (locate and monitor nests) the least Bell's vireo (*Vireo bellii pusillus*), and take (capture, handle, and translocate) the San Bernardino kangaroo rat (*Dipodomys merriami parvus*) in conjunction with surveys in San Bernardino County, California, for the purpose of enhancing their survival.

Permit No. TE–063608

Applicant: Brian Lohstroh, San Diego, California.

The permittee requests an amendment to take (harass by survey) the southwestern willow flycatcher (*Empidonax traillii extimus*) in conjunction with surveys throughout the range of the species in California for the purpose of enhancing its survival.

Permit No. TE–807078

Applicant: Point Reyes Bird Observatory, Stinson Beach, California.

The permittee requests an amendment to take (harass by survey and locate and monitor nests) the southwestern willow flycatcher (*Empidonax traillii extimus*), and take (locate and monitor nests) the least Bell's vireo (*Vireo bellii pusillus*) in conjunction with surveys throughout the range of each species in California for the purpose of enhancing their survival.

Permit No. TE–054120

Applicant: Russell Huddleston, Sacramento, California.

The permittee requests an amendment to remove/reduce to possession (collect) *Cordylanthus mollis* ssp. *mollis* (soft bird's-beak), *Eriogonum apricum* var. *apricum* (lone buckwheat), *Orcuttia viscida* (Sacramento orcutt grass), *Tucuoria mucronata* (Solano Grass), *Lasthenia conjugens* (Contra Costa goldfields), *Trifolium amoenum* (showy Indian clover), *Cirsium hydrophilum* var. *hdrophilum* (Suisun thistle), and *Pseudobahia bahiifolia* (Hartweg's golden sunburst) in conjunction with surveys throughout the range of each species in California for the purpose of enhancing their survival.

Permit No. TE–095526

Applicant: Christopher Guilliams, San Diego, California.

The applicant requests a permit to take (capture and collect and sacrifice) the Conservancy fairy shrimp (*Branchinecta conservatio*), the longhorn fairy shrimp (*Branchinecta longiantenna*), the Riverside fairy shrimp (*Streptocephalus wootoni*), the San Diego fairy shrimp (*Branchinecta sandiegonensis*), and the vernal pool tadpole shrimp (*Lipidurus packardi*); and take (survey by pursuit) the Quino checkerspot butterfly (*Euphydryas editha quino*) in conjunction with surveys throughout the range of each species in California for the purpose of enhancing their survival.

Permit No. TE–095858

Applicant: Arianne Glagola, Anaheim, California.

The applicant requests a permit to take (survey by pursuit) the Quino checkerspot butterfly (*Euphydryas editha quino*) in conjunction with surveys throughout the range of the species in California for the purpose of enhancing its survival.

Permit No. TE–095868

Applicant: David Kisner, Santa Barbara, California.

The applicant requests a permit to take (harass by survey and locate and monitor nests) the southwestern willow flycatcher (*Empidonax traillii extimus*) and the California least tern (*Sterna antillarum browni*), and take (locate and monitor nests) the least Bell's vireo (*Vireo bellii pusillus*) in conjunction with surveys throughout the range of each species in California for the purpose of enhancing their survival.

Permit No. TE–094983

Applicant: Santa Barbara Botanic Garden, Santa Barbara, California.

The applicant requests a permit to remove/reduce to possession (collect) *Arabis hoffmannii* (Hoffmann's rock-cress), *Arenaria paludicola* (Marsh sandwort), *Astragauls pycnostachyus* var. *lanosisimus* (Ventura marsh milk-vetch), *Berberis nevinii* (Nevin's barberry), *Berberis pinnata* ssp. *insularis* (island barberry), *Castilleha grisea* (San Clemente Island Indian paintbrush), *Castilleja mollis* (soft-leaved Indian paintbrush), *Caulanthus californicus* (California jewelflower), *Cirsium fontinale* var. *obispoense* (Chorro Creek bog thistle), *Cirsium loncholepis* (La Graciosa thistle), *Clarkia speciosa* ssp. *immaculate* (Pismo clarkia), *Cordylanthus maritimus* ssp. *maritimus* (salt marsh bird's-beak), *Deinandra increscens* ssp. *villosa* (Gaviota tarplant), *Delphinium variegatum* ssp. *kinkiense* (San Clemente Island larkspur), *Dudleya traskiae* (Santa Barbara Island dudleya), *Eremalche kernensis* (Kern mallow), *Eriodictyon altissimum* (Indian Knob mountain balm), *Eriodictyon capitatum* (Lompoc yerba santa), *Erysimum menziesii* ssp. *yadonii* (Menzies' wall-flower), *Galium buxifolium* (island bedstraw), *Gilia tenuiflora* ssp. *hoffmannii* (Hoffman's slender-flowered gilia), *Layia carnosa* (beach layia), *Lithophragma maximum* (San Clemente Island woodland star), *Lotus dendroideus* var. *traskiae* (San Clemente Island broom), *Lupinus nipomensis* (Nipomo Mesa lupine), *Malacothamnus clementinus* (San Clemente Island bush mallow), *Malacothamnus fasciculatus* var. *nesioticus* (Santa Cruz Island bush mallow), *Malacothrix indecora* (Santa Cruz Island malacothrix), *Malacothrix squalida* (island malacothrix), *Pentachaeta lyonii* (Lyon's pentachaeta), *Rorippa gambellii* (Gambel's watercress), *Sibara filifoia* (Santa Cruz Island rock-cress), and *Thysanocarpus conchuliferus* (Santa Cruz Island fringepod) in conjunction with surveys throughout the range of each species in California for the purpose of enhancing their survival.

Permit No. TE–095561

Applicant: Bertin Anderson, Blythe, California.

The applicant requests a permit to take (harass by survey) the southwestern willow flycatcher (Empidonax traillii extimus) and the Yuma clapper rail (Rallus longirostris yumanensis) in conjunction with surveys in Riverside County, California, for the purpose of enhancing their survival.

We solicit public review and comment on each of these recovery permit applications.

Dated: November 15, 2004.

Paul Henson,

Acting Manager, California/Nevada Operations Office, Fish and Wildlife Service.

[FR Doc. 04–26911 Filed 12–7–04; 8:45 am]

BILLING CODE 4310–55–P

DEPARTMENT OF THE INTERIOR

Fish and Wildlife Service

Endangered and Threatened Wildlife and Plants; Initiation of a 5-Year Review of Topeka Shiner (*Notropis topeka*)

AGENCY: Fish and Wildlife Service, Interior.

ACTION: Notice of review.

SUMMARY: The U.S. Fish and Wildlife Service (Service) announces a 5-year review of the Topeka shiner (*Notropis topeka*), a species of fish native to streams of the central plains region, under section 4(c)(2)(A) of the Endangered Species Act of 1973 (Act) (16 U.S.C. 1531 *et seq.*). A 5-year review is a periodic process conducted to ensure that the listing classification of a species is accurate. A 5-year review is based on the best scientific and commercial data available at the time of the review; therefore, we are requesting submission of any such information on the Topeka shiner that has become available since its original listing as an endangered species in 1998 (63 FR 69008). Based on the results of this 5-year review, we will make the requisite finding under section 4(c)(2)(B) of the Act.

DATES: To allow us adequate time to conduct this review, we must receive your information no later than February 7, 2005. However, we will continue to accept new information about any listed species at any time.

ADDRESSES: Submit information to the U.S. Fish and Wildlife Service, Kansas Ecological Services Field Office, 315 Houston Street, Suite E, Manhattan, Kansas 66502. Information received in response to this notice and review will be available for public inspection, by appointment, during normal business hours, at the above address.

FOR FURTHER INFORMATION CONTACT: Vernon Tabor at the above address, by telephone (785) 539–3474, by facsimile (785) 539–8567, or by e-mail *Vernon_Tabor@fws.gov.*

SUPPLEMENTARY INFORMATION: Under the Act, the Service maintains a list of endangered and threatened wildlife and plant species at 50 CFR 17.11 (for animals) and 17.12 (for plants). Section 4(c)(2)(A) of the Act requires that we conduct a review of listed species at least once every 5 years. Then, on the basis of such reviews under section 4(c)(2)(B), we determine whether or not any species should be removed from the list (delisted), or reclassified from endangered to threatened or from threatened to endangered. Delisting a species must be supported by the best scientific and commercial data available and only considered if such data substantiate that the species is neither endangered nor threatened for one or more of the following reasons—(1) the species is considered extinct; (2) the species is considered to be recovered; and/or (3) the original data available when the species was listed, or the interpretation of such data, were in error. Any change in Federal classification would require a separate rulemaking process. The regulations in 50 CFR 424.21 require that we publish a notice in the **Federal Register** announcing those species currently under active review. This notice announces our active review of the Topeka shiner currently listed as an endangered species.

Public Solicitation of New Information

To ensure that the 5-year review is complete and based on the best scientific and commercial information, we are soliciting new information from the public, concerned governmental agencies, Tribes, the scientific community, industry, environmental entities, and any other interested parties concerning the status of Topeka shiner.

The 5-year review considers the best scientific and commercial data and all new information that has become available since the listing determination or most recent status review. Categories of requested information include—(A) Species biology, including but not limited to, population trends, distribution, abundance, demographics, and genetics; (B) habitat conditions, including but not limited to, amount, distribution, and suitability; (C) conservation measures that have been

implemented that benefit the species; (D) threat status and trends; and (E) other new information, data, or corrections, including but not limited to, taxonomic or nomenclatural changes, identification of erroneous information contained in the List, and improved analytical methods.

If you wish to provide information for this 5-year review, you may submit your comments and materials to the Kansas Ecological Services Field Office (*see* **ADDRESSES** section). Our practice is to make comments, including names and home addresses of respondents, available for public review during regular business hours. Respondents may request that we withhold a respondent's identity, as allowable by law. If you wish us to withhold your name or address, you must state this request prominently at the beginning of your comment. However, we will not consider anonymous comments. To the extent consistent with applicable law, we will make all submissions from organizations or businesses, and from individuals identifying themselves as representatives or officials of organizations or businesses, available for public inspection in their entirety. Comments and materials received will be available for public inspection, by appointment, during normal business hours (*see* **ADDRESSES** section).

Authority This document is published under the authority of the Endangered Species Act of 1973, as amended (16 U.S.C. 1531 *et seq.*).

Dated: November 24, 2004.

Benjamin Tuggle,

Regional Director, Denver, Colorado.

[FR Doc. 04–26910 Filed 12–7–04; 8:45 am]

BILLING CODE 4310–55–P

DEPARTMENT OF THE INTERIOR

Bureau of Land Management

[NV–010–04–1020–DF]

Notice of Intent To Prepare an Environmental Impact Statement on Sensitive Bird Species in Three Grazing Allotments in Elko County, NV

AGENCY: Bureau of Land Management, Interior.

ACTION: Notice of Intent (NOI) to prepare an Environmental Impact Statement (EIS).

SUMMARY: In accordance with section 102(2)(C) of the National Environmental Policy Act of 1969 and regulations at 40 CFR Parts 1500–1508, the Bureau of Land Management, Elko Field Office, will be preparing an Environmental Impact Statement (EIS) on the effects of three multiple use decisions on sensitive bird species in three grazing allotments in Elko County, Nevada.

DATES: This Notice initiates the 30-day public scoping period. Within 30 days of the publication of this Notice, a public scoping meeting will be held at the BLM Elko Field Office, 3900 East Idaho Street, Elko, Nevada, to familiarize interested publics with the project and to identify issues and concerns to be addressed in the EIS. The scoping meeting will be announced through the local news media, newsletters, and the BLM Web site at *www.nv.blm.gov/Elko* at least 15 days prior to the event. Any additional public meetings, if necessary, will be announced similarly. Comments on issues can also be submitted in writing to the address listed below and for 30 days after publication of this Notice in the **Federal Register.** In addition to the ongoing public participation process, formal opportunities for public participation will be provided upon publication of the BLM Draft EIS.

ADDRESSES: You may submit comments by any of the following methods:

—E-mail: *rlister@nv.blm.gov*

—Fax: (775) 753–0255

—Mail: Send to the attention of the Sensitive Species EIS Project Manager, BLM Elko Field Office, 3900 East Idaho Street, Elko, NV 89801

Comments, including names and street addresses of respondents, will be available for public review at the above address during regular business hours, 7:30 a.m. to 4:30 p.m., Monday through Friday, except holidays, and may be published as part of the EIS. Individual respondents may request confidentiality. If you wish to withhold your name or street address from public review or from disclosure under the Freedom of Information Act, you must state this prominently at the beginning of your written comment. However, we will not consider anonymous comments. Such requests will be honored to the extent allowed by law. All submissions from organizations or businesses, and from individuals identifying themselves as representatives or officials of organizations or businesses, will be available for public inspection in their entirety.

FOR FURTHER INFORMATION CONTACT: Ray Lister, Project Manager at the Elko Field Office, 3900 E. Idaho Street, Elko, NV 89801. Telephone: (775) 753–0200. E-mail: *rlister@nv.blm.gov.*

SUPPLEMENTARY INFORMATION: The BLM is preparing this EIS to comply with a minute order issued by the Honorable Howard D. McKibben, U.S. District Judge, District of Nevada, on August 18, 2004 (CV–N–03–197–HDM(VPC)). The order followed a hearing on a complaint against three final multiple use decisions (*Western Watersheds Project and Committee for the High Desert* v. *Clinton R. Oke, Assistant Field Manager, Elko Field Office, et al.*). The final decisions, which were left intact by the judge, are for the Sheep Allotment Complex, Big Springs Allotment and Owyhee Allotment. The Sheep Allotment Complex and Big Springs Allotments are located in the southeastern portion of Elko County, Nevada, and the Owyhee Allotment is in the northwest portion of Elko County.

The order is to prepare the EIS with respect to burrowing owls, raptors and sage grouse on the Sheep Complex and the Owyhee Allotment, and sage grouse on the Big Springs Allotment. BLM will evaluate the impact of livestock grazing, to the extent applicable, to these sensitive bird species and consider springs, seeps, riparian areas and upland habitat.

Preparation of the EIS will require coordination with the Nevada Department of Wildlife (NDOW). NDOW previously supplied information and commented on allotment evaluations on which the multiple use decisions were based. NDOW will be requested to supply additional information on the species to be analyzed and invited to participate in preparation of the EIS, possibly as a cooperating agency.

Dated: September 23, 2004.

Helen M. Hankins,

Field Manager.

[FR Doc. 04–26870 Filed 12–7–04; 8:45 am]

BILLING CODE 4310–HC–P

DEPARTMENT OF THE INTERIOR

National Park Service

National Register of Historic Places; Notification of Pending Nominations

Nominations for the following properties being considered for listing in the National Register were received by the National Park Service before November 13, 2004.

Pursuant to § 60.13 of 36 CFR part 60 written comments concerning the significance of these properties under the National Register criteria for evaluation may be forwarded by United States Postal Service, to the National Register of Historic Places, National Park Service, 1849 C St., NW., 2280, Washington, DC 20240; by all other carriers, National Register of Historic

Places, National Park Service,1201 Eye St., NW., 8th floor, Washington DC 20005; or by fax, 202–371–6447. Written or faxed comments should be submitted by December 23, 2004.

Carol D. Shull,

Keeper of the National Register of Historic Places.

MARYLAND

Baltimore Independent city

Arcadia—Beverly Hills Historic District, Moravia Rd.—Belair Rd.—Herring Run Park—Harford Rd., Baltimore (Independent City), 04001375

Baltimore and Ohio Locust Point Grain Terminal Elevator, 1700 Beason St., Baltimore (Independent City), 04001379

Reservoir Hill Historic District, North Ave.—Madison Ave.—Druid Park Lake Dr.—Mt. Royal Terrace, Baltimore (Independent City), 04001376

West Baltimore Historic District, Old, Roughly bounded by North Ave., Dolphin St., Franklin St. and Fulton Ave., Baltimore (Independent City), 04001374

Carroll County

Bennett—Kelly Farm, 5842 Oakland Rd., Sykesville, 04001378

Scott, Robert and Phyllis, House, 1805 Uniontown Rd., Westminster, 04001377

Howard County

MacAlpine, 3261 Macalpine Rd., Ellicott City, 04001382

Worcester County

Pocomoke City Historic District, Market, Cedar, 2nd, Clarke, Bridge Sts., Linden Ave., Pocomoke City, 04001383

MISSOURI

Greene County

Wilhoit, Edward M. and Della C., House, 903 S. Weller Ave., Springfield, 04001384

St. Louis Independent city

Delaney School, (St. Louis Public Schools of William B. Ittner MPS (AD)) 6138 Virginia Ave., St. Louis (Independent City), 04001385

MONTANA

Cascade County

Belt Commercial Historic District, Castner St., Belt, 04001380

Rosebud County

Howard School, Old MT 10, Forsyth, 04001381

NORTH CAROLINA

Caldwell County

Patterson School Historic District, Along both sides of NC 268 at the jct. with NC 1504, Legerwood, 04001386

Dare County

Midgett, Mattie, Store and House, 4008 S. Virginia Dare Trail, Nags Head, 04001389

Sea Foam Motel, 7111 S. Virginia Dare Trail, Nags Head, 04001392

Duplin County

Faison, William Wright, House, (Duplin County MPS) NC 1304, 0.2 mi. SE of jct. with NC 1354, Bowdens, 04001390

Mallard, John Wesley, House, (Duplin County MPS) NC 1301, 0.25 mi. S of NC 1329, Faison, 04001391

Durham County

East Durham Historic District, (Durham MRA) Roughly bounded by Southern Rwy right-of-way, N. Guthrie Ave. Holloway St., Hyde Park Ave, S. Plum St. and Vale St., Durham, 04001393

Forsyth County

North Cherry Street Historic District, N. Cherry St. bounded by Fourteenth, Twenty-third and Seventeenth St., Lincoln and Pitsburg Ave., Winston-Salem, 04001394

Wake County

Massey Hill High School, 1062 Southern Ave., Fayetteville, 04001387

Seventy-First Consolidated School, 6830 Raeford Rd., Fayetteville, 04001388

TEXAS

Bexar County

Heimann Building, 118 N. Medina St., San Antonio, 04001396

Coke County

Coke County Jail, 6th at Chadbourne, Robert Lee, 04001395

Hidalgo County

Cortez Hotel, 260 S. Texas Ave., Weslaco, 04001397

Travis County

Gethsemane Lutheran Church and Luther Hall (Boundary Increase), 105 W 16th St., Austin, 04001398

A request for removal has been made for the following resources:

MISSOURI

St. Louis County

Busch's Grove 9160 Clayton Rd. Ladue, 82004721

TEXAS

Harris County

Mraz, Bill, Dance Hall 835 W. 34th St. Houston, 98000219

[FR Doc. 04–26959 Filed 12–7–04; 8:45 am]

BILLING CODE 4312–51–P

DEPARTMENT OF JUSTICE

Office of Justice Programs

Agency Information Collection Activities: Proposed Collection; Comments Requested

ACTION: 30-day notice of information collection under review: National Prisoner Statistics—Prison Population Reports: NPS–1A, Midyear Population Counts; NPS–1B, Advance Endyear Population Counts.

The Department of Justice (DOJ), Office of Justice Programs (OJP) has submitted the following information collection request to the Office of Management and Budget (OMB) for review and approval in accordance with the Paperwork Reduction Act of 1995. The proposed information collection is published to obtain comments from the public and affected agencies. This proposed information collection was previously published in the **Federal Register** Volume 69, Number 154, page 48889 on August 11, 2004, allowing for a 60-day comment period.

The purpose of this notice is to allow for an additional 30 days for public comment until January 7, 2005. This process is conducted in accordance with 5 CFR 1320.10.

Written comments and/or suggestions regarding the items contained in this notice, especially the estimated public burden and associated response time, should be directed to the Office of Management and Budget, Office of Information and Regulatory Affairs, Attention Department of Justice Desk Officer, Washington, DC 20503. Additionally, comments may be submitted to OMB via facsimile to (202) 395–5806. Written comments and suggestions from the public and affected agencies concerning the proposed collection of information are encouraged. Your comments should address one or more of the following four points:

—Evaluate whether the proposed collection of information is necessary for the proper performance of the functions of the agency, including whether the information will have practical utility;

—Evaluate the accuracy of the agencies estimate of the burden of the proposed collection of information, including the validity of the methodology and assumptions used;

—Enhance the quality, utility, and clarity of the information to be collected; and

—Minimize the burden of the collection of information on those who are to respond, including through the use of appropriate automated, electronic, mechanical, or other technological collection techniques or other forms of information technology, *e.g.*, permitting electronic submission of responses.

Overview of This Information Collection

(1) *Type of Information Collection:* Extension of a currently approved collection.

(2) *Title of the Form/Collection:* National Prisoner Statistics—Prison Population reports: NPS–1A, Midyear Population Counts; NPS–1B, Endyear Population Counts.

(3) *Agency Form Number, If Any, and the Applicable Component of the Department Sponsoring the Collection:* Form Number: NPS–1A and NPS–1B. Office of Justice Programs, Bureau of Justice Statistics (BJS), Department of Justice.

(4) *Affected Public Who Will Be Asked or Required to Respond, as Well as a Brief Abstract:* Primary: State Departments of Corrections. Others: The Federal Bureau of Prisons. For the NPS–1A form, 51 central reporters (one from each State and the Federal Bureau of Prisons) responsible for keeping records on inmates will be asked to provide information for the following categories:

(a) As of June 30, the number of male and female inmates under their jurisdiction with maximum sentences of more than one year, one year or less; and unsentenced inmates; and

(b) As of June 30, the number of male and female inmates in their custody with maximum sentences of more than one year, one year or less; and unsentenced inmates; and

(c) As of June 30, the number of male and female inmates under their jurisdiction housed in a privately-operated facility, either in state or out of state; and

(d) As of June 30, the number of male and females inmates in their custody by race and Hispanic origin.

For the NPS–1B form, 51 central reporters (one from each and the Federal Bureau of Prisons) responsible for keeping records on inmates will be asked to provide information for the following categories:

(a) As of December 31, the number of male and female inmates under their jurisdiction with maximum sentences of more than one year, one year or less; and unsentenced inmates; and

(b) The number of inmates housed in county or other local authority correctional facilities, or in other state or Federal facilities on December 31, solely to ease prison crowding; and

(c) As of the direct result of state prison crowding during 2001, the number of inmates released via court order, administrative procedure or statute, accelerated release, sentence reduction, emergency release, or other expedited release; and

(d) The aggregate rated, operational, and design capacities, by sex, of each State's correctional facilities at year-end.

The Bureau of Justice Statistics uses this information in published reports and for the U.S. Congress, Executive Office of the President, practitioners, researchers, students, the media, and others interested in criminal justice statistics.

(5) *An estimate of the total number of respondents and the amount of time estimated for an average respondent to respond/reply:* There are approximately 51 respondents each taking an average of 3.0 hours to respond.

(6) *An estimate of the total public burden (in hours) associated with the collection:* There are approximately 153 annual burden hours associated with this collection.

If additional information is required contact: Brenda E. Dyer, Department Clearance Officer, United States Department of Justice, Justice Management Division, Policy and Planning Staff, Patrick Henry Building, Suite 1600, 601 D Street NW., Washington, DC 20530.

Dated: December 2, 2004.

Brenda E. Dyer,

Department Clearance Officer, Department of Justice.

[FR Doc. 04–26907 Filed 12–7–04; 8:45 am]

BILLING CODE 4410–18–P

DEPARTMENT OF JUSTICE

Office of Justice Programs

Agency Information Collection Activities: Proposed Collection; Comments Requested

ACTION: 60-day notice of information collection under review promising programs for substance abuse prevention: Replication and Evaluation Initiative.

The Department of Justice (DOJ), Office of Justice Programs, Office of Juvenile Justice and Delinquency Prevention, has submitted the following information collection request to the Office of Management and Budget (OMB) for review and approval in accordance with the Paperwork Reduction Act of 1995. The proposed information collection is published to obtain comments from the public and affected agencies. Comments are encouraged and will be accepted for ''sixty days'' until February 7, 2005. This process is conducted in accordance with 5 CFR 1320.10.

If you have comments especially on the estimated public burden or associated response time, suggestions, or need a copy of the proposed information collection instrument with instructions or additional information, please contact Dr. Michael Shader, (202) 616–2605, Office of Juvenile Justice and Delinquency Prevention, Office of Justice Programs, United States Department of Justice, 810 Seventh Street NW., Washington, DC 20531.

Written comments and suggestions from the public and affected agencies concerning the proposed collection of information are encouraged. Comments should address one or more of the following four points:

Evaluate whether the proposed collection of information is necessary for the proper performance of the functions of the agency, including whether the information will have practical utility;

Evaluate the accuracy of the agency's estimate of the burden of the proposed collection of information, including the validity of the methodology and assumptions used;

Enhance the quality, utility, and clarity of the information to be collected; and

Minimize the burden of the collection of information on those who are to respond, including through the use of appropriate automated, electronic, mechanical, or other technological collection techniques or other forms of information technology, *e.g.*, permitting electronic submission of responses.

Overview of This Information Collection

(1) *Type of Information Collection:* New Collection.

(2) *The Title of the Form/Collection:* Promising Programs for Substance Abuse Prevention: Replication and Evaluation Initiative.

(3) *The Agency Form Number, If Any, and the Applicable Component of the Department Sponsoring the Collection:* There is no agency form number. Office of Juvenile Justice and Delinquency Prevention, United States Department of Justice.

(4) *Affected Public Who Will Be Asked or Required to Respond, as Well as a Brief Abstract:* Primary: Individuals. Other: Not-for profit. Two substance abuse prevention programs for middle school and alternative high school students will be evaluated for effectiveness by independent evaluators, potentially establishing them as effective programs. Middle schools and high schools will be asked to assist in study implementation.

(5) *An Estimate of the Total Number of Respondents and the Amount of Time Estimated for an Average Respondent to*

Respond/Reply: It is estimated that 7,000 respondents will complete a 35–40 minute survey three times (pre-test, post-test, and one-year follow up post-test) over the next four years.

(6) An estimate of the total burden (in hours) associated with the collection. The estimated total burden to complete the nominations is 12, 600 hours. The average annual hour burden (over four years) is 3,150.

If additional information is required contact: Mrs. Brenda E. Dyer, Clearance Officer, United States Department of Justice, Policy and Planning Staff, Justice Management Division, Suite 1600, Patrick Henry Building, 601 D Street NW., Washington, DC 20530.

Dated: December 2, 2004.

Brenda E. Dyer,

Department Clearance Officer, United States Department of Justice.

[FR Doc. 04–26908 Filed 12–7–04; 8:45 am]

BILLING CODE 4410–18–P

NATIONAL AERONAUTICS AND SPACE ADMINISTRATION

[Notice 04–135]

Notice of Establishment of a NASA Advisory Committee, Pursuant to the Federal Advisory Committee Act, 5 U.S.C. App 1 et seq.

Agency:

National Aeronautics and Space Administration (NASA).

Explanation of Need: The Administrator of the National Aeronautics and Space Administration has determined that the establishment of a NASA Aeronautical Technologies Strategic Roadmap Committee is necessary and in the public interest in connection with the performance of duties imposed upon NASA by law. This determination follows consultation with the Committee Management Secretariat, General Services Administration.

Name of Committee: NASA Aeronautical Technologies Strategic Roadmap Committee.

Purpose and Objective: The Committee will advise the NASA Administrator on providing advanced aeronautical technologies to meet the challenges of next-generation systems in aviation, for civilian and scientific purposes, in our atmosphere and in the atmospheres of other worlds. The Committee will draw on the expertise of its members and other sources to provide its advice and recommendations to the Agency. The Committee will hold meetings and make site visits as necessary to accomplish their responsibilities. The Committee will function solely as an advisory board and will comply fully with the provisions of the Federal Advisory Committee Act.

Lack of Duplication of Resources: The Committee's functions cannot be performed by the agency, another existing committee, or other means such as a public meeting.

Fairly Balanced Membership: The Committee will consist of a balance of experts from within the government, private industry, and academia. In addition, there may be additional experts selected for Subcommittees or Task Forces. Members of the Committee, Subcommittee or Task Forces will be chosen from among industry, academia, and government with recognized knowledge and expertise in specific areas across the NASA portfolio. Total membership will reflect a fairly balanced view.

Duration: Ad hoc.

Responsible NASA Official: Dr. Marc Allen, Advanced Planning and Integration Office, National Aeronautics and Space Administration, 300 E Street, SW., Washington, DC 20546, telephone (202) 358–2373.

P. Diane Rausch,

Advisory Committee Management Officer, National Aeronautics and Space Administration.

[FR Doc. 04–26964 Filed 12–7–04; 8:45 am]

BILLING CODE 7510–13–P

NATIONAL AERONAUTICS AND SPACE ADMINISTRATION

[Notice 04–142]

Notice of Establishment of a NASA Advisory Committee, Pursuant to the Federal Advisory Committee Act, 5 U.S.C. App 1 et seq.

Agency: National Aeronautics and Space Administration (NASA).

Explanation of Need: The Administrator of the National Aeronautics and Space Administration has determined that the establishment of a NASA Search for Earth-like Planets Strategic Roadmap Committee is necessary and in the public interest in connection with the performance of duties imposed upon NASA by law. This determination follows consultation with the Committee Management Secretariat, General Services Administration.

Name of Committee: NASA Search for Earth-like Planets Strategic Roadmap Committee.

Purpose and Objective: The Committee will advise the NASA Administrator on searching for Earth-like planets and habitable environments around other stars using advanced telescopes. The Committee will draw on the expertise of its members and other sources to provide its advice and recommendations to the Agency. The Committee will hold meetings and make site visits as necessary to accomplish their responsibilities. The Committee will function solely as an advisory board and will comply fully with the provisions of the Federal Advisory Committee Act.

Lack of Duplication of Resources: The Committee's functions cannot be performed by the agency, another existing committee, or other means such as a public meeting.

Fairly Balanced Membership: The Committee will consist of a balance of experts from within the government, private industry, and academia. In addition, there may be additional experts selected for Subcommittees or Task Forces. Members of the Committee, Subcommittee or Task Forces will be chosen from among industry, academia, and government with recognized knowledge and expertise in specific areas across the NASA portfolio. Total membership will reflect a fairly balanced view.

Duration: Ad hoc.

Responsible NASA Official: Dr. Marc Allen, Advanced Planning and Integration Office, National Aeronautics and Space Administration, 300 E Street, SW., Washington, DC 20546, telephone (202) 358–2373.

P. Diane Rausch,

Advisory Committee Management Officer, National Aeronautics and Space Administration.

[FR Doc. 04–26971 Filed 12–7–04; 8:45 am]

BILLING CODE 7510–13–P

NATIONAL AERONAUTICS AND SPACE ADMINISTRATION

[Notice (04–137)]

Notice of Establishment of a NASA Advisory Committee, Pursuant to the Federal Advisory Committee Act, 5 U.S.C. App 1 *et seq.*

AGENCY: National Aeronautics and Space Administration (NASA).

Explanation of Need: The Administrator of the National Aeronautics and Space Administration has determined that the establishment of a NASA Earth Science and Applications From Space Strategic Roadmap Committee is necessary and in the public interest in connection with the performance of duties imposed upon

NASA by law. This determination follows consultation with the Committee Management Secretariat, General Services Administration.

Name of Committee: NASA Earth Science and Applications From Space Strategic Roadmap Committee.

Purpose and Objective: The Committee will advise the NASA Administrator on research and technology development to advance Earth observation from space, improvement of scientific understanding, and demonstration of new technologies with the potential to improve future operational systems. The Committee will draw on the expertise of its members and other sources to provide its advice and recommendations to the Agency. The Committee will hold meetings and make site visits as necessary to accomplish their responsibilities. The Committee will function solely as an advisory board and will comply fully with the provisions of the Federal Advisory Committee Act.

Lack of Duplication of Resources: The Committee's functions cannot be performed by the agency, another existing committee, or other means such as a public meeting.

Fairly Balanced Membership: The Committee will consist of a balance of experts from within the government, private industry, and academia. In addition, there may be additional experts selected for Subcommittees or Task Forces. Members of the Committee, Subcommittee or Task Forces will be chosen from among industry, academia, and government with recognized knowledge and expertise in specific areas across the NASA portfolio. Total membership will reflect a fairly balanced view.

Duration: Ad hoc.

Responsible NASA Official: Dr. Marc Allen, Advanced Planning and Integration Office, National Aeronautics and Space Administration, 300 E Street, SW., Washington, DC 20546, telephone (202) 358–2373.

P. Diane Rausch,

Advisory Committee Management Officer, National Aeronautics and Space Administration.

[FR Doc. 04–26966 Filed 12–7–04; 8:45 am]

BILLING CODE 7510–13–P

NATIONAL AERONAUTICS AND SPACE ADMINISTRATION

[Notice (04–134)]

Notice of Establishment of a NASA Advisory Committee, Pursuant to the Federal Advisory Committee Act, 5 U.S.C. App 1 *et seq.*

AGENCY: National Aeronautics and Space Administration (NASA).

Explanation of Need: The Administrator of the National Aeronautics and Space Administration has determined that the establishment of a NASA Education Strategic Roadmap Committee is necessary and in the public interest in connection with the performance of duties imposed upon NASA by law. This determination follows consultation with the Committee Management Secretariat, General Services Administration.

Name of Committee: NASA Education Strategic Roadmap Committee.

Purpose and Objective: The Committee will advise the NASA Administrator on using NASA missions and other activities to inspire and motivate the nation's students and teachers, to engage and educate the public, and to advance the nation's scientific and technological capabilities. The Committee will draw on the expertise of its members and other sources to provide its advice and recommendations to the Agency. The Committee will hold meetings and make site visits as necessary to accomplish their responsibilities. The Committee will function solely as an advisory board and will comply fully with the provisions of the Federal Advisory Committee Act.

Lack of Duplication of Resources: The Committee's functions cannot be performed by the agency, another existing committee, or other means such as a public meeting.

Fairly Balanced Membership: The Committee will consist of a balance of experts from within the government, private industry, and academia. In addition, there may be additional experts selected for Subcommittees or Task Forces. Members of the Committee, Subcommittee or Task Forces will be chosen from among industry, academia, and government with recognized knowledge and expertise in specific areas across the NASA portfolio. Total membership will reflect a fairly balanced view.

Duration: Ad hoc.

Responsible NASA Official: Dr. Marc Allen, Advanced Planning and Integration Office, National Aeronautics and Space Administration, 300 E Street, SW., Washington, DC 20546, telephone (202) 358–2373.

P. Diane Rausch,

Advisory Committee Management Officer, National Aeronautics and Space Administration.

[FR Doc. 04–26963 Filed 12–7–04; 8:45 am]

BILLING CODE 7510–13–P

NATIONAL AERONAUTICS AND SPACE ADMINISTRATION

[Notice 04–141]

Notice of Establishment of a NASA Advisory Committee, Pursuant to the Federal Advisory Committee Act, 5 U.S.C. App 1 *et seq.*

AGENCY: National Aeronautics and Space Administration (NASA).

Explanation of Need: The Administrator of the National Aeronautics and Space Administration has determined that the establishment of a NASA Exploration Transportation System Strategic Roadmap Committee is necessary and in the public interest in connection with the performance of duties imposed upon NASA by law. This determination follows consultation with the Committee Management Secretariat, General Services Administration.

Name of Committee: NASA Exploration Transportation System Strategic Roadmap Committee.

Purpose and Objective: The Committee will advise the NASA Administrator on developing a new launch system and crew exploration vehicle to provide transportation to and beyond low Earth orbit. The Committee will draw on the expertise of its members and other sources to provide its advice and recommendations to the Agency. The Committee will hold meetings and make site visits as necessary to accomplish their responsibilities. The Committee will function solely as an advisory board and will comply fully with the provisions of the Federal Advisory Committee Act.

Lack of Duplication of Resources: The Committee's functions cannot be performed by the agency, another existing committee, or other means such as a public meeting.

Fairly Balanced Membership: The Committee will consist of a balance of experts from within the government, private industry, and academia. In addition, there may be additional experts selected for Subcommittees or Task Forces. Members of the Committee, Subcommittee or Task Forces will be chosen from among industry, academia, and government with recognized

knowledge and expertise in specific areas across the NASA portfolio. Total membership will reflect a fairly balanced view.

Duration: Ad hoc.

Responsible NASA Official: Dr. Marc Allen, Advanced Planning and Integration Office, National Aeronautics and Space Administration, 300 E Street, SW., Washington, DC 20546, telephone (202) 358–2373.

P. Diane Rausch,

Advisory Committee Management Officer, National Aeronautics and Space Administration.

[FR Doc. 04–26970 Filed 12–7–04; 8:45 am]

BILLING CODE 7510–13–P

NATIONAL AERONAUTICS AND SPACE ADMINISTRATION

[Notice 04–140]

Notice of Establishment of a NASA Advisory Committee, Pursuant to the Federal Advisory Committee Act, 5 U.S.C. App 1 *et seq.*

Agency: National Aeronautics and Space Administration (NASA).

Explanation of Need: The Administrator of the National Aeronautics and Space Administration has determined that the establishment of a NASA International Space Station Strategic Roadmap Committee is necessary and in the public interest in connection with the performance of duties imposed upon NASA by law. This determination follows consultation with the Committee Management Secretariat, General Services Administration.

Name of Committee: NASA International Space Station Strategic Roadmap Committee.

Purpose and Objective: The Committee will advise the NASA Administrator on completing assembly of the International Space Station and on focusing research to support space exploration goals, with emphasis on understanding how the space environment affects human health and capabilities, and developing countermeasures. The Committee will draw on the expertise of its members and other sources to provide its advice and recommendations to the Agency. The Committee will hold meetings and make site visits as necessary to accomplish their responsibilities. The Committee will function solely as an advisory board and will comply fully with the provisions of the Federal Advisory Committee Act.

Lack of Duplication of Resources: The Committee's functions cannot be performed by the agency, another existing committee, or other means such as a public meeting.

Fairly Balanced Membership: The Committee will consist of a balance of experts from within the government, private industry, and academia. In addition, there may be additional experts selected for Subcommittees or Task Forces. Members of the Committee, Subcommittee or Task Forces will be chosen from among industry, academia, and government with recognized knowledge and expertise in specific areas across the NASA portfolio. Total membership will reflect a fairly balanced view.

Duration: Ad hoc.

Responsible NASA Official: Dr. Marc Allen, Advanced Planning and Integration Office, National Aeronautics and Space Administration, 300 E Street, SW., Washington, DC 20546, telephone (202) 358–2373.

P. Diane Rausch,

Advisory Committee Management Officer, National Aeronautics and Space Administration.

[FR Doc. 04–26969 Filed 12–7–04; 8:45 am]

BILLING CODE 7510–13–P

NATIONAL AERONAUTICS AND SPACE ADMINISTRATION

[Notice (04–133)]

Notice of Establishment of a NASA Advisory Committee, Pursuant to the Federal Advisory Committee Act, 5 U.S.C. App 1 et seq.

AGENCY: National Aeronautics and Space Administration (NASA).

Explanation of Need: The Administrator of the National Aeronautics and Space Administration has determined that the establishment of a NASA Nuclear Systems Strategic Roadmap Committee is necessary and in the public interest in connection with the performance of duties imposed upon NASA by law. This determination follows consultation with the Committee Management Secretariat, General Services Administration.

Name of Committee: NASA Nuclear Systems Strategic Roadmap Committee.

Purpose and Objective: The Committee will advise the NASA Administrator on utilization of nuclear systems for the advancement of space science and exploration. The Committee will draw on the expertise of its members and other sources to provide its advice and recommendations to the Agency. The Committee will hold meetings and make site visits as necessary to accomplish their responsibilities. The Committee will function solely as an advisory board and will comply fully with the provisions of the Federal Advisory Committee Act.

Lack of Duplication of Resources: The Committee's functions cannot be performed by the agency, another existing committee, or other means such as a public meeting.

Fairly Balanced Membership: The Committee will consist of a balance of experts from within the government, private industry, and academia. In addition, there may be additional experts selected for Subcommittees or Task Forces. Members of the Committee, Subcommittee or Task Forces will be chosen from among industry, academia, and government with recognized knowledge and expertise in specific areas across the NASA portfolio. Total membership will reflect a fairly balanced view.

Duration: Ad hoc.

Responsible NASA Official: Dr. Marc Allen, Advanced Planning and Integration Office, National Aeronautics and Space Administration, 300 E Street, SW., Washington, DC 20546, telephone (202) 358–2373.

P. Diane Rausch,

Advisory Committee Management Officer, National Aeronautics and Space Administration.

[FR Doc. 04–26962 Filed 12–7–04; 8:45 am]

BILLING CODE 7510–13–P

NATIONAL AERONAUTICS AND SPACE ADMINISTRATION

[Notice (04–144)]

Notice of Establishment of a NASA Advisory Committee, Pursuant to the Federal Advisory Committee Act, 5 U.S.C. App 1 *et seq.*

AGENCY: National Aeronautics and Space Administration (NASA).

Explanation of Need: The Administrator of the National Aeronautics and Space Administration has determined that the establishment of a NASA Robotic and Human Lunar Exploration Strategic Roadmap Committee is necessary and in the public interest in connection with the performance of duties imposed upon NASA by law. This determination follows consultation with the Committee Management Secretariat, General Services Administration.

Name of Committee: NASA Robotic and Human Lunar Exploration Strategic Roadmap Committee.

Purpose and Objective: The Committee will advise the NASA Administrator on undertaking robotic

and human exploration of the Moon to further science and to enable sustained human and robotic exploration of Mars and other destinations. The Committee will draw on the expertise of its members and other sources to provide its advice and recommendations to the Agency. The Committee will hold meetings and make site visits as necessary to accomplish their responsibilities. The Committee will function solely as an advisory board and will comply fully with the provisions of the Federal Advisory Committee Act.

Lack of Duplication of Resources: The Committee's functions cannot be performed by the agency, another existing committee, or other means such as a public meeting.

Fairly Balanced Membership: The Committee will consist of a balance of experts from within the government, private industry, and academia. In addition, there may be additional experts selected for Subcommittees or Task Forces. Members of the Committee, Subcommittee or Task Forces will be chosen from among industry, academia, and government with recognized knowledge and expertise in specific areas across the NASA portfolio. Total membership will reflect a fairly balanced view.

Duration: Ad hoc.

Responsible NASA Official: Dr. Marc Allen, Advanced Planning and Integration Office, National Aeronautics and Space Administration, 300 E Street, SW., Washington, DC 20546, telephone (202) 358–2373.

P. Diane Rausch,

Advisory Committee Management Officer, National Aeronautics and Space Administration.

[FR Doc. 04–26973 Filed 12–7–04; 8:45 am]

BILLING CODE 7510–13–P

NATIONAL AERONAUTICS AND SPACE ADMINISTRATION

[Notice (04–143)]

Notice of Establishment of a NASA Advisory Committee, Pursuant to the Federal Advisory Committee Act, 5 U.S.C. App 1 *et seq.*

AGENCY: National Aeronautics and Space Administration (NASA).

Explanation of Need: The Administrator of the National Aeronautics and Space Administration has determined that the establishment of a NASA Solar System Exploration Strategic Roadmap Committee is necessary and in the public interest in connection with the performance of duties imposed upon NASA by law. This determination follows consultation with the Committee Management Secretariat, General Services Administration.

Name of Committee: NASA Solar System Exploration Strategic Roadmap Committee.

Purpose and Objective: The Committee will advise the NASA Administrator on conducting robotic exploration across the solar system to search for evidence of life, to understand the history of the solar system, to search for resources, and to support human exploration. The Committee will draw on the expertise of its members and other sources to provide its advice and recommendations to the Agency. The Committee will hold meetings and make site visits as necessary to accomplish their responsibilities. The Committee will function solely as an advisory board and will comply fully with the provisions of the Federal Advisory Committee Act.

Lack of Duplication of Resources: The Committee's functions cannot be performed by the agency, another existing committee, or other means such as a public meeting.

Fairly Balanced Membership: The Committee will consist of a balance of experts from within the government, private industry, and academia. In addition, there may be additional experts selected for Subcommittees or Task Forces. Members of the Committee, Subcommittee or Task Forces will be chosen from among industry, academia, and government with recognized knowledge and expertise in specific areas across the NASA portfolio. Total membership will reflect a fairly balanced view.

Duration: Ad hoc.

Responsible NASA Official: Dr. Marc Allen, Advanced Planning and Integration Office, National Aeronautics and Space Administration, 300 E Street, SW., Washington, DC 20546, telephone (202) 358–2373.

P. Diane Rausch,

Advisory Committee Management Officer, National Aeronautics and Space Administration.

[FR Doc. 04–26972 Filed 12–7–04; 8:45 am]

BILLING CODE 7510–13–P

NATIONAL AERONAUTICS AND SPACE ADMINISTRATION

[Notice 04–139]

Notice of Establishment of a NASA Advisory Committee, Pursuant to the Federal Advisory Committee Act, 5 U.S.C. App 1 et seq.

AGENCY: National Aeronautics and Space Administration (NASA).

Explanation of Need: The Administrator of the National Aeronautics and Space Administration has determined that the establishment of a NASA Space Shuttle Strategic Roadmap Committee is necessary and in the public interest in connection with the performance of duties imposed upon NASA by law. This determination follows consultation with the Committee Management Secretariat, General Services Administration.

Name of Committee: NASA Space Shuttle Strategic Roadmap Committee.

Purpose and Objective: The Committee will advise the NASA Administrator on returning the Space Shuttle to flight, completing assembly of the International Space Station, and safely transitioning from the Space Shuttle to a new exploration transportation system. The Committee will draw on the expertise of its members and other sources to provide its advice and recommendations to the Agency. The Committee will hold meetings and make site visits as necessary to accomplish their responsibilities. The Committee will function solely as an advisory board and will comply fully with the provisions of the Federal Advisory Committee Act.

Lack of Duplication of Resources: The Committee's functions cannot be performed by the agency, another existing committee, or other means such as a public meeting.

Fairly Balanced Membership: The Committee will consist of a balance of experts from within the government, private industry, and academia. In addition, there may be additional experts selected for Subcommittees or Task Forces. Members of the Committee, Subcommittee or Task Forces will be chosen from among industry, academia, and government with recognized knowledge and expertise in specific areas across the NASA portfolio. Total membership will reflect a fairly balanced view.

Duration: Ad hoc.

Responsible NASA Official: Dr. Marc Allen, Advanced Planning and Integration Office, National Aeronautics and Space Administration, 300 E Street,

SW., Washington, DC 20546, telephone (202) 358–2373.

P. Diane Rausch,

Advisory Committee Management Officer, National Aeronautics and Space Administration.

[FR Doc. 04–26968 Filed 12–7–04; 8:45 am]

BILLING CODE 7510–13–P

NATIONAL AERONAUTICS AND SPACE ADMINISTRATION

[Notice (04–136)]

Notice of Establishment of a NASA Advisory Committee, Pursuant to the Federal Advisory Committee Act, 5 U.S.C. App 1 *et seq.*

AGENCY: National Aeronautics and Space Administration (NASA).

Explanation of Need: The Administrator of the National Aeronautics and Space Administration has determined that the establishment of a NASA Sun-Solar System Connection Strategic Roadmap Committee is necessary and in the public interest in connection with the performance of duties imposed upon NASA by law. This determination follows consultation with the Committee Management Secretariat, General Services Administration.

Name of Committee: NASA Sun-Solar System Connection Strategic Roadmap Committee.

Purpose and Objective: The Committee will advise the NASA Administrator on exploring the Sun-Earth system to understand the Sun and its effects on Earth, the solar system, and the space environmental conditions that will be experienced by human explorers. The Committee will draw on the expertise of its members and other sources to provide its advice and recommendations to the Agency. The Committee will hold meetings and make site visits as necessary to accomplish their responsibilities. The Committee will function solely as an advisory board and will comply fully with the provisions of the Federal Advisory Committee Act.

Lack of Duplication of Resources: The Committee's functions cannot be performed by the agency, another existing committee, or other means such as a public meeting.

Fairly Balanced Membership: The Committee will consist of a balance of experts from within the government, private industry, and academia. In addition, there may be additional experts selected for Subcommittees or Task Forces. Members of the Committee, Subcommittee or Task Forces will be chosen from among industry, academia, and government with recognized knowledge and expertise in specific areas across the NASA portfolio. Total membership will reflect a fairly balanced view.

Duration: Ad hoc.

Responsible NASA Official: Dr. Marc Allen, Advanced Planning and Integration Office, National Aeronautics and Space Administration, 300 E Street, SW., Washington, DC 20546, telephone (202) 358–2373.

Dated:

P. Diane Rausch,

Advisory Committee Management Officer, National Aeronautics and Space Administration.

[FR Doc. 04–26965 Filed 12–7–04; 8:45 am]

BILLING CODE 7510–13–P

NATIONAL AERONAUTICS AND SPACE ADMINISTRATION

[Notice (04–138)]

Notice of Establishment of a NASA Advisory Committee, Pursuant to the Federal Advisory Committee Act, 5 U.S.C. App 1 *et seq.*

AGENCY: National Aeronautics and Space Administration (NASA).

Explanation of Need: The Administrator of the National Aeronautics and Space Administration has determined that the establishment of a NASA Universe Exploration Strategic Roadmap Committee is necessary and in the public interest in connection with the performance of duties imposed upon NASA by law. This determination follows consultation with the Committee Management Secretariat, General Services Administration.

Name of Committee: NASA Universe Exploration Strategic Roadmap Committee.

Purpose and Objective: The Committee will advise the NASA Administrator on exploring our Universe to understand its origin, structure, evolution, and destiny. The Committee will draw on the expertise of its members and other sources to provide its advice and recommendations to the Agency. The Committee will hold meetings and make site visits as necessary to accomplish their responsibilities. The Committee will function solely as an advisory board and will comply fully with the provisions of the Federal Advisory Committee Act.

Lack of Duplication of Resources: The Committee's functions cannot be performed by the agency, another existing committee, or other means such as a public meeting.

Fairly Balanced Membership: The Committee will consist of a balance of experts from within the government, private industry, and academia. In addition, there may be additional experts selected for Subcommittees or Task Forces. Members of the Committee, Subcommittee or Task Forces will be chosen from among industry, academia, and government with recognized knowledge and expertise in specific areas across the NASA portfolio. Total membership will reflect a fairly balanced view.

Duration: Ad hoc.

Responsible NASA Official: Dr. Marc Allen, Advanced Planning and Integration Office, National Aeronautics and Space Administration, 300 E Street, SW., Washington, DC 20546, telephone (202) 358–2373.

P. Diane Rausch,

Advisory Committee Management Officer, National Aeronautics and Space Administration.

[FR Doc. 04–26967 Filed 12–7–04; 8:45 am]

BILLING CODE 7510–13–P

THE NATIONAL FOUNDATION ON THE ARTS AND HUMANITIES

Proposed Collection, Comment Request, User Study

AGENCY: Institute of Museum and Library Services, NFAH.

ACTION: Notice.

SUMMARY: The Institute of Museum and Library Services as part of its continuing effort to reduce paperwork and respondent burden, conducts a pre-clearance consultation program to provide the general public and federal agencies with an opportunity to comment on proposed and/or continuing collections of information in accordance with the Paperwork Reduction Act of 1995 (PRA95) (44 U.S.C. 3508(2)(A)). This program helps to ensure that requested data can be provided in the desired format, reporting burden (time and financial resources) is minimized, collection instruments are clearly understood, and the impact of collection requirements on respondents can by properly assessed. Currently the Institute of Museum and Library Services is soliciting comments concerning the proposed study of the status of use of technology and digitization activities in the nation's museums and libraries.

A copy of the proposed information collection request can be obtained by

contacting the individual listed below in the addressee section of this notice.

DATES: Written comments must be submitted to the office listed in the addressee section below on or before February 7, 2005.

IMLS is particularly interested in comments that help the agency to:

- Evaluate whether the proposed collection of information is necessary for the proper performance of the functions of the agency, including whether the information will have practical utility;
- Evaluate the accuracy of the agency's estimate of the burden of the proposed collocation of information including the validity of the methodology and assumptions used;
- Enhance the quality, utility and clarity of the information to be collected; and
- Minimize the burden of the collection of information on those who are to respond, including through the use of appropriate automated electronic, mechanical, or other technological collection techniques or other forms of information technology *e.g.* permitting electronic submissions of responses.

ADDRESSES: Send comments to: Rebecca Danvers, Director of Research and Technology, Institute of Museum and Library Services, 1100 Pennsylvania Ave., NW., Room 223, Washington, DC 20506. Dr. Danvers can be reached on telephone: (202) 606–2478, fax: (202) 606–0395 or by e-mail at *rdanvers@imls.gov.*

SUPPLEMENTARY INFORMATION:

I. Background

The Institute of Museum and Library Service is an independent Federal grant-making agency authorized by the Museum and Library Services Act, 20 U.S.C. Section 9101, *et seq.* The IMLS provides a variety of grant programs to assist the nation's museums and libraries in improving their operations and enhancing their services to the public. Museums and libraries of all sizes and types may receive support from IMLS programs. The Museum and Library Services Act of 2003 includes a strong emphasis on supporting museum and library services through effective and efficient use of new technologies. This solicitation is to develop plans to collect information to assist IMLS understand the information needs and expectations of users and potential users of online information including, but not limited to information currently available online through libraries, museums and other cultural heritage institutions, and the Internet, and of the impacts of having such information.

II. Current Action

The core duties of the Institute of Museum and Library Services, as stated in its strategic plan, are to promote excellence in library services and to promote access to museum and library services for a diverse public. This goal will be accomplished in part by promoting access to online resources available through museums and libraries and to promote the development of online resources that have positive impact. IMLS is seeking assistance in developing specific plans to collect information from library users, museum users and Internet users to understand their information needs, their preference for various sources of information and factors affecting their choice, the usefulness and value of the information accessed, and to identify content that should be made available online along with mechanisms and resources needed to connect users to that content. These information collections will be developed based on the geographic location and demographic characteristics of the populations studied. Some information on online information access has been collected, most notably the Pew Internet and American Life project. The information IMLS collects should build on, but not duplicate, existing or ongoing collections.

Agency: Institute of Museum and Library Services.

Title: National Study of Users and Potential Users of Online Information.

OMB Number: n/a.

Agency Number: 3137.

Frequency: One time.

Affected Public: Users of libraries, museums and the Internet.

Number of Respondents: 5,000.

Estimated Time Per Respondent: 10–15 minutes.

Total Burden Hours: 1,042.

Total Annualized Capital/Startup Costs: 0.

Total Annual Costs: 0.

FOR FURTHER INFORMATION CONTACT: Rebecca Danvers, Director of the Office of Research and Technology, Institute of Museum and Library Services, 1100 Pennsylvania Avenue, NW., Washington, DC 20506, telephone (202) 606–2478.

Dated: December 3, 2004.

Rebecca Danvers,

Director, Office of Research and Technology.

[FR Doc. 04–26925 Filed 12–7–04; 8:45 am]

BILLING CODE 7036–01–M

THE NATIONAL FOUNDATION ON THE ARTS AND HUMANITIES

Proposed Collection, Comment Request, Library Workforce

AGENCY: Institute of Museum and Library Services, NFAH.

ACTION: Notice.

SUMMARY: The Institute of Museum and Library Services as part of its continuing effort to reduce paperwork and respondent burden, conducts a preclearance consultation program to provide the general public and federal agencies with an opportunity to comment on proposed and/or continuing collections of information in accordance with the Paperwork Reduction Act of 1995 (PRA95) [44 U.S.C. 3508(2)(A)] This program helps to ensure that requested data can be provided in the desired format, reporting burden (time and financial resources) is minimized, collection instruments are clearly understood, and the impact of collection requirements on respondents can be properly assessed. Currently the Institute of Museum and Library Services is soliciting comments concerning the proposed study of the status of use of technology and digitization activities in the nation's museums and libraries.

A copy of the proposed information collection request can be obtained by contacting the individual listed below in the addressee section of this notice.

DATES: Written comments must be submitted to the office listed in the addressee section below on or before February 7, 2005.

IMLS is particularly interested in comments that help the agency to:

- Evaluate whether the proposed collection of information is necessary for the proper performance of the functions of the agency, including whether the information will have practical utility:
- Evaluate the accuracy of the agency's estimate of the burden of the proposed collection of information including the validity of the methodology and assumptions used;
- Enhance the quality, utility and clarity of the information to be collected; and
- Minimize the burden of the collection of information on those who are to respond, including through the use of appropriate automated electronic, mechanical, or other technological collection techniques or other forms of information technology, *e.g.* permitting electronic submissions of responses.

ADDRESSES: Send comments to: Rebecca Danvers, Director of Research and

Technology, Institute of Museum and Library Services, 1100 Pennsylvania Ave., NW., Room 223, Washington, DC 20506. Dr. Danvers can be reached on telephone: (202) 606–2478, fax: (202) 606–0395 or by e-mail at *rdanvers@imls.gov.*

SUPPLEMENTARY INFORMATION:

I. Background

The Institute of Museum and Library Services is an independent Federal grant-making agency authorized by the Museum and Library Services Act, 20 U.S.C. Section 9101 *et seq.* The IMLS provides a variety of grant programs to assist the nation's museums and libraries in improving their operations and enhancing their services to the public. Museums and libraries of all sizes and types may receive support from IMLS programs. The Museum and Library Services Act of 2003 includes a strong emphasis on supporting library services through the development of a strong library workforce by supporting activities that educate, recruit and train persons in library and information science, particularly in areas of new technology and other critical needs, including graduate fellowships, traineeships, institutes, or other programs. This solicitation is to develop plans to collect information to assist IMLS understand library and information science (LIS) workforce needs, including supply and demand, factors that affect them, existing workforce projections.

II. Current Action

The core duties of the Institute of Museum and Library Services, as stated in its strategic plan, are to promote excellence in library services and to promote access to museum and library services for a diverse public. This goal will be accomplished in part by promoting improved workforce planning including strategies for recruitment and retention of workers. IMLS is seeking assistance in developing specific plans to collect information from libraries and other information industry employers of librarians, librarians and other information professionals, and graduate schools of library and information science. Information to be collected from libraries and other employers of LIS professionals includes current and projected employment in terms of numbers of positions (filled and vacant), functional specialization, educational requirements, skill/competency requirements, salaries and benefits, demographics, annual budget/expenditures, constituency or market size. Information to be collected from LIS professionals includes current employment, career path and career progression, professional association/union membership and demographics. Information to be collected from the graduate LIS schools includes current and projected program offerings, recruitment, enrollment, graduation, placement, alumni tracking. These information collections will be based on geographic location (State and locality), type of employing organization and functionality of the work. A great deal of information has been collected on the LIS workforce, *e.g.,* by BLS, NCES and professional societies. The information IMLS collects should build on, but not duplicate, existing or ongoing collections.

Agency: Institute of Museum and Library Services.

Title: National Study on the Future of Librarians in the Workforce.

OMB Number: n/a.

Agency Number: 3137.

Frequency: One time.

Affected Public: Libraries and other information industry organizations, librarians and other information professionals, graduate schools of library and information science.

Number of Respondents: 27,000 libraries, 1,000 information industry employers of LIS professionals, 2,500 LIS professionals, and 60 graduate schools of library and information science.

Estimated Time Per Respondent: 2 hours per library/employer; 30 minutes per professional, 3 hour per graduate school.

Total Burden Hours: 57,430.

Total Annualized Capital/Startup Costs: 0.

Total Annual Costs: 0.

FOR FURTHER INFORMATION CONTACT: Rebecca Danvers, Director of the Office of Research and Technology, Institute of Museum and Library Services, 1100 Pennsylvania Avenue, NW., Washington, DC 20506, telephone (202) 606–2478.

Dated: December 3, 2004.

Rebecca Danvers,

Director, Office of Research and Technology.

[FR Doc. 04–26926 Filed 12–7–04; 8:45 am]

BILLING CODE 7036–01–M

NATIONAL SCIENCE FOUNDATION

Committee Management Renewal

The National Science Foundation (NSF) management officials having responsibility for the Business and Operations Advisory Committee (#9556) have determined that renewing this committee for another two years is necessary and in the public interest in connection with the performance of duties imposed upon the Director, National Science Foundation (NSF), by 42 U.S.C. 1861 *et seq.* This determination follows consultation with the Committee Management Secretariat, General Services Administration.

Effective date for renewal is December 10, 2004. For more information, please contact Susanne Bolton, NSF, at (703) 292–7488.

Dated: December 3, 2004.

Susanne Bolton,

Committee Management Officer.

[FR Doc. 04–26922 Filed 12–7–04; 8:45 am]

BILLING CODE 7555–01–M

NUCLEAR REGULATORY COMMISSION

[Docket No. 72–25]

Notice of Issuance of Materials License SNM–2512 for the Idaho Spent Fuel Facility

AGENCY: Nuclear Regulatory Commission.

ACTION: Issuance of Materials License.

FOR FURTHER INFORMATION CONTACT: James R. Hall, Senior Project Manager, Spent Fuel Project Office, Office of Nuclear Material Safety and Safeguards, U.S. Nuclear Regulatory Commission, Washington, DC 20555. Telephone: (301) 415–1336; fax number: (301) 415–8555; e-mail: *jrh@nrc.gov.*

SUPPLEMENTARY INFORMATION: The U.S. Nuclear Regulatory Commission (NRC or the Commission) has issued Materials License No. SNM–2512 to the Foster Wheeler Environmental Corporation (FWENC) for the receipt, possession, storage, and transfer of spent fuel at the Idaho Spent Fuel (ISF) Facility, an independent spent fuel storage installation (ISFSI) to be located at the Idaho National Engineering and Environmental Laboratory (INEEL), located in Butte County, Idaho. This Materials License is issued under the provisions of Title 10 of the Code of Federal Regulations, Part 72 (10 CFR Part 72), and is effective as of the date of issuance. A license for an ISFSI under 10 CFR Part 72 is issued for 20 years, but the licensee may seek to renew the license prior to its expiration.

The ISF Facility is licensed to provide interim dry storage for approximately 22 metric tons of heavy metal contained in unique fuel elements and associated radioactive materials resulting from the

operation of the Peach Bottom Unit 1 high-temperature gas reactor, the Shippingport light water breeder reactor, and various Training, Research, and Isotope reactors built by General Atomics (TRIGA reactors). The ISF Facility is designed for the repackaging of specific quantities of this spent nuclear fuel, currently stored by the U.S. Department of Energy (DOE) at the INEEL, into new storage canisters, followed by its placement into an interim dry storage vault, in preparation for eventual shipment to a high-level waste geologic repository. The ISF Facility represents one element of a Settlement Agreement, dated October 17, 1995, among the DOE, the U.S. Navy, and the State of Idaho, regarding waste removal and environmental cleanup at the INEEL.

Following receipt of FWENC's application dated November 19, 2001, the NRC staff published a ''Notice of Docketing, Notice of Consideration of Issuance, and Notice of Opportunity for a Hearing for a Materials License for the Idaho Spent Fuel Facility'' in the **Federal Register** on June 27, 2002 (67 FR 43358). In conjunction with the issuance of this license, the staff published a final environmental impact statement (FEIS), ''Environmental Impact Statement for the Proposed Idaho Spent Fuel Facility at the Idaho National Engineering and Environmental Laboratory in Butte County, Idaho,'' (NUREG–1773, Final Report, January 2004). A Notice of Availability of the FEIS was published in the **Federal Register** on February 27, 2004 (69 FR 9387). The staff has determined that no significant environmental impacts will be generated as a result of construction and operation of the proposed ISF Facility.

The NRC staff has completed its environmental safeguards, and safety reviews of the Idaho Spent Fuel Facility license application and safety analysis report, as amended. The NRC staff issued Materials License No. SNM–2512 and its Safety Evaluation Report (SER) for the Idaho Spent Fuel Facility on November 30, 2004.

Further details with respect to this action are provided in the application dated November 19, 2001, as amended November 8, 2002, and March 28 and November 14, 2003; the staff's FEIS dated January 2004; Materials License SNM–2512 and the staff's SER, dated November 30, 2004; and other related documents, which are normally available in the records component of NRC's Agencywide Documents Access and Management System (ADAMS). The NRC maintains ADAMS, which provides text and image files of NRC's public documents. However, as of October 25, 2004, the NRC initiated an additional security review of publicly available documents to ensure that potentially sensitive information is removed from the ADAMS database accessible through the NRC's Web site. Interested members of the public should check the NRC's web pages for updates on the availability of documents through the ADAMS system. When public availability is restored, these documents may be accessed through the NRC's Public Electronic Reading Room on the Internet at: *http://www.nrc.gov/reading-rm/adams.html.* After resumption of public access to ADAMS, copies of the referenced documents will also be available for review at the NRC Public Document Room (PDR), located at 11555 Rockville Pike, Rockville, MD, 20852. PDR reference staff can be contacted at 1–800–397–4209, (301) 415–4737 or by e-mail to *pdr@nrc.gov.* The PDR reproduction contractor will copy documents for a fee.

Dated at Rockville, Maryland, this 30th day of November, 2004.

For the Nuclear Regulatory Commission.

James R. Hall,

Senior Project Manager, Licensing Section, Spent Fuel Project Office, Office of Nuclear Material Safety and Safeguards.

[FR Doc. 04–26903 Filed 12–7–04; 8:45 am]

BILLING CODE 7590–01–P

NUCLEAR REGULATORY COMMISSION

[Docket No. 50–483]

Union Electric Company; Notice of Withdrawal of Application for Amendment to Facility Operating License

The U.S. Nuclear Regulatory Commission (the Commission) has granted the request of Union Electric Company (the licensee) to withdraw its December 15, 2003, application for proposed amendment to Facility Operating License No. NPF–30 for the Callaway Plant, Unit No. 1, located in Callaway County, Missouri.

The proposed amendment would have revised Technical Specifications (TSs) 3.3.9, ''Boron Dilution Mitigation System (BDMS),'' and 3.9.2, ''Unborated Water Source Isolation Valves.'' The proposed changes would replace the phrase ''unborated water'' by the word ''dilution'' in several places and delete references to isolation valves BGV0178 and BGV0601. A Note would also be added to TS 3.9.2 about dilution source path valves may be unisolated.

The Commission had previously issued a Notice of Consideration of Issuance of Amendment published in the **Federal Register** on February 3, 2004 (69 FR 5211). However, by letter dated October 29, 2004, the licensee withdrew the proposed change.

For further details with respect to this action, see the licensee's application for amendment dated December 15, 2003, and the licensee's letter dated October 29, 2004, which withdrew the application for a license amendment. Documents may be examined, and/or copied for a fee, at the NRC's Public Document Room (PDR), located at One White Flint North, Public File Area O1 F21, 11555 Rockville Pike (first floor), Rockville, Maryland. Publicly available records will be accessible electronically from the Agencywide Documents Access and Management Systems (ADAMS) Public Electronic Reading Room [1] on the internet at the NRC Web site, *http://www.nrc.gov/reading-rm/adams/html.* Persons who do not have access to ADAMS or who encounter problems in accessing the documents located in ADAMS, should contact the NRC PDR Reference staff by telephone at 1–800–397–4209, or (301) 415–4737 or by e-mail to *pdr@nrc.gov.*

Dated at Rockville, Maryland, this 1st day of December 2004.

For the Nuclear Regulatory Commission.

Jack Donohew,

Senior Project Manager, Section 2, Project Directorate IV, Division of Licensing Project Management, Office of Nuclear Reactor Regulation.

[FR Doc. 04–26905 Filed 12–7–04; 8:45 am]

BILLING CODE 7590–01–P

NUCLEAR REGULATORY COMMISSION

[Docket No. 72–01]

General Electric Company Notice of Issuance of an Environmental Assessment and Finding of No Significant Impact for License Renewal of the Morris Operation Independent Spent Fuel Storage Installation

AGENCY: Nuclear Regulatory Commission.

ACTION: Environmental assessment.

FOR FURTHER INFORMATION CONTACT: Christopher M. Regan, Senior Project Manager, Spent Fuel Project Office,

[1] Public access to ADAMS has been temporarily suspended so that security reviews of publicly available documents may be performed and potentially sensitive information removed. Please check the NRC Web site for updates on the resumption of ADAMS access.

Office of Nuclear Material Safety and Safeguards, U.S. Nuclear Regulatory Commission, Washington, DC 20555. Telephone: (301) 415–1179; fax number: (301) 415–1179; e-mail: *cmr1@nrc.gov.*

SUPPLEMENTARY INFORMATION: The U.S. Nuclear Regulatory Commission (NRC or the Commission) is considering the renewal of the materials license under the requirements of Title 10 of the Code of Federal Regulations, part 72 (10 CFR part 72), to the General Electric Company (the applicant), authorizing the operation for an additional 20 years, beyond the initial license term, of the General Electric Morris Operation (GEMO) independent spent fuel storage installation (ISFSI) located in Grundy County, Illinois. The Commission's Office of Nuclear Material Safety and Safeguards (NMSS) has completed its review of the environmental report, submitted by the applicant on May 22, 2000, in support of its application for renewal of its materials license. The staff's ''Environmental Assessment Related to the License Renewal of the General Electric Morris Operation Independent Spent Fuel Storage Installation'' has been issued in accordance with 10 CFR part 51.

I. Summary of Environmental Assessment (EA)

Description of the Proposed Action: The proposed licensing action would renew the license to operate a wet storage ISFSI at the GEMO site. The purpose of the ISFSI is to provide for interim storage of spent nuclear fuel generated from the operation of nuclear power reactors using natural water for cooling and enriched Uranium-235 fuel. The GEMO ISFSI is a wet pool storage design and is the only wet ''away from reactor'' ISFSI of its kind in the U.S. The major components of the system for storage of spent nuclear fuel include the stainless steel lined concrete storage basins, the pool structure, the spent fuel storage grid structure and fuel storage baskets each containing nine boiling water reactor (BWR) spent fuel assemblies or twelve pressurized water (PWR) spent fuel assemblies, ancillary equipment necessary for the movement of spent nuclear fuel, *e.g.*, cranes and basket grappling devices, and equipment necessary for the maintenance of the pool water quality and level. A license issued for an ISFSI under 10 CFR part 72 is issued for a fixed period not to exceed 20 years. The proposed GEMO ISFSI renewed license will expire in May 2022, 20 years from expiration of the current ISFSI license.

Need for the Proposed Action: The GEMO ISFSI is needed to provide continued interim storage capacity until such a time that the spent nuclear fuel will be accepted for disposition at a Federal repository. A denial of the request to renew the ISFSI license would result in the cessation of normal operations and the beginning of decommissioning activities. By providing continued interim storage in the GEMO ISFSI there will be no immediate need to move the fuel to another interim storage facility.

Environmental Impacts of the Proposed Action: The NRC staff has concluded that the continued operation of the GEMO ISFSI will not result in a significant impact to the environment. The prior NRC Environmental Impact Appraisal associated with the issuance of Materials License SNM–2500 in May 1982 continues to form the basis for assessing the potential environmental impacts of the proposed license renewal action. The environmental impacts associated with the proposed action concentrate on only those impacts projected to occur during the 20 year license renewal time period. Environmental impacts include the potential direct effects on the ambient environment and its resources. These potential impacts can be categorized as non-radiological and radiological impacts.

There will be no significant radiological or non-radiological environmental impacts from routine operation of the GEMO ISFSI during the extended period of operation. The ISFSI is essentially a passive facility with no liquid and gaseous effluents released from the ISFSI that exceed Federal regulatory limits. The continued operation of the GEMO ISFSI will result in no change to the current impact on land use, water resources, air quality, generation of wastewater, geology, biota, cultural resources, and area demographics and socio-economics. The GEMO ISFSI is in its completed configuration and as such there will be no environmental impacts from construction activities. The staff does not expect operation of the GEMO ISFSI for an additional period of 20 years to impact any threatened or endangered species. The radiological dose rates from the spent fuel pool will be limited by the design of the basin, the depth of basin water, and the basin superstructure. The total occupational dose to workers at the GEMO site resulting from continued ISFSI operation will have a small impact on workers or the public, but all occupational doses must be maintained below the limits specified in 10 CFR part 20. The annual dose to the nearest resident from GEMO ISFSI activities remains significantly below the annual dose limits specified in 10 CFR 72.104 and 10 CFR 20.1301 (25 mrem and 100 mrem, respectively). The cumulative dose to an individual offsite from all site activities will be 2.2×10^{-5} mrem/year, which is also much less than the limits specified in 10 CFR 72.104 and 10 CFR 20.1301. These doses are also a small fraction of the doses resulting from naturally-occurring terrestrial and cosmic radiation of about 100 mrem/yr in the vicinity of the GEMO ISFSI. Additionally, occupational doses received by facility workers will not exceed the limits specified in 10 CFR 20.1201. For hypothetical accidents, the calculated dose to an individual at the nearest site boundary is well below the 5 rem limit for accidents set forth in 10 CFR 72.106(b) and in the U.S. Environmental Protection Agency's protective action guidelines.

Alternatives to the Proposed Action: The applicant's Environmental Report and the staff's EA discuss the No Action alternative to renewal of the GEMO ISFSI license. The No-Action alternative includes shipment of the spent nuclear fuel off site to another NRC licensed interim storage facility and subsequent decommissioning of the GEMO ISFSI. Other alternatives, including shipping of spent nuclear fuel from GEMO to a permanent Federal repository, to a reprocessing facility, or to a privately owned spent fuel storage facility were determined to be non-viable alternatives, as no such facilities are currently available in the United States, and shipping the spent fuel overseas is impractical in light of the political, legal, and logistical uncertainties and the high cost and therefore were also not considered viable alternatives. The No-Action alternative considered the environmental consequences of shipping the GEMO spent nuclear fuel inventory to another NRC licensed ISFSI and the consequences of immediate decommissioning and decontamination (D&D) verses D&D at the end of the renewed license renewal term.

The environmental impacts from the No-Action alternative include an immediate short term increase in air releases from machinery necessary for the transport of the spent nuclear fuel offsite and the equipment necessary for dismantling and demolition of the GEMO buildings. Additionally, there will be a small impact on water resources resulting from an increase in water consumption from decontamination activities necessary for fuel shipment. The specific type of D&D activities will remain unchanged, however, the activities would be undertaken immediately rather than at

the end of the proposed 20-year extended period of operation. Onsite facilities are capable of processing of the sanitary wastewater generated by D&D activities and therefore D&D activities would result in no long-term small impacts. The No-Action alternative would result in no other non-radiological long-term small impacts. The No-Action alternative would require movement of the spent nuclear fuel inventory to another NRC licensed ISFSI. These activities are similar to, but in reverse of, receipt operations and do result in an increased level of occupational exposures and exposure to the public. Shipment of the spent nuclear fuel to another NRC licensed ISFSI before the Federal repository is ready to receive the fuel would result in two separate shipping activities, the first shipment moving the spent nuclear fuel from the GEMO ISFSI to another NRC licensed ISFSI, and the second from the second NRC licensed ISFSI to the Federal repository. Two shipments would result in more radiological consequences than a single shipment. Additionally, since the constituents of the spent nuclear fuel decay over time the radiological impacts of shipment would be larger if the spent nuclear fuel were moved immediately verses movement at the end of the proposed license renewal period in the year 2022. In the long-term, the immediate decommissioning of the GEMO ISFSI would have a larger negative impact on the local economy and infrastructure than if decommissioning were to take place at the end of the proposed extended period of operation. For the reasons cited above, the No-Action alternative considered is a less practical alternative.

As discussed in the EA, the Commission has concluded that there are no significant environmental impacts associated with the proposed license renewal of the GEMO ISFSI, and other alternatives were not pursued because of additional occupational exposures, and the impracticality of other offsite storage options.

Agencies and Persons Contacted: Officials from the Illinois Emergency Management Agency and the Illinois Office of the Governor were contacted in preparing the staff's Environmental Assessment. The Illinois Emergency Management Agency, provided comments by letter dated May 14, 2004. These comments have been addressed in the Environmental Assessment.

II. Finding of No Significant Impact

The staff has reviewed the environmental impacts for the proposed license renewal of the GEMO ISFSI relative to the requirements set forth in 10 CFR part 51, and has prepared an Environmental Assessment. Based on the Environmental Assessment, the staff concludes that there are no significant radiological or non-radiological impacts associated with the proposed action and that issuance of a renewed license for the interim storage of spent nuclear fuel at the GEMO ISFSI will have no significant impact on the quality of the human environment. Therefore, pursuant to 10 CFR 51.31 and 51.32, a finding of no significant impact is appropriate and an environmental impact statement need not be prepared for the issuance of a renewed materials license for the GEMO ISFSI.

Further details related to this proposed action are provided in the license application, dated May 5, 2000, as supplemented August 13, 2001, September 27, 2003, and August 9, 2004, and the staff's Environmental Assessment, dated November 30, 2004. However, as of October 25, 2004, the NRC initiated an additional security review of publicly available documents to ensure that potentially sensitive information is removed from the Agencywide Documents Access and Management System (ADAMS) database accessible through the NRC's Web site at: *http://www.nrc.gov/reading-rm/adams.html.* Interested members of the public should check the NRC's Web pages for updates on the availability of documents through the ADAMS system. Copies of the referenced documents are available for review and/or copying at the Commission's Public Document Room, One White Flint North Building, 11555 Rockville Pike, Rockville, Maryland, pending resumption of public access to ADAMS. The NRC Public Document Room (PDR) Reference staff can be contacted at 1–800–397–4209, (301) 415–4737 or by e-mail to *pdr@nrc.gov.*

Dated at Rockville, Maryland, this 30th day of November 2004.

For the U.S. Nuclear Regulatory Commission.

Christopher M. Regan,

Senior Project Manager, Spent Fuel Project Office, Office of Nuclear Material Safety and Safeguards.

[FR Doc. 04–26904 Filed 12–7–04; 8:45 am]

BILLING CODE 7590–01–P

NUCLEAR REGULATORY COMMISSION

Advisory Committee on Nuclear Waste; Notice of Meeting

The Advisory Committee on Nuclear Waste (ACNW) will hold its 156th meeting on December 13–14, 2004, Room T–2B3, 11545 Rockville Pike, Rockville, Maryland.

The schedule for this meeting is as follows:

Monday, December 13, 2004

2:30 p.m.–2:40 p.m.: Opening Statement (Open)—The ACNW Chairman will open the meeting with brief opening remarks.

2:40 p.m.–3:45 p.m.: Preparation for Meeting with the NRC Commissioners (Open)—The Committee will discuss the proposed presentation topics for its meeting with the NRC Commissioners, which is scheduled to be held between 9:30 a.m. and 11:30 a.m. on Wednesday, March 16, 2005.

4 p.m.–5 p.m.: Time-of-Compliance for a Proposed High-Level Waste Repository (Open)—The Committee will discuss its previous recommendations regarding time-of-compliance for a proposed high-level waste repository.

5 p.m.–6 p.m.: ACNW 2005 Operating Plan (Open)—The ACNW Committee will continue its discussions and finalize the relevant sections of the 2005 Operating Plan.

Tuesday, December 14, 2004

8:30 a.m.–8:35 a.m.: Opening Statement (Open)—The ACNW Chairman will make opening remarks regarding the conduct of today's sessions.

8:35 a.m.–10 a.m.: Agreement State Program (Open)—The Committee will receive an update from the Director, Office of State and Tribal Programs (OSTP) on recent activities of his office.

10:15 a.m.–11:30 a.m.: Working Group Planning Session (Open)—The Members will discuss draft prospectuses for proposed 2005 working group meetings.

1 p.m.–4:30 p.m.: Sealed Sources (Open)—The Committee will hear from representatives of the NRC staff, DOE, State of Maryland Department of Radiation Protection and other stakeholders on recent activities related to the control and tracking of sealed sources.

4:30 p.m.–5 p.m.: Preparation of ACNW Report (Open)—The Committee will discuss the ACNW report on Sealed Sources (Tentative).

5 p.m.–5:15 p.m.: Miscellaneous (Open)—The Committee will discuss matters related to the conduct of Committee activities and matters and specific issues that were not completed during previous meetings, as time and availability of information permit.

Procedures for the conduct of and participation in ACNW meetings were published in the **Federal Register** on October 18, 2004 (69 FR 61416). In

accordance with these procedures, oral or written statements may be presented by members of the public. Electronic recordings will be permitted only during those portions of the meeting that are open to the public. Persons desiring to make oral statements should notify Mr. Howard J. Larson, (Telephone 301–415–6805), between 7:30 a.m. and 4 p.m. e.t., as far in advance as practicable so that appropriate arrangements can be made to schedule the necessary time during the meeting for such statements. Use of still, motion picture, and television cameras during this meeting will be limited to selected portions of the meeting as determined by the ACNW Chairman. Information regarding the time to be set aside for taking pictures may be obtained by contacting the ACNW office prior to the meeting. In view of the possibility that the schedule for ACNW meetings may be adjusted by the Chairman as necessary to facilitate the conduct of the meeting, persons planning to attend should notify Mr. Howard J. Larson as to their particular needs.

Further information regarding topics to be discussed, whether the meeting has been canceled or rescheduled, the Chairman's ruling on requests for the opportunity to present oral statements and the time allotted, therefore can be obtained by contacting Mr. Howard J. Larson.

ACNW meeting agenda, meeting transcripts, and letter reports are available through the NRC Public Document Room at *pdr@nrc.gov*, or by calling the PDR at 1–800–397–4209, or from the Publicly Available Records System (PARS) component of NRC's document system (ADAMS) which is accessible from the NRC Web site at *http://www.nrc.gov/reading-rm/adams.html* or *http://www.nrc.gov/reading-rm/doc-collections/* (ACRS & ACNW Mtg schedules/agendas).

Video Teleconferencing service is available for observing open sessions of ACNW meetings. Those wishing to use this service for observing ACNW meetings should contact Mr. Theron Brown, ACNW Audiovisual Technician (301–415–8066), between 7:30 a.m. and 3:45 p.m. e.t., at least 10 days before the meeting to ensure the availability of this service. Individuals or organizations requesting this service will be responsible for telephone line charges and for providing the equipment and facilities that they use to establish the video teleconferencing link. The availability of video teleconferencing services is not guaranteed.

The ACNW meeting dates for Calendar Year 2005 are provided below:

ACNW meeting No.	Meeting dates
	January 2005 (No meeting).
157	February 23–25, 2005.
158	March 15–17, 2005.
159	April 19–21, 2005.
160	May 17–19, 2005.
161	June 15–17, 2005.
162	July 19–21, 2005.
	August 2005 (No meeting).
163	September 20–22, 2005.
164	October 18–20, 2005.
	November 2005 (No meeting).
165	December 13–15, 2005.

Dated: December 1, 2004.

Andrew L. Bates,

Advisory Committee Management Officer.

[FR Doc. 04–26901 Filed 12–7–04; 8:45 am]

BILLING CODE 7590–01–P

NUCLEAR REGULATORY COMMISSION

Advisory Committee on Reactor Safeguards; Meeting of the Subcommittee on Reactor Fuels; Notice of Meeting

The ACRS Subcommittee on Reactor Fuels will hold a meeting on December 15–16, 2004, Room T–2B3, 11545 Rockville Pike, Rockville, Maryland.

The entire meeting will be open to public attendance.

The agenda for the subject meeting shall be as follows:

Wednesday, December 15, 2004—8:30 a.m. until the conclusion of business.

Thursday, December 16, 2004—8:30 a.m. until 1 p.m.

The purpose of this meeting is to discuss the draft final safety evaluation report for the Mixed Oxide Fuel Fabrication Facility construction authorization request. The Subcommittee will hear presentations by and hold discussions with representatives of the NRC staff regarding this matter. The Subcommittee will gather information, analyze relevant issues and facts, and formulate proposed positions and actions, as appropriate, for deliberation by the full Committee.

Members of the public desiring to provide oral statements and/or written comments should notify the Designated Federal Official, Ms. Maggalean W. Weston (telephone (301) 415–3151) five days prior to the meeting, if possible, so that appropriate arrangements can be made. Electronic recordings will be permitted.

Further information regarding this meeting can be obtained by contacting the Designated Federal Official between 8 a.m. and 5:30 p.m. (e.t.). Persons planning to attend this meeting are urged to contact the above named individual at least two working days prior to the meeting to be advised of any potential changes to the agenda.

Dated: December 1, 2004.

John H. Flack,

Acting Branch Chief, ACRS/ACNW.

[FR Doc. 04–26902 Filed 12–7–04; 8:45 am]

BILLING CODE 7590–01–P

OFFICE OF PERSONNEL MANAGEMENT

Submission for OMB Review; Comment Request for a Revised Information Collection: OPM Form 1644

AGENCY: Office of Personnel Management.

ACTION: Notice.

SUMMARY: In accordance with the Paperwork Reduction Act of 1995 (Public Law 104–13, May 22, 1995), this notice announces that the Office of Personnel Management (OPM) has submitted to the Office of Management and Budget (OMB) a request for a revised information collection. OPM Form 1644, Child Care Tuition Assistance Program for Federal Employees, is used to verify that child care providers are licensed and/or regulated by State and/or local authorities. Therefore, agencies need to verify that child care providers to whom they make disbursements in the form of child care subsidies meet the statutory requirement.

Approximately 2000 OPM 1644 forms will be processed annually. The OPM Form 1644 takes approximately 10 minutes to complete by each provider. The annual estimated burden is 333.3 hours.

For copies of this proposal, contact Mary Beth Smith-Toomey on (202) 606–8358, FAX (202) 418–3251 or e-mail to *mbtoomey@opm.gov.* Please include a mailing address with your request.

DATES: Comments on this proposal should be received within 30 calendar days from the date of this publication.

ADDRESSES: Send or deliver comments to—

Francis T. Cavanaugh, Acting Manager, Work Life Group, Employee and Family Support Center, Division of Strategic Human Resources Policy, Office of Personnel Management, 1900 E. Street, NW., Room 7315, Washington, DC 20415;

and

Joseph F. Lackey, OPM Desk Officer, Office of Information & Regulatory

Affairs, Office of Management and Budget, New Executive Office Building, NW., Room 10235, Washington, DC 20503.

U.S. Office of Personnel Management.

Kay Coles James,

Director.

[FR Doc. 04–26856 Filed 12–7–04; 8:45 am]

BILLING CODE 6325–39–P

SECURITIES AND EXCHANGE COMMISSION

[Release No. 34–50784; File No. SR–FICC–2004–20]

Self-Regulatory Organizations; Fixed Income Clearing Corporation; Notice of Filing and Immediate Effectiveness of Proposed Rule Change Relating to the Implementation of a Fee for Financing Debits Associated With Certain Obligations of Repo Brokers

December 2, 2004.

Pursuant to Section 19(b)(1) of the Securities Exchange Act of 1934 (''Act''),[1] notice is hereby given that on October 25, 2004, the Fixed Income Clearing Corporation (''FICC'') filed with the Securities and Exchange Commission (''Commission'') the proposed rule change described in Items I, II, and III below, which items have been prepared primarily by FICC. The Commission is publishing this notice to solicit comments on the proposed rule change from interested parties.

I. Self-Regulatory Organization's Statement of the Terms of Substance of the Proposed Rule Change

The proposed rule change consists of implementing a fee where FICC finances debits associated with certain obligations of repo brokers.

II. Self-Regulatory Organization's Statement of the Purpose of, and Statutory Basis for, the Proposed Rule Change

In its filing with the Commission, FICC included statements concerning the purpose of and basis for the proposed rule change and discussed any comments it received on the proposed rule change. The text of these statements may be examined at the places specified in Item IV below. FICC has prepared summaries, set forth in sections (A), (B), and (C) below, of the most significant aspects of these statements.[2]

(A) Self-Regulatory Organization's Statement of the Purpose of, and Statutory Basis for, the Proposed Rule Change

The Commission recently approved FICC rule filing SR–FICC–2003–06[3] that amended the rules of the Government Securities Division (''GSD'') of FICC with respect to forward margin obligations of repo brokers. Pursuant to FICC–2003–06, forward margin debits and credits up to a predetermined dollar amount ''cap'' will become automatically collected or paid (as applicable) by the repo brokers, as is the case for all other netting members. Debits and credits in excess of the cap will become subject to hybrid processing whereby the dollar amount up to the cap would always be collected or paid in its entirety by the broker and amounts over the cap would be financed by GSD at the discretion of FICC.

Specifically with respect to forward margin debits in excess of the cap, if a repo broker is unable to pay its ''excess debit,'' the FICC Operations Department, in consultation with the Credit Risk Department will determine whether it would be appropriate for FICC to finance such an amount. If FICC finances an excess debit, the broker will be charged two fees: (1) A financing fee representing the interest amount that FICC would be charged by the clearing bank and (2) an administrative fee designed to cover FICC's associated costs of obtaining the financing.

Pursuant to the Commission's order approving FICC–2003–06, the administrative fee must be the subject of a rule filing. Due to the close interrelation between the administrative fee and the other provisions of FICC–2003–06, FICC has delayed the implementation of the approved provisions in their entirety until it established the fee. Accordingly, FICC is hereby proposing for immediate effectiveness an administrative fee of $50 per financing to be charged to affected brokers. This administrative fee, along with the previously approved provisions of FICC–2003–06, will be implemented by year-end with the implementation date being announced to members through an important notice.

FICC believes that the proposed rule change is consistent with the requirements of Section 17A of the Act[4] and the rules and regulations thereunder applicable to FICC because it establishes a reasonable fee to cover administrative costs.

(B) Self-Regulatory Organization's Statement on Burden on Competition

FICC does not believe that the proposed rule change will have an impact or impose any burden on competition.

(C) Self-Regulatory Organization's Statement on Comments on the Proposed Rule Change Received From Members, Participants, or Others

Written comments relating to the proposed rule change have been solicited or received. FICC will notify the Commission of any written comments received by FICC.

III. Date of Effectiveness of the Proposed Rule Change and Timing for Commission Action

The foregoing rule change has become effective upon filing pursuant to Section 19(b)(3)(A)(ii) of the Act[5] and Rule 19b–4(f)(2)[6] thereunder because the proposed rule establishes or changes a due, fee, or other charge. At any time within sixty days of the filing of such rule change, the Commission may summarily abrogate such rule change if it appears to the Commission that such action is necessary or appropriate in the public interest, for the protection of investors, or otherwise in furtherance of the purposes of the Act.

IV. Solicitation of Comments

Interested persons are invited to submit written data, views, and arguments concerning the foregoing, including whether the proposed rule change is consistent with the Act. Comments may be submitted by any of the following methods:

Electronic Comments

- Use the Commission's Internet comment form (*http://www.sec.gov/rules/sro.shtml*) or
- Send an e-mail to *rule-comments@sec.gov.* Please include File Number SR–FICC–2004–20 on the subject line.

Paper Comments

- Send paper comments in triplicate to Jonathan G. Katz, Secretary, Securities and Exchange Commission, 450 Fifth Street, NW., Washington, DC 20549–0609.

All submissions should refer to File Number SR-FICC–2004–20. This file number should be included on the subject line if e-mail is used. To help the

[1] 15 U.S.C. 78s(b)(1).

[2] The Commission has modified the text of the summaries prepared by FICC.

[3] Securities Exchange Act Release No. 50389 (September 15, 2004), 69 FR 56810.

[4] 15 U.S.C. 78q–1.

[5] 15 U.S.C. 78s(b)(3)(A)(ii).

[6] 17 CFR 240.19b–4(f)(2).

Commission process and review your comments more efficiently, please use only one method. The Commission will post all comments on the Commission's Internet Web site (*http://www.sec.gov/rules/sro.shtml*). Copies of the submission, all subsequent amendments, all written statements with respect to the proposed rule change that are filed with the Commission, and all written communications relating to the proposed rule change between the Commission and any person, other than those that may be withheld from the public in accordance with the provisions of 5 U.S.C. 552, will be available for inspection and copying in the Commission's Public Reference Section, 450 Fifth Street, NW., Washington, DC 20549. Copies of such filing also will be available for inspection and copying at the principal office of FICC and on FICC's Web site at *http://www.FICC.com/legal.* All comments received will be posted without change; the Commission does not edit personal identifying information from submissions. You should submit only information that you wish to make available publicly. All submissions should refer to File Number SR–FICC–2004–20 and should be submitted on or before December 29, 2004.

For the Commission by the Division of Market Regulation, pursuant to delegated authority.[7]

Margaret H. McFarland,

Deputy Secretary.

[FR Doc. E4–3533 Filed 12–7–04; 8:45 am]

BILLING CODE 8010–01–P

[7] 17 CFR 200.30–3(a)(12).

SECURITIES AND EXCHANGE COMMISSION

[Release No. 34–50779; File No. SR–CBOE–2004–78]

Self-Regulatory Organizations; Notice of Filing and Immediate Effectiveness of Proposed Rule Change by the Chicago Board Options Exchange, Incorporated To Extend a Pilot Program Relating to the Retail Automatic Execution System

December 1, 2004.

Pursuant to Section 19(b)(1) of the Securities Exchange Act of 1934 (''Act''),[1] and Rule 19b–4 [2] thereunder, notice is hereby given that on November 30, 2004 the Chicago Board Options Exchange, Incorporated (''CBOE'' or ''Exchange'') submitted to the Securities and Exchange Commission (''Commission'') the proposed rule change as described in Items I and II below, which Items have been prepared by the CBOE. The Commission is publishing this notice to solicit comments on the proposed rule change from interested persons.

[1] 15 U.S.C. 78s(b)(1).

[2] 17 CFR 240.19b–4.

I. Self-Regulatory Organization's Statement of the Terms of Substance of the Proposed Rule Change

The CBOE proposes to extend a pilot program relating to the operation of CBOE's Retail Automatic Execution System (''RAES'') until November 30, 2005 to allow broker-dealer orders that are eligible for execution on RAES pursuant to CBOE Rule 6.8, Interpretation and Policy .01 to automatically execute against customer limit orders on CBOE's book in classes designated by the appropriate Floor Procedure Committee (''Pilot''). The text of the proposed rule change is available at the Office of the Secretary, the Exchange, and at the Commission.

II. Self-Regulatory Organization's Statement of the Purpose of, and Statutory Basis for, the Proposed Rule Change

In its filing with the Commission, the Exchange included statements concerning the purpose of and basis for the proposed rule change and discussed any comments it received on the proposed rule change. The text of these statements may be examined at the places specified in Item IV below. The Exchange has prepared summaries, set forth in Sections A, B, and C below, of the most significant aspects of such statements.

A. Self-Regulatory Organization's Statement of the Purpose of, and Statutory Basis for, the Proposed Rule Change

1. Purpose

The purpose of this filing is to extend the Pilot until November 30, 2005 to allow broker-dealer orders that are eligible for execution on RAES pursuant to CBOE Rule 6.8, Interpretation and Policy .01 to automatically execute against customer limit orders on CBOE's book in classes designated by the appropriate Floor Procedure Committee. The pilot was originally approved on May 13, 2004.[3]

The Exchange's RAES system was created to allow for the automatic execution of retail customer options orders against CBOE market makers at their disseminated prices. In 1999, the Exchange expanded the RAES system to allow incoming RAES orders to execute against customer limit orders on the CBOE book when such booked orders constitute CBOE's best bid/offer.[4] Recently, the Exchange has allowed broker-dealer orders to be executed on RAES in classes/series designated by the appropriate Floor Procedure Committee.[5] The Pilot would allow these broker-dealer orders to automatically execute against the book.

[3] *See* Securities Exchange Act Release No. 49699 (May 13, 2004), 69 FR 28958 (May 19, 2004) (SR–CBOE–2003–42).

2. Statutory Basis

Because the proposed rule change will expand the number of orders eligible to trade automatically with booked customer limit orders, the Exchange believes the proposed rule change is consistent with Section 6(b) of the Act [6] in general, and furthers the objectives of Section 6(b)(5) of the Act [7] in particular, because it is designed to promote just and equitable principles of trade, to remove impediments to and perfect the mechanism of a free and open market and a national market system, and, in general, to protect investors and the public interest.

B. Self-Regulatory Organization's Statement on Burden on Competition

The Exchange believes that the proposed rule change will not impose any burden on competition that is not necessary or appropriate in furtherance of the purposes of the Act.

C. Self-Regulatory Organization's Statement on Comments on the Proposed Rule Change Received From Members, Participants or Others

No written comments were solicited or received with respect to the proposed rule change.

III. Date of Effectiveness of the Proposed Rule Change and Timing for Commission Action

Because the foregoing proposed rule does not (i) significantly affect the protection of investors or the public interest; (ii) impose any significant burden on competition; and (iii) become operative for 30 days from the date on which it was filed, or such shorter time as the Commission may designate if consistent with the protection of

[4] *See* Securities Exchange Act Release No. 41995 (October 8, 1999), 64 FR 56547 (October 20, 1999) (SR–CBOE–99–29).

[5] *See* Securities Exchange Act Release Nos. 45967 (May 20, 2002), 67 FR 37888 (May 30, 2002) (SR–CBOE–2002–22); 46113 (June 25, 2002), 67 FR 44486 (July 2, 2002) (SR–CBOE–2002–35); and 46598 (October 3, 2002), 67 FR 63478 (October 11, 2002) (SR–CBOE–2002–56).

[6] 15 U.S.C. 78f.

[7] 15 U.S.C. 78f(b)(5).

investors and the public interest, and because the Exchange provided the Commission with written notice of its intent to file the proposed rule change at least five days prior to the filing date, the proposed rule change has become effective pursuant to Section 19(b)(3)(A) of the Act[8] and Rule 19b–4(f)(6) thereunder.[9] At any time within 60 days of the filing of the proposed rule change, the Commission may summarily abrogate such rule change if it appears to the Commission that such action is necessary or appropriate in the public interest, for the protection of investors, or otherwise in furtherance of the purposes of the Act.

The Exchange requests that the Commission waive the 30-day delayed operative period under Rule 19b–4(f)(6)(iii).[10] The Exchange believes that the waiver of this period is appropriate because the filing merely extends the Pilot that has been in effect since May 13, 2004 and because the Pilot affords automatic executions to a greater number of market participants.

The Commission believes that it is consistent with the protection of investors and the public interest to waive the 30-day operative delay and make this proposed rule change immediately effective.[11] The Commission believes that the waiver of the 30-day operative delay will allow the Exchange to continue, without interruption, the existing operation of its Pilot for an additional year, expiring on November 30, 2005.

IV. Solicitation of Comments

Interested persons are invited to submit written data, views and arguments concerning the foregoing, including whether the proposed rule change is consistent with the Act. Comments may be submitted by any of the following methods:

Electronic Comments

- Use the Commission's Internet comment form (*http://www.sec.gov/rules/sro.shtml*); or
- Send an e-mail to *rule-comments@sec.gov*. Please include File Number SR–CBOE–2004–78 on the subject line.

Paper Comments

- Send paper comments in triplicate to Jonathan G. Katz, Secretary, Securities and Exchange Commission, 450 Fifth Street, NW., Washington, DC 20549–0609.

All submissions should refer to File Number SR–CBOE–2004–78. This file number should be included on the subject line if e-mail is used. To help the Commission process and review your comments more efficiently, please use only one method. The Commission will post all comments on the Commission's Internet Web site (*http://www.sec.gov/rules/sro.shtml*). Copies of the submission, all subsequent amendments, all written statements with respect to the proposed rule change that are filed with the Commission, and all written communications relating to the proposed rule change between the Commission and any person, other than those that may be withheld from the public in accordance with the provisions of 5 U.S.C. 552, will be available for inspection and copying in the Commission's Public Reference Room, 450 Fifth Street, NW., Washington, DC 20549. Copies of such filing also will be available for inspection and copying at the principal office of the CBOE. All comments received will be posted without change; the Commission does not edit personal identifying information from submissions. You should submit only information that you wish to make available publicly. All submissions should refer to File Number SR–CBOE–2004–78 and should be submitted on or before December 29, 2004.

For the Commission, by the Division of Market Regulation, pursuant to delegated authority.[12]

Margaret H. McFarland,

Deputy Secretary.

[FR Doc. E4–3534 Filed 12–7–04; 8:45 am]

BILLING CODE 8010–01–P

[8] 15 U.S.C. 78s(b)(3)(A).

[9] 17 CFR 240.19b–4(f)(6).

[10] 17 CFR 240.19b–4(f)(6)(iii).

[11] For purposes only of waiving the 30-day operative delay of this proposal, the Commission has considered the proposed rule's impact on efficiency, competition and capital formation. 15 U.S.C. 78c(f).

[12] 17 CFR 200.30–3(a)(12).

SECURITIES AND EXCHANGE COMMISSION

[Release No. 34–50778; File No. SR–ISE–2004–35]

Self-Regulatory Organizations; Notice of Filing and Immediate Effectiveness of Proposed Rule Change by the International Securities Exchange, Inc., Relating to an Ethernet Connection Fee

December 1, 2004.

Pursuant to Section 19(b)(1) of the Securities Exchange Act of 1934 (the ''Act''),[1] and Rule 19b–4 thereunder,[2] notice is hereby given that on November 29, 2004, the International Securities Exchange, Inc., (the ''Exchange'' or the ''ISE'') filed with the Securities and Exchange Commission (''Commission'') the proposed rule change as described in Items I, II and III below, which items have been prepared by the ISE. The Commission is publishing this notice to solicit comments on the proposed rule change from interested persons.

I. Self-Regulatory Organization's Statement of the Terms of Substance of the Proposed Rule Change

The ISE is proposing to amend its Schedule of Fees to adopt a fee for an Ethernet connection. The text of the proposed rule change is available at the Commission and the ISE.

II. Self-Regulatory Organization's Statement of the Purpose of, and Statutory Basis for, the Proposed Rule Change

In its filing with the Commission, the ISE included statements concerning the purpose of, and basis for, the proposed rule change and discussed any comments it received on the proposed rule change. The text of these statements may be examined at the places specified in Item IV below. The self-regulatory organization has prepared summaries, set forth in sections A, B and C below, of the most significant aspects of such statements.

A. Self-Regulatory Organization's Statement of the Purpose of, and Statutory Basis for, the Proposed Rule Change

1. Purpose

The purpose of this proposed rule change is to amend the ISE Schedule of Fees to establish a fee for members to access the ISE via an Ethernet connection. The Ethernet connection is a new method by which members can access the ISE's trading system. This connection will carry the same information (such as quotation and trade information) as other forms of connection (such as T–1 and T–3 point-to-point connections), and does not require any changes to the Exchange's surveillance or communications rules. The Exchange believes that there is no change to, or impact on, the Exchange's market structure as a result of the Ethernet connection.

An Ethernet connection enables users to acquire bandwidth in megabit increments. The Exchange proposes to add a new fee to our Network Fees establishing a charge of $25 per month per megabit for this connection. Members may buy connection speeds of

[1] 15 U.S.C. 78s(b)(1).

[2] 17 CFR 240.19b–4.

between one and 15 megabits. While members may have Ethernet connections at faster speeds, the ISE currently will limit any connection to the Exchange to a maximum of 15 megabits. The Exchange believes that the $25 per month per megabit fee is intended to cover ISE's costs on its end in providing Ethernet access to its members.

2. Statutory Basis

The Exchange believes that the proposal is consistent with Section 6(b) of the Act,[3] in general and Section 6(b)(4) of the Act,[4] in particular, in that it provides for the equitable allocation of reasonable dues, fees and other charges among its members and other persons using its facilities. In particular, the Exchange believes that the Ethernet connection fee would facilitate a new form of connectivity to the Exchange.

B. Self-Regulatory Organization's Statement on Burden on Competition

The Exchange does not believe that the proposed rule change will impose any burden on competition that is not necessary or appropriate in furtherance of the purposes of the Act.

C. Self-Regulatory Organization's Statement on Comments on the Proposed Rule Change Received From Members, Participants or Others

The Exchange has not solicited, and does not intend to solicit, comments on this proposed rule change. The Exchange has not received any unsolicited written comments from members or other interested parties with respect to the proposed rule change.

III. Date of Effectiveness of the Proposed Rule Change and Timing for Commission Action

The foregoing proposed rule change has become effective pursuant to Section 19(b)(3)(A)(ii) of the Act[5] and Rule 19b–4(f)(2) thereunder because it concerns a fee imposed by the Exchange.[6] At any time within 60 days of the filing of the proposed rule change, the Commission may summarily abrogate such rule change if it appears to the Commission that such action is necessary or appropriate in the public interest, for the protection of investors, or otherwise in furtherance of the purposes of the Act.

IV. Solicitation of Comments

Interested persons are invited to submit written data, views, and arguments concerning the foregoing, including whether the proposed rule change is consistent with the Act. Comments may be submitted by any of the following methods:

Electronic Comments

- Use the Commission's Internet comment form (*http://www.sec.gov/rules/sro.shtml*); or
- Send an e-mail to *rule-comments@sec.gov.* Please include File Number SR–ISE–2004–35 on the subject line.

Paper Comments

- Send paper comments in triplicate to Jonathan G. Katz, Secretary, Securities and Exchange Commission, 450 Fifth Street, NW., Washington, DC 20549–0609.

All submissions should refer to File Number SR–ISE–2004–35. This file number should be included on the subject line if e-mail is used. To help the Commission process and review your comments more efficiently, please use only one method. The Commission will post all comments on the Commission's Internet Web site (*http://www.sec.gov/rules/sro.shtml*). Copies of the submission, all subsequent amendments, all written statements with respect to the proposed rule change that are filed with the Commission, and all written communications relating to the proposed rule change between the Commission and any person, other than those that may be withheld from the public in accordance with the provisions of 5 U.S.C. 552, will be available for inspection and copying in the Commission's Public Reference Room. Copies of such filing also will be available for inspection and copying at the principal office of the ISE. All comments received will be posted without change; the Commission does not edit personal identifying information from submissions. You should submit only information that you wish to make available publicly. All submissions should refer to File Number SR–ISE–2004–35 and should be submitted on or before December 29, 2004.

For the Commission, by the Division of Market Regulation, pursuant to delegated authority.[7]

Margaret H. McFarland,

Deputy Secretary.

[FR Doc. E4–3536 Filed 12–7–04; 8:45 am]

BILLING CODE 8010–01–P

[3] 15 U.S.C. 78f(b).

[4] 15 U.S.C. 78f(b)(4).

[5] 15 U.S.C. 78s(b)(3)(A)(ii).

[6] 17 CFR 240.19b–4(f)(2).

[7] 17 CFR 200.30–3(a)(12).

SECURITIES AND EXCHANGE COMMISSION

[Release No. 34–50780; File No. SR–NSCC–2004–08]

Self-Regulatory Organizations; National Securities Clearing Corporation; Notice of Filing and Immediate Effectiveness of a Proposed Rule Change Relating to the Fee Schedule for Fixed Income Products

December 1, 2004.

Pursuant to Section 19(b)(1) of the Securities Exchange Act of 1934 (''Act''),[1] notice is hereby given that on November 10, 2004, the National Securities Clearing Corporation (''NSCC'') filed with the Securities and Exchange Commission (''Commission'') the proposed rule change as described in Items I, II, and III below, which items have been prepared primarily by NSCC. The Commission is publishing this notice to solicit comments on the proposed rule change from interested persons.

I. Self-Regulatory Organization's Statement of the Terms of Substance of the Proposed Rule Change

The proposed rule change amends the trade comparison and trade recording fees relating to NSCC's fixed income products. The proposed fee changes will become effective January 1, 2005.

II. Self-Regulatory Organization's Statement of the Purpose of, and Statutory Basis for, the Proposed Rule Change

In its filing with the Commission, NSCC included statements concerning the purpose of and basis for the proposed rule change and discussed any comments it received on the proposed rule change. The text of these statements may be examined at the places specified in Item IV below. NSCC has prepared summaries, set forth in sections (A), (B), and (C) below, of the most significant aspects of such statements.[2]

(A) Self-Regulatory Organization's Statement of the Purpose of, and Statutory Basis for, the Proposed Rule Change

NSCC's implementation of its real-time trade matching service (''RTTM'') has provided its corporate bond, municipal security, and unit investment trust (collectively, ''CMU'') participants with several benefits including real-time trade status information, reduced intraday exposures related to market

[1] 15 U.S.C. 78s(b)(1).

[2] The Commission has modified parts of these statements.

risk, and a single pipeline for fixed income submissions in a standardized format for both trade matching and regulatory price reporting. Additionally, the RTTM Web service provides an input vehicle which offers real-time trade status information, sophisticated search tools, and report storage capabilities.

Currently there are two separate fees, one for trade recording ($0.45) and one for trade comparison ($0.75). Because the same process is used for both of these functions, NSCC believes that charging two different fee amounts for them is no longer justified. Furthermore, NSCC is proposing that they each be increased to $1.00.

NSCC believes that the proposed rule change is consistent with the requirements of Section 17A of the Act and the rules and regulations thereunder because it provides for a reasonable fee to cover costs.

(B) Self-Regulatory Organization's Statement on Burden on Competition

NSCC does not believe the proposed rule change will have any impact or impose any burden on competition.

(C) Self-Regulatory Organization's Statement on Comments on the Proposed Rule Change Received From Members, Participants, or Others

Written comments relating to the proposed rule change have not yet been solicited nor received. NSCC will notify the Commission of any written comments received by NSCC.

III. Date of Effectiveness of the Proposed Rule Change and Timing for Commission Action

Because the foregoing rule change changes fees imposed by NSCC, it has become effective pursuant to Section 19(b)(3)(A)(ii) of the Act [3] and Rule 19b–4(f)(2) [4] promulgated thereunder. At any time within sixty days of the filing of the proposed rule change, the Commission may summarily abrogate such rule change if it appears to the Commission that such action is necessary or appropriate in the public interest, for the protection of investors, or otherwise in furtherance of the purposes of the Act.

IV. Solicitation of Comments

Interested persons are invited to submit written data, views, and arguments concerning the foregoing, including whether the proposed rule change is consistent with the Act.

[3] 15 U.S.C. 78s(b)(3)(A)(ii).

[4] 17 CFR 240.19b–4(f)(2).

Comments may be submitted by any of the following methods:

Electronic Comments

- Use the Commission's Internet comment form (*http://www.sec.gov/rules/sro.shtml*) or
- Send an e-mail to *rule-comments@sec.gov.* Please include File Number SR–NSCC–2004–08 on the subject line.

Paper Comments

- Send paper comments in triplicate to Jonathan G. Katz, Secretary, Securities and Exchange Commission, 450 Fifth Street, NW., Washington, DC 20549–0609.

All submissions should refer to File Number SR–NSCC–2004–08. This file number should be included on the subject line if e-mail is used. To help the Commission process and review your comments more efficiently, please use only one method. The Commission will post all comments on the Commission's Internet Web site (*http://www.sec.gov/rules/sro.shtml*). Copies of the submission, all subsequent amendments, all written statements with respect to the proposed rule change that are filed with the Commission, and all written communications relating to the proposed rule change between the Commission and any person, other than those that may be withheld from the public in accordance with the provisions of 5 U.S.C. 552, will be available for inspection and copying in the Commission's Public Reference Section, 450 Fifth Street, NW., Washington, DC 20549. Copies of such filing also will be available for inspection and copying at the principal office of NSCC and on NSCC's Web site at *http://www.nscc.com.* All comments received will be posted without change; the Commission does not edit personal identifying information from submissions. You should submit only information that you wish to make available publicly. All submissions should refer to File Number SR–NSCC–2004–08 and should be submitted on or before December 21, 2004.

For the Commission, by the Division of Market Regulation, pursuant to delegated authority.[5]

Margaret H. McFarland,

Deputy Secretary.

[FR Doc. E4–3532 Filed 12–7–04; 8:45 am]

BILLING CODE 8010–01–P

[5] 17 CFR 200.30–3(a)(12).

SECURITIES AND EXCHANGE COMMISSION

[Release No. 34–50777; File No. SR–NYSE–2004–67]

Self-Regulatory Organizations; Notice of Filing and Immediate Effectiveness of Proposed Rule Change by the New York Stock Exchange, Inc., To Extend its Pilot Program Permitting a Floor Broker to Use an Exchange Authorized and Provided Portable Phone on the Exchange Floor

December 1, 2004.

Pursuant to Section 19(b)(1) of the Securities Exchange Act of 1934 (''Act''),[1] and Rule 19b–4 thereunder,[2] notice is hereby given that on November 22, 2004, the New York Stock Exchange, Inc., (''NYSE'' or ''Exchange'') filed with the Securities and Exchange Commission (''Commission'') the proposed rule change as described in Items I and II below, which Items have been prepared by the Exchange. The Commission is publishing this notice to solicit comments on the proposed rule change from interested persons.

I. Self-Regulatory Organization's Statement of the Terms of Substance of the Proposed Rule Change

The Exchange proposes to extend its pilot program that amends NYSE Rule 36 (Communication Between Exchange and Members' Offices) to allow a Floor broker's use of an Exchange authorized and provided portable telephone on the Exchange Floor upon approval by the Exchange (''Pilot'') until March 31, 2005. The Pilot was in effect on a five-month pilot basis expiring on November 30, 2004.[3] The text of the proposed rule change is available at the Office of the Secretary, the Exchange, and at the Commission.

II. Self-Regulatory Organization's Statement of the Purpose of, and Statutory Basis for, the Proposed Rule Change

In its filing with the Commission, the Exchange included statements concerning the purpose of and basis for the proposed rule change and discussed any comments it received on the proposed rule change. The text of these statements may be examined at the places specified in Item IV below. The Exchange has prepared summaries, set forth in Sections A, B, and C below, of the most significant aspects of such statements.

[1] 15 U.S.C. 78s(b)(1).

[2] 17 CFR 240.19b–4.

[3] *See* Securities Exchange Act Release No. 49954 (July 1, 2004), 69 FR 41323 (July 8, 2004) (SR–NYSE–2004–30).

A. Self-Regulatory Organization's Statement of the Purpose of, and Statutory Basis for, the Proposed Rule Change

1. Purpose

The Commission originally approved the Pilot to be implemented as a six-month pilot[4] beginning no later than June 23, 2003.[5] The Exchange extended the Pilot for an additional six months ending on June 16, 2004.[6] The Exchange further extended the Pilot for an additional five months ending on November 30, 2004.[7] The Exchange represents that no regulatory actions or administrative or technical problems, other than routine telephone maintenance issues, have resulted from the Pilot over the past few months. Therefore, the Exchange seeks to extend the Pilot for an additional four months, until March 31, 2005.

NYSE Rule 36 governs the establishment of telephone or electronic communications between the Exchange's Trading Floor and any other location. Prior to the Pilot, NYSE Rule 36.20 prohibited the use of portable telephone communications between the Trading Floor and any off-Floor location, and the only way that voice communication could be conducted by Floor brokers between the Trading Floor and an off-Floor location was by means of a telephone located at a broker's booth. These communications often involved a customer calling a broker at the booth for ''market look'' information. Prior to the Pilot, a broker could not use a portable phone at the point of sale in the trading crowd to speak with a person located off the Floor.

The Exchange proposes to extend the Pilot until March 31, 2005. The Pilot would amend NYSE Rule 36 to permit a Floor broker to use an Exchange authorized and issued portable telephone on the Floor. Thus, with the approval of the Exchange, a Floor broker would be permitted to engage in direct voice communication from the point of sale to an off-Floor location, such as a member firm's trading desk or the office of one of the broker's customers. Such communications would permit the broker to accept orders consistent with Exchange rules, provide status and oral execution reports as to orders previously received, as well as ''market look'' observations as have historically been routinely transmitted from a broker's booth location. Use of a portable telephone on the Exchange Floor other than one authorized and issued by the Exchange would continue to be prohibited.

Furthermore, both incoming and outgoing calls would continue to be allowed, provided the requirements of all other Exchange rules have been met. Under NYSE Rule 123(d), a broker would not be permitted to represent and execute any order received as a result of such voice communication unless the order was first properly recorded by the member and entered into the Exchange's Front End Systemic Capture (''FESC'') electronic database.[8] In addition, Exchange rules require that any Floor broker receiving orders from the public over portable phones must be properly qualified to engage in such direct access business under NYSE Rules 342 and 345, among others.[9]

In addition, orders in Investment Company Units (as defined in Section 703.16 of Listed Company Manual), also known as Exchange-Traded Funds (''ETFs''), would also be subject to the same FESC requirements as orders in any other security listed on the Exchange.[10] As a result, the Pilot would continue to allow for the use of portable phones for orders in ETFs.[11]

The Exchange believes that the extension of the Pilot for an additional four months would enable the Exchange to provide more direct, efficient access to its trading crowds and customers, increase the speed of transmittal of orders and the execution of trades, and provide an enhanced level of service to customers in an increasingly competitive environment.[12] By enabling customers to speak directly to a Floor broker in a trading crowd on an Exchange authorized and issued portable telephone, the Exchange believes that the proposed rule change would expedite and make more direct the free flow of information which, prior to the Pilot, had to be transmitted somewhat more circuitously via the broker's booth.

In addition, NYSE Rule 36.20, both prior to the Pilot, and as proposed to be amended, would not apply to specialists who are prohibited from speaking from the post to upstairs trading desks or customers. The Exchange notes that specialists are subject to separate restrictions in NYSE Rule 36 on their ability to engage in voice communications from the specialist post to an off-Floor location.[13]

Pilot Program Results

Since the Pilot's inception, the Exchange represents that there have been approximately 800 portable phone subscribers. In addition, with regard to portable phone usage, for a sample week of July 12, 2004 through July 16, 2004, an average of 16,608 calls per day were originated from portable phones, and an average of 5,219 calls per day were received on portable phones. Of the calls originated from portable phones, an average of 13,271 calls per day were internal calls to the booth, and 3,337 calls per day were external calls. Thus, over 80% of the calls originated from portable phones were internal calls to the booth. With regard to received calls, of the 5,219 average calls per day received, an average of 2,447 calls per day were external calls, and an average of 2,772 calls per day were internal calls received from the booth. Thus, approximately 53% of all received calls

[4] *See* Securities Exchange Act Release No. 47671 (April 11, 2003), 68 FR 19048 (April 17, 2003) (SR–NYSE–2002–11) (''Original Order'').

[5] *See* Securities Exchange Act Release No. 47992 (June 5, 2003), 68 FR 35047 (June 11, 2003) (SR–NYSE–2003–19) (delaying the implementation date for portable phones from on or about May 1, 2003 to no later than June 23, 2003).

[6] *See* Securities Exchange Act Release No. 48919 (December 12, 2004), 68 FR 70853 (December 19, 2003) (SR–NYSE–2004–38).

[7] *See* note 3, *supra*.

[8] *See* Securities Exchange Act Release No. 43689 (December 7, 2000), 65 FR 79145 (December 18, 2000) (SR–NYSE–98–25). *See also* Securities Exchange Act Release No. 44943 (October 16, 2001), 66 FR 53820 (October 24, 2001) (SR–NYSE–2001–39) (discussing certain exceptions to FESC, such as orders to offset an error, or a bona fide arbitrage, which may be entered within 60 seconds after a trade is executed).

[9] For more information regarding Exchange requirements for conducting a public business on the Exchange Floor, *see* Information Memos 01–41 (November 21, 2001), 01–18 (July 11, 2001) (available on *http://www.nyse.com/regulation*) and 91–25 (July 8, 1991).

[10] Previously, under an exception to NYSE Rule 123(e), orders in ETFs could first be executed and then entered into FESC. However, in SR–NYSE–2003–09, the Exchange eliminated the exception to NYSE Rule 123(e) for ETFs, and, as part of its proposal in SR–NYSE–2002–11, allowed the use of portable phones for orders in ETFs. *See* Securities Exchange Act Release No. 47667 (April 11, 2003), 68 FR 19063 (April 17, 2003). NYSE Rule 123(e) provides that all orders in any security traded on the Exchange be entered into FESC before they can be represented in the Exchange's auction market.

[11] Telephone conversation between Jeffrey Rosenstrock, Senior Special Counsel, NYSE and Marisol Rubecindo, Attorney, Division of Market Regulation, Commission, dated November 30, 2004.

[12] *See, e.g.,* Securities Exchange Act Release No. 43493 (October 30, 2000), 65 FR 67022 (November 8, 2000) (SR–CBOE–00–04) (expanding the Chicago Board Options Exchange, Inc.'s existing policy and rules governing the use of telephones at equity option trading posts by allowing for the receipt of orders over outside telephone lines, from any source, directly at equity trading posts), and Securities Exchange Act Release No. 43836 (January 11, 2001), 66 FR 6727 (January 22, 2001) (SR–PCX–00–33) (discussing and approving the Pacific Exchange, Inc.'s proposal to remove current prohibitions against Floor brokers' use of cellular or cordless phones to make calls to persons located off the trading floor).

[13] *See* Securities Exchange Act Release No. 46560 (September 26, 2002), 67 FR 62088 (October 3, 2002) (SR–NYSE–00–31) (discussing restrictions on specialists' communications from the post).

were internally generated, and 47% were calls from the outside.

The Exchange represents that no regulatory actions or administrative or technical problems, other than routine telephone maintenance issues, have resulted from the Pilot since its inception. The Exchange believes that the Pilot appears to be successful in that there is a reasonable degree of usage of portable phones, but as noted earlier, no regulatory or administrative or technical problems associated with their usage. The Exchange believes that the Pilot appears to facilitate communication on the Floor without any corresponding drawbacks. Accordingly, the Exchange believes it is appropriate to extend the Pilot until March 31, 2005.

2. Statutory Basis

The Exchange believes that the proposed rule change is consistent with Section 6(b) of the Act [14] in general, and furthers the objectives of Section 6(b)(5) of the Act [15] in particular, in that it is designed to promote just and equitable principles of trade, to remove impediments to and perfect the mechanism of a free and open market and a national market system and, in general, to protect investors and the public interest. The Exchange believes that the amendment to NYSE Rule 36 would support the mechanism of free and open markets by providing for increased means by which communications to and from the Floor of the Exchange may take place.

B. Self-Regulatory Organization's Statement on Burden on Competition

The Exchange does not believe that the proposed rule change will impose any burden on competition that is not necessary or appropriate in furtherance of the purposes of the Act.

C. Self-Regulatory Organization's Statement on Comments on the Proposed Rule Change Received From Members, Participants or Others

The Exchange has neither solicited nor received written comments on the proposed rule change.

III. Date of Effectiveness of the Proposed Rule Change and Timing for Commission Action

Because the foregoing proposed rule change does not: (i) Significantly affect the protection of investors or the public interest; (ii) Impose any significant burden on competition; and (iii) Become operative for 30 days from the date on which it was filed, or such shorter time as the Commission may designate if consistent with the protection of investors and the public interest, it has become effective pursuant to Section 19(b)(3)(A) of the Act [16] and Rule 19b–4(f)(6) thereunder.[17] At any time within 60 days of the filing of the proposed rule change, the Commission may summarily abrogate such rule change if it appears to the Commission that such action is necessary or appropriate in the public interest, for the protection of investors, or otherwise in furtherance of the purposes of the Act.

The Exchange requests that the Commission waive the five-day pre-filing period and 30-day operative period under Rule 19b–4(f)(6)(iii).[18] The Exchange believes that the continuation of the Pilot is in the public interest as it will avoid inconvenience and interruption to the public. The Commission believes that it is consistent with the protection of investors and the public interest to waive the five-day pre-filing period and the 30-day operative delay and make this proposed rule change immediately effective upon filing on November 22, 2004.[19] The Commission believes that the waiver of the 30-day operative delay will allow the Exchange to continue, without interruption, the existing operation of its Pilot until March 31, 2005.

The Commission notes that proper surveillance is an essential component of any telephone access policy to an Exchange Trading Floor. Surveillance procedures should help to ensure that Floor brokers who are interacting with the public on portable phones are authorized to do so, as NYSE Rule 36 requires,[20] and that orders are being handled in compliance with NYSE rules. The Commission expects the Exchange to actively review these procedures and address any potential concerns that have arisen during the extension of the Pilot. The Commission also requests that the Exchange report any problems, surveillance or enforcement matters associated with the Floor brokers' use of an Exchange authorized and provided portable telephone on the Floor. As stated in the Original Order, the NYSE should also address whether additional surveillance would be needed because of the derivative nature of the ETFs. Furthermore, in any future additional filings on the Pilot, we would expect that the NYSE submit information documenting the usage of the phones, any problems that have occurred, including, among other things, any regulatory actions or concerns, and any advantages or disadvantages that have resulted.[21]

IV. Solicitation of Comments

Interested persons are invited to submit written data, views, and arguments concerning the foregoing, including whether the proposed rule change is consistent with the Act. Comments may be submitted by any of the following methods:

Electronic Comments

- Use the Commission's Internet comment for (*http://www.sec.gov/rules/sro.shtml*); or
- Send an e-mail to *rule-comments@sec.gov.* Please include File Number SR–NYSE–2004–67 on the subject line.

Paper Comments

- Send paper comments in triplicate to Jonathan G. Katz, Secretary, Securities and Exchange Commission, 450 Fifth Street, NW., Washington, DC 20549–0609.

All submissions should refer to File Number SR–NYSE–2004–67. This file number should be included on the subject line if e-mail is used. To help the Commission process and review your comments more efficiently, please use only one method. The Commission will post all comments on the Commission's Internet Web site (*http://www.sec.gov/rules/sro.shtml*). Copies of the submission, all subsequent amendments, all written statements with respect to the proposed rule change that are filed with the Commission, and all written communications relating to the proposed rule change between the Commission and any person, other than those that may be withheld from the public in accordance with the provisions of 5 U.S.C. 552, will be available for inspection and copying in the Commission's Public Reference Room. Copies of the filing also will be available for inspection and copying at the principal office of the NYSE. All comments received will be posted without change; the Commission does not edit personal identifying

[14] 15 U.S.C. 78f(b).

[15] 15 U.S.C. 78f(b)(5).

[16] 15 U.S.C. 78s(b)(3)(A).

[17] 17 CFR 240.19b–4(f)(6).

[18] 17 CFR 240.19b–4(f)(6)(iii).

[19] For purposes only of waiving the 30-day operative delay of this proposal, the Commission has considered the proposed rule's impact on efficiency, competition and capital formation. 15 U.S.C. 78c(f).

[20] *See* note 9 *supra*, and accompanying text for other NYSE requirements that Floor brokers be properly qualified before doing public customer business.

[21] This information along with any proposal to extend the pilot should be submitted at least one to two months prior to the expiration of the four-month pilot.

information from submissions. You should submit only information that you wish to make available publicly. All submissions should refer to File Number SR–NYSE–2004–67 and should be submitted on or before December 29, 2004.

For the Commission, by the Division of Market Regulation, pursuant to delegated authority.[22]

Margaret H. McFarland,

Deputy Secretary.

[FR Doc. E4–3535 Filed 12–7–04; 8:45 am]

BILLING CODE 8010–01–P

SECURITIES AND EXCHANGE COMMISSION

[Release No. 34–50776; File No. SR–Phlx–2004–80]

Self-Regulatory Organizations; Philadelphia Stock Exchange, Inc.; Notice of Filing and Immediate Effectiveness of Proposed Rule Change Relating to Automatic Execution of Certain Orders in PACE During Locked Markets

December 1, 2004.

Pursuant to Section 19(b)(1) of the Securities Exchange Act of 1934 (''Act''),[1] and Rule 19b–4 [2] thereunder, notice is hereby given that on November 23, 2004, the Philadelphia Stock Exchange, Inc. (''Phlx'' or ''Exchange'') filed with the Securities and Exchange Commission (''Commission'') the proposed rule change as described in Items I and II below, which Items have been prepared by the Phlx. The Commission is publishing this notice to solicit comments on the proposed rule change from interested persons.

I. Self-Regulatory Organization's Statement of the Terms of Substance of the Proposed Rule Change

The Phlx proposes to amend Phlx Rule 229 to allow PACE [3] orders to automatically execute when the market for the security is locked, as chosen by specialists, on a security by security basis. Such orders would be automatically executed at the locked price when they are within the specialist automatic execution parameters. The text of amended Exchange Rule is set forth below. Proposed new language is italicized; proposed deletions are in brackets.

Rule 229. Philadelphia Stock Exchange Automated Communication and Execution System (PACE)

Supplementary Material: * * *

.01—.04 No Change.

.05 Public Order Exposure System—Subject to Supplementary Material Section .07, all round-lot market orders up to 500 shares and PRL market orders up to 599 shares will be stopped at the PACE Quote at the time of entry into the system (''Stop Price'') and be subject to a delay of up to 30 seconds from being executed in order to receive an opportunity for price improvement. If such market order is not executed within the 30 second window, the order will be automatically executed at the Stop Price. If the PACE Quote at the time of order entry into the system reflects a point spread (the difference between the best bid and offer) of $.05 or less for equities trading in decimals, pursuant to Rule 134 or 125, that order will be executed immediately without the 30 second delay. Subject to these procedures, the specialist may voluntarily agree to execute round-lot market orders of a size greater than 500 shares and PRL market orders of a size greater than 599 shares upon entry into the system. Where the specialist has voluntarily agreed to automatically execute market orders greater than 599 shares and the market order size is greater than 599 shares, but less than or equal to the size of the PACE Quote, the order is automatically executable at the PACE Quote; if such order is greater than the size of the PACE Quote, the order shall receive an execution at the PACE Quote up to the size of the PACE Quote, either manually or automatically (once this feature is implemented) with the balance of the order receiving a professional execution, in accordance with Supplementary Material, .10(b) below; provided that the specialist may guarantee an automatic execution at the PACE Quote up to the entire size of such specialist's automatic execution guarantee (regardless of the size of the PACE Quote).

When the PACE Quote is locked, [in a Trust Share or Trust Issued Receipt,] automatically executable market orders entered after the opening will be automatically executed at the locked price, if *all* the specialist *assigned to a security* determine[s] to elect this feature for a particular security.

.06–.09 No Change.[4]

.10(a) In the case of stocks for which the PACE quote bid is less than $1.00, the provisions of paragraph .10(b) shall apply.

In the case of stocks for which the PACE quote bid is $1.00 or more:

(i) Marketable Limit Orders—round-lot orders up to 500 shares and the round-lot portion of PRL limit orders up to 599 shares which are entered at the PACE Quote shall be executed at the PACE Quote. Such orders shall be executed automatically unless the member organization entering orders otherwise elects. Specialists may voluntarily agree to execute marketable limit orders greater than 599 shares. Where the specialist has voluntarily agreed to automatically execute marketable limit orders greater than 599 shares and the order size is greater than 599 shares, but less than or equal to the size of the PACE Quote, the marketable limit order is automatically executable at the PACE Quote; if the order size is greater than 599 shares and greater than the size of the PACE Quote, the marketable limit order shall manually receive an execution at the PACE Quote up to the size of the PACE Quote, with the balance of the order receiving a professional execution, in accordance with Supplementary Material, .10(b) below; provided that the specialist may guarantee an automatic execution at the PACE Quote up to the entire size of such specialist's automatic execution guarantee.

When the PACE Quote is locked, [in a Trust Share or Trust Issued Receipt,] automatically executable marketable limit orders entered after the opening will be automatically executed at the locked price, if *all* the specialist*s assigned to a security* determine[s] to elect this feature for a particular security.

Marketable limit orders may be eligible for automatic price improvement or manual double-up/double-down price protection pursuant to Supplementary Material .07(c) above.

.10(a)(ii)–(iii) No Change.

.10(b) and (c) No Change.

.11–.22 No Change.

II. Self-Regulatory Organization's Statement of the Purpose of, and Statutory Basis for, the Proposed Rule Change

In its filing with the Commission, the Phlx included statements concerning the purpose of and basis for the proposed rule change and discussed any comments it received on the proposed rule change. The text of these statements

[22] 17 CFR 200.30–3(a)(12).

[1] 15 U.S.C. 78s(b)(1).

[2] 17 CFR 240.19b–4.

[3] PACE is the Exchange's automated order routing, delivery, execution and reporting system for equities. *See* Phlx Rule 229.

[4] With the Exchange's consent, the Commission has made a technical correction to the text of the proposed rule change. Telephone conversation between John Dayton, Assistant Secretary and Counsel, Phlx, and Terri Evans, Senior Special Counsel, Division, Commission, on November 29, 2004 (changing ''.07–.09 No Change'' to ''.06–.09 No Change'').

may be examined at the places specified in Item IV below. The Phlx has prepared summaries, set forth in Sections A, B, and C below, of the most significant aspects of such statements.

A. Self-Regulatory Organization's Statement of the Purpose of, and Statutory Basis for, the Proposed Rule Change

1. Purpose

The purpose of the proposed rule change is to increase the specialists' efficiency and turnaround time for orders that are received during a locked market. This proposed rule change would allow specialists trading any security [5] to elect to automatically execute all eligible PACE orders that are within the specialist's automatic execution parameters when the market for such security is locked.[6] This proposed rule change expands this feature to all securities, which is currently available only to specialists in Trust Shares and Trust Issued Receipts.[7]

Currently, during a locked market, market and marketable limit orders are not executed automatically, but rather are handled manually by the specialist. This proposed rule change should increase the efficiency of order handling by eliminating the necessity to deal with these orders manually. The quality of the execution of these orders should be improved and enhanced, as execution time should be reduced while the orders continue to receive the best bid or offer (in this case, the locked price).

2. Statutory Basis

The Exchange believes that its proposal is consistent with Section 6(b) of the Act [8] in general, and furthers the objectives of Section 6(b)(5) of the Act [9] in particular, in that it should promote just and equitable principles of trade, remove impediments to and perfect the mechanism of a free and open market and a national market system, and, in general, protect investors and the public interest by increasing automated order handling.

B. Self-Regulatory Organization's Statement on Burden on Competition

The Exchange does not believe that the proposed rule change will impose any inappropriate burden on competition.

C. Self-Regulatory Organization's Statement on Comments on the Proposed Rule Change Received From Members, Participants, or Others

No written comments were either solicited or received.

III. Date of Effectiveness of the Proposed Rule Change and Timing for Commission Action

Because the foregoing proposed rule change does not:

(i) Significantly affect the protection of investors or the public interest;

(ii) Impose any significant burden on competition; and

(iii) Become operative for 30 days from the date on which it was filed, or such shorter time as the Commission may designate, it has become effective pursuant to Section 19(b)(3)(A) of the Act [10] and Rule 19b–4(f)(6) thereunder.[11]

The Exchange has requested that the Commission waive the 30-day operative delay specified in Rule 19b–4(f)(6) to allow the Exchange to make this feature available to its specialists as soon as possible. According to the Exchange, this should allow specialists to increase their efficiency and turnaround time for orders that are received during locked markets. The Exchange has further represented that it has not experienced any problems with orders for Trust Shares and Trust Issued Receipts receiving the locked price nor received any customer complaints.[12]

The Commission believes that waiving the 30-day operative delay is consistent with the protection of investors and the public interest.[13] By waiving the operative delay, all specialists on the Exchange will be able to automatically execute eligible PACE orders when the market for a particular security is locked, not just specialists in Trust Shares and Trust Issued Receipts. Further the Commission notes that the Exchange has represented that there have been no problems or complaints with respect to this feature for Trust Shares or Trust Issued Receipts.

At any time within 60 days of the filing of the proposed rule change, the Commission may summarily abrogate such rule change if it appears to the Commission that such action is necessary or appropriate in the public interest, for the protection of investors, or otherwise in furtherance of the purposes of the Act.

IV. Solicitation of Comments

Interested persons are invited to submit written data, views, and arguments concerning the foregoing, including whether the proposed rule change is consistent with the Act. Comments may be submitted by any of the following methods:

Electronic Comments

- Use the Commission's Internet comment form (*http://www.sec.gov/rules/sro.shtml*); or
- Send an e-mail to *rule-comments@sec.gov.* Please include File Number SR–Phlx–2004–80 on the subject line.

Paper Comments

- Send paper comments in triplicate to Jonathan G. Katz, Secretary, Securities and Exchange Commission, 450 Fifth Street, NW., Washington, DC 20549–0609.

All submissions should refer to File Number SR–Phlx–2004–80. This file number should be included on the subject line if e-mail is used. To help the Commission process and review your comments more efficiently, please use only one method. The Commission will post all comments on the Commission's Internet Web site (*http://www.sec.gov/rules/sro.shtml*). Copies of the submission, all subsequent amendments, all written statements with respect to the proposed rule change that are filed with the Commission, and all written communications relating to the proposed rule change between the Commission and any person, other than those that may be withheld from the public in accordance with the provisions of 5 U.S.C. 552, will be available for inspection and copying in the Commission's Public Reference Room. Copies of the filing also will be available for inspection and copying at the principal office of the Phlx.

All comments received will be posted without change; the Commission does not edit personal identifying information from submissions. You should submit only information that you wish to make available publicly. All submissions should refer to File

[5] The Exchange will provide notice as to which securities will be subject to the new automation feature. This notice will be provided initially when the selection occurs, and subsequently each time the specialist selects or deselects this feature.

[6] As stated in the proposed changes to Phlx Rule 229, if there are competing specialists in a security, this feature will be available only if all the specialists assigned to a security determine to elect this feature for a particular security.

[7] *See* Securities Exchange Act Release No. 49456 (March 22, 2004), 69 FR 16331 (March 29, 2004) (SR–Phlx–2004–19).

[8] 15 U.S.C. 78f(b).

[9] 15 U.S.C. 78f(b)(5).

[10] 15 U.S.C. 78s(b)(3)(A).

[11] 17 CFR 240.19b–4(f)(6).

[12] Telephone conversation between John Dayton, Assistant Secretary and Counsel, Phlx, and Terri Evans, Senior Special Counsel, Division, Commission, on December 1, 2004.

[13] For purposes of only waiving the operative date of the proposal, the Commission has considered the proposed rule's impact on efficiency, competition, and capital formation. 15 U.S.C. 78c(f).

Number SR–Phlx–2004–80 and should be submitted on or before December 29, 2004.

For the Commission, by the Division of Market Regulation, pursuant to delegated authority.[14]

Margaret H. McFarland,

Deputy Secretary.

[FR Doc. E4–3537 Filed 12–7–04; 8:45 am]

BILLING CODE 8010–01–P

OFFICE OF THE UNITED STATES TRADE REPRESENTATIVE

Recognition by Singapore of U.S. Law Schools Under the U.S.—Singapore Free Trade Agreement

AGENCY: Office of the United States Trade Representative.

ACTION: Request for comments concerning recognition by Singapore of U.S. law schools under the U.S.—Singapore Free Trade Agreement.

SUMMARY: The Office of the United States Trade Representative (USTR) is seeking public comment in selecting four U.S. law schools whose degrees will be recognized by Singapore for admission to the Singapore bar, as required under the U.S.—Singapore Free Trade Agreement.

DATES: Written comments are due by noon, Monday, January 3, 2005.

ADDRESSES: Submissions by electronic mail: *FR0511@ustr.eop.gov.* Submissions by facsimile: Janice Shields, Office of Southeast Asia, the Pacific and Pharmaceutical Policy, Office of the United States Trade Representative, (202) 395–6813. The public is strongly encouraged to submit documents electronically rather than by facsimile. (See requirements for submissions below.)

FOR FURTHER INFORMATION CONTACT: Questions should be directed to Elena Bryan, Deputy Assistant U.S. Trade Representative for Southeast Asia and the Pacific, (202) 395–6813 or Will Martyn, Associate General Counsel, (202) 395–3582.

SUPPLEMENTARY INFORMATION:

1. Background

The U.S.—Singapore Free Trade Agreement (''FTA'') entered into force on January 1, 2004. The text of the FTA, including side letters, can be found on the USTR Web site at *http://www.ustr.gov/Trade_Agreements/Bilateral/Singapore_FTA/Final_Texts/Section_Index.html.* As part of its obligations in the FTA, Singapore committed to the recognition of the degree of Doctor of Jurisprudence (''J.D.'') or equivalent law degree, conferred by one of four U.S. law schools to be designated later, for the purposes of admission into the Singapore Bar.

At the time of signature of the FTA, Singapore and the United States also signed a side letter on legal services, which establishes the following criteria for such recognition:

(a) Such recognition will only be conferred on persons who are Singapore citizens or Singapore Permanent Residents at the time they receive the J.D. or equivalent law degree from one of the four designated U.S. law schools;

(b) Such recognition will only apply to a J.D. or equivalent law degree obtained by a full-time internal candidate (as defined in Singapore legislation) after a 3-year course of study, the entire course of which was conducted within the United States;

(c) Such recognition will only be conferred on persons who have been ranked by the law school as being amongst the highest 40 percent, in terms of academic performance, of the total number of law school graduates in the same batch who have been conferred that degree by that law school; and

(d) The person seeking recognition must obtain the Diploma in Singapore law conferred by the National University of Singapore, attend and pass the Postgraduate Legal Practice Course organized by the Board of Legal Education, complete the prescribed periods of pupilage, and comply with all other requirements which may be imposed from time to time by Singapore on graduates from non-Singapore law schools provided that such additional requirements does not discriminate against graduates of U.S. law schools vis-á-vis graduates from other non-Singapore law schools.

Singapore has proposed that the law schools of Columbia University, Harvard University, New York University and Yale University be so designated.

2. Public Comment

USTR invites written comments on whether the law schools of Columbia University, Harvard University, New York University and Yale University should be designated as the four whose degrees will be recognized by Singapore. Submitters who oppose designation of one or more of these law schools should provide reasons for opposition, propose an alternative law school, and provide reasons that this alternative should be accepted.

Written comments must be received no later than noon, Monday, January 3, 2005.

3. Requirements for Submissions

In order to facilitate prompt processing of submissions, USTR strongly urges and prefers electronic (e-mail) submissions in response to this notice. In the event that an e-mail submission is impossible, submissions should be made by facsimile.

Persons making submissions by e-mail should use the following subject line: Singapore FTA-Law Schools' followed by ''Written Comments.'' Documents should be submitted as either Adobe PDF, WordPerfect, MSWord, or text (.TXT) files. Supporting documentation submitted as spreadsheets is acceptable as Quattro Pro or Excel. For any document containing business confidential information submitted electronically, the file name of the business confidential version should begin with the characters ''BC-''. A public version of the document should also be submitted, with a file name beginning with the characters ''P-''. The ''P-'' or ''BC-''should be followed by the name of the submitter. Persons who make submissions by e-mail should not provide separate cover letters; information that might appear in a cover letter should be included in the submission itself. Similarly, to the extent possible, any attachments to the submission should be included in the same file as the submission itself, and not as separate files.

All documents will be placed in a file open to public inspection pursuant to 15 CFR 2003.5, except confidential business information exempt from public inspection in accordance with 15 CFR 2003.6. Confidential business information submitted in accordance with 15 CFR 2003.6 must be clearly marked ''BUSINESS CONFIDENTIAL'' at the top of each page, including any cover letter or cover page, and must be accompanied by a nonconfidential summary of the confidential information. All public documents and nonconfidential summaries shall be available for public inspection in the USTR Reading Room. The USTR Reading Room is open to the public, by appointment only, from 10 a.m. to 12 noon and 1 p.m. to 4 p.m., Monday through Friday. An appointment to review the file may be made by calling (202) 395–6186. Appointments must be scheduled at least 48 hours in advance.

[14] 17 CFR 200.30–3(a)(12).

General information concerning USTR may be obtained by accessing its Internet Web site (*http://www.ustr.gov*).

Barbara Weisel,

Assistant United States Trade Representative.

[FR Doc. 04–26923 Filed 12–7–04; 8:45 am]

BILLING CODE 3190–W5–P

DEPARTMENT OF TRANSPORTATION

Federal Aviation Administration

Notice Before Waiver With Respect to Land at Raleigh County Memorial Airport, Beckley, WV

AGENCY: Federal Aviation Administration (FAA), DOT.

ACTION: Notice of intent of waiver with respect to land.

SUMMARY: The FAA is publishing notice of proposed release of 8.379 acres of land at the Raleigh County Memorial Airport, Beckley, West Virginia to the Raleigh County Airport Authority and the Raleigh County Commission for the development of an industrial park. There are no impacts to the Airport and the land is not needed for airport development as shown on the Airport Layout Plan. Fair Market Value of the land will be paid to the Raleigh County Airport and the Raleigh County Commission, and used for Airport purposes.

DATES: Comments must be received on or before January 7, 2005.

ADDRESSES: Comments on this application may be mailed or delivered in triplicate to the FAA at the following address: Connie Boley-Lilly, Program Specialist, Federal Aviation Administration, Beckley Airport District Office, 176 Airport Circle, Room 101, Beaver, West Virginia 25813.

In addition, one copy of any comments submitted to the FAA must be mailed or delivered to Thomas Cochran, Airport Manager, Raleigh County Memorial Airport at the following address: Thomas Cochran, Airport Manager, Raleigh County Memorial Airport, 176 Airport Circle, Room 105, Beaver, West Virginia 25813.

FOR FURTHER INFORMATION CONTACT: Connie Boley-Lilly, Program Specialist, Beckley Airport District Office, (304) 252–6216 ext. 125, FAX (304) 253–8028.

SUPPLEMENTARY INFORMATION: On April 5, 2000, new authorizing legislation became effective. That bill, the Wendell H. Ford Aviation investment and Reform Act for the 21st Century, Public Law 10–181 (April 5, 2000; 114 Stat. 61) (AIR 21) requires that a 30 day public notice must be provided before the Secretary may waive any condition imposed on an interest in surplus property.

Issued in Beckley, West Virginia on November 17, 2004.

Larry F. Clark,

Manager, Beckley Airport District Office, Eastern Region.

[FR Doc. 04–26980 Filed 12–7–04; 8:45 am]

BILLING CODE 4910–13–M

DEPARTMENT OF TRANSPORTATION

Federal Aviation Administration

Noise Compatibility Program Notice; Georgetown Municipal Airport, Georgetown, TX

AGENCY: Federal Aviation Administration, DOT.

ACTION: Notice.

SUMMARY: The Federal Aviation Administration (FAA) announces that it is reviewing a proposed noise compatibility program that was submitted for Georgetown Municipal Airport under the provisions of 49 U.S.C. 47501 *et seq.* (the Aviation Safety and Noise Abatement, hereinafter referred to as ''the Act'') and 14 CFR part 150 by the City of Georgetown. This program was submitted subsequent to a determination by FAA that associated noise exposure maps submitted under 14 CFR part 150 for the Georgetown Municipal Airport were in compliance with applicable requirements, effective January 26, 2004. The proposed noise compatibility program will be approved or disapproved on or before May 29, 2005.

EFFECTIVE DATES: The effective date of the start of FAA's review of the noise compatibility program is November 30, 2004. The public comment period ends January 29, 2005.

FOR FURTHER INFORMATION CONTACT: Mr. Paul Blackford, Environmental Specialist, Federal Aviation Administration, Texas Airports Development Office, ASW–650, 2601 Meacham Boulevard, Fort Worth, Texas 76193–0650. Telephone (817) 222–5607. Comments on the proposed noise compatibility program should also be submitted to the above office.

SUPPLEMENTARY INFORMATION: This notice announces that the FAA is reviewing a proposed noise compatibility program for Georgetown Municipal Airport, which will be approved or disapproved on or before May 29, 2005. This notice also announces the availability of this program for public review and comment.

An airport operator who has submitted noise exposure maps that are found by FAA to be in compliance with the requirements of Federal Aviation Regulations (FAR) part 150, promulgated pursuant to the Act, may submit a noise compatibility program for FAA approval which sets forth the measures the operator has taken or proposes to reduce existing non-compatible uses and prevent the introduction of additional non-compatible uses.

The FAA has formally received the noise compatibility program for Georgetown Municipal Airport, effective on November 29, 2004. The airport operator has requested that the FAA review this material and that the noise mitigation measures, to be implemented jointly by the airport and surrounding communities, be approved as a noise compatibility program under section 47504 of the Act. Preliminary review of the submitted material indicates that it conforms to FAR part 150 requirements for the submittal of noise compatibility programs, but that further review will be necessary prior to approval or disapproval of the program. The formal review period, limited by law to a maximum of 180 days, will be completed on or before May 29, 2005.

The FAA's detailed evaluation will be conducted under the provisions of 14 CFR part 150, section 150.33. The primary considerations in the evaluation process are whether the proposed measured may reduce the level of aviation safety or create an undue burden on interstate or foreign commerce, and whether they are reasonably consistent with obtaining the goal of reducing existing non-compatible land uses and preventing the introduction of additional non-compatible land uses.

Interested persons are invited to comment on the proposed program with specific reference to these factors. All comments relating to these factors, other than those properly addressed to local land use authorities, will be considered by the FAA to the extent practicable. Copies of the noise exposure maps and the proposed noise compatibility program are available for examination at the following locations:

Federal Aviation Administration, 2601 Meacham Boulevard, Fort Worth, Texas 76193–0650; City of Georgetown, P.O. Box 409, Georgetown, Texas 78627 Questions may be directed to the individual named above under the heading **FOR FURTHER INFORMATION CONTACT.**

Issued in Forth Worth, Texas, November 30, 2004.

Naomi L. Saunders,

Manager, Airports Division.

[FR Doc. 04–26850 Filed 12–7–04; 8:45 am]

BILLING CODE 4910–13–M

DEPARTMENT OF TRANSPORTATION

Federal Aviation Administration

Intent To Prepare an Environmental Impact Statement and Hold Scoping Meetings for a Replacement General Aviation Airport at Mesquite, NV

AGENCY: Federal Aviation Administration, DOT.

ACTION: Notice to hold one (1) public scoping meeting and one (1) Governmental/Public Agency scoping meeting.

SUMMARY: The Federal Aviation Administration (FAA) is issuing this notice to advise the public that an Environmental Impact Statement will be prepared for the proposed release of federal grant-in-aid obligations for the existing Mesquite Airport and development of a replacement general aviation airport for Mesquite, Nevada at another site. To ensure that all significant issues related to the proposed action are identified, one (1) public scoping meeting and one (1) governmental and public agency scoping meeting will be held.

FOR FURTHER INFORMATION CONTACT: Barry Franklin, Environmental Protection Specialist, San Francisco Airports District Office, Federal Aviation Administration, Western-Pacific Region, 831 Mitten Road, Burlingame, California, 94010; Telephone (650) 876–2778, extension 614. Comments on the scope of the EIS should be submitted to the address above and must be received no later than 5 p.m. Pacific Standard Time, February 20, 2005.

SUPPLEMENTARY INFORMATION: The Federal Aviation Administration (FAA) will prepare an Environmental Impact Stateament for proposed release of federal grant-in-aid obligations at the existing Mesquite Airport and development of a replacement general aviation airport. The need to prepare an Environmental Impact Statement (EIS) is based on the procedures described in FAA Order 5050.4A, *Airport Environmental Handbook,* information that indicates the site of the proposed replacement airport may contain desert tortoise (a federal listed species) and the proposed replacement airport development is likely to be controversial on environmental grounds.

The city of Mesquite, as owner and operator of Mesquite Airport, has determined I would like to use the existing airport site for another land use and proposes to construct a replacement general aviation airport on Mormon Mesa to continue to provide access to the national air transportation system. The proposed federal actions are to release the city from its federal grant-in-aid obligations at the existing airport and approve the Airport Layout Plan for the replacement airport. The existing Mesquite Airport was constructed in 1990. The city proposes to construct the replacement airport without the use of federal funds and transfer the existing grant-in-aid obligations in the replacement airport site. The land proposed for the replacement airport has been made available to the city of Mesquite through The Mesquite Lands Act of 1999, as amended. The Lead Agency for the preparation of the EIS is the Federal Aviation Administration. The FAA proposes to evalaute the following development alternatives and the No Action Alternative in the EIS as described below.

Alternative One: Construct Replacement General Aviation Airport at Mormon Mesa

- Redevelop the existing airport site for a non-aviation use.
- Acquisition of approximately 2622 acres of land to accommodate the proposed replacement airport, airport access road and Runway Protection Zones.
- Site preparation, grading and drainage for a replacement airport including a new runway not less than 5,100 feet long by 75–feet wide and associated parallel taxiway system and aircraft parking apron, access road and other associated facilities.
- Paving, lighting, and marking of the runway, taxiways, aircraft parking apron, access road.
- Installation of utilities necessary to operate the airport.
- Installation of navigational aids.
- Development of appropriate instrument flight procedures for the replacement airport.

Alternative Two: Construct the Replacement Airport in a Different Location

This alternative includes all the features of Alternative 1.

Alternative Three: Expand the Existing Airport

Under this alternative, the existing airport, constructed on top of a mesa, would be expanded to the fullest extent possible to accommodate continued general aviation aircraft operations.

Alternative Four: No action Alternative

Under the alternative the existing airport would be retained with no improvements. The city would not change the land use of the existing airport and a replacement airport would not be constructed.

Comments and suggestions are invited from Federal, State and local agencies, and other interested parties to ensure that the full range of issues related to these proposed projects are addressed and all significant issues are identified. Written comments and suggestions concerning the scope of the EIS may be mailed to the FAA informational contact listed above and must be received no later than 5 p.m. Pacific Standard Time, February 20, 2005.

Public Scoping Meeting: The FAA will hold one (1) public and one (1) governmental agency scoping meeting to solicit input from the public and various Federal, State and local agencies having jurisdiction by law or having specific expertise with respect to any environmental impacts associated with the proposed projects. The public scoping meeting will be held on Thursday, January 20, 2005, at the Mesquite City Hall, 10 East Mesquite Boulevard, Mesquite, Nevada 89027. The meeting will be held from 5 p.m. to 8 p.m. Pacific Standard Time (PST). A scoping meeting will be held specifically for governmental and public agencies the same day from 1 p.m. to 3 (PST) in the same location as the public scoping meeting.

Issued in Hawthorne, California, on December 1, 2004.

Mark A. McClardy,

Manager, Airports Division, Western—Pacific Region, AWP–600.

[FR Doc. 04–26981 Filed 12–7–04; 8:45 am]

BILLING CODE 4910–13–M

DEPARTMENT OF TRANSPORTATION

Federal Aviation Administration

[Summary Notice No. PE–2004–87]

Petitions for Exemption; Summary of Petitions Received

AGENCY: Federal Aviation Administration (FAA), DOT.

ACTION: Notice of petitions for exemption received.

SUMMARY: Pursuant to FAA's rulemaking provisions governing the application, processing, and disposition of petitions for exemption part 11 of Title 14, Code

of Federal Regulations (14 CFR), this notice contains a summary of certain petitions seeking relief from specified requirements of 14 CFR, dispositions of certain petitions previously received, and corrections. The purpose of this notice is to improve the public's awareness of, and participation in, this aspect of FAA's regulatory activities. Neither publication of this notice nor the inclusion or omission of information in the summary is intended to affect the legal status of any petition or its final disposition.

DATES: Comments on petitions received must identify the petition docket number involved and must be received on or before December 28, 2004.

ADDRESSES: You may submit comments [identified by DOT DMS Docket Number FAA–200X–XXXXX] by any of the following methods:

- Web Site: *http://dms.dot.gov.* Follow the instructions for submitting comments on the DOT electronic docket site.
- Fax: 1–202–493–2251.
- Mail: Docket Management Facility; U.S. Department of Transportation, 400 Seventh Street, SW., Nassif Building, Room PL–401, Washington, DC 20590–0001.
- Hand Delivery: Room PL–401 on the plaza level of the Nassif Building, 400 Seventh Street, SW., Washington, DC, between 9 a.m. and 5 p.m., Monday through Friday, except Federal holidays.
- Federal eRulemaking Portal: Go to *http://www.regulations.gov.* Follow the online instructions for submitting comments.

Docket: For access to the docket to read background documents or comments received, go to *http://dms.dot.gov* at any time or to Room PL–401 on the plaza level of the Nassif Building, 400 Seventh Street, SW., Washington, DC, between 9 a.m. and 5 p.m., Monday through Friday, except Federal holidays.

FOR FURTHER INFORMATION CONTACT: Tim Adams (202) 267–8033, Sandy Buchanan-Sumter (202) 267–7271, Office of Rulemaking (ARM–1), Federal Aviation Administration, 800 Independence Avenue, SW., Washington, DC 20591.

This notice is published pursuant to 14 CFR 11.85 and 11.91.

Issued in Washington, DC, on December 1, 2004.

Anthony F. Fazio,

Director, Office of Rulemaking.

Petitions for Exemption

Docket No.: FAA–2004–19623.

Petitioner: Kapowsin Air Sports, Ltd.

Section of 14 CFR Affected: 14 CFR 119.1(e)(6).

Description of Relief Sought: To allow Kapowsin Air Sports, Ltd., to conduct nonstop flights outside the 25-statute-mile radius of the airport of takeoff carrying persons for the purpose of conducting intentional parachute operations.

[FR Doc. 04–26867 Filed 12–7–04; 8:45 am]

BILLING CODE 4910–13–P

DEPARTMENT OF TRANSPORTATION

Federal Aviation Administration

[Summary Notice No. PE–2004–88]

Petitions for Exemption; Summary of Petitions Received

AGENCY: Federal Aviation Administration (FAA), DOT.

ACTION: Notice of petition for exemption received.

SUMMARY: Pursuant to FAA's rulemaking provisions governing the application, processing, and disposition of petitions for exemption, part 11 of Title 14, Code of Federal Regulations (14 CFR), this notice contains a summary of certain petitions seeking relief from specified requirements of 14 CFR. The purpose of this notice is to improve the public's awareness of, and participation in, this aspect of FAA's regulatory activities. Neither publication of this notice nor the inclusion or omission of information in the summary is intended to affect the legal status of any petition or its final disposition.

DATES: Comments on petitions received must identify the petition docket number involved and must be received on or before December 28, 2004.

ADDRESSES: You may submit comments identified by DOT DMS Docket Number FAA–2004–19520 by any of the following methods:

- *Web Site: http://dms.dot.gov.* Follow the instructions for submitting comments on the DOT electronic docket site.
- *Fax:* 1–202–493–2251.
- *Mail:* Docket Management Facility; U.S. Department of Transportation, 400 Seventh Street, SW., Nassif Building, Room PL–401, Washington, DC 20590–0001.
- *Hand Delivery:* Room PL–401 on the plaza level of the Nassif Building, 400 Seventh Street, SW., Washington, DC, between 9 a.m. and 5 p.m., Monday through Friday, except Federal holidays.
- *Federal eRulemaking Portal:* Go to *http://www.regulations.gov.* Follow the online instructions for submitting comments.

Docket: For access to the docket to read background documents or comments received, go to *http://dms.dot.gov* at any time or to Room PL–401 on the plaza level of the Nassif Building, 400 Seventh Street, SW., Washington, DC, between 9 a.m. and 5 p.m., Monday through Friday, except Federal holidays.

FOR FURTHER INFORMATION CONTACT: John Linsenmeyer (202) 267–5174 or Susan Lender (202) 267–8029, Office of Rulemaking (ARM–1), Federal Aviation Administration, 800 Independence Avenue, SW., Washington, DC 20591.

This notice is published pursuant to 14 CFR 11.85 and 11.91.

Issued in Washington, DC, on November 30, 2004.

Anthony F. Fazio,

Director, Office of Rulemaking.

Petitions for Exemption

Docket No.: FAA–2004–19520.

Petitioner: UNISON Industries.

Sections of 14 CFR Affected: 14 CFR 45.15(b).

Description of Relief Sought: To allow the petitioner to use a catalog to record Parts Manufacturer Approval (PMA) eligibility information for all aircraft parts produced by UNISON Industries, instead of using a tag for the eligibility information.

[FR Doc. 04–26868 Filed 12–7–04; 8:45 am]

BILLING CODE 4910–13–P

DEPARTMENT OF TRANSPORTATION

Federal Motor Carrier Safety Administration

[Docket Nos. FMCSA–98–3637, FMCSA–2000–7165, FMCSA–2000–7363, FMCSA–2000–8203, FMCSA–2002–12294]

Qualification of Drivers; Exemption Applications; Vision

AGENCY: Federal Motor Carrier Safety Administration (FMCSA), DOT.

ACTION: Notice of renewal of exemption; request for comments.

SUMMARY: This notice publishes the FMCSA decision to renew the exemptions from the vision requirement in the Federal Motor Carrier Safety Regulations for 12 individuals. The FMCSA has statutory authority to exempt individuals from vision standards if the exemptions granted will not compromise safety. The agency has concluded that granting these exemptions will provide a level of safety that will be equivalent to, or greater than, the level of safety maintained without the exemptions for these

commercial motor vehicle (CMV) drivers.

DATES: This decision is effective January 13, 2005. Comments from interested persons should be submitted by January 7, 2005.

ADDRESSES: You may submit comments identified by DOT DMS Docket Numbers FMCSA–98–3637, FMCSA–2000–7165, FMCSA–2000–7363, FMCSA–2000–8203, and FMCSA–2002–12294 by any of the following methods:

- Web Site: *http://dms.dot.gov.* Follow the instructions for submitting comments on the DOT electronic docket site.
- Fax: 1–202–493–2251.
- Mail: Docket Management Facility; U.S. Department of Transportation, 400 Seventh Street, SW., Nassif Building, Room PL–401, Washington, DC 20590–0001.
- Hand Delivery: Room PL–401 on the plaza level of the Nassif Building, 400 Seventh Street, SW., Washington, DC, between 9 am and 5 pm, Monday through Friday, except Federal Holidays.
- Federal eRulemaking Portal: Go to *http://www.regulations.gov.* Follow the on-line instructions for submitting comments.

Instructions: All submissions must include the agency name and docket numbers for this notice. For detailed instructions on submitting comments and additional information on the rulemaking process, see the Public Participation heading of the Supplementary Information section of this document. Note that all comments received will be posted without change to *http://dms.dot.gov,* including any personal information provided. Please see the Privacy Act heading under Regulatory Notices.

Docket: For access to the docket to read background documents or comments received, go to *http://dms.dot.gov* at any time or to Room PL–401 on the plaza level of the Nassif Building, 400 Seventh Street, SW., Washington, DC, between 9 a.m. and 5 p.m., Monday through Friday, except Federal Holidays.

FOR FURTHER INFORMATION CONTACT: Maggi Gunnels, Office of Bus and Truck Standards and Operations, (202) 366–4001, FMCSA, Department of Transportation, 400 Seventh Street, SW., Washington, DC 20590–0001. Office hours are from 8 a.m. to 5 p.m., e.t., Monday through Friday, except Federal holidays.

SUPPLEMENTARY INFORMATION:

Public Participation: The DMS is available 24 hours each day, 365 days each year. You can get electronic submission and retrieval help guidelines under the ''help'' section of the DMS web site. If you want us to notify you that we received your comments, please include a self-addressed, stamped envelope or postcard or print the acknowledgement page that appears after submitting comments on-line.

Privacy Act: Anyone is able to search the electronic form of all comments received into any of our dockets by the name of the individual submitting the comment (or signing the comment, if submitted on behalf of an association, business, labor union, *etc.*). You may review the Department of Transportation's complete Privacy Act Statement in the **Federal Register** published on April 11, 2000 (Volume 65, Number 70; Pages 19477–78) or you may visit *http://dms.dot.gov.*

Exemption Decision

Under 49 U.S.C. 31315 and 31136(e), the FMCSA may renew an exemption from the vision requirement in 49 CFR 391.41(b)(10), which applies to drivers of CMVs in interstate commerce, for a two year period if it finds ''such exemption would likely achieve a level of safety that is equivalent to, or greater than, the level that would be achieved absent such exemption.'' The procedures for requesting an exemption (including renewals) are set out in 49 CFR part 381. This notice addresses 12 individuals who have requested renewal of their exemptions in a timely manner. The FMCSA has evaluated these 12 applications for renewal on their merits and decided to extend each exemption for a renewable two year period. They are:

Robert R. Buis; George J. Ghigliotty; Robert J. Johnson; Charles R. Kuderer;

Thomas D. Laws; Michael L. Manning; Clifford C. Priesmeyer; Gerald R. Rietmann;

Arthur A. Sappington; William H. Smith; Denney V. Traylor; Edward C. Williams.

These exemptions are extended subject to the following conditions: (1) That each individual have a physical exam every year (a) by an ophthalmologist or optometrist who attests that the vision in the better eye continues to meet the standard in 49 CFR 391.41(b)(10), and (b) by a medical examiner who attests that the individual is otherwise physically qualified under 49 CFR 391.41; (2) that each individual provide a copy of the ophthalmologist's or optometrist's report to the medical examiner at the time of the annual medical examination; and (3) that each individual provide a copy of the annual medical certification to the employer for retention in the driver's qualification file and retain a copy of the certification on his/her person while driving for presentation to a duly authorized Federal, State, or local enforcement official. Each exemption will be valid for two years unless rescinded earlier by the FMCSA. The exemption will be rescinded if: (1) The person fails to comply with the terms and conditions of the exemption; (2) the exemption has resulted in a lower level of safety than was maintained before it was granted; or (3) continuation of the exemption would not be consistent with the goals and objectives of 49 U.S.C. 31315 and 31136(e).

Basis for Renewing Exemptions

Under 49 U.S.C. 31315(b)(1), an exemption may be granted for no longer than two years from its approval date and may be renewed upon application for additional two year periods. In accordance with 49 U.S.C. 31315 and 31136(e), each of the 12 applicants has satisfied the entry conditions for obtaining an exemption from the vision requirements (63 FR 30285, 63 FR 54519, 65 FR 33406, 65 FR 45817, 65 FR 57234, 65 FR 66293, 65 FR 77066, 67 FR 46016, 67 FR 57266, 67 FR 57267, 67 FR 71610, 68 FR 1654). Each of these 12 applicants has requested timely renewal of the exemption and has submitted evidence showing that the vision in the better eye continues to meet the standard specified at 49 CFR 391.41(b)(10) and that the vision impairment is stable. In addition, a review of each record of safety while driving with the respective vision deficiencies over the past two years indicates each applicant continues to meet the vision exemption standards. These factors provide an adequate basis for predicting each driver's ability to continue to drive safely in interstate commerce. Therefore, the FMCSA concludes that extending the exemption for each renewal applicant for a period of two years is likely to achieve a level of safety equal to that existing without the exemption.

Comments

The FMCSA will review comments received at any time concerning a particular driver's safety record and determine if the continuation of the exemption is consistent with the requirements at 49 U.S.C. 31315 and 31136(e). However, the FMCSA requests that interested parties with specific data concerning the safety records of these drivers submit comments by January 7, 2005.

In the past the FMCSA has received comments from Advocates for Highway

and Auto Safety (Advocates) expressing continued opposition to the FMCSA's procedures for renewing exemptions from the vision requirement in 49 CFR 391.41(b)(10). Specifically, Advocates objects to the agency's extension of the exemptions without any opportunity for public comment prior to the decision to renew, and reliance on a summary statement of evidence to make its decision to extend the exemption of each driver.

The issues raised by Advocates were addressed at length in 69 FR 51346 (August 18, 2004). The FMCSA continues to find its exemption process appropriate to the statutory and regulatory requirements.

Issued on: December 2, 2004.

Rose A. McMurray,

Associate Administrator, Policy and Program Development.

[FR Doc. 04–26982 Filed 12–7–04; 8:45 am]

BILLING CODE 4910–EX–P

DEPARTMENT OF TRANSPORTATION

Federal Motor Carrier Safety Administration

[Docket No. FMCSA–2002–12844]

Qualification of Drivers; Exemption Applications; Vision

AGENCY: Federal Motor Carrier Safety Administration (FMCSA), DOT.

ACTION: Notice of renewal of exemption; request for comments.

SUMMARY: This notice publishes the FMCSA decision to renew the exemptions from the vision requirement in the Federal Motor Carrier Safety Regulations for 22 individuals. The FMCSA has statutory authority to exempt individuals from vision standards if the exemptions granted will not compromise safety. The agency has concluded that granting these exemptions will provide a level of safety that will be equivalent to, or greater than, the level of safety maintained without the exemptions for these commercial motor vehicle (CMV) drivers.

DATES: This decision is effective January 17, 2005. Comments from interested persons should be submitted by January 7, 2005.

ADDRESSES: You may submit comments identified by DOT DMS Docket Number FMCSA–2002–12844 by any of the following methods:

- Web Site: *http://dms.dot.gov.* Follow the instructions for submitting comments on the DOT electronic docket site.
- Fax: 1–202–493–2251.
- Mail: Docket Management Facility; U.S. Department of Transportation, 400 Seventh Street, SW., Nassif Building, Room PL–401, Washington, DC 20590–0001.
- Hand Delivery: Room PL–401 on the plaza level of the Nassif Building, 400 Seventh Street, SW., Washington, DC, between 9 a.m. and 5 p.m., Monday through Friday, except Federal holidays.
- Federal eRulemaking Portal: Go to *http://www.regulations.gov.* Follow the on-line instructions for submitting comments.

Instructions: All submissions must include the agency name and docket numbers for this notice. For detailed instructions on submitting comments and additional information on the rulemaking process, see the Public Participation heading of the **SUPPLEMENTARY INFORMATION** section of this document. Note that all comments received will be posted without change to *http://dms.dot.gov,* including any personal information provided. Please see the Privacy Act heading under Regulatory Notices.

Docket: For access to the docket to read background documents or comments received, go to *http://dms.dot.gov* at any time or to Room PL–401 on the plaza level of the Nassif Building, 400 Seventh Street, SW., Washington, DC, between 9 a.m. and 5 p.m., Monday through Friday, except Federal holidays.

FOR FURTHER INFORMATION CONTACT: Maggi Gunnels, Office of Bus and Truck Standards and Operations, (202) 366–4001, FMCSA, Department of Transportation, 400 Seventh Street, SW., Washington, DC 20590–0001. Office hours are from 8 a.m. to 5 p.m., e.t., Monday through Friday, except Federal holidays.

SUPPLEMENTARY INFORMATION: *Public Participation:* The DMS is available 24 hours each day, 365 days each year. You can get electronic submission and retrieval help guidelines under the ''help'' section of the DMS Web site. If you want us to notify you that we received your comments, please include a self-addressed, stamped envelope or postcard or print the acknowledgement page that appears after submitting comments on-line.

Privacy Act: Anyone is able to search the electronic form of all comments received into any of our dockets by the name of the individual submitting the comment (or signing the comment, if submitted on behalf of an association, business, labor union, etc.). You may review the Department of Transportation's complete Privacy Act Statement in the **Federal Register** published on April 11, 2000 (Volume 65, Number 70; Pages 19477–78) or you may visit *http://dms.dot.gov.*

Exemption Decision

Under 49 U.S.C. 31315 and 31136(e), the FMCSA may renew an exemption from the vision requirement in 49 CFR 391.41(b)(10), which applies to drivers of CMVs in interstate commerce, for a two year period if it finds ''such exemption would likely achieve a level of safety that is equivalent to, or greater than, the level that would be achieved absent such exemption.'' The procedures for requesting an exemption (including renewals) are set out in 49 CFR part 381. This notice addresses 22 individuals who have requested renewal of their exemptions in a timely manner. The FMCSA has evaluated these 22 applications for renewal on their merits and decided to extend each exemption for a renewable two year period. They are:

Thomas J. Boss, Howard F. Breitkreutz, Ryan J. Christensen, William T. Cummins, John E. Evenson, Leon Frieri, Steven C. Humke; Leon E. Jackson, Neil W. Jennings, Craig M. Landry, Earl E. Louk, William R. Mayfield, Richard E. Nordhausen, Jr., Tony E. Parks, Andrew H. Rusk; Henry A. Shelton, Richard L. Sheppard, Deborah A. Sigle, Richard A. Stevens, Kenneth E. Vigue, Jr., David G. Williams, Richard A. Winslow.

These exemptions are extended subject to the following conditions: (1) That each individual have a physical exam every year (a) by an ophthalmologist or optometrist who attests that the vision in the better eye continues to meet the standard in 49 CFR 391.41(b)(10), and (b) by a medical examiner who attests that the individual is otherwise physically qualified under 49 CFR 391.41; (2) that each individual provide a copy of the ophthalmologist's or optometrist's report to the medical examiner at the time of the annual medical examination; and (3) that each individual provide a copy of the annual medical certification to the employer for retention in the driver's qualification file and retain a copy of the certification on his/her person while driving for presentation to a duly authorized Federal, State, or local enforcement official. Each exemption will be valid for two years unless rescinded earlier by the FMCSA. The exemption will be rescinded if: (1) The person fails to comply with the terms and conditions of the exemption; (2) the exemption has resulted in a lower level of safety than was maintained before it was granted; or (3) continuation of the exemption would

not be consistent with the goals and objectives of 49 U.S.C. 31315 and 31136(e).

Basis for Renewing Exemptions

Under 49 U.S.C. 31315(b)(1), an exemption may be granted for no longer than two years from its approval date and may be renewed upon application for additional two year periods. In accordance with 49 U.S.C. 31315 and 31136(e), each of the 22 applicants has satisfied the entry conditions for obtaining an exemption from the vision requirements (67 FR 68719 and 68 FR 2629). Each of these 22 applicants has requested timely renewal of the exemption and has submitted evidence showing that the vision in the better eye continues to meet the standard specified at 49 CFR 391.41(b)(10) and that the vision impairment is stable. In addition, a review of each record of safety while driving with the respective vision deficiencies over the past two years indicates each applicant continues to meet the vision exemption standards. These factors provide an adequate basis for predicting each driver's ability to continue to drive safely in interstate commerce. Therefore, the FMCSA concludes that extending the exemption for each renewal applicant for a period of two years is likely to achieve a level of safety equal to that existing without the exemption.

Comments

The FMCSA will review comments received at any time concerning a particular driver's safety record and determine if the continuation of the exemption is consistent with the requirements at 49 U.S.C. 31315 and 31136(e). However, the FMCSA requests that interested parties with specific data concerning the safety records of these drivers submit comments by January 7, 2005.

In the past the FMCSA has received comments from Advocates for Highway and Auto Safety (Advocates) expressing continued opposition to the FMCSA's procedures for renewing exemptions from the vision requirement in 49 CFR 391.41(b)(10). Specifically, Advocates objects to the agency's extension of the exemptions without any opportunity for public comment prior to the decision to renew, and reliance on a summary statement of evidence to make its decision to extend the exemption of each driver.

The issues raised by Advocates were addressed at length in 69 FR 51346 (August 18, 2004). The FMCSA continues to find its exemption process appropriate to the statutory and regulatory requirements.

Issued on: December 3, 2004.

Rose A. McMurray,

Associate Administrator, Policy and Program Development.

[FR Doc. 04–26983 Filed 12–7–04; 8:45 am]

BILLING CODE 4910–EX–P

DEPARTMENT OF TRANSPORTATION

National Highway Traffic Safety Administration

Discretionary Cooperative Agreements for Research Under the Crash Injury Research and Engineering Network (CIREN)

AGENCY: National Highway Traffic Safety Administration (NHTSA), DOT.

ACTION: Announcement of discretionary cooperative agreements to support the research conducted under the Crash Injury Research and Engineering Network (CIREN) and to increase its benefits to the public.

SUMMARY: The National Highway Traffic Safety Administration (NHTSA) announces discretionary Cooperative Agreement opportunities to provide funding to Level One Trauma Centers in support of the Crash Injury Research and Engineering Network (CIREN). NHTSA anticipates funding these Cooperative Agreements in annual installments for one base year plus 4 one-year option years at NHTSA's option and subject to available funding. Due to budgetary constraints and the levels of effort applicants may propose, NHTSA is uncertain as to the number of Cooperative Agreements that will be funded. However, multiple awards will be made under this announcement. These cooperative agreements will support projects to improve the prevention, treatment, and rehabilitation of motor vehicle crash injuries to reduce deaths, disabilities and human and economic costs. This **Federal Register** Notice solicits applications from Level One Trauma Centers. Interested applicants must follow the instructions in the application section of this **Federal Register** Notice. NHTSA will review the applications to determine which proposals will receive funding under this announcement.

DATES: Applications must be submitted to the National Highway Traffic Safety Administration, Office of Contracts and Procurement (NPO–220), Attention: Dianne Proctor, 400 Seventh Street, SW., Room 5301, Washington, DC 20590. All applications submitted must include a reference to NHTSA Cooperative Agreement Program Number DTNH22–05–H–01001. Only complete packages received on or before 2 p.m. e.s.t. on February 8, 2005, will be considered for award.

Applicants shall provide a complete mailing address where Federal Express mail can be delivered.

FOR FURTHER INFORMATION CONTACT: General administrative and programmatic questions may be directed to Dianne Proctor, Office of Contracts and Procurement, by e-mail at *Diane.Proctor@nhtsa.dot.gov* or by phone at (202) 366–9562 and Karin E. Eddy, Office of Contracts and Procurement, by e-mail at *Karin.Eddy@nhtsa.dot.gov* or by phone at (202) 366–9568. To allow for sufficient time to address questions appropriately, all questions must be submitted in writing no later 2 p.m. e.s.t., December 20, 2004, via e-mail to *Karin.Eddy@nhtsa.dot.gov*. Response to the questions will be posted on *http://www-nrd.nhtsa.dot.gov/departments/nrd-50/ciren/CIREN.html* by January 10, 2005 and in the **Federal Register**.

Any changes to this date will be posted on the Web site. Interested applicants are advised that no separate application package exists beyond the contents of this announcement.

SUPPLEMENTARY INFORMATION:

I. Background

Motor vehicles are the dominant means of travel in the United States for both personal and business trips and provide Americans with an extraordinary degree of mobility. Traffic fatalities account for more than 90% of all transportation-related fatalities. These injuries and fatalities are a major public health problem. More than 40,000 people die each year as the result of injuries received in motor vehicle crashes and more than 3 million people are injured. Motor vehicle injuries comprise nearly half of all traumatic injury deaths.

The large number of motor vehicle injuries places a considerable burden on the nation's health care system. It is estimated that about 20 percent of all Emergency Medical Service (EMS) calls are motor vehicle related, and persons are treated in trauma centers largely as the result of motor vehicle crashes. This care results in a significant economic burden on society, estimated at more than $17 billion a year. Because motor vehicle injuries often have long-term effects, they are a leading cause of long-term disability.

NHTSA is an agency of the U.S. Department of Transportation (DOT). NHTSA's mission is to save lives, prevent injuries and reduce traffic-

related health care and other economic costs. The agency develops, promotes and implements effective educational, engineering and enforcement programs with the goal of ending preventable tragedies and reducing economic costs associated with vehicle use and highway travel.

As part of its mandate, NHTSA conducts research to improve motor vehicle and traffic safety, diagnose specific problems, implement standards and programs to address these problems and evaluate their impact.

NHTSA has funded hospital-related studies since the 1980s. In 1991, NHTSA initiated the Highway Traffic Injuries Studies. Over the next several years, research projects were funded at four Level One Trauma Centers to collect detailed injury information on motor vehicle occupants involved in crashes. The four centers were: The National Study Center for Trauma and EMS/R Adams Cowley Shock Trauma Center in Baltimore, Maryland; the University of Medicine & Dentistry/New Jersey Medical School in Newark, New Jersey; the Children's National Medical Center in Washington, DC; and the William Lehman Injury Research Center/University of Miami School of Medicine/Ryder Trauma Center in Miami, Florida.

In the summer of 1996, as part of a settlement agreement with the Department of Transportation, General Motors funded three additional Level One Trauma Centers. These centers are: The University of Michigan Medical Center in Ann Arbor, Michigan; Harborview Injury Prevention & Research Center in Seattle, Washington; and San Diego County Trauma System in San Diego, California. The addition of these three centers, along with the need for a uniform method to collect data, resulted in the formation of the Crash Injury Research and Engineering Network (CIREN).

In April 1999, Mercedes-Benz announced the funding of an eighth trauma center-based research project at the University of Alabama at Birmingham. Funding for that Center ended in April 2004. In May 2000, Ford Motor Company announced the funding of a ninth trauma center-based research project at Inova Fairfax Hospital in Falls Church, Virginia. In September 2002, Honda assumed funding of the CIREN Center at Inova Fairfax Hospital. In November 2001, Froedtert Hospital and the Medical College of Wisconsin self-funded a tenth CIREN center at its facility.

CIREN is a sponsor-led multi-center research program involving a collaboration of clinicians and engineers in academia, industry, and government pursuing in-depth studies of crashes, injuries, and treatments to improve processes and outcomes. Its mission is to improve the prevention, treatment, and rehabilitation of motor vehicle crash injuries to reduce deaths, disabilities, and human and economic costs.

CIREN is also the name of a research tool developed, updated, enhanced and maintained by the Volpe National Transportation Systems Center (Volpe) in Cambridge, Massachusetts to help researchers collect and review injury data. Variables for CIREN crash reconstruction data are an extension of the National Automotive Sampling System (NASS) Oracle data model. Variables for the medical injury data are based on a variety of sources including the National Trauma Registry, the Orthopedic Trauma Association, and the Uniform Pre-Hospital EMS Data Elements. Support for the seven (7) currently federally-funded CIREN Centers ends on March 31, 2005.

II. Objective

The objective of the Cooperative Agreements is to fund CIREN Centers to add to the scope of data and expertise available and to increase CIREN's benefits to the public. NHTSA intends to award up to ten (10) Cooperative Agreements (depending on available funding at the time of award and the levels of effort proposed by the applicants) to support the goals of this initiative. Each Cooperative Agreement recipient will be expected to identify and coordinate an effort that supports the goals outlined in CIREN System Requirements. (*See* Section XIII).

III. NHTSA Involvement

NHTSA will be involved in all activities undertaken as part of the Cooperative Agreement program and will, for each Cooperative Agreement awarded:

1. Provide a NHTSA Contracting Officer's Technical Representative (COTR) to participate in the planning and management of the Cooperative Agreement and to coordinate activities between the Grantee (*i.e.*, award recipients of the resultant Cooperative Agreement) and NHTSA.

2. Provide information and technical assistance from government sources within available resources as determined appropriate by the COTR and the NHTSA CIREN Program Manager.

3. Review and provide comments on oral and written presentations, research notes, white papers and other material submitted for publication to medical, technical or scientific journals.

4. Stimulate the exchange of information among Grantees and encourage research projects.

IV. Levels of Effort

Applicants may be considered for any one (1) of three (3) possible levels of effort.

Level 1—The Grantee CIREN Center shall prepare fifty (50) cases each year. In addition, the Grantee CIREN Center must prepare and submit to peer review publications three (3) papers related to NHTSA/CIREN goals. One (1) paper must be submitted to a medically oriented automotive safety conference peer review publication and must use CIREN data. The second and third papers must be submitted to additional peer review publications. At least one (1) of these additional papers must use CIREN data. Papers should incorporate CIREN Center experience. The principal investigator or co-principal investigator is required to present research findings at all public meetings and grand rounds, with supporting staff in attendance as needed. CIREN project/data coordinator(s), crash investigator(s) and supporting staff, as appropriate, are required to attend all team meetings. The Grantee CIREN Center shall conduct outreach programs in its community. Target audiences shall include first responders (EMS, fire and law enforcement agencies), medical counterparts, and the general public.

Level 2—The Grantee CIREN Center shall prepare forty (40) cases each year. In addition, the Grantee CIREN Center must prepare and submit to peer review publications two (2) papers related to NHTSA/CIREN goals. One (1) paper must be submitted to a medically oriented automotive safety conference peer review publication and a second paper must be submitted to an additional peer review publication. Both papers must use CIREN data. Papers should incorporate CIREN Center experience. The principal investigator or co-principal investigator is required to present research findings at all public meetings and grand rounds, with supporting staff in attendance as needed. The Grantee CIREN Center may, with the prior written approval of the COTR or NHTSA CIREN Program Manager, elect not to attend one (1) of these meetings per year. CIREN project/data coordinator(s), crash investigator(s) and supporting staff, as appropriate, are required to attend all team meetings. The Grantee CIREN Center shall conduct outreach programs in its community. Target audiences shall include first responders (EMS, fire and

law enforcement agencies), medical counterparts, and the general public.

Level 3—The Grantee CIREN Center shall prepare thirty (30) cases each year. In addition, the Grantee CIREN Center must prepare and submit to peer review publications one (1) paper related to NHTSA/CIREN goals. The Paper must use CIREN data, and should incorporate CIREN Center experience. The principal investigator or co-principal investigator is required to present research findings at all public meetings and grand rounds, with supporting staff in attendance as needed. The Grantee CIREN Center may, with the prior written approval of the COTR or NHTSA CIREN Program Manager, elect not to attend one (1) of these meetings per year. CIREN project/data coordinator(s), crash investigator(s) and supporting staff, as appropriate, are required to attend all team meetings. The Grantee CIREN Center shall conduct outreach programs in its community. Target audiences shall include first responders (EMS, fire and law enforcement agencies), medical counterparts, and the general public.

V. Funding

1. General

Subject to the availability of funds, it is anticipated that NHTSA will award up to ten (10) Cooperative Agreements to support the goals of this initiative for a period of five (5) years (*i.e.*, one base year and four one-year Option Years, if exercised). Each Grantee will be expected to coordinate an effort that supports the goals outlined in the CIREN System Requirements.

NHTSA anticipates that approximately three million dollars ($3,000,000.00) in total federal funding will be available for award of up to ten (10) Cooperative Agreements under this **Federal Register** Notice for the base year. Funding for each of the four (4) option years for each of the Grantees will be based on the availability of funds in future fiscal years.

The total number of awards will depend on the number and quality of the proposals submitted and the funding available at the time of the award. Applicants are encouraged to submit applications for all levels of effort for which they wish to be considered. However, no applicant may receive an award for more than one level of effort. NHTSA will select from among the proposals received from the prospective CIREN Center(s) to obtain the best mix of price/performance for the program as a whole.

2. Potential Funding Level Adjustments

As outlined below, initial funding levels set at the time of award shall be adjusted if production levels are not achieved during the period of performance. Each Grantee's performance will be evaluated formally at the end of the second, third and fourth quarters in each performance period (including base and option years) to verify that the Grantee has reached the production levels specified in Appendix 3, Annual CIREN Work Production Levels. (Note that these production levels apply to medical/crash cases and peer-reviewed papers.) The reviews are as follows:

a. Second Quarter Review

A Grantee whose performance falls below any of the production levels outlined in Appendix 3 at the time of the second quarter review will be informed by the NHTSA Contracting Officer in writing that its performance is in jeopardy and that funding will be reduced to reflect the actual level of performance if production levels are not met by the end of the third quarter. The NHTSA Contracting Officer in consultation with the NHTSA COTR will make this determination.

b. Third Quarter Review

A Grantee whose performance falls below any of the production levels outlined in Appendix 3 at the time of the third quarter review will be funded on a pro rata basis reflecting the actual level of performance. For example, Centers that do not meet their production levels as stated in Appendix 3 will have a pro rata amount deducted from their annual award. The pro rata amount will be based on the number of production units not achieved during that year. Production units are weighted as follows—one crash case equals one production unit and one peer reviewed research paper equals two production units (*e.g.*, a Level 1 Grantee enrolling 50 medical/crash cases and 3 peer-reviewed papers will have completed 56 production units).

c. Fourth Quarter Review (Final Performance Evaluation)

A Grantee whose performance meets all production levels at the end of the performance period will receive all agreed upon funding.

A Grantee whose performance falls below any of the production levels outlined in Appendix 3 at the end of the period of performance will be funded on a pro rata basis reflecting the actual level of performance.

3. Option Year Funding

a. Eligibility for Full Funding

A Grantee whose performance meets all production levels by the end of the performance period will be eligible for funding at the same level of performance in the subsequent option year (if this option is exercised).

b. Eligibility for Reduced Funding

Upon notification made by the NHTSA COTR, failure of a Grantee to meet any of the production levels outlined in Appendix 3, Annual CIREN Work Production Deliverables by the end of the then-current performance period will result in the following action taken by the NHTSA Contracting Officer:

(1) The Grantee will be eligible for funding in the subsequent option year only at a lower level (*e.g.*, a Level 1 Grantee who fails to meet the production levels will be considered only for Level 2 or Level 3 in the subsequent option year; a Level 2 Grantee who fails to meet the production levels will be considered only for Level 3 in the subsequent option year);

(2) During a year of reduced funding, the specified level of reduced funding will constitute the maximum available to the Grantee in that year, regardless of whether the Grantee's performance improves (*e.g.*, a Level 1 Grantee who receives reduced funding as a Level 2 Grantee in an option year cannot receive more than the Level 2 amount of funding in the year of reduced funding, despite exceeding the production levels for Level 2); and

(3) If the Grantee's performance improves in a year of reduced funding, the Grantee's funding may be restored to a higher level of funding in a subsequent Option Year at NHTSA's discretion and subject to the availability of funds.

A Grantee funded at Level 3 in any year that fails to meet any of the production levels specified in Appendix 3 at the end of the fourth quarter will be terminated from the CIREN program.

c. NHTSA's Option

Notwithstanding paragraphs 3(a) and 3(b) above, the exercise of an option is in NHTSA's sole discretion. (*See* Section VII).

4. Miscellaneous Funding Conditions or Limitations

Notwithstanding any other provision of this **Federal Register** Notice, to ensure that production levels are met, the Government will monitor performance at all times and reserves

the right to adjust levels of reimbursement at any time if performance or progress is deemed inadequate.

To ensure that reimbursement is commensurate with performance during the performance period, a Grantee shall not be reimbursed for more than the greater of the pro rata funding amount for medical/crash cases and peer-reviewed papers completed or 25% of its total funding per quarter.

Notwithstanding any other provision of this **Federal Register** Notice, the Government may elect to waive the requirement for submission of one or more peer-reviewed paper(s) in exchange for the Grantee's participation in special research programs, as outlined in Section 3(E) under Specific Work Requirements. The NHTSA Contracting Officer shall detail any such waiver in writing. Unless the Government elects to waive a requirement for submission of peer-reviewed papers, the production levels for submission of such papers are firm.

VI. Period of Performance

The anticipated period of performance for any Cooperative Agreement awarded under this **Federal Register** Notice begins April 1, 2005 and ends March 31, 2006 for the base period. Each of the four (4) twelve (12) month option years will begin on April 1 and end on March 31 of the then exercised Option Year.

VII. Option Exercise

The Government reserves the right to exercise up to (4) four-twelve (12) month Option Years. The total of the Base Year and Option Years (if exercised) shall not exceed five consecutive calendar years. The Government may extend the terms of this agreement by written notice to the Grantee approximately sixty (60) calendar days prior to expiration of the then-current option year. The exercise of an Option Period will be considered achieved upon the execution of a unilateral modification to the Cooperative Agreement.

VIII. Termination

Notwithstanding any other provision of the agreement, upon ninety (90) days advance written notice by the NHTSA Contracting Officer, the performance under the Cooperative Agreement may be terminated in the event that the prescribed funds are not available or the performance of the effort does not produce the intended result.

IX. Eligibility Requirements

The Applicant's principal or co-principal must be a clinically active emergency room trauma physician or a clinically active emergency medical physician or a clinically active specialist with experience relating to the diagnosis and treatment of motor vehicle injuries and must be closely affiliated with a Level One Trauma Center. The Applicant also must be affiliated with the engineering or biomechanics programs at a university to assist with the work that will be performed by the Center. The Applicant must receive a sufficient number of motor vehicle crash victims from which cases may be selected for the CIREN program.

Interested applicants are advised that no fee or profit will be allowed under this Cooperative Agreement program.

Applicants are encouraged to submit proposals that address all three (3) performance levels as outlined under Section IV Levels of Effort. However, applicants at their discretion may address less than three.

Applicant shall not submit a proposal jointly with another trauma center.

X. Conflict of Interest

It is the Department of Transportation's (DOT) policy to award cooperative agreements to only those applicants whose objectivity is not impaired because of any related past, present, or planned interest, financial or otherwise, in organizations regulated by DOT or in organizations whose interests may be affected substantially by Departmental activities. Based on this policy:

(a) The applicant shall provide a statement in its proposal which describes in a concise manner all past, present or planned organizational, financial, contractual or other interest(s) with an organization regulated by DOT, or with an organization whose interests may be affected substantially by Departmental activities, and which is related to the work under this **Federal Register** Notice. The interest(s) described shall include those of the proposer, its affiliates, proposed consultants, proposed subcontractors and key personnel of any of the above. Past interest shall be limited to within one year of the date of the applicant's technical proposal. Key personnel shall include any person owning more than 20% interest in the applicant, and the applicant's corporate officers, its senior managers and any employee who is responsible for making a decision or taking an action under this Cooperative Agreement where the decision or action can have an economic or other impact on the interests of a regulated or affected organization.

(b) The applicant shall describe in detail why it believes, in light of the interest(s) identified in (a) above, that performance of the proposed contract can be accomplished in an impartial and objective manner.

(c) In the absence of any relevant interest identified in (a) above, the applicant shall submit in its proposal a statement certifying that to its best knowledge and belief no affiliation exists relevant to possible conflicts of interest. The applicant must obtain the same information from potential subcontractors prior to award of a subcontract under the resultant Cooperative Agreement.

(d) The NHTSA Contracting Officer will review the statement submitted and may require additional relevant information from the applicant. All such information, and any other relevant information known to DOT, will be used to determine whether an award to the applicant may create a conflict of interest. If any such conflict of interest is found to exist, the NHTSA Contracting Officer may (1) disqualify the applicant, or (2) determine that it is otherwise in the best interest of the agency to contract with the applicant and include appropriate provisions to mitigate or avoid such conflict in the Cooperative Agreement awarded.

(e) The refusal to provide the disclosure or representation, or any additional information required, may result in disqualification of the applicant for award. If nondisclosure or misrepresentation is discovered after award, the resulting Cooperative Agreement may be terminated. If after award, the Grantee discovers a conflict of interest with respect to the Cooperative Agreement awarded as a result of this **Federal Register** Notice, which could not reasonably have been known prior to award, an immediate and full disclosure shall be made in writing to the NHTSA Contracting Officer. The disclosure shall include a full description of the conflict, a description of the action the Grantee has taken, or proposes to take, to avoid or mitigate such conflict. The NHTSA Contracting Officer may, however, terminate the Cooperative Agreement for convenience if he or she deems that termination is in the best interest of the Government.

XI. Application Procedure

Each Applicant shall submit one (1) original and five (5) copies of the application package via Federal Express to: DOT/NHTSA, Office of Contracts

and Procurement (NPO–220), 400 Seventh Street, SW., Room 5301, Washington, DC 20590, Attention: Dianne R. Proctor. Applications shall be single spaced, must be typed on one side of the page only, must not exceed 50 typed written single spaced pages and must include a reference to Cooperative Agreement Number DTNH22–05–H–01001. Appendices, which may be included, are not counted in the 50-page limit.

Only complete packages received on or before 2 p.m. e.s.t. on February 8, 2005, will be considered. No facsimile transmissions will be accepted. Applications must contain a reference to NHTSA Cooperative Agreement Number DTNH22–05-H–01001. Unnecessarily elaborate applications beyond what is sufficient to present a complete and effective response to this **Federal Register** Notice must not be submitted.

XII. Application Contents

1. The application package must be submitted with the Office of Management and Budget (OMB) Standard Form 424 (Rev 4–88, including 424A and 424B), Application for Federal Assistance, including 424A, Budget Information-Non-construction Program and 424B, Assurances-Non-construction Programs, with the required information provided and the certified assurances included. A Standard Form 424A & 424B must be submitted and packaged separately for each level of effort for which the applicant wishes to be considered. (*See* Section IV.)

Forms are electronically available for downloading at *http://www.whitehouse.gov/omb/grants/index.html.*

While the Form 424A deals with budget information, and Section B identifies Budget Categories, the available space does not permit a level of detail that is sufficient to provide for a meaningful evaluation of proposed costs. Therefore, supplemental information must be provided which presents a detailed breakout of the proposed costs (detailed labor, including labor category, level of effort and rate; direct materials, including itemized equipment, travel and transportation, including projected trips and number of people traveling; subcontracts/subgrants with similar detail if known; and overhead) as well as any In-Kind contributions the Applicant proposes to contribute.

The Applicant also shall provide documentation supporting all costs for which federal funding is being requested. The estimated costs must be separated and proposed by base year and by each of the four (4) one year option years, such that the applicants budget will reflect the total possible performance of five (5) years. For each performance level of effort, (*i.e.,* 50 cases, 40 cases and 30 cases) for which the applicant wishes to be considered, applicants must provide separate budgets proposed by base year and by each of the four (4) one year option years, such that the applicants budget will reflect the total possible performance of five (5) years.

For the Base Year only, the applicant's proposal must include $10,000.00 for Government Furnished Equipment, as described under Section XIII, Subsection 6. Specifically, the applicant's cost proposal must indicate, as a separate line item, for the Base Year only, $10,000.00 for Government Furnished Equipment under each performance level being proposed. For example,

Total Proposal Cost $10,000.00,
Equipment Cost $10,000.00,
Grand Total Proposed $20,000.00

2. *Program Narrative Statement:* Applicants shall fully describe the work to be performed under the Cooperative Agreement. Applications must include the following information in the program narrative statement:

(A) A table of contents including page number references.

(B) *Work Plan, Technical Approach, and Technical Capability and Understanding:* A description of the goal(s) of the project/program and how the applicant plans to meet the goal(s), including specific methodologies for the completion of tasks associated with the initiating, tracking and submission of enrolled medical/crash cases. The Applicant shall include steps that will be used to enroll medical/crash cases and perform in-house quality control of enrolled cases prior to submission to NHTSA's quality assurance contractor. The Applicant shall discuss technical problems, barriers and/or critical issues related to the successful completion of this Cooperative Agreement effort. This must be specific with respect to each level of effort for which the Applicant wishes to be considered. To facilitate evaluation of the Applicant's Technical Capability and Understanding, the proposal should include information explaining how the Applicant meets the following:

(1) Understanding of the methodology used in an electronic data collection system for medical/crash case assignment, medical/crash case tracking, and consistency of data coding, quality control and timeliness of medical/crash case submissions;

(2) Understanding of trauma system injury coding [Abbreviated Injury Scale (AIS), International Classification of Diseases Modifications (ICDM), Orthopaedic Trauma Assessment (OTA), Current Procedural Terminology (CPT)];

(3) Ability to communicate effectively the results of research efforts in publications and to conduct effectively outreach activities to the community at large;

(4) Understanding of all available clinical data systems on site.

(C) *Trauma Registry Data:* The Applicant's affiliated Level One Trauma Center's trauma registry data for the last three (3) years and the number of motor vehicle crash occupants admitted to the trauma center. For each year, if available, the Applicant shall identify the maximum level of severity (AIS1–AIS6) for the injuries incurred by each admitted occupant.

(D) *Radiology Systems:* A description of current radiology systems utilized and methods (digital or film) used to obtain radiological images for presentation and research. Describe technology available [Computed Tomography (CT), Magnetic Resonance Image (MRI), High Speed CT, etc.].

(E) *Patient Data Systems:* A description of patient data systems utilized at Applicant's facility (100% electronic medical records versus hard copy paper medical records or a hybrid system) and what access Applicant has to these records (real time versus post discharge; central access versus network access).

(F) *Prior Work and Experience:* A description of previous motor vehicle safety research work associated with medical cases and/or biomechanics. The Applicant shall not include prior work associated with pedestrians or motorcyclists. The Applicant shall demonstrate its experience with on-site, real-time capture of patients and data collection activities. The Applicant also shall describe its experience in research relating to the documentation of motor vehicle crash injuries and in relating these injuries with in-depth motor vehicle crash investigations. The Applicant shall demonstrate experience in managing a multi-disciplinary research project and in operating a business enterprise as evidenced by the organization of the entity, previous experience collecting medical data and in conducting in-depth crash reconstruction and investigations, and in understanding of related highway safety programs. The Applicant shall describe its experience in obtaining Institutional Research Board (IRB) approval for research objectives.

(G) *Qualifications of Project Personnel and Project Management Experience:* A description of human resources to be used in this Cooperative Agreement effort. The Applicant shall identify the proposed project manager and other personnel considered critical to the successful accomplishment of the project, including a brief description of their respective organizational responsibilities and their qualifications to meet the staff requirements and duties herein described. The roles and responsibilities of the proposed team members and any others included in the application package shall be specified. The proposed level of effort in performing the various activities also shall be identified. The Applicant must furnish an organizational chart and resume for each proposed staff member.

(H) *Past Performance and Financial Responsibility:* The Applicant shall provide the following information:

(1) At least three (3) references who can attest to the past performance history and quality of work provided by the Applicant on previous assistance agreements and/or contracts.

In doing so, the Applicant shall provide the following information for each reference:

(a) Assistance Agreement/Contract Number;

(b) Title and brief description of Assistance Agreement/Contract;

(c) Name of organization, name of point of contact, telephone number, and e-mail address of point of contact at the organization with which the Applicant entered into an Assistance Agreement/Contract;

(d) Dollar value of Assistance Agreement/Contract;

(e) Any additional information to address the issue of past performance and financial responsibility.

(2) The Applicant shall indicate if it has ever appeared on the General Service Administration's (GSA) List of Parties Excluded from Federal Procurement and Non-procurement Programs or on GSA's ''Excluded Parties List.'' If so, the Applicant shall discuss the circumstances leading up to its appearance on either of these lists and its current status to enter into Assistance Agreements (*i.e.,* Cooperative Agreements and Grants) and/or Contracts.

(3) The Applicant shall indicate if it has ever filed for bankruptcy or has had any financial problems that may affect its ability to perform under the Assistance Agreement.

XIII. CIREN System Requirements

1. General Requirements

The Grantee CIREN Center regularly shall enroll, enter, and complete medical/crash case information as reflected in the CIREN computer applications provided by Volpe. The Grantee CIREN Center shall use its best, but at no time less than commercially reasonable, efforts to complete these cases as defined by the systems definitions. The Grantee CIREN Center shall provide adequate, secure storage for the CIREN server and the associated hardware provided as part of the cost of the Cooperative Agreement.

The Grantee CIREN Center shall review case summaries and other narratives for information and remove any information that may suggest judgments of culpability. Culpability will be determined by law enforcement and judicial proceedings.

The Grantee CIREN Center must, as part of its obligations, author papers for medical and/or engineering journals and periodicals; engage in collaborative research with the other CIREN centers and with NHTSA representatives; participate in telephone conference calls; participate in electronic or in-person ''grand rounds'' to review cases; participate in peer review of papers; and attend quarterly meetings in Washington, DC and other locations.

The Grantee CIREN Center shall outline a plan to establish lines of communication among the CIREN crash investigators and the quality control team to facilitate the communication of medical technologies relating to crash research and the introduction of emerging technologies relating to occupant protection systems. This interaction will create a critical link between the NASS, Special Crash Investigations (SCI), and CIREN programs that will mutually benefit the field and medical personnel of each program.

The Grantee CIREN Center shall review overall injury coding to ensure adherence to established procedures. All injuries shall be well documented through the use of radiological reports, including but not limited to CT-scans, X-rays, and Magnetic Resonance Images (MRIs). Injuries shall be sourced to occupant contact points identified in the crash reconstruction process.

The Grantee CIREN Center shall hire and/or install qualified personnel in accordance with its personnel management plan and shall not accept as a staff member anyone who intends to start or continue police, insurance or investigative activities as a second profession during his or her involvement with the CIREN program.

If evidence is detected that project personnel are participating in these activities after the award is made, NHTSA will require immediate removal of the responsible individual(s) from the project and written notification within one (1) business day to the NHTSA Contracting Officer that such removals have taken place. Grantee CIREN Centers that engage in police, insurance or investigative activities shall ensure that staff members assigned to CIREN do not engage in such activities. Organizations shall be required to provide assurances that staff members will not be assigned to the aforementioned duties.

The Grantee CIREN Center's staff, contractors and subcontractors working on this project will be required to sign a confidentiality agreement for each Center, agreeing not to discuss or divulge the source of any data to third parties (*i.e.,* anyone outside the CIREN Network). In addition, staff, contractors and subcontractors must sign security forms required by Volpe in order to be granted access to the CIREN database.

The Grantee CIREN Center shall conduct outreach programs in its community. Target audiences shall include first responders (EMS, fire and law enforcement agencies), medical counterparts, and the general public.

The Grantee CIREN Center shall participate in weekly telephone conferences with the NHTSA CIREN team and representatives of the other CIREN centers. The Grantee CIREN Center shall participate in Quarterly Team Meetings in Washington, DC and other locations. The Grantee CIREN Center shall participate in ''Grand Rounds'' at least yearly.

2. Staffing Requirements and Duties

Note: No staff member assigned to this work effort may be involved in any police, insurance or investigative activities.

Below are the descriptions of the general duties and the required and/or preferred experience levels for each of the professional labor categories NHTSA envisions as necessary to perform the work described in this **Federal Register** Notice. This list may not be exhaustive.

For those labor category descriptions listed below that do not match those of the Applicant's organization, the Applicant shall specify in its proposal each such difference.

Staff shall be comprised of full- and part-time individuals as specified and shall include a multi-disciplinary research team to support collaborative

research efforts, which includes the following individuals:

(A) Principal Investigator. A full time Principal Investigator must be a clinically active emergency room trauma surgeon or a clinically active emergency medicine physician or a clinically active specialist with a minimum of five (5) years experience relating to diagnosis and treatment of motor vehicle injuries and must be a closely affiliated with a Level One Trauma Center.

(B) Co-Principal Investigator. A Co-Principal Investigator (may be full time or part time) with biomechanical, engineering or epidemiological experience. This position requires that this person have an M.D. or a Ph.D. in one of the aforementioned areas. The Co-Principal Investigator also may be a clinically-active trauma surgeon or a clinically active emergency medical physician or a clinically active specialist with experience relating to the diagnosis and treatment of motor vehicle injuries and must be closely affiliated with a Level One Trauma Center.

(C) Crash Investigator. A full time Crash Investigator (may be contracted out) must be NASS-trained or willing to attend the crash investigator training in Oklahoma City. The Crash Investigator does not have to be NASS-certified at the time the proposal is submitted but must agree to take the next available class. A Crash Investigator handling crashes involving children ages 12 and under must be a certified Child Safety Seat Inspector and must maintain yearly certification.

(D) Study Coordinator. A full-time Study Coordinator must oversee data collection coding efforts and outcome. The Study Coordinator shall be familiar with, and shall have a working knowledge of, the various injury coding criteria, including, but not limited to, International Classification of Diseases—9th Edition (ICD–9), Abbreviated Injury Scale (AIS), and Current Procedural Terminology (CPT) codes. The Study Coordinator shall possess basic computer skills and software packages for graphics, documents and presentations.

(E) Other Staff. A statistician, trauma fellow, trauma technician, social worker, and graduate research assistant (Each of these positions may be part-time).

Duties of the staff identified above and other suggested staff shall include:

Principal Investigator: Maintains overall responsibility for the project.

Co-Principal Investigator: Works closely with the Principal Investigator and provides additional biomechanical, engineering, clinical, or epidemiological experience in relation to crash injury mechanisms.

Study Coordinator: Interacts with all project staff, is responsible for contacting the crash investigation team and for obtaining injury data, ambulance/helicopter run sheets, autopsy reports, photographs, and crash reconstruction reports.

Trauma Fellow: Identifies eligible study patients and obtains the consent of the patients. Documents all injury data and follows the patients throughout their hospital stay. Provides valuable insight into the case history of each patient and presents clinical observations at case review meetings.

Trauma Technician: Assists the Trauma Fellow in identifying eligible study patients and obtaining the consent of these patients. Takes photographs of patient injuries and collects x-rays, CT scans, etc. for presentation at case reviews.

Social Worker: Interviews patients at the time of admission regarding circumstances of the crash, psycho social characteristics, risk-taking behaviors, etc. Obtains baseline and 6- and 12-month follow-up data on patient outcomes.

Graduate Research Assistant: Examines epidemiological trends in motor vehicle injuries. Abstracts autopsy reports from the proper local or state authorities.

Crash Investigator: Locates the vehicle(s) involved in the crash. Performs detailed, NASS quality crash reconstruction, documenting damage profiles, crush measurements, intrusions, occupant contact points, etc. Presents findings at case review meeting and participates in multi-disciplinary discussions concerning injury-producing mechanisms.

3. Specific Work Requirements

Medical/Crash cases selected for inclusion shall follow the criteria outlined in Appendix 1, ''2005 CIREN Case Inclusion Criteria for Adults (13+)'' and ''2005 CIREN Inclusion Criteria for Infants and Children (12 and Under)'' of this **Federal Register** Notice. Utilizing the Automated Data Collection and Processing System provided by Volpe, the Grantee CIREN Center shall:

(A) Collect Occupant and Injury Data. Collect occupant information and injury data, including a narrative description of all injuries, relevant test results (including x-rays, MRIs, CT-scans), pre-hospital and hospital medical data, rehabilitation and residual medical condition data, and available medical costs. Coding of enhanced injury information is derived from a variety of sources including the National Trauma Registry, the Orthopedic Trauma Association, CPT Codes, ICDM, and the EMS National Guidelines.

The Grantee CIREN Center's medical team shall obtain patient consent prior to enrolling the patient in CIREN. Pertinent medical history and medical records detailing all care given the patient as a result of the motor vehicle crash shall be obtained and entered into the database. The SF 36 questionnaire shall be given to adult patients and the Pediatric Quality of Life questionnaire to all children (or their appropriate guardians) prior to discharge, and arrangements shall be made for completion of the 6-month and 12-month follow-up questionnaire to track outcome measurements. The team shall review injury information to ensure that all injuries have been identified, documented through photographs or radiological images, and coded per established NASS AIS–90 protocols (familiarity with the Association for the Advancement of Automotive Medicine's injury coding scheme will facilitate the fulfillment of this requirement).

The number of medical/crash cases completed will depend on the level of effort the Grantee CIREN Center addresses in its work proposal. CIREN medical/crash cases are generally limited to people who are seriously injured in motor vehicle crashes and transported to the center participating in the study. Medical/crash cases will be selected based on CIREN criteria at the time of enrollment. Medical/crash cases are selected based on NHTSA priority issues. There are separate criteria for adults and children.

The medical team also must obtain Institutional Review Board (IRB) approval for research objectives. The team should refer to the **Federal Register** Notice (Vol. 68, No. 59, page 15039) dated March 27, 2003, announcing NHTSA's status as a ''public health authority'' in gaining IRB approval to promote thorough and complete data access collection.

At least one of the Principal Investigators must be a clinically active emergency room trauma surgeon or a clinically active emergency medicine physician or a clinically active specialist with experience relating to diagnosis and treatment of motor vehicle injuries and must be affiliated closely with a Level One Trauma Center.

(B) Collect Crash Data. Collect crash reconstruction data, including detailed scene and vehicle inspections. Scene inspections shall include retrieval of physical evidence, determination of the location, direction and speed of

vehicle(s) and measurement of tire marks. Crush profile, deltaV, and Collision Deformation Classification (CDC) must be determined.

Exterior vehicle inspections shall include detailed measurements of crash damage including amount of crush. Interior vehicle inspections shall include examination of glazing, restraint systems, steering column, seats and other interior components to document precisely the extent of damage (intrusion) and occupant contact points.

Crash scene photographs should depict each involved vehicle's pre-impact path of travel, point of impact and post-impact trajectory to final rest. Photographs of the vehicle shall include shots from all angles, with and without any gauges. Digital vehicle photographs shall be taken as specified in the ''National Automotive Sampling System CDS Digital Photography Guidelines'' (dated January 2002), provided to the Grantee CIREN Center.

(C) Investigate and Reconstruct the Crash. Undertake to investigate and reconstruct the crash and document injuries sustained. The reconstructions will attempt to determine the location, crash direction and magnitude of the vehicle impact(s) and their relation to passenger compartment integrity.

The crash investigator shall use the software package VISIO to draw and document the crash scene and shall be familiar with the functioning of various automotive components, including but not limited to air bags, safety belts, pretensioners, and event data recorders. The crash investigator shall be knowledgeable on basic inspection techniques for the exterior of the vehicle including crush measurement techniques. The crash investigator also shall be knowledgeable about basic inspection techniques for the interior of the vehicle including occupant seats, integrity, glazing, occupant area contact points, and intrusion.

(D) Conduct Monthly Case Reviews. The Grantee CIREN Center shall conduct monthly medical/crash case review meetings to critique its own medical/crash cases including a quality control review of the data to help ensure more thorough acquisition, reporting, and coding of the crash and injury data. Crash dynamics shall be reviewed in order to enhance further the accuracy of injury source determination. The Grantee CIREN Center shall notify the NHTSA COTR and NHTSA CIREN Program Manager via email of the date, time, and place of the meeting at least two (2) weeks prior to the meeting date. The notification also shall include the year, make, model of the crash vehicles and information on the case occupant (age, sex, seating location and injuries sustained).

Each medical/crash case must be reviewed within ninety (90) business days of the case discharge date. Discussion at the monthly medical/crash case review meetings shall review all aspects of each crash (*i.e.*, scene diagram, vehicle movement, vehicle crush, vehicle intrusion, occupant location, occupant injuries and occupant kinematics). These reviews shall facilitate feedback to determine the completeness and accuracy of the data. These reviews shall include appropriate professional input from the multi-disciplinary team members based on their specific areas of expertise.

(E) Participate in Special Research Programs. The Grantee CIREN Center may be asked to participate in special research programs when its area of expertise is needed to respond to NHTSA's priority research goals. The Grantee may be requested, secondary to area of expertise, to work directly with NHTSA on priority projects. This work effort may be substituted for one or more research paper requirements output for that particular Grantee subject to NHTSA's discretion.

4. Security Requirements

CIREN deals with highly sensitive material that must not be exposed to improper access within the Grantee CIREN Center, across other CIREN centers, or across the wide area network. Personal and location data identifiers must not be accessible outside the Grantee CIREN Center originally acquiring the data.

The Grantee CIREN Center shall follow established sanitization procedures for personally identifiable information as outlined in Appendix 2, ''Special Provisions'' of this **Federal Register** Notice. Information released to the general public shall not include any ''personal and/or location identifiers'' or any ''sensitive medical information'' as defined in Appendix 2 of this **Federal Register** Notice and shall not be traceable back to the CIREN collection site or Center.

5. Processing Requirements

Certain processing requirements must be in place in order to expedite crash investigation procedures and crash documentation, as well as documentation of initial treatment. These include the establishment and maintenance of a good working relationship with law enforcement agencies, tow yards, EMS staff, and rehabilitation clinics.

Procedures shall be established for monthly in-house medical/crash case reviews. These reviews shall include detailed discussion of the CIREN cases, including all medical and crash-related data. These reviews shall take place before cases are submitted to NHTSA's quality assurance contractor for Quality Control.

The project will involve participation in the systematic collection and evaluation of new data concerning motor vehicle crashes by a multi-center network. The outcomes/products of this project may include publication in a professional journal and/or presentations at professional meetings. Participation at CIREN meetings (quarterly, team, grand rounds, etc.) is also required.

6. Computer Equipment

Equipment required for work under an awarded Cooperative Agreement will be furnished by NHTSA as part of each Grantee CIREN Center's cost under the Agreement and will remain government-owned equipment. The cost of equipment will be charged against the Grantee's award amount. Grantees shall include a line item for $10,000 for each site in their budget for the base year to cover the cost of this equipment.

During the period of performance of the Agreement, the Grantee CIREN Center will coordinate the planned purchase of all new or replacement computer systems (hardware and software) with computer personnel at the Volpe Center in defining the system specifications for the planned purchase. The Volpe Center is the centralized repository for the CIREN system and all CIREN data. System compatibility is a critical component of the CIREN network and this coordination is considered vital to maintaining system viability.

The NHTSA COTR and Volpe must approve new equipment before purchasing if reimbursement is requested from CIREN funds. Equipment not approved will not be permitted to connect to the CIREN network.

Grantees shall include a line item for $5,000 in their budget for option year three (3) to cover the cost of replacing any outdated equipment.

The Grantee CIREN Center is responsible for keeping up to date on new versions of software as prescribed by Volpe. The Grantee CIREN Center shall have in-house Information Technology (IT) support and have, or arrange to have installed, a FTS 2000 T–1 line and be responsible for its monthly maintenance fees which will be deducted from the award total. This T1 line is dedicated to the CIREN through the FTS2000 provider and is connected

to the CIREN server. This server must be installed in a secure location. Past experience has shown that the minimal lead time for new installations is 60 days. If the Applicant will require this line to be installed, provide the physical location (room number, street address, including cross streets) where this server will be housed. Every effort will be made by the NHTSA COTR to expedite this installation. The T1 line installation and configuration cost is $4,000 for each new site. This is a one-time charge and includes the installation fee and the labor required to coordinate and configure the T1 line into the CIREN system. Grantees shall include a line item in their budget for the base year for this expense. Maintenance of the T1 line is a continuing charge of $550.00 per month that will be paid by the Grantee. Grantees shall include a line item in their budget for the base year and all option years for this item.

XIV. Application Review Process and Evaluation Factors

Each application package will be reviewed initially to confirm that the Applicant is an eligible candidate (as described under Eligibility Requirements) and has included all of the items specified in the Application Procedure section of this **Federal Register** Notice. The NHTSA Evaluation Committee will evaluate applications submitted by eligible candidates. Awards may be made to multiple offerors in any combination of the three (3) performance levels, as indicated in Section IV of the **Federal Register** Notice. It is anticipated that awards will be made in April 2005. The applications will be evaluated using the following criteria (listed in descending order of importance).

Factor	Weights
Factor 1. Work Plan, Technical Approach and Technical Capability and Understanding	40
Factor 2. Personnel Qualifications, Management Capabilities	30
Factor 3. Corporate Experience	15
Factor 4. Past Performance and Financial Responsibility	15

The proposed scoring system is based on a score of 1,000, which is the maximum score a proposal can accumulate by receiving an outstanding rating on each evaluation factor. The quality rating scheme and evaluation factor weights are:

Factor	Score	Weight	Maximum
1	0–10	40	400
2	0–10	30	300
3	0–10	15	150
4	0–10	15	150

As shown below, each evaluation factor can receive a maximum score of ten points in accordance with the following quality-rating scheme and definitions:

0.0–3.9 Unsatisfactory.
4.0–6.9 Below Average.
7.0–7.9 Average.
8.0–8.9 Above Average.
9.0–10.0 Outstanding.

0.0–3.9 Unsatisfactory—Grossly insufficient detail or inadequate approach, methods, organization, or capabilities. Serious deficiencies exist in significant areas; the proposal cannot be expected to meet the minimum **Federal Register** Notice requirements without major revisions. Or the proposal is so deficient that it is not capable of being evaluated.

4.0–6.9 Below Average—Fails to meet the minimum **Federal Register Notice** requirements, but is of such a nature that it has correction potential without major revisions to the proposal.

7.0–7.9 Average—Generally meets minimum **Federal Register** Notice requirements; responds to all major aspects of the **Federal Register** Notice; capable of achieving desired objectives of the procurement.

8.0–8.9 Above Average—Extensive and detailed response to all **Federal Register** Notice requirements; potential for high quality performance results in one or more areas covered by the procurement.

9.0–10.0 Outstanding—Comprehensive, in-depth response to all **Federal Register** Notice requirements; professionally superior approach. Consistently high quality performance results likely in all major areas covered by the procurement.

1. Factor 1. Work Plan, Technical Approach, and Technical Capability and Understanding. Weight: *40*. The evaluation of the Applicant's proposal shall include:

(A) The adequacy of the Applicant's plan to enroll cases; complete tasks associated with the initiating, tracking, and submission of enrolled cases; and perform in-house quality control;

(B) The adequacy of Applicant's staffing plan;

(C) The Applicant's degree of understanding of trauma system injury coding and the methodologies used in an electronic data collection system;

(D) The Applicant's ability to effectively communicate results of research efforts in publications.

2. Factor 2. Personnel Qualifications, Management Capabilities. Weight: *30*. This evaluation shall measure the qualifications of the Applicant's proposed Principal Investigator and other team members as demonstrated by their personnel's resumes and organizational chart with respect to the following:

(A) The proposed Principal Investigator's experience in the management of, collection, coding, and validation of medical data;

(B) The proposed team members' experience in verifying crash-related physical evidence with the reported injury, injury mechanism, occupant kinematics, damage severity, and restraint usage;

(C) The proposed team members' experience in applying scientific theories and in analyzing physical evidence, substantiating injury mechanisms, and reconstructing crash events and speeds;

(D) The experience of the proposed Project Coordinator in managing the prospective research program.

(E) Demonstrated proof (submission of 3 years of trauma registry data) that Applicant's medical institution receives a sufficient number of motor vehicle crash victims from which cases can be selected for the CIREN program.

3. Factor 3. Corporate Experience Weight: *15*. The Applicant's corporate experience on previous Assistance Agreements and/or Contracts shall be evaluated. This evaluation shall include:

(A) The Applicant's demonstrated experience in managing a multi-disciplinary research project and in operating a business enterprise as evidenced by the organization of the entity; previous experience collecting medical data and conducting in-depth crash reconstruction and investigations; experience in obtaining IRB approval for

research objectives; and understanding of related highway safety programs;

(B) The Applicant's level of experience with on-site, real-time capture of patients; data collection activities; and delivery of products in the form of research papers, technical presentations, etc. to diverse audiences.

4. Factor 4. Past Performance and Financial Responsibility. Weight: *15*. The Applicant's past performance and the extent to which the Applicant has fulfilled its performance and financial obligations on previous Assistance Agreements and/or Contracts shall be evaluated. This evaluation shall include:

(A) The Applicant's record of complying with the terms and conditions applicable to previous Assistance Agreements and/or Contracts, including the quality of services or deliverables provided and the adherence to milestones and performance and delivery schedules;

(B) The degree to which the Applicant efficiently achieved the purposes of previous Assistance Agreements and/or Contracts within the approved budget;

(C) The degree to which the proposed Grantee complied with the terms and conditions of previous Assistance Agreements and/or Contracts;

(D) The degree to which the proposed Grantee complied with applicable Office of Management and Budget (OMB) Circulars and/or the Federal Acquisition Regulation on previous Assistance Agreements and/or Contracts;

(E) The level of financial stability possessed by the proposed Grantee.

XV. Terms and Conditions of Award

Prior to award, each applicant shall comply with the certification requirements of 49 CFR part 20, Department of Transportation New Restrictions on Lobbying, and 49 CFR part 29, Department of Transportation Government-wide Debarment and Suspension (Non-procurement) and Government-wide Requirement for Drug Free Work Place (Grants). Certification requirements are electronically available for download at *http://www.whitehouse.gov/omb/grants/index.html.*

In addition, prior to award each applicant shall comply with the NHTSA General Provisions for Assistance Agreements. (Attached as Appendix 5.) The following exceptions to the NHTSA General Provisions for Assistance Agreements apply:

Section 2 (Allowable Costs): Item (c) is not applicable to this requirement.

Section 5 (Data Collection): This section is not applicable to this requirement.

Section 7 (Rights in Data): This section is not applicable to this requirement. (*See* Appendix 2 Special Provisions for appropriate related material).

XVI. Reporting Requirements and Deliverables/Milestones of the Cooperative Agreement

An awarded Cooperative Agreement will include the following requirements:

1. Progress Reports

The Grantee CIREN Center shall provide quarterly progress reports to NHTSA. These reports shall describe work completed to date, any identified problem areas or concerns, and recommended solutions, including technical assistance from any of the parties in the Cooperative Agreement.

2. Financial Reports

The Grantee CIREN Center shall provide quarterly financial reports to NHTSA. These reports shall include all costs for the current period, as well as cumulative costs. The Center is expected to stay within budget and provide a summary of expenditures using the following categories:

(A) *Personnel:* Provide level of effort (percentage of time spent) and salary or estimated compensation. Include rate data for fringe benefits.

(B) *Travel and Accommodations:* Travel and related costs are to be provided for all travel performed in support of the Cooperative Agreement. These costs include travel and other related expenses for essential staff to participate at CIREN conferences. Grantee and staff shall ensure that claims for hotel and meals are within maximum allowable per diem and will make every effort to obtain the lowest transportation fares available.

(C) *Supplies:* Provide cost of office supplies, photographic slides, film and processing, postage/delivery, and copying charges.

(D) *Other Direct Costs:* Include any other cost items deemed by the parties to be necessary and allowable as a direct expense to the effort, such as preparation of conference materials and publication costs resulting from publications directly relating to the Cooperative Agreement.

(E) *Indirect Costs:* Include indirect costs allowable to the effort in accordance with the Grantee CIREN Center's negotiated indirect costs rate agreement established with the cognizant federal audit agency.

3. Property Inventory

The Grantee CIREN Center shall maintain all Government-furnished equipment or Government acquired equipment in working order. The Grantee CIREN Center shall provide NHTSA with a yearly listing of all Government-furnished equipment or Government acquired equipment on the Contractor Inventory Schedule (NHTSA Form HS–324). The Grantee CIREN Center shall not dispose of any equipment without the prior written approval of the COTR.

4. Requirements for Printed Material

The print materials must be provided to NHTSA in both laser format and appropriate media formats (disk, CD–ROM).

5. Program Materials

Presentation materials for CIREN public meetings shall be submitted within two (2) weeks of the presentation and shall be submitted in the following formats for placement on CIREN's homepage of the World Wide Web:

- Original application format, for example, *.doc *.ppt; etc.
- Section 508 compliancy checklist.
- A PDF file for viewing with Adobe acrobat.
- An HTML file.

Contractors preparing publications for NHTSA must submit them in a format ready for posting on the Web. All documents must be Section 508 compliant and both Netscape (versions 4.0 or later) and Internet Explorer (versions 5.0 or later) compliant. All Web/HTML documents must comply with the accessibility standards of 36 CFR § 1194.22 that implement Section 508 of the Rehabilitation Act of 1973. All submissions shall include a completed web-based Internet Information and Application Section 508 Checklist. These standards and guidelines are available for viewing in greater detail at the Access Board Web Site at: *http://www.access-board.gov/sec508/guide/1194.22.htm.*

Issued on: December 3, 2004.

William T. Hollowell,

Acting Associate Administrator for Vehicle Safety Research.

APPENDIX 1.—2005 CIREN CASE INCLUSION CRITERIA FOR ADULTS (13+)

Crash type	Crash direction	Vehicle criteria	Restraint criteria	Occupant positions	Injury thresholds	Case priorities/issues
Frontal	10 to 2 o'clock Full frontal Offset frontal	CY–8 yrs	Airbag, Airbag and Belt.	Front row	AIS≥3 or *	• Airbag or airbag + belt/other safety tech.: —low delta V (below test std) with high AIS (ISS 13+) —-high delta V (above test std) with low AIS (ISS 8–12). • Fatality (worthy of review: useful crash scenario, complete autopsy (scan/capture))*non-catastrophic*.
Side	8 to 10 o'clock 2 to 4 o'clock	CY–8 yrs FMVSS No 214 Compliant	Any and all, including unrestrained on struck side and far side.	Any	AIS≥3 or *	• Occupant on struck side, far side, and or side impact where airbag deploys at the case occupant position —low delta V (below test std) with high AIS (ISS 13+) —high delta V (above test std) with low AIS (ISS 8–12). • Fatality (worthy of review: useful crash scenario, complete autopsy (scan/capture)) *non- catastrophic*.
Rollover	All	CY–8 yrs FMVSS NO 214 Compliant	Any and all, including unrestrained (EXCEPTION = 100% EJECTION).	Any	AIS≥3 or *	• Vehicles equipped with rollover curtains/other safety tech. (pretension belts, Adv. Airbags). • Fatality (worthy of review: useful crash scenario, complete autopsy (scan/capture)) *non-catastrophic*.
Fire	All	Any	Any and all, including unrestrained.	Any	AIS≥2	• Burn injury is AIS≥2 • Fuel system failure to cause fire.
PI Special Interest**	Any	Any	Any	Any	Any	• Maximum of 10% of sites total year case count +. • Must get NHTSA approval prior**.
Success Case***	Any	CY–8 yrs	Appropriate restraint usage (belt and/or airbag).	Any	Any	• High energy crashes with little or no injury to the case occupant (ISS 0–7). • Fatalities or seriously injured occupant in the same vehicle w/comparable restraint/scenario. • Must get NHTSA approval prior***.

*AIS of 2 in 2 or more body regions with medical significance.
*AIS of 2 in the lower extremity with articular injury, peri-prothestic fractures, or spine injuries requiring operative fixation or halo.
**Max. PI SI cases allowed per site per year would be 5 based on a 50 case enrollment. Site personnel must contact Mark Scarboro or Cathy McCullough from NHTSA to obtain approval prior to case occupant enrollment.
***Cases must be extraordinary for consideration—NHTSA approval required.

APPENDIX 1.—2005 CIREN INCLUSION CRITERIA FOR INFANTS AND CHILDREN (12 AND UNDER)

Crash type	Crash direction	Vehicle criteria	Restraint criteria	Occupant positions	Injury thresholds	Case priorities/issues
Frontal	10 to 2 o'clock Full frontal Offset frontal	Any	—CRS used by case occupant.	Front Any	AIS>=1 AIS>=2	• Airbag deployment at occupant position. • Advanced airbag systems. • Curtain type airbags. • Safety belt pretensioners. • Fatality (worthy of review: useful crash scenario, complete autopsy (scan/capture)). • CRS misuse.
Side	8 to 10 o'clock 2 to 4 o'clock	FVMSS NO 214 Compliant.	—CRS used by case occupant. —2 or 3 point manual belt —Side Airbag w/wo belt —Low priority = unrestrained	Any	AIS>=2	• Side airbag systems. • CRS misuse. • Integrated 3 pt belts in position 22,32... • Fatality (worthy of review: useful crash scenario, complete autopsy (scan/capture)).
Rear	4 to 8 o'clock	Any	—Rear facing CRS used by case occupant.	Any	AIS>=2	• CRS misuse. • Fatality (worthy of review: useful crash scenario, complete autopsy (scan/capture)).

APPENDIX 1.—2005 CIREN INCLUSION CRITERIA FOR INFANTS AND CHILDREN (12 AND UNDER)—Continued

Crash type	Crash direction	Vehicle criteria	Restraint criteria	Occupant positions	Injury thresholds	Case priorities/issues
Rollover	N/A	FVMSS NO 214 Compliant.	—CRS used by case occupant. —2 or 3 point manual belt —Airbag w/wo belt —Low priority = unrestrained	Any	AIS>=2	• Side airbag systems and roll curtains. • Safety belt pretensioners • Fatality (worthy of review: useful crash scenario, complete autopsy (scan/capture)).
Fire	N/A	Any	Any	Any	AIS≥=2	• Fatality (worthy of review: useful crash scenario, complete autopsy (scan/capture)). • Fuel system failure to cause fire.
PI Special Interest **	Any	Any	Any	Any	Any	Maximum of 10% of sites total year case count. Must get NHTSA approval prior**.
Success Case **	Any	Any	—Properly used and appropriate restraint type.	Any	N/A	• High energy crashes with little or no injury to the child/infant occupant. • Fatalities in the same vehicle (Must get NHTSA approval prior**).

**Site personnel must contact Mark Scarboro or Cathy McCullough from NHTSA to obtain approval prior to case occupant enrollment on these cases.

Appendix 2—Special Provisions

A. *CIREN Data Collection Requirements.* The CIREN database, as configured at this time, consists of approximately 900 discrete fields of data concerning motor vehicle crashes relating to crash reconstruction and medical injury profiles. Information collected for each case and about each case occupant must be sufficient to ensure data input for each of these fields of data, where applicable and available. The exact configuration of the CIREN database is subject to change as periodic upgrades are made to the system.

B. *Protection of Individual Privacy.*

1. *Personal and/or Location Identifiers.* Personal and/or Location Identifiers, which may be discrete (*e.g.*, database elements) or visual (*e.g.*, photographs that include the face, without masking), shall not be included in the CIREN database. The following information is deemed to be ''Personal and/or Location Identifiers'':

Discrete Identifiers:

Patient's name, address, telephone number

Social Security Number, patient ID number

Specific location identifiers (e.g., town, city, county, state, road name)

Employment information

Driver license number, license plate

Vehicle Identification Number*

Date of birth**

Date of accident***

Time of accident****

* Last six digits (sequential production portion) of VIN will not appear in the CIREN database.

** Age only will appear in the CIREN database.

*** Month and year only will appear in the CIREN database.

**** ''Morning,'' ''Afternoon'' or ''Evening'' only will appear in the public CIREN database.

Visual Identifiers: All photographs, drawings, etc., with recognizable identifiers to personal identity or to location of the crash. This includes unmasked photographs of faces, license plates, car vendor bumper plates, store signs, locality signs, and road signs.

2. *Sensitive Medical Information:* Sensitive Medical Information shall be included in the database only in specially designated fields, as directed by Volpe or NHTSA. The following information is deemed to be Sensitive Medical Information:

Patient photographs, X-rays, CT-Scans, MRIs, detailed medical information and/or history (*e.g.*, surgical procedures and medical treatments, pre-existing medical conditions, laboratory results).

3. *Sanitization and Data Segregability.* The Grantee CIREN Center, NHTSA, NHTSA's quality assurance contractor and Volpe shall work cooperatively to ensure that all data has been properly sanitized to remove all Personal and/or Location Identifiers, before the data are added to the CIREN database, and that all Sensitive Medical Information resides only in specially designated fields, so that such information is segregable from the remaining information in the database.

4. *Consent and Dissemination.* The Grantee CIREN Center shall be responsible for obtaining informed consent for each case occupant, to the extent required by its Institutional Review Board. The Grantee CIREN Center shall ensure that such informed consent is sufficient under its established policies and procedures and consistent with applicable laws and regulations, to enable the information collected to be used and disseminated in full accord with the terms and restrictions of the Cooperative Agreement.

C. *Rights in Data and Use of Information.*

1. *In General.* For the purposes of this paragraph, CIREN Tier 1 Data means all sanitized data resident in the CIREN database, excluding Sensitive Medical Information, as described above but including injury coding information based on the Abbreviated Injury Scale used by NHTSA; and CIREN Tier 2 Data means all sanitized data resident in the CIREN database, without exclusions.

2. *CIREN Tier 1 Data.* CIREN Tier 1 Data shall be considered to be in the public domain and available for access or release by or to any person. The parties to the Cooperative Agreement shall have unlimited rights to use, disclose, or reproduce such data and to prepare derivative works, distribute copies to the public, and display such data publicly, in any manner or for any purpose permitted by law.

3. *CIREN Tier 2 Data.*

(a) Except as provided in Section C.3(b) of Appendix 2, access to CIREN Tier 2 Data shall be limited to trauma centers that are CIREN participants and the research sponsors (if any) that are parties to their agreements, NHTSA and its agents and contractors, and Volpe. Use of this data shall be strictly limited to the research purposes of the Cooperative Agreement in furtherance of traffic safety, medical research to reduce motor vehicle crash injuries, and improved vehicle design. Any other use is prohibited. Without limiting the generality of the foregoing, prohibited uses include but are not limited to any use in support of offensive or defensive litigation. NHTSA will protect all Sensitive Medical Information residing in the CIREN database from public dissemination to the full extent authorized by 5 U.S.C. 552.

(b) The parties understand that, from time to time, access to CIREN Tier 2 Data by others may properly be authorized, by NHTSA only, for limited research purposes in furtherance of vehicle or traffic safety, injury reduction, and improved vehicle design, and subject to strict limitations against further disclosure. NHTSA agrees that any such authorization shall be subject to all applicable laws, regulations, policies, and procedures.

D. *Dissemination of Information By Educational Institutions.*

1. *Publications.* The Department of Transportation (''DOT'') desires widespread dissemination of the results of supported transportation research. Accordingly, the Grantee CIREN Center may publish documented research results in professional journals, books, trade publications, or other appropriate media. All costs of such academic publications shall be borne by the Grantee CIREN Center and shall not be

charged to NHTSA and/or Volpe under the Cooperative Agreement or any other Federal agreement.

2. *Disclaimer.* Any copy of material published must contain an acknowledgment of NHTSA's support of the research effort with the cooperative agreement number and a disclaimer stating that the published material represents the position of the author(s) and not necessarily that of NHTSA. Articles for publication or papers to be presented to professional societies do not require authorization of NHTSA prior to release. However, two copies of each article shall be transmitted to the NHTSA COTR and the CIREN program manager for Agency review at least two weeks prior to the date of release or publication. A copy of the final paper once it is published or presented shall be submitted to the NHTSA COTR and the CIREN program manager.

3. *Press Releases.* Press releases concerning the results or conclusions from any research conducted under the Cooperative Agreement shall not be made or otherwise distributed without the advance review and written consent of the other participating parties. Notwithstanding the foregoing, the parties may respond to media inquiries relating to articles or papers published or submitted for publication pursuant to Section D.2 of Appendix 2 of the Cooperative Agreement without first obtaining the consent of any other party.

4. *No Waiver.* Notwithstanding the foregoing, publication or other presentation of data obtained through the Cooperative Agreement shall not release the Grantee CIREN Center or any of its employees from its obligation to prepare and submit other reports or case summaries containing the findings and results of research, as set forth in the Cooperative Agreement.

APPENDIX 3.—ANNUAL CIREN WORK PRODUCTION DELIVERABLES

Center level	Cases/yr	Papers/yr	2nd Qtr review cases enrolled	2nd Qtr review cases QC ready	2nd Qtr review paper submit	3rd Qtr review cases enrolled	3rd Qtr review cases QC ready	3rd Qtr review paper submit	Final Qtr cases enrolled	Final Qtr cases QC ready*	Final Qtr paper submit
Level 1											
Year 1 ...	45	3	23	8	1	33	20	2	45	32	3
Year 2–5	50	3	25	9	2	37	21	3	50	37	3
Level 2											
Year 1 ...	36	2	18	6	1	27	15	1	36	24	2
Year 2–5	40	2	20	7	1	30	16	2	40	30	2
Level 3											
Year 1 ...	27	1	14	4	0	20	10	1	27	16	1
Year 2–5	30	1	15	5	1	22	11	1	30	22	1

* Cases not completed for QC in the enrollment year must be completed in the first quarter of the subsequent year.

Standard timeline for "QC Ready" = Four months from enrollment.

QC Ready or "In Review" status indicates completion and site review of a crash case with the exception of the outcome data (SF–36/Peds QL).

Outcome data is required for CIREN cases within 14 months of the original crash date.

Paper submission may be waived if the CIREN site is participating in research on specific issues for NHTSA (See Section XIII(3)(E)).

Appendix 4—Definition of Acronyms

AIS Abbreviated Injury Scale
AIS–90 Abbreviated Injury Scale—1990 Version
CDC Collision Deformation Classification
CDS Crashworthiness Data System
CIREN Crash Injury Research and Engineering Network
CPT Current Procedural Terminology
CT Computed Tomography
DOT epartment of Transportation
EMS Emergency Medical Services
ICD–9 International Classification of Diseases—9th Edition
ICDM International Classification of Diseases Modifications
IT Information Technology
IRB Institutional Review Board
MRI Magnetic Resonance Image
NHTSA National Highway Traffic Safety Administration
NASS National Automotive Sampling System
OMB Office of Management and Budget
OTA Orthopaedic Trauma Assessment
SCI Special Crash Investigations
T1 Type of Communication Circuit
U.S. United States
VISIO A software package used to create scene diagrams

Appendix 5—General Provisions for Assistance Agreements National Highway Traffic Safety Administration

This assistance agreement shall be subject, as applicable, to the administrative requirements contained in the following documents or regulations which are hereby incorporated by reference, with the same force and effect as if they were given in full text:

49 CFR Part 18—Department of Transportation Uniform Administrative Requirements for Grants and Cooperative Agreements to State and Local Governments. *http://www.dot.gov/ost/m60/grant/49cfr18.htm.*

49 CFR Part 19—Department of Transportation Uniform Administrative Requirements for Grants and Agreements with Institutions of Higher Education, Hospitals, and Other Nonprofit Organizations, and, for purposes of this agreement, with commercial organizations, except as otherwise provided elsewhere in these terms and conditions. *http://www.dot.gov/ost/m60/grant/49cfr19.htm.*

49 CFR Part 20—Department of Transportation New Restrictions on Lobbying. *http://www.dot.gov/ost/m60/grant/49cfr20.htm.*

49 CFR Part 29—Department of Transportation Government-wide Debarment and Suspension (Nonprocurement) and Government-wide Requirements for Drug-Free Workplace (Grants). *http://www.dot.gov/ost/m60/grant/49cfr29.htm.*

In addition, the following provisions are applicable to this agreement that provides Federal financial assistance authorize by statute.

1. Definitions
2. Allowable Costs
3. Audit Requirements
4. Standard Patent Rights
5. Data Collection
6. Protection of Individual Privacy
7. Rights in Data
8. Restrictions on Printing
9. Other Administrative Provisions and Assurances
10. Order of Precedence

1. *Definitions.* Throughout this assistance agreement, the following terms shall have the meanings set forth below:

a. The term "Secretary" means the Secretary of the Department of Transportation or his duly authorized designee.

b. The term "Department" means the Department of Transportation (DOT).

c. The term "Agency" means the National Highway Traffic Safety Administration (NHTSA).

d. The term "Contracting Officer" or "CO" means any person authorized to execute the agreement on behalf of the NHTSA.

e. The term "Contracting Officer's Technical Representative" or "COTR" means the CO's authorized representative responsible for the programmatic/technical administration of the agreement, the evaluation of performance under the

agreement, the acceptance of technical reports, and for other specific responsibilities as may be stipulated in various provisions of the agreement.

f. The term ''Grantee'' means the recipient of the award of the assistance agreement, whether a grant or cooperative agreement, and includes the following:

(1) States, local governments or Federally recognized Indian tribal governments as defined in 49 CFR Part 18.

(2) Nonprofit organizations including public and private institutions of higher education, public and private hospitals, and other quasi-public and private nonprofit organizations as further described in 49 CFR Part 19.

(3) Commercial organizations including small and large businesses organized for profit; organizations which are not otherwise included among those specified in 49 CFR Part 18 or 49 CFR Part 19; or international organizations.

g. The term ''Third-Party Contract'' means any legal instrument entered into between the grantee and a third party, or any lower tier, for the performance of a portion of the effort provided for under this assistance agreement and includes contracts, grants, and cooperative agreements.

h. The term ''Third-Party Contractor'' means the recipient of a ''Third-Party Contract.''

i. The acronym ''OMB'' means the Office of Management and Budget.

j. The acronym ''FAR'' means Federal Acquisition Regulation.

2. Allowable Costs.

a. Payments up to the amount specified in the assistance agreement shall be made only for costs determined by the CO to be allowable, allocable and reasonable in performing the effort under the agreement in accordance with its terms and with the following cost principles:

(1) OMB Circular A–21 (applicable to educational institutions).

(2) OMB Circular A–87 (applicable to State and local governments and Federally-recognized Indian tribal governments).

(3) OMB Circular A–122 (applicable to non-profit organizations).

(4) FAR 31.2 (applicable to all other organizations).

b. During performance of this assistance agreement, certain direct cost expenditures, not itemized in the approved budget, may become necessary. In order to avoid subsequent disallowances, or dispute based on unreasonableness or unallocability, written agreement in advance of the incurrence of such costs in appropriate. In addition, selected cost principles contain a number of items of cost for which prior approval is required. Direct cost expenditures requiring such written notification from the CO include, but are not limited to, the following.

(1) Purchase or rental of any item of general purpose equipment having a useful life of more than two years and an acquisition cost of $500 or more; and all items of office and automatic data processing equipment, regardless of cost, if not itemized in the approved budget.

(2) Purchase or rental of any item of special purpose equipment having a unit cost of $1,000 or more if not itemized in the approved budget.

(3) Personnel movement of a special or mass nature not itemized in the approved budget.

(4) Foreign travel (each separate trip) not itemized in the approved budget.

(5) Domestic travel when not included in the approved budget or when the cumulative travel expenditures will exceed the approved travel budget by $500 or 25%, whichever is greater.

(6) Consultant and professional services not itemized in the approved budget.

(7) Subcontracts not identified in the approved budget, except those for incidental supplies, materials, and general support services.

(8) Purchase or lease of any interest in real property, or improvements in real property not itemized in the approved budget.

c. NHTSA may provide in advance for costs to be incurred or reimburse costs accrued by the grantee up to the maximum amount of the Federal assistance payable for the period of performance. However, payment of such costs, whether in advance or by reimbursement, shall not constitute a final determination by NHTSA of the allowability of such costs and shall not constitute a waiver of any violation of the terms of the assistance agreement committed by the grantee. NHTSA shall make a final determination as to the allowability only after the final audit is completed, if required, or at the time of final payment.

d. NHTSA shall not be obligated to reimburse the grantee for outlays (costs) in excess of the Federally-funded amount of the assistance agreement unless and until the CO executes a modification which increases the Federally-funded amount. The Federally-funded amount is the amount actually obligated under the agreement which may be less than or equal to the budgeted Federal share of the agreement.

3. *Audit Requirements.*

a. If this assistance agreement is with an institution of higher education, hospital or other nonprofit organization, the grantee shall conduct audits in accordance with the provisions of OMB Circular A–133, ''Audits of Institutions of Higher Education and Other Nonprofit Organizations''.

b. If this assistance agreement is with a State or local government of Federally-recognized Indian tribe government, the grantee shall obtain audits in accordance with the Single Audit Act of 1984 (31 U.S.C. 7501–7), as provided in 49 CFR Part 18.26.

c. If this assistance agreement is with a commercial organization, the following conditions shall be applicable:

(1) *Examination of costs*—The grantee shall maintain—and the CO or representatives of the CO shall have the right to examine and audit—books, records, documents, and other evidence and accounting procedures and practices, regardless of form (*e.g.*, machine readable medial such as disk, tape, etc.) or type (*e.g.*, data bases, applications software, data base management software, utilities, etc.), sufficient to reflect properly all costs claimed to have been incurred or anticipated to be incurred in performing this agreement. This right of examination shall include inspection at all reasonable times of the grantee's facilities, or parts of them, engaged in performing the agreement.

(2) *Reports*—If the grantee is required to furnish cost, funding, or performance reports, the CO or representatives of the CO shall have the right to examine and audit books, records, or other documents, and supporting materials, for the purpose of evaluating (a) the effectiveness of the grantee's policies and procedures to produce data compatible with the objectives of these reports and (b) the data reported.

(3) *Availability*—The grantee shall make available at its office at all reasonable times the materials described in paragraph (1) above, for examination, audit or reproduction, until the later of 3 years after final payment or any resulting final settlement of a termination, appeal, litigation or claim, or for any shorter period specified in FAR Subpart 4.7, Records Retention, or for any longer period required by statute.

(4) Except as otherwise provided in FAR Subpart 4.7, Records Retention, the grantee may transfer computer data in machine readable form from one reliable computer medium to another. The grantee's computer data retention and transfer procedures shall maintain the integrity, reliability, and security of the original data. The grantee's choice of form or type of materials described in paragraphs (1) and (2) of this clause affects neither the grantee's obligations nor the Government's rights under this clause.

(5) The grantee shall insert a clause containing all the terms of this paragraph c in all third-party contracts over $10,000 with commercial organizations under this agreement, altering the clause only as necessary to identify properly the parties and the CO under the NHTSA prime agreement.

4. *Standard Patent Rights* [The clause at 37 CFR Part 401.14(a), as modified below (or as further modified in accordance with the provisions of 37 CFR Part 401), shall be applicable to all assistance agreements involving the performance of research and development efforts by small business firms, non-profit organizations, State, local, and Federally-recognized Indian tribal governments, and unless otherwise provided, by other commercial organizations.]

The following modifications to the clause at 37 CFR Part 401.14(a) apply:

a. The parenthetical information shall be removed from the title of the clause;

b. The terms ''contract'' and ''contractor'' shall be replaced by the terms ''assistance agreement'' and ''grantee,'' respectively, as defined in these General Provisions (except that the grantee may modify these terms pursuant to paragraph (g)(1) of the clause for use in third-party contracts);

c. The terms ''agency,'' ''Federal agency,'' and ''funding Federal agency'' shall be replaced by the term ''NHTSA'' (excepted that the grantee may modify these terms pursuant to paragraph (g)(1) of the clause for use in third-party contracts);

d. The terms ''subcontract(s)'' and ''subcontractor'' shall be replaced by the terms ''third-party contract(s)'' and ''third-party contractor,'' respectively, as defined in these General Provisions;

e. The terms ''to be performed by a small business firm or domestic non-profit organization'' shall be deleted from paragraph (g)(1) of the clause;

f. The following subparagraph shall be added at the end of paragraph (f) of the clause;

(5) The grantee agrees to provide, upon request by the CO, periodic (but no more frequently than annual) listing of all subject inventions which were disclosed to NHTSA pursuant to paragraph (c)(1) and/or a report (DD Form 882) prior to the close-out of the assistance agreement listing all subject inventions or stating that there were none.

g. Paragraphs (g)(2) and (g)(3) of the clause shall be deleted; and

h. Paragraph (I) of the clause, entitled ''Communications,'' shall read as follows:

(I) *Communications* All notifications required by this clause shall be submitted to the NHTSA CO.

5. *Data Collection.* (Paperwork Reduction Act of 1980) [This clause shall be applicable to all assistance agreements involving the collection of information as defined in 5 CFR 1320.7]

a. OMB requires review and approval of plans and reports used to collect identical information from 10 or more persons (other than Federal employees) under assistance agreements sponsored by NHTSA. A collection of information undertaken by a grantee is considered to be ''sponsored'' by NHTSA only if:

(1) The grantee is collecting information at the specific request of NHTSA; or

(2) The terms and conditions of the agreement require specific approval by NHTSA of the collection of information or the collection procedures.

b. Unless otherwise specified, data collection conducted under the assistance agreement is the responsibility of the grantee, and NHTSA support of the effort does not constitute NHTSA approval of the survey design, questionnaire content, or data collection procedures. The grantee shall not represent to respondents that such data is being collected for, or in association with, NHTSA or any Federal agency without the specific written approval of such data collection plan or device by NHTSA. However, this requirement is not intended to preclude mention of NHTSA support of the effort in response to any inquiry or acknowledgement of such support in any publication of data.

6. *Protection of Individual Privacy.* [This clause shall be applicable to all assistance agreements under which the grantee, or its employees, or its third-party contractors, administrator any system of records on individuals on behalf of the Federal Government.]

a. *Privacy Act Notification.* The design, development, or operation of any system of records on individuals to accomplish a Government function is subject to the Privacy Act 1974, Public Law 93–579, December 31, 1974 (5 U.S.C. 552a) and applicable regulations. Violations. Violation of the Act may involve the imposition of criminal penalties.

b. The grantee agrees to:

(1) Comply with the Privacy Act of 1974 (the Act), and rules and regulations issued pursuant to the Act when performance under this agreement involves the design, development, or operation of any system of records on individuals to be operated by the grantee, its employees, or its third party contractors to accomplish a Government function.

(2) Notify the NHTSA CO when the grantee anticipates operating a system of records on individuals on behalf of the Government in order to accomplish the requirements of this agreement, if such system contains information about individuals which will be retrieved by the individuals name or other particular identifier assigned to the individual. A system on individuals subject to the Act may not employed in the performance of this agreement until the necessary approval and publication requirements applicable to the system have been carried out. The grantee agrees to collect, maintain, disseminate, and use such records in accordance with the requirements of the Act, and comply with all applicable requirements of the Act.

(3) Include the Privacy Act Notification contained in this agreement in every solicitation and in every resulting third-party contract and in every third-party contract awarded without a solicitation, when the performance of work under the third-party contract requires the design, development operation of a system of records on individuals that is subject to the Act.

(4) Include this clause b. including this paragraph, in all third-party contracts under this agreement that requires the design, development, or operation of a system of records on individuals that is subject to the Act.

c. For the purposes of the Privacy Act, when the agreement involves the design, development, or operation of a system of records on individuals to accomplish a Government function, the grantee, its employees, and its third party contractors are considered to be employees of the government respect to the Government function, and the requirements of the Act, including civil and criminal penalties for violation of the Act, are applicable. In addition, failure to comply with the provisions of the Act or of this clause will make this agreement subject to termination.

d. The terms used in this clause have the following meanings:

(1) ''Operation of a system of records'' means performance of any of the activities associated with maintaining the system of records on behalf of the Government, including the collection, use, and dissemination of records.

(2) ''Record'' means any item, collection or grouping of information about an individual that is maintained by the grantee on behalf of the Government including, but not limited to, education, financial transactions, medical history, and criminal or employment history and that contains the person's name, or the identifying number, symbol, or other identifying particular assigned to the individual, such as a fingerprint or voiceprint or photograph.

(3) ''System of records on individuals'' means a group of any records under the control of the grantee on behalf of the Government from which information is retrieved by the name of the individual or by some indemnifying number, symbol, or other particular assigned to that individual.

7. *Rights in Data.* [This clause is applicable in its entirety to all assistance agreements and third-party contracts, except those involving State local, and Federally-recognized Indian tribal governments, tribal governments, for which this clause applies only where not inconsistent with 49 CFR 18.34, and Nonprofit Organizations, for which this clause applies only where not inconsistent with 49 CFR 19.36.]

a. *Definitions.*

(1) ''Computer software,'' as used in this clause, means computer programs, computer, computer databases, and documentation thereof.

(2) ''Data'' as used in this clause, means recorded information, regardless of form or the media on which it may be recorded. The term includes technical and computer software. The term does not include information incidentenal to agreement administration, such as financial, administrative, cost or pricing, or management information.

(3) ''Form, fit, and function data,'' as used in this data relating to items, components, or processes that are sufficient to enable physical and functional interchangeably, as well as data identifying source, size, configuration, mating, and attachment characteristics, functional characteristics, and performance requirements; except that for computer software it means data identifying source, functional characteristics, and performance specifications, but specifically excludes the source code, algorithm, process, formulae, and flowcharts of the software.

(4) ''Limited Rights,'' as used in this clause, means the rights of the Government limited rights data as set forth in the Limited Rights Notice of subparagraph g(2).

(5) ''Limited rights data,'' as used in this clause, means data (other than computer software) that embody trade secrets or are commercial or financial and confidential or privileged, but only to the extent that the data pertains to items, components, or processes developed at private expense, including minor modifications thereof.

(6) ''Restricted computer software,'' as used in this clause, means computer software developed at private expense and that is a trade secret; is commercial or financial and is confidential or privileged; or is published copyrighted computer software; including minor modifications of such computer software.

(7) ''Restricted rights,'' as used in this clause, means the rights of the Government in restricted computer software, as set forth in a Restricted Rights Notice of subparagraph g(3), or as otherwise may be provided in a collateral agreement incorporated in and made part of this agreement, including minor modifications of such computer software.

(8) ''Technical data,'' as used in this clause, means data (other than computer software), which are of scientific or technical nature.

(9) ''Unlimited rights,'' as used in this clause, means the right of the Government to use, disclose, reproduce, prepare derivative

works, distribute copies to the public, and perform publicity and display publicity, in any manner and for any purpose, and to have or permit others to do so.

b. *Allocation of rights.*

(1) Except as provided in paragraph c of this clause regarding copyright, the Government shall have unlimited rights in—

(i) Data first produced in the performance of this agreement;

(ii) Form, fit, and function data delivered under this agreement;

(iii) Data delivered under this agreement (except for restricted computer software) that constitutes manuals or instructional and training material for installation, operation, or routine maintenance and repair of items, components, or processes delivered or otherwise furnished for use under this agreement, and

(iv) All other data delivered under this agreement unless provided otherwise for limited rights data or restricted computer software in accordance with paragraph of this clause.

(2) The grantee shall have the right to—

(i) Use, release to others, reproduce, distribute, or publish any data first produced or specifically used by the grantee in the performance agreement unless provided otherwise in paragraph (d) of this clause;

(ii) Protect from unauthorized disclosure and use those data which are limited rights data or restricted computer software to the extent provided in paragraph g of this clause;

(iii) Substantiate use of, add or correct limited rights, restricted rights or copyright notices and to take other appropriate action, in accordance with paragraph e and f of this clause; and

(iv) Establish claim to copyright sustaining and first produced in the performance of this contract to the extent provided in subparagraph c(1) of this clause.

c. *Copyright.*

(1) *Data first produced in the performance of this agreement.* Unless provided otherwise in paragraph d of this clause, the grantee may establish, without prior approval of the CO, claim to copyright subsisting in scientific and technical articles based upon or containing any data first produced in the performance of this agreement and published in academic, technical or professional journals, symposia proceedings or similar works. The prior, express written permission of the agreement of the CO is required to establish claim to copyright subsisting in all other data first produced in the performance of this agreement. When claim to copyright subsisting in all other data first produced in the performance of this agreement. When claim to copyright is made, the grantee shall affix the applicable copyrights notices of 17 U.S.C 401 or 402 and acknowledgment of Government sponsorship (including agreement number) to the data when such data are delivered to the Government, as well as when the data are published or deposited for registration as a published work in the U.S. Copyright Office.

For data other than computer software the grantee grants to the Government, and others acting on its behalf, a paid-up, nonexclusive, irrevocable worldwide license in such copyrighted data to reproduce, prepare derivative works, distribute copies to the public, and perform publicity and display publicity, by or on behalf of the Government. For computer software, the grantee grants to the Government and others acting in its behalf, a paid-up, nonexclusive, irrevocable worldwide license in such copyrighted computer software to reproduce, prepare derivative works, and perform publicity and display publicity, by or on its behalf of the Government.

(2) *Data not first produced in the performance of this agreement.* The grantee shall not, without prior written permission of the CO, incorporate in data delivered under this agreement any data not in first produced in the performance of this agreement and which contains the copyright notice of 17 U.S.C. 401 or 402 unless the grantee identifies such data and grants to the Government, or acquires on its behalf, a license of the same scope as set forth in subparagraph c(1) of this clause, provided, however, that if such data are computer software Government shall acquire a copyright license as set forth in subparagraph g(3) of this clause or as otherwise may be provided in a collateral agreement incorporated in or made part of this agreement.

(3) *Removal of copyright notices.* The Government agrees not to remove any copyright notices placed on data pursuant to this paragraph c, and to include such notices on all reproduction of the data.

d. *Release, Publication and use of data.*

(1) The grantee shall have the right to use, release to others, reproduce, distribute, or publish any data first produced or specifically used by the grantee in the performance of this agreement, except to the extent that such data may be subject to the Federal export control or national security laws or regulations, or unless otherwise provided in this paragraph of this clause or expressly set forth in this agreement.

(2) The grantee agrees that to the extent it receives or is given access to data necessary for the performance of this agreement which contains restrictive markings, the grantee shall treat the data in accordance with such markings unless otherwise specifically authorized in writing by the CO.

e. *Unauthorized markings of data.*

(1) Notwithstanding any other provisions of this agreement concerning inspection or acceptance, if any data delivered under this agreement are marked with the notices specified in subparagraph g(2) or g(3) of this clause and use of such is not authorized by this clause, or if such data bears any other restrictive or limiting markings not authorized by this agreement, the CO may at anytime either return the data to the grantee, or cancel or ignore the markings. However, the following procedures shall apply prior to canceling or ignoring the markings:

(i) The CO shall make written inquiry to the grantee affording the grantee 30 days from receipt of the inquiry to provide written justification to substantiate the propriety of the markings;

(ii) The grantee fails to respond or fails to provide written justification to substantiate the property markings within the 30-day period (or a longer time not exceeding 90 days approved in writing by the CO for good cause shown), the Government shall have the right to cancel or ignore the markings at any time after the said period and the data will no longer be made subject to any disclosure prohibitions.

(iii) If the grantee provides written justification to substantiate the propriety of the markings within the period set in subdivision e(1)(i) of this clause, the CO shall consider such written justification and determine whether or not the markings are to be canceled or ignored. If the CO determines that the markings are authorized, the grantee shall be so notified in writing. If the CO determines, with concurrence of the head of the contracting activity, that the markings are not authorized, the CO shall furnish the grantee a written determination, which determination shall become the final agency decision regarding the appropriateness of the markings unless the grantee files suit in a court of contempt jurisdiction within 90 days of receipt of the CO's decision. The Government shall continue to abide by the markings under this subdivision e(1)(iii) until final resolution of the matter either by the CO's determination becoming final (in which instance the Government shall thereafter have the right to cancel or ignore the marking at any time and the data will no longer be made subject to any disclosure prohibitions) or by final disposition of the matter by court decision if suit is filed.

(2) The time limits in the procedures set forth in subparagraph e(1) of this clause may be modified in accordance with regulations implementing the Freedom of Information Act (5 U.S.C. 552) if necessary to respond to a request hereunder.

f. *Omitted or incorrect markings.*

(1) Data delivered to the Government without either the limited rights or restricted rights notice as authorized by paragraph g of this clause, or the copyright notice required by paragraph c of this clause, shall be deemed to have been furnished with unlimited rights, and the Government assumes no liability for the disclosure, use, or reproduction of such data. However, to the extent the data has not been disclosed without restriction outside the Government, the grantee may request, within 6 months (or longer time approved by the CO for good cause shown) after delivery of such data; permission to have notices placed on qualifying data, at the greater grantee's expense, and the CO may agree to do so if the grantee—

(i) Identifies the data to which the omitted notice is to be applied;

(ii) Demonstrates that the omission of the notice was inadvertent;

(iii) Establishes that the use of the proposed notice is authorized; and

(iv) Acknowledges that the Government has no liability respect to the disclosure or use of any such data made prior to the addition of the notice or resulting from the omission of the notice.

(2) The CO may also (i) permit correction at the grantee's expense, of incorrect notices if the grantee identifies the data on which correction of the notice is to be made, and demonstrates that the correct notice is authorized, or (ii) correct any incorrect notices.

g. *Protection of limited rights data and restricted computer software.*

(1) When data other than that listed in subdivision b(1)(i), (ii) and (iii) of this clause are specified to be delivered under this agreement and qualify as either limited rights data or restricted computer software, if the grantee desires to continue protection of such data, the grantee shall withhold such data and not furnish them to the Government under this agreement. As a condition to this withholding the grantee shall identify the data being withheld and furnish form, fit, and function data in lieu thereof. Limited rights data that is formatted as a computer database for delivery to the Government are to be treated as limited rights data and not restricted computer software.

(2) Notwithstanding subparagraph g(1) of this clause, the agreement may identify and specify the delivery of limited rights data, or the CO may require by written request the delivery of limited rights data that has been withheld or would otherwise be withholdable. If delivery of such data is so required, the grantee may affix the following ''Limited Rights Notice'' to the data and the Government will thereafter treat the data, subject to the provisions of paragraph e and f of this clause, in accordance with such Notice:

Limited Rights Notice

(a) These data are submitted with limited rights under NHTSA Agreement No. _____.

These data may be reproduced and used by the Government with the express limitation that they will not, without written permission of the grantee, be used for purpose of manufacture or disclosed outside the Government; except that the Government may disclose these data outside the Government for the following purposes, if any, provided that the Government makes such disclosure subject to prohibition against further use and disclosure:

(i) Use (except for manufacture) by support service contractors.

(ii) Evaluation by nongovernmental evaluators.

(iii) Use (except for manufactures) by other grantees or contractors participating in the Government's program of which the agreement is a part, for information and use in connection with the effort of work performed under each agreement or contract.

(iv) Release to a foreign government, or instrumentality thereof, as the interests of the United States may require, for information or evaluation by such government.

b. This Notice shall be marked on any reproduction of these data in whole or in part.

(End of notice)

(3)(i) Notwithstanding subparagraph g(1) of this clause, the agreement may identify and specify the delivery of restricted computer software, or the CO may require by written request the delivery of restricted computer software that has been withheld or would otherwise be withheld. If delivery of such computer software is so required, the grantee may affix the following ''Restricted Rights Notice'' to the computer software and the Government will thereafter treat the computer software, subject to paragraphs e and f of this clause, in accordance with the Notice:

Restricted Rights Notice

(a) This computer software is submitted with restricted rights under NHTSA Agreement No. _____. It may not be used, reproduced, or disclosed by the Government except as provided in a paragraph (b) of this Notice or as otherwise expressly stated in the agreement.

(b) This computer software may be—

(1) Used or copied for use in or with the computer for which it was acquired, including use at any Government installation to which such computer or computers may be transferred;

(2) Use or copied for use in a backup computer if any computer for which it was acquired is non-operative;

(3) Reproduced for safekeeping (archives) or backup purposes;

(4) Modified, adapted, or combined with other computer software, provided that the modified, combined, or adapted portions of the derivative software incorporating restricted computer software are made subject to the same restricted rights; and

(5) Disclosed to and reproduced for use by support service contractors in accordance with subparagraphs (b)(1) through (4) of this clause, provided the Government makes such disclosure or reproduction subject to these restricted rights; and

(6) Used or copied for use in or transferred to a replacement computer.

(c) Notwithstanding the foregoing, if this computer software is published copyrighted computer software, it is licensed to the Government, without disclosure prohibitions, with the minimum rights set forth in paragraph (b) of this clause.

(d) Any other rights or limitations regarding the use, duplication, or disclosure of this computer software are to be expressly stated in, or incorporated in the agreement.

e. This Notice shall be marked on any reproduction software, in whole or in part.

(End of notice)

(3)(ii) Where it is impractical to include the Restricted Rights Notice on restricted computer software, the following short-form Notice may be used in lieu thereof:

Restricted Rights Notice—Short Form

Use, reproduction, or disclosure is subject to restrictions set forth in NHTSA Agreement No. _____ with (name of Grantee).

(End of notice)

(3)(iii) If restricted computer software is delivered with the copyright notice of 17 U.S.C. 401, it will be presumed to be published copyrighted computer software licensed to the Government without disclosure prohibitions, with the minimum rights set forth in paragraph b of this clause, unless the grantee includes the following statement with such copyright notice: ''Unpublished—rights reserved under the Copyright Laws of the United States.''

h. *Third Party Contracts.* The grantee has the responsibility to obtain from its third-party contractors all data and rights therein necessary to fulfill the grantee's obligations to the Government under this agreement. If a third-party contractor refuses to accept terms affording the Government such rights, the grantee shall promptly bring such refusal to the attention of the CO and not proceed with the third-party contract award without further authorization.

i. *Relationship to patents.* Nothing contained in this clause shall imply a license to the Government under any patent or be construed as affecting the scope of any license or other right otherwise granted to the Government.

8. *Restrictions on Printing.*

a. Governments Printing and Binding Regulations are published by the Joint Committee on Printing, Congress of the United States. These regulations are applicable to NHTSA when NHTSA bears the entire cost of printing of materials exclusively for its own use.

b. This assistance agreement is not made primarily or substantially for the purpose of typesetting or having material printed for NHTSA use.

c. The grantee may reproduce reports, data, or otherwise written material requires under the terms of the agreement for the use of NHTSA, provided that the material duplicated does not exceed 5,000 units of only one page, or that the items consisting of multiple pages do not exceed 25,000 units in the aggregate. Grantees must advise the CO if the estimated quantities will exceed these ceilings so that Department/Committee approval can be obtained.

d. These restrictions do not preclude the writing, editing, preparation of manuscript copy and related illustrations material, or the publication of findings by grantees; or the administrative printing requirements of the grantee required for its own use to respond to the terms of the agreement.

9. *Other Administrative Provisions and Assurances.*

a. *No Government Obligations to Third Parties.* Absent its specific consent, the NHTSA shall not be subject to any obligations or liabilities with respect to any person or entity not a party to this agreement in connection with performance under the agreement, notwithstanding its occurrence in or approval of the solicitation or award of any third-party contract.

b. *Severability.* If any provisions of this agreement are held invalid, the remainder of this agreement shall not be affected thereby if such remainder would then continue to conform to the terms and requirements of applicable law.

c. The grantee assures and certifies that no member of or delegate to Congress, or resident Commissioner, will be admitted to any share or part of this assistance agreement, or to any benefit arising from it. And further, it shall comply with the provisions of 18 U.S.C. 1913 which prohibits the direct or indirect use of any funds appropriated by Congress to pay for any personal service, advertisement, telegram, telephone, letter, printed or written matter, or any other device intended or designed to influence a member of Congress, to favor or oppose, any legislation or appropriation, whether before or after the introduction of any bill or resolution proposing such legislation or appropriation.

d. The grantee warrants that it has not paid and agrees not to pay any bonus, commission or fee for the purpose of obtaining approval of its application for the financial assistance agreement.

e. The grantee assures that it shall comply with all applicable provisions of Federal, State and local law. Nothing in this agreement shall require the grantee to observe or enforce compliance with any provision hereof, perform any other act or do any other thing in contravention of applicable State or territorial law; provided that if any of provisions of the agreement would require the grantee to violate any applicable State or territorial law, the grantee will at once notify the CO in writing in order that appropriate modifications may be made to the agreement to remedy the violation.

All limits and standards set forth in this agreement are minimum requirements, and shall not affect the application of more stringent State or local standards, provided however, that in its procurement actions under this agreement, the grantee shall not give any preference to or discriminate against goods and services produced or manufactured in any country, State or other geographical area, except as provided in paragraph f below.

f. The grantee assures and certifies that all manufactured products, steel, and cement used in carrying out this agreement are produced in the United States, in accordance with Section 165 of the Surface Transportation Assistance Act of 1982 (Pub. L. 97–424; 96 Stat. 2097) unless the Secretary of DOT has determined under Section 165 that it is appropriate to waive this requirement.

10. *Order of Precedence.*

In the event of any inconsistency between any provisions of this agreement, the following order of precedence shall apply:

a. Statement of Purpose (excluding the grantee's proposal, if incorporated).

b. Special provisions contained in the assistance agreement.

c. General Provisions, whether referenced or stated in full text, contained herein.

d. The grantee's proposal (if incorporated).

[FR Doc. 04–26986 Filed 12–7–04; 8:45 am]

BILLING CODE 4910–59–P

DEPARTMENT OF TRANSPORTATION

National Highway Traffic Safety Administration

[Docket No. NHTSA–2004–19738]

Decision That Certain Nonconforming Motor Vehicles Are Eligible for Importation

AGENCY: National Highway Traffic Safety Administration (NHTSA), DOT.

ACTION: Notice of decision by NHTSA that certain nonconforming motor vehicles are eligible for importation.

SUMMARY: This document announces decisions by NHTSA that certain motor vehicles not originally manufactured to comply with all applicable Federal motor vehicle safety standards are eligible for importation into the United States because they are substantially similar to vehicles originally manufactured for importation into and/or sale in the United States and certified by their manufacturers as complying with the safety standards, and they are capable of being readily altered to conform to the standards.

DATES: These decisions became effective on the dates specified in Annex A.

FOR FURTHER INFORMATION CONTACT: Coleman Sachs, Office of Vehicle Safety Compliance, NHTSA ((202) 366–3151).

SUPPLEMENTARY INFORMATION:

Background

Under 49 U.S.C. 30141(a)(1)(A), a motor vehicle that was not originally manufactured to conform to all applicable Federal motor vehicle safety standards shall be refused admission into the United States unless NHTSA has decided that the motor vehicle is substantially similar to a motor vehicle originally manufactured for importation into and sale in the United States, certified under 49 U.S.C. 30115, and of the same model year as the model of the motor vehicle to be compared, and is capable of being readily altered to conform to all applicable Federal motor vehicle safety standards.

Petitions for eligibility decisions may be submitted by either manufacturers or importers who have registered with NHTSA pursuant to 49 CFR part 592. As specified in 49 CFR 593.7, NHTSA publishes notice in the **Federal Register** of each petition that it receives, and affords interested persons an opportunity to comment on the petition. At the close of the comment period, NHTSA decides, on the basis of the petition and any comments that it has received, whether the vehicle is eligible for importation. The agency then publishes this decision in the **Federal Register**.

NHTSA received petitions from registered importers to decide whether the vehicles listed in Annex A to this notice are eligible for importation into the United States. To afford an opportunity for public comment, NHTSA published notice of these petitions as specified in Annex A. The reader is referred to those notices for a thorough description of the petitions. No substantive comments were received in response to these notices. Based on its review of the information submitted by the petitioners, NHTSA has decided to grant the petitions.

Vehicle Eligibility Number for Subject Vehicles

The importer of a vehicle admissible under any final decision must indicate on the form HS–7 accompanying entry the appropriate vehicle eligibility number indicating that the vehicle is eligible for entry. Vehicle eligibility numbers assigned to vehicles admissible under this decision are specified in Annex A.

Final Decision

Accordingly, on the basis of the foregoing, NHTSA has decided that each motor vehicle listed in Annex A to this notice, which was not originally manufactured to comply with all applicable Federal motor vehicle safety standards, is substantially similar to a motor vehicle manufactured for importation into and/or sale in the United States, and certified under 49 U.S.C. 30115, as specified in Annex A, and is capable of being readily altered to conform to all applicable Federal motor vehicle safety standards.

Authority: 49 U.S.C. 30141(a)(1)(A) and (b)(1); 49 CFR 593.8; delegations of authority at 49 CFR 1.50 and 501.8.

Claude H. Harris,

Director, Office of Vehicle Safety Compliance.

Annex A—Nonconforming Motor Vehicles Decided To Be Eligible for Importation

1. Docket No. NHTSA–2004–17647

Nonconforming Vehicles: 2001–2002 Mercedes Benz C–320 (203) Passenger Cars.
Substantially Similar U.S.-Certified Vehicles: 2001–2002 Mercedes Benz C–320 (203) Passenger Cars.
Notice of Petition Published at: 69 FR 24705 (May 4, 2004).
Vehicle Eligibility Number: VSP–441 (effective date June 15, 2004).

2. Docket No. NHTSA–2004–17766

Nonconforming Vehicles: 2002–2004 Mercedes Benz S–Class (220) Passenger Cars.
Substantially Similar U.S.-Certified Vehicles: 2002–2004 Mercedes Benz S–Class (220) Passenger Cars.
Notice of Petition Published at: 69 FR 29164 (May 20, 2004).
Vehicle Eligibility Number: VSP–442 (effective date June 28, 2004).

3. Docket No. NHTSA–2004–18610

Nonconforming Vehicles: 1999 Cagiva Gran Canyon 900 Motorcycles.
Substantially Similar U.S.-Certified Vehicles: 1999 Cagiva Gran Canyon 900 Motorcycles.
Notice of Petition Published at: 69 FR 45110 (July 28, 2004).
Vehicle Eligibility Number: VSP–444 (effective date September 2, 2004).

4. Docket No. NHTSA–2004–18647

Nonconforming Vehicles: 2004 Ferrari 360 Series Passenger Cars.

Substantially Similar U.S.-Certified Vehicles: 2004 360 Ferrari Series Passenger Cars.
Notice of Petition Published at: 69 FR 51143 (August 17, 2004).
Vehicle Eligibility Number: VSP–446 (effective date September 24, 2004).

5. Docket No. NHTSA–2004–18782

Nonconforming Vehicles: 2002 Honda CR–V Multipurpose Passenger Vehicles.
Substantially Similar U.S.-Certified Vehicles: 2002 Honda CR–V Multipurpose Passenger Vehicles.
Notice of Petition Published at: 69 FR 52744 (August 27, 2004).
Vehicle Eligibility Number: VSP–447 (effective date October 5, 2004).

6. Docket No. NHTSA–2004–18945

Nonconforming Vehicles: 2000 Cadillac Deville Passenger Cars (Manufactured 8/1/1999–12/31/2000).
Substantially Similar U.S.-Certified Vehicles: 2000 Cadillac Deville Passenger Cars (Manufactured 8/1/1999–12/31/2000).
Notice of Petition Published at: 69 FR 54342 (September 8, 2004).
Vehicle Eligibility Number: VSP–448 (effective date October 14, 2004).

7. Docket No. NHTSA–2004–18946

Nonconforming Vehicles: 1998 Toyota 4-Runner Multipurpose Passenger Vehicles.
Substantially Similar U.S.-Certified Vehicles: 1998 Toyota 4-Runner Multipurpose Passenger Vehicles.
Notice of Petition Published at: 69 FR 54344 (September 8, 2004).
Vehicle Eligibility Number: VSP–449 (effective date October 14, 2004).

8. Docket No. NHTSA–2004–18947

Nonconforming Vehicles: 2003–2004 BMW 5 Series Passenger Vehicles.
Substantially Similar U.S.-Certified Vehicles: 2003–2004 BMW 5 Series Passenger Vehicles.
Notice of Petition Published at: 69 FR 54717 (September 9, 2004).
Vehicle Eligibility Number: VSP–450 (effective date October 14, 2004).

9. Docket No. NHTSA–2004–18849

Nonconforming Vehicles: 1994–1997 Honda Accord, Sedan & Wagon, right hand drive (RHD) Passenger Cars.
Substantially Similar U.S.-Certified Vehicles: 1994–1997 Honda Accord, Sedan & Wagon, left hand drive (LHD) Passenger Cars.
Notice of Petition Published at: 69 FR 49944 (August 12, 2004).
Vehicle Eligibility Number: VSP–451 (effective date October 29, 2004).

10. Docket No. NHTSA–2004–19120

Nonconforming Vehicles: 2001 Ducati 900 Motorcycles.
Substantially Similar U.S.-Certified Vehicles: 2001 Ducati 900 Motorcycles.
Notice of Petition Published at: 69 FR 57132 (September 23, 2004).
Vehicle Eligibility Number: VSP–452 (effective date October 29, 2004).

11. Docket No. NHTSA–2004–19121

Nonconforming Vehicles: 2000 BMW R1150 GS Motorcycles.
Substantially Similar U.S.-Certified Vehicles: 2000 BMW R1150 GS Motorcycles.
Notice of Petition Published at: 69 FR 57133 (September 23, 2004).
Vehicle Eligibility Number: VSP–453 (effective date October 29, 2004).

12. Docket No. NHTSA–2004–19291

Nonconforming Vehicles: 1993 Mercedes Benz 190E Passenger Cars.
Substantially Similar U.S.-Certified Vehicles: 1993 Mercedes Benz 190E Passenger Cars.
Notice of Petition Published at: 69 FR 60931 (October 13, 2004).
Vehicle Eligibility Number: VSP–454 (effective date November 15, 2004).

13. Docket No. NHTSA–2004–19290

Nonconforming Vehicles: 2004 Rolls Royce Phantom Passenger Cars.
Substantially Similar U.S.-Certified Vehicles: 2004 Rolls Royce Phantom Passenger Cars.
Notice of Petition Published at: 69 FR 60932 (October 13, 2004).
Vehicle Eligibility Number: VSP–455 (effective date November 17, 2004).

[FR Doc. 04–26984 Filed 12–7–04; 8:45 am]
BILLING CODE 4910–59–P

DEPARTMENT OF TRANSPORTATION

National Highway Traffic Safety Administration

[Docket No. NHTSA–2004–19122]

Re-Opening of Comment Period on Whether Nonconforming 2004 Lamborghini Gallardo Passenger Cars Are Eligible for Importation

AGENCY: National Highway Traffic Safety Administration (NHTSA), DOT.

ACTION: Re-opening of comment period.

SUMMARY: This document announces the reopening of the comment period on a petition for NHTSA to decide that 2004 Lamborghini Gallardo passenger cars that were not originally manufactured to comply with all applicable Federal motor vehicle safety standards are eligible for importation into the United States.

DATES: The closing date for comments on the petition is December 13, 2004.

ADDRESSES: Comments are to be submitted to: Docket Management, Room PL–401, 400 Seventh Street, SW., Washington, DC 20590. (Docket hours are from 9 a.m. to 5 p.m.) Anyone is able to search the electronic form of all comments received into any of our dockets by the name of the individual submitting the document (or signing the comment, if submitted on behalf of an association, business, labor union, etc.). You may review DOT's complete Privacy Act Statement in the **Federal Register** published on April 11, 2000 (Volume 65, Number 70; Pages 19477–787), or you may visit *http://dms.dot.gov.*

FOR FURTHER INFORMATION CONTACT: Coleman Sachs, Office of Vehicle Safety Compliance, NHTSA (202) 366–3151).

SUPPLEMENTARY INFORMATION: On October 13, 2004, NHTSA published a notice (at 69 FR 60933) that it had received a petition to decide that nonconforming 2004 Lamborghini Gallardo passenger cars are eligible for importation into the United States. The notice solicited public comments on the petition and stated that the closing date for comments is November 12, 2004.

This is to notify the public that NHTSA is reopening the comment period on this petition, and allowing it to run until December 13, 2004. This reopening is based on a request dated November 4, 2004, from Michael J. Grossman, the designated North American agent for Automobili Lamborghini, S.p.A.(''Lamborghini''), the vehicle's manufacturer. Mr. Grossman stated that an extension of the comment period was needed because prior business commitments precluded him from completing his analysis of the petition and preparing comments thereon by the November 12 deadline. Characterizing the petition as raising potentially complex technical and regulatory issues, and citing the unavailability of other company personnel who could prepare comments on the petition, Mr. Grossman asserted that Lamborghini would be unable to submit its comments before the closing date specified in the notice of petition.

NHTSA has decided to grant Lamborghini's request.

All comments received before the close of business on the closing date indicated above will be considered, and will be available for examination in the docket at the above address both before and after that date. To the extent possible, comments filed after the closing date will also be considered. Notice of final action on the petition will be published in the **Federal Register** pursuant to the authority indicated below.

Authority: 49 U.S.C. 30141(a)(1)(B) and (b)(1); 49 CFR 593.8; delegations of authority at 49 CFR 1.50 and 501.8.

Claude H. Harris,

Director, Office of Vehicle Safety Compliance.

[FR Doc. 04–26985 Filed 12–7–04; 8:45 am]
BILLING CODE 4910–59–P

DEPARTMENT OF TRANSPORTATION

Research and Special Programs Administration

Office of Hazardous Materials Safety; Notice of Delays in Processing of Exemption Applications

AGENCY: Research and Special Programs Administration, DOT.

ACTION: List of application delayed more than 180 days.

SUMMARY: In accordance with the requirements of 49 U.S.C. 5117(c), RSPA is publishing the following list of exemption applications that have been in process for 180 days or more. The reason(s) for delay and the expected completion date for action on each application is provided in association with each identified application.

FOR FURTHER INFORMATION CONTACT: Delmer Billings, Office of Hazardous Materials Exemptions and Approvals, Research and Special Programs Administration, U.S. Department of Transportation, 400 Seventh Street, SW., Washington, DC 20590–0001, (202) 366–4535.

Key to "Reason for Delay"

1. Awaiting additional information from applicant.
2. Extensive public comment under review.
3. Application is technically complex and is of significant impact or precedent-setting and requires extensive analysis.
4. Staff review delayed by other priority issues or volume of exemption applications.

Meaning of Application Number Suffixes

N—New application.

M—Modification request.

PM—Party to application with modification request.

Issued in Washington, DC, on December 1, 2004.

R. Ryan Posten,

Exemptions Program Officer, Office of Hazardous Materials Safety Exemptions & Approvals.

Application No.	Applicant	Reason for delay	Estimated date of completion
	New Exemption Applications		
11927–N	Alaska Marine Lines, Inc., Seattle, WA	4	12–31–2004
12381–N	Ideal Chemical & Supply Co., Memphis, TN	2	01–31–2005
12412–N	Great Western Chemical Company, Portland, OR	3	01–31–2005
12751–N	Defense Technology Corporation, Casper, WY	4	12–31–2004
12950–N	Walnut Industries, Inc., Bensalem, PA	4	01–31–2005
13054–N	CHS Transportation, Mason City, IA	4	12–31–2004
13176–N	Union Pacific Railroad Company, Omaha, NE	4	01–31–2005
12949–N	Railway Progress Institute, Inc., Alexandria, VA	4	01–31–2005
13281–N	The Dow Chemical Company, Midland, MI	4	01–31–2005
13347–N	ShipMate, Inc., Torrance, CA	4	12–31–2004
13341–N	National Propane Gas Association, Washington, DC	1	12–31–2004
13302–N	FIBA Technologies, Inc., Westboro, MA	4	12–31–2004
13314–N	Sunoco Inc., Philadelphia, PA	4	01–31–2005
13309–N	OPW Engineered Systems, Lebanon, OH	4	01–31–2005
13295–N	Taylor-Wharton, Harrisburg, PA	1	12–31–2004
13266–N	Luxfer Gas Cylinders, Riverside, CA	1	12–31–2004
13265–N	Aeropress Corporation, Shreveport, LA	4	12–31–2004
13228–N	AirSep Creekside Corp., Buffalo, NY	4	12–31–2004
13563–N	Applied Companies, Valencia, CA	4	01–31–2005
13560–N	Texaco Ovonic Hydrogen Systems L.L.C. (TOHS), Rochester Hills, MI	4	12–31–2004
13554–N	The Fertilizer Institute, Washington, DC	4	12–31–2004
13547–N	CP Industries, McKeesport, PA	4	01–31–2005
13484–N	Air Liquide America, L.P., Houston, TX	4	12–31–2004
13482–N	U.S. Vanadium Corporation (Subsidiary of Straegic Minerals Corporation), Niagara Falls, NY.	4	12–31–2004
13443–N	Koch Materials Company, Wichita, KS	4	12–31–2004
13461–N	FIBA Technologies, Inc., Westboro, MA	4	12–31–2004
13346–N	Stand-By-Systems, Inc., Dallas, TX	1	12–31–2004
13585–N	Texaco Ovonic Hydrogen Systems, L.L.C., Rochester Hills, MI	4	12–31–2004
13582–N	Linde Gas LLC (Linde), Independence, OH	4	01–31–2005
13422–N	Puritan Bennett, Plainfield, IN	3	12–31–2004
13188–N	General Dynamics, Lincoln, NE	1	12–31–2004
13183–N	Becton Dickinson, Sandy, UT	4	12–31–2004
13077–N	MacIntyre, Middlebury, VT	4	01–31–2005
12797–N	Environmental Quality Co., Belleville, MI	4	01–31–2005
	Modification to Exemptions		
11769–M	Great Western Chemical Company, Portland, OR	2	01–31–2005
12065–M	Petrolab Company, Latham, NY	4	12–31–2004
10019–M	Structural Composites Industries, Pomona, CA	3	12–31–2004
11241–M	Rohm and Haas Co., Philadelphia, PA	1	01–31–2005
11537–M	Hawkins, Inc., Minneapolis, MN	2	01–31–2005
7280–M	Department of Defense, Ft. Eustis, VA	4	12–31–2004
10915–M	Luxfer Gas Cylinders (Composite Cylinder Division), Riverside, CA	1	01–31–2005
10878–M	Tankcon FRP Inc., Boisbriand, Qc	1, 3	01–31–2005
9421–M	Taylor-Wharton (Gas & Fluid Control Group), Harrisburg, PA	4	12–31–2004
12022–M	Taylor–Wharton (Gas & Fluid Control Group), Harrsburg, PA	4	12–31–2004
11537–M	Interstate Chemical Company, Inc., Hermitage, PA	2	01–31–2005

Application No.	Applicant	Reason for delay	Estimated date of completion
10882–M	Espar Products, Inc., Mississauga, Ontario, Canada	4	01–31–2005
13027–M	Hernco Fabrication & Services, Midland, TX	4	01–31–2005
11579–M	Dyno Nobel, Inc., Salt Lake City, UT	4	01–31–2005
11537–M	American Development Corporation, Vanceboro, NC	3	01–31–2005
8718–M	Structural Composites Industries, Pomona, CA	3	12–31–2004
8162–M	Structural Composites Industries, Pomona, CA	3	12–31–2004
7277–M	Structural Composites Industries, Pomona, CA	3	12–31–2004
7060–M	Federal Express, Memphis, TN	4	12–31–2004
11769–M	Great Western Chemical Company, Portland, OR	2	01–31–2005
11537–M	JCI Jones Chemicals, Inc., Milford, VA	2	01–31–2005
11769–M	Hydrite Chemical Company, Brookfield, WI	2	01–31–2005

[FR Doc. 04–26866 Filed 12–7–04; 8:45 am]

BILLING CODE 4910–60–M

DEPARTMENT OF TRANSPORTATION

Surface Transportation Board

[STB Finance Docket No. 34531][1]

The Indiana Rail Road Company—Acquisition Exemption—Line of Monon Rail Preservation Corporation

The Indiana Rail Road Company (INRD), a Class III rail carrier, has filed a verified notice of exemption under 49 CFR 1150.45 to acquire from Monon Rail Preservation Corporation (Monon), approximately 3.98 miles of rail line between milepost Q217.67 at Hunters, IN, and milepost Q213.69 at Ellettsville, IN, in Monroe County, IN.[2] In 2001, INRD entered into an operating agreement with Monon, whereby INRD became the operator of the line.[3]

INRD indicates that the parties would like to consummate the transaction on or shortly after December 6, 2004.

If the notice contains false or misleading information, the exemption is void *ab initio*. Petitions to revoke the exemption under 49 U.S.C. 10502(d) may be filed at any time. The filing of a petition to revoke will not automatically stay the transaction.

An original and 10 copies of all pleadings, referring to STB Finance Docket No. 34531, must be filed with the Surface Transportation Board, 1925 K Street, NW., Washington, DC 20423–0001. In addition, one copy of each pleading must be served on John Broadley, 1054 31st Street, NW., Suite 200, Washington, DC 20007.

Board decisions and notices are available on our Web site at *www.stb.dot.gov.*

Decided: November 22, 2004.

By the Board, David M. Konschnik, Director, Office of Proceedings.

Vernon A. Williams,

Secretary.

[FR Doc. 04–26932 Filed 12–7–04; 8:45 am]

BILLING CODE 4915–01–P

[1] This notice corrects one served and published in this docket on November 30, 2004, to reflect that the verified notice of exemption was filed under 49 CFR 1150.45 and to make a conforming change.

[2] In a decision in this proceeding served on November 22, 2004, the Board granted a request by INRD for waiver of the 60-day advance labor notice requirement of 49 CFR 1150.42(e).

[3] See The Indiana Rail Road Company-Operation Exemption-Monon Rail Preservation Corporation, STB Finance Docket No. 33670 (STB served Feb. 21, 2001).

DEPARTMENT OF THE TREASURY

Internal Revenue Service

Open Meeting of the Ad Hoc Committee of the Taxpayer Advocacy Panel

AGENCY: Internal Revenue Service (IRS), Treasury.

ACTION: Notice.

SUMMARY: An open meeting of the Ad Hoc Committee of the Taxpayer Advocacy Panel will be conducted (via teleconference). The TAP will be discussing issues pertaining to lessoning the burden for individuals. Recommendations for IRS systemic changes will be developed.

DATES: The meeting will be held Monday, January 3, 2005.

FOR FURTHER INFORMATION CONTACT: Mary O'Brien at 1–888–912–1227, or 206–220–6096.

SUPPLEMENTARY INFORMATION: Notice is hereby given pursuant to Section 10(a)(2) of the Federal Advisory Committee Act, 5 U.S.C. App. (1988) that an open meeting of the Ad Hoc Committee of the Taxpayer Advocacy Panel will be held Monday, January 3, 2005 from 1 p.m. eastern time to 2 p.m. eastern time via a telephone conference call. If you would like to have the TAP consider a written statement, please call 1–888–912–1227 or 206–220–6096, or write to Mary O'Brien, TAP Office, 915 2nd Avenue, MS W–406, Seattle, WA 98174 or you can contact us at *http://www.improveirs.org.* Due to limited conference lines, notification of intent to participate in the telephone conference call meeting must be made with Mary O'Brien. Ms. O'Brien can be reached at 1–888–912–1227 or 206–220–6096.

The agenda will include the following: Various IRS issues.

Dated: December 3, 2004.

Bernard Coston,

Director, Taxpayer Advocacy Panel.

[FR Doc. 04–26955 Filed 12–7–04; 8:45 am]

BILLING CODE 4830–01–P

DEPARTMENT OF THE TREASURY

Internal Revenue Service

Open Meeting of the Wage & Investment Reducing Taxpayer Burden (Notices) Issue Committee of the Taxpayer Advocacy Panel

AGENCY: Internal Revenue Service (IRS), Treasury.

ACTION: Notice.

SUMMARY: An open meeting of the Wage & Investment Reducing Taxpayer Burden (Notices) Issue Committee of the Taxpayer Advocacy Panel will be conducted (via teleconference). The Taxpayer Advocacy Panel is soliciting public comments, ideas and suggestions on improving customer service at the Internal Revenue Service.

DATES: The meeting will be held Thursday, January 6, 2005 from 12 p.m. to 1 p.m. e.t.

FOR FURTHER INFORMATION CONTACT: Sallie Chavez at 1–888–912–1227, or 954–423–7979.

SUPPLEMENTARY INFORMATION: Notice is hereby given pursuant to section 10(a)(2) of the Federal Advisory Committee Act, 5 U.S.C. App. (1988) that an open meeting of the Wage & Investment Reducing Taxpayer Burden (Notices) Issue Committee of the

Taxpayer Advocacy Panel will be held Thursday, January 6, 2005, from 12 p.m. to 1 p.m. ET. via a telephone conference call. If you would like to have the TAP consider a written statement, please call 1–888–912–1227 or 954–423–7979, or write Sallie Chavez, TAP Office, 1000 South Pine Island Road, Suite 340, Plantation, FL 33324. Due to limited conference lines, notification of intent to participate in the telephone conference call meeting must be made with Sallie Chavez. Ms. Chavez can be reached at 1–888–912–1227 or 954–423–7979, or post comments to the Web site: *http://www.improveirs.org.*

The agenda will include: Various IRS issues.

Dated: December 3, 2004.

Bernard Coston,

Director, Taxpayer Advocacy Panel.

[FR Doc. 04–26956 Filed 12–7–04; 8:45 am]

BILLING CODE 4830–01–P

DEPARTMENT OF THE TREASURY

Internal Revenue Service

Open Meeting of the Area 3 Taxpayer Advocacy Panel (Including the States of Florida, Georgia, Alabama, Mississippi, Louisiana, Arkansas and Tennessee and Puerto Rico)

AGENCY: Internal Revenue Service (IRS), Treasury.

ACTION: Notice.

SUMMARY: An open meeting of the Area 3 Taxpayer Advocacy Panel will be conducted (via teleconference). The Taxpayer Advocacy Panel is soliciting public comments, ideas, and suggestions on improving customer service at the Internal Revenue Service.

DATES: The meeting will be held Tuesday, January 4, 2005 from 11 a.m. to 12 p.m. e.t.

FOR FURTHER INFORMATION CONTACT: Sallie Chavez at 1–888–912–1227, or 954–423–7979.

SUPPLEMENTARY INFORMATION: Notice is hereby given pursuant to section 10(a)(2) of the Federal Advisory Committee Act, 5 U.S.C. App. (1988) that an open meeting of the Area 3 Taxpayer Advocacy Panel will be held Tuesday, January 4, 2005, from 11 a.m. to 12 p.m. e.t. via a telephone conference call. If you would like to have the TAP consider a written statement, please call 1–888–912–1227 or 954–423–7979, or write Sallie Chavez, TAP Office, 1000 South Pine Island Rd., Suite 340, Plantation, FL 33324. Due to limited conference lines, notification of intent to participate in the telephone conference call meeting must be made with Sallie Chavez. Ms. Chavez can be reached at 1–888–912–1227 or 954–423–7979, or post comments to the Web site: *http://www.improveirs.org.*

The agenda will include: Various IRS issues.

Dated: December 3, 2004.

Bernard Coston,

Director, Taxpayer Advocacy Panel.

[FR Doc. 04–26957 Filed 12–7–04; 8:45 am]

BILLING CODE 4830–01–P

DEPARTMENT OF THE TREASURY

Internal Revenue Service

Open Meeting of the Area 6 Taxpayer Advocacy Panel (Including the States of Alaska, Arizona, Colorado, Hawaii, Idaho, Montana, New Mexico, Nevada, Oregon, Washington and Wyoming)

AGENCY: Internal Revenue Service (IRS), Treasury.

ACTION: Notice.

SUMMARY: An open meeting of the Area 6 committee of the Taxpayer Advocacy Panel will be conducted (via teleconference). The Taxpayer Advocacy Panel (TAP) is soliciting public comments, ideas, and suggestions on improving customer service at the Internal Revenue Service. The TAP will use citizen input to make recommendations to the Internal Revenue Service.

DATES: The meeting will be held Wednesday, January 5, 2005.

FOR FURTHER INFORMATION CONTACT: Dave Coffman at 1–888–912–1227, or 206–220–6096.

SUPPLEMENTARY INFORMATION: Notice is hereby given pursuant to Section 10(a)(2) of the Federal Advisory Committee Act, 5 U.S.C. App. (1988) that an open meeting of the Area 6 Taxpayer Advocacy Panel will be held Wednesday, January 5, 2005 from 2 p.m. Pacific time to 3 p.m. Pacific time via a telephone conference call. The public is invited to make oral comments. Individual comments will be limited to 5 minutes. If you would like to have the TAP consider a written statement, please call 1–888–912–1227 or 206–220–6096, or write to Dave Coffman, TAP Office, 915 2nd Avenue, MS W–406, Seattle, WA 98174 or you can contact us at *http://www.improveirs.org.* Due to limited conference lines, notification of intent to participate in the telephone conference call meeting must be made with Dave Coffman. Mr. Coffman can be reached at 1–888–912–1227 or 206–220–6096.

The agenda will include the following: Various IRS issues.

Dated: December 3, 2004.

Bernard Coston,

Director, Taxpayer Advocacy Panel.

[FR Doc. 04–26958 Filed 12–7–04; 8:45 am]

BILLING CODE 4830–01–P

Corrections

Federal Register

Vol. 69, No. 235

Wednesday, December 8, 2004

This section of the FEDERAL REGISTER contains editorial corrections of previously published Presidential, Rule, Proposed Rule, and Notice documents. These corrections are prepared by the Office of the Federal Register. Agency prepared corrections are issued as signed documents and appear in the appropriate document categories elsewhere in the issue.

DEPARTMENT OF COMMERCE

Bureau of Industry and Security

Action Affecting Export Privileges; Gerald Morey

Correction

In notice document 04–25696 beginning on page 67700 in the issue of Friday, November 19, 2004, make the following corrections:

1. On page 67700, in the first column, after the subject heading, in the first line, ''Morely'' should read ''Morey''.

2. On the same page, in the second column, in the second full paragraph, in the fourth line, ''FIC'' should read ''FCI''.

[FR Doc. C4–25696 Filed 12–7–04; 8:45 am]

BILLING CODE 1505–01–D

DEPARTMENT OF EDUCATION

Notice of Proposed Information Collection Requests

Correction

In notice document E4–3122 beginning on page 65153 in the issue of Wednesday, November 10, 2004, make the following correction:

On page 65153, in the second column, in the **DATES** section, in the second and third lines, ''January 10, 2004'' should read ''January 10, 2005''.

[FR Doc. Z4–3122 Filed 12–7–04; 8:45 am]

BILLING CODE 1505–01–D

Federal Register

Wednesday,
December 8, 2004

Part II

Securities and Exchange Commission

17 CFR Parts 240, 242, and 249
Self-Regulatory Organizations—Various Amendments; Proposed Rule

SECURITIES AND EXCHANGE COMMISSION

17 CFR Parts 240, 242, and 249

[Release No. 34–50699; File No. S7–39–04]

RIN 3235–AJ33

Fair Administration and Governance of Self-Regulatory Organizations; Disclosure and Regulatory Reporting by Self-Regulatory Organizations; Recordkeeping Requirements for Self-Regulatory Organizations; Ownership and Voting Limitations for Members of Self-Regulatory Organizations; Ownership Reporting Requirements for Members of Self-Regulatory Organizations; Listing and Trading of Affiliated Securities by a Self-Regulatory Organization

AGENCY: Securities and Exchange Commission.

ACTION: Proposed rule.

SUMMARY: The Securities and Exchange Commission (''Commission'') is proposing to adopt new rules and amend existing rules and forms under the Securities Exchange Act of 1934 (''Exchange Act''). The proposals pertain to the governance, administration, transparency and ownership of self-regulatory organizations (''SROs'') that are national securities exchanges or registered securities associations and the periodic reporting of information by these SROs regarding their regulatory programs. The proposals also relate to the listing and trading by SROs of their own or affiliated securities.

First, the proposals would impose new governance standards on national securities exchanges and registered securities associations by requiring a majority of the members of the exchange's or association's board of directors to be independent. In addition, key committees of the board would be required to be composed solely of independent directors. The proposals would define the term ''independent director.'' The proposals also would require exchanges and associations to establish policies and procedures to maintain a separation between their regulatory functions and their market operations and other commercial interests, and require that funds received from regulatory fines, fees, and penalties be used for regulatory purposes.

Further, the proposals would require national securities exchanges and registered securities associations to prohibit any member that is a broker or dealer from owning and voting more than 20% of the ownership interest in the exchange or the association, or a facility of the exchange or association. To supplement these ownership and voting provisions, the proposals also would require each member of an exchange or association that is a broker or dealer to file a report with the Commission when the member acquires ownership of more than 5% of any interest in the exchange or association, or any facility thereof. Also, the Commission proposes to require national securities exchanges and national securities associations to maintain their books and records in the United States. Together, these proposals are designed to strengthen the governance and administration of SROs and address the possible concentration of ownership by member firms.

In addition, the Commission proposes to amend its forms for registration as a national securities exchange or registered securities association to require that these SROs file with the Commission and publicly disclose enhanced information relating to their governance, regulatory programs, finances, ownership structure, and other matters. Further, the Commission's rules governing the procedures for filing amendments to these registration forms would be revised to require more frequent updating of the required information and the posting of the required information on the SROs' Internet Web sites. These proposals are designed to provide greater transparency to key aspects of the governance, ownership structure, and regulatory operations of national securities exchanges and registered securities associations.

The Commission also proposes to require national securities exchanges and registered securities associations to file with the Commission, in an electronic format, quarterly and annual reports on particular aspects of their regulatory programs. This proposal is intended to enhance the Commission's oversight and surveillance of exchanges and associations by requiring them to provide the Commission with detailed regulatory information on a regular basis, thereby assisting the Commission to oversee more effectively the SROs' regulatory programs and better identify any trends or issues that may arise.

Finally, the Commission proposes to impose requirements on a national securities exchange or registered securities association that chooses to list or trade its own security, the security of any trading facility, or the security of an affiliate of itself or a facility. The proposed requirements are designed to assure that these SROs are able to enforce effectively their listing standards with respect to, and supervise trading in, their own or a facility's securities, or the securities of affiliates of the SRO or a facility.

DATES: Comments should be submitted on or before January 24, 2005.

ADDRESSES: Comments may be submitted by any of the following methods:

Electronic Comments

- Use the Commission's Internet comment form (*http://www.sec.gov/rules/proposed.shtml*); or
- Send an e-mail to *rule-comments@sec.gov.* Please include File Number S7–39–04 on the subject line; or
- Use the Federal eRulemaking Portal (*http://www.regulations.gov*). Follow the instructions for submitting comments.

Paper Comments

- Send paper comments in triplicate to Jonathan G. Katz, Secretary, Securities and Exchange Commission, 450 Fifth Street, NW., Washington, DC 20549–0609.

All submissions should refer to File Number S7–39–04. This file number should be included on the subject line if e-mail is used. To help us process and review your comments more efficiently, please use only one method. The Commission will post all comments on the Commission's Internet Web site (*http://www.sec.gov/rules/proposed.shtml*). Comments are also available for public inspection and copying in the Commission's Public Reference Room, 450 Fifth Street, NW., Washington, DC 20549. All comments received will be posted without change; we do not edit personal identifying information from submissions. You should submit only information that you wish to make available publicly.

FOR FURTHER INFORMATION CONTACT: *SRO Governance and Disclosure:* Nancy J. Sanow, Assistant Director, at (202) 942–0796, Susie Cho, Special Counsel, at (202) 942–0748, Leah Mesfin, Special Counsel, at (202) 942–0196, Geraldine Idrizi, Attorney, at (202) 942–7317, and A. Michael Pierson, Attorney, at (202) 942–0192; *Reporting Requirements for SROs:* Nancy J. Sanow, Assistant Director, at (202) 942–0796, and Richard Holley III, Attorney, at (202) 942–8086; and *SRO Ownership and Voting Restrictions, SRO Self-Listing, and Reporting Requirements for Members:* Heather Seidel, Attorney Fellow, at (202) 942–0788, Sonia Trocchio, Special Counsel, at (202) 942–0753, David Hsu, Special Counsel, at (202) 942–0731, and Jennifer Dodd, Attorney, at (202) 824–5471; all of whom are in the Division of

Market Regulation, Securities and Exchange Commission, 450 Fifth Street NW, Washington DC 20549–1001.

SUPPLEMENTARY INFORMATION: We are proposing to add new Rules 3b–19, 6a–5, 17a–26, 17a–27, and Regulation AL under the Exchange Act; amend Rules 6a–2, 15Aa–1, and 17a–1 under the Exchange Act; redesignate Rule 15Aj–1 under the Exchange Act as Rule 15Aa–2 and amend redesignated Rule 15Aa–2; amend Form 1 under the Exchange Act; redesignate Form X–15AA–1 under the Exchange Act as Form 2 and amend redesignated Form 2; and remove Forms X–15AJ–1 and X–15AJ–2 under the Exchange Act.

Table of Contents

I. Background
A. Self-Regulation under the Exchange Act
B. Overview of Recent Developments
1. Governance Concerns
2. Concerns Relating to Weaknesses of SRO Regulatory Programs
3. Competitive Concerns
4. Concerns Relating to New Ownership Structures
II. Fair Administration and Governance of National Securities Exchanges and Registered Securities Associations
A. Background and Need for Proposed Rules 6a–5 and 15Aa–3
B. Description of Proposed Rules 6a–5 and 15Aa–3
1. Scope of Proposed Rules 6a–5 and 15Aa–3
2. Board Consisting of a Majority of Independent Directors
a. Determination of Independence
b. Independent Board Requirements
c. Fair Representation
3. Standing Committees
4. Other Committees of the Board
5. Other Requirements Applicable to Directors and Officers
6. Executive Sessions of the Board
7. Separation of Chairman of the Board and CEO Positions
8. Separation of Regulatory and Market Operations
a. Independence of Regulatory Program
b. Use of Regulatory Fees, Fines, and Penalties
c. Confidentiality of Regulatory and Trading Information
9. Member Voting and Ownership Limitations
a. Members' Interests Aggregated with Their Related Persons
b. Solicitation of Revocable Proxies
c. Requirement to Divest Ownership Interest and Restrict Voting
d. Ability to Obtain Information
10. Code of Conduct and Ethics and Governance Guidelines
11. Exemption Provision
12. Implementation
C. Request for Comment
III. Proposed Regulation AL—National Securities Exchanges and Registered Securities Associations Listing Affiliated Securities
A. Background and Need for Proposed Regulation AL
B. Description of Proposed Regulation AL
1. Definition of Affiliated Security
2. Initial Listing
3. Continued Listing and Trading
4. Parity in Application of Listing and Trading Rules
5. Exemption Provision
C. Request for Comment
IV. Disclosure by Eros
A. Overview of Proposed Amendments to Registration Forms for Exchanges and Associations
B. Description of Registration Processes
1. Registration as a National Securities Exchange or Exemption from Such Registration Based on Limited Volume
2. Registration as a Registered Securities Association or Affiliated Securities Association
C. Proposed Revisions to Form 1 and New Form 2
1. Scope of Disclosures Required by Revised Form 1 and New Form 2
2. Composition, Structure, and Responsibilities of the Board
3. Composition, Structure, and Responsibilities of Committees and Executive Boards
4. Governance
a. Governance Guidelines
b. Code of Conduct and Ethics
5. Organizational Charts
6. Regulatory Program
7. Audited Financial Statements and Other Financial Information
a. Budget and Revenues Devoted to Regulatory Activities
b. Revenues and Expenses
c. Other Financial Disclosures
8. Relationship between SROs, Facilities, and Their Affiliates
9. Ownership
10. Listing and Trading of Affiliated Securities
11. Location of Books and Records
12. Miscellaneous Matters Specific to New Form 2
13. Current Disclosures to be Retained in Revised Form 1 and Added to New Form 2
a. Constitution, Articles of Incorporation, Bylaws, and Rules
b. Rulings and Interpretations
c. Officers
d. Financial Statements of Affiliates
e. General Information Relating to Affiliates and SRO Trading Facilities
f. Operation of SRO Trading Facilities
g. Membership Forms
h. Financial Responsibility and Minimum Capital Requirements of Members
i. Listing Applications
j. Criteria for Membership
k. List of Members
l. Securities Listed and Traded
D. Timing and Format of Revised Form 1 and New Form 2
E. Proposed Changes to Rule 15Aa–1
F. Proposed Repeal of Forms X–15AJ–1 and X–15AJ–2
G. Request for Comment
V. Periodic Reporting Obligations of Exchanges and Associations
A. Background and Need for Proposed Rule 17a–26
B. Scope and Timing of Reports Required by Proposed Rule 17a–26
1. Quarterly Reports
2. Annual Reports
C. Format of Reports
D. Quarterly Reporting of Regulatory Information
1. Information on the SRO's Surveillance Program
2. Information on Complaints Received
3. Investigations, Examinations, and Enforcement Actions
4. Information on Listings Programs
5. Copies of Board and Committee Meeting Agenda
E. Annual Reporting of Regulatory Information
1. Cumulative Summary of Quarterly Information
2. Processes for Carrying Out Regulatory Responsibilities
3. Evaluation of the Regulatory Program
4. Internal Controls
5. Employment Arrangements with Regulatory Personnel
6. Copies of Standing Committee Evaluations
7. Compliance with Regulatory Plans
F. Audit Report of Electronic SRO Trading Facilities
G. Certifications
H. Interim Changes
I. Confidentiality of Reports
J. Compliance Date
K. Exemptions and Extensions of Time for Filing Reports
L. Filing of Reports
M. Request for Comment
VI. Proposed Rule 17a–27
A. Background and Need for Proposed Rule 17a–27
B. Description of Proposed Rule 17a–27
1. Brokers and Dealers Subject to the Rule
2. Information Required to be Filed
3. Timing of Filing
4. Filings with the Exchange or Association
5. Exemptions
C. Request for Comment
VII. Implementation
VIII. General Request for Comment
IX. Paperwork Reduction Act Analysis
A. Proposed Rule 3b–19
B. Proposed Amendments to Rule 6a–2, Revised Form 1, Rule 15Aa–2, and New Form 2
1. Summary of Collections of Information
2. Proposed Use of Information
3. Respondents
4. Reporting and Recordkeeping Burden
5. Collections of Information are Mandatory
6. Record Retention Period
C. Proposed Rules 6a–5 and 15Aa–3
1. Summary of Collection of Information
2. Proposed Use of Information
3. Respondents
4. Reporting and Recordkeeping Burden
5. Collection of Information is Mandatory
6. Record Retention Period
D. Proposed Regulation AL
1. Summary of Collection of Information
2. Proposed Use of Information
3. Respondents
4. Reporting and Recordkeeping Burden
5. Collection of Information is Mandatory
6. Record Retention Period
E. Proposed Amendments to Rule 17a–1
F. Proposed Rule 17a–26

1. Summary of Collection of Information
2. Proposed Use of Information
3. Respondents
4. Reporting and Recordkeeping Burden
5. Collection of Information is Mandatory
6. Record Retention Period
G. Proposed Rule 17a–27
1. Summary of Collection of Information
2. Proposed Use of Information
3. Respondents
4. Reporting and Recordkeeping Burden
5. Collection of Information is Mandatory
6. Record Retention Period
H. Request for Comment
X. Consideration of Costs and Benefits
A. Costs and Benefits of Proposed Rules 6a–5 and 15Aa–3
1. Benefits
2. Costs
3. Request for Comment
B. Costs and Benefits of Proposed Regulation AL
1. Benefits
2. Costs
3. Request for Comment
C. Costs and Benefits of Proposed Rule 6a–2 and Revised Form 1, and Rule 15Aa–2 and New Form 2
1. Benefits
2. Costs
3. Request for Comment
D. Costs and Benefits of Proposed Amendments to Rule 17a–1
1. Benefits
2. Costs
3. Request for Comment
E. Costs and Benefits of Proposed Rule 17a–26
1. Benefits
2. Costs
3. Request for Comment
F. Costs and Benefits of Proposed Rule 17a–27
1. Benefits
2. Costs
3. Request for Comment
XI. Consideration of Burden on Competition, and Promotion of Efficiency, Competition, and Capital Formation
XII. Consideration of Impact on the Economy
XIII. Regulatory Flexibility Act Certification
XIV. Statutory Authority and Text of Proposed Rules

I. Background

A. Self-Regulation Under the Exchange Act

The system of regulation for our Nation's securities markets and market participants is grounded on the principle of self-regulation. Thus, the Exchange Act [1] sets forth a regulatory model that combines both industry and government responsibility, based on the notion that regulation is most effective when it is done as closely as possible to the regulated activity. Congress enhanced this framework for the regulation of securities markets and market participants since the adoption of the Exchange Act, most notably in the Securities Acts Amendments of 1975.[2] While Congress at that time again weighed the risks of permitting the securities industry to regulate itself against the burdens of attempting to assure regulation directly through the government on a wide scale,[3] it refrained from changing the underlying principle of self-regulation. Thus, although the Commission has ultimate responsibility for oversight of the U.S. securities markets and their participants, the SROs continue to have ''front-line'' responsibility for overseeing trading on their markets and their members' compliance with applicable statutory and regulatory provisions.[4]

Congress, however, gave the Commission a wide range of tools to oversee this self-regulatory system and to compel SROs to act when they fail to provide adequate protection to investors.[5] For example, the Commission is empowered to approve SRO rules [6] and to abrogate, add to, or delete from SRO rules.[7] The Commission also is authorized to review disciplinary actions taken by SROs against their members.[8] In addition, the Commission has the authority to require exchanges and associations to keep records and to file reports with the Commission.[9] All records of exchanges and associations are subject, at any time, or from time to time, to reasonable periodic, special, or other examinations by the Commission.[10] If the Commission identifies deficiencies, it will bring them to the attention of the SRO and can inspect the SRO to ascertain whether corrective action has been taken. Moreover, the Commission has the authority to impose limitations on the operations of an SRO if it finds that the SRO has violated or is unable to comply with any provisions of the Exchange Act or rules or regulations thereunder, or with any of the SRO's own rules, or has failed to enforce compliance with any such provision by its members.[11] Further, the Commission has the authority to suspend or revoke the registration of an SRO,[12] and remove from office or censure any officer or director of an SRO.[13]

As part of its duties, an SRO must conduct surveillance of trading in its markets and examine the operations of its members. In addition, an exchange or association may not be registered with the Commission unless it is so organized and has the capacity to carry out the purposes of the Exchange Act and to comply with, and enforce its members' compliance with, the federal securities laws and rules thereunder, as well as its own rules.[14] An exchange or association also may not be registered unless the rules of the exchange or association, among other things: (1) Provide for a fair representation of its members on the board of directors; [15] (2) provide for an equitable allocation of

[1] 15 U.S.C. 78a, *et seq.*

[2] Securities Acts Amendments of 1975, Pub. L. 94–29, 89 Stat. 97 (1975).

[3] S. Rep. No. 75, 94th Cong., 1st Sess. (1975) at 201.

[4] Section 3(a)(26) of the Exchange Act, 15 U.S.C. 78c(a)(26), defines a self-regulatory organization as any national securities exchange, registered securities association, or registered clearing agency, or (solely for purposes of Sections 19(b), 19(c), and 23(b) of the Exchange Act, 15 U.S.C. 78s(b), 78s(c), and 78w(b)), the Municipal Securities Rulemaking Board. The proposed rulemaking would apply only to those SROs that are national securities exchanges registered under Section 6(a) of the Exchange Act, 15 U.S.C. 78f(a), and securities associations registered under Section 15A(a) of the Exchange Act, 15 U.S.C. 78*o*–3(a).

[5] *See supra* note 2.

[6] Section 19(b)(1) of the Exchange Act, 15 U.S.C. 78s(b)(1), requires an SRO to file with the Commission copies of any proposed rule or any proposed change in, addition to, or deletion from the rules of such SRO, accompanied by a concise general statement of the basis and purpose of such proposed rule change, for Commission approval. This filing requirement is supplemented by Rule 19b–4 under the Exchange Act, 17 CFR 240.19b–4.

[7] Section 19(c) of the Exchange Act, 15 U.S.C. 78s(c), permits the Commission, by rule, to abrogate, add to, or delete from the rules of an SRO as the Commission deems necessary or appropriate to insure the fair administration of the SRO, to conform its rules to requirements of the Exchange Act and the rules and regulations thereunder applicable, or otherwise in furtherance of the purposes of the Exchange Act.

[8] Section 19(d)(2) of the Exchange Act, 15 U.S.C. 78s(d)(2), states that notice of any final disciplinary sanction, denial of membership or participation, or limitation of access to services to a person, member, or person associated with a member shall be subject to review by the appropriate regulatory agency for such member, participant, applicant, or other person. Section 3(a)(34)(E) of the Exchange Act, 15 U.S.C. 78c(a)(34)(E), states that when used with respect to a member of a national securities exchange or registered securities association, the appropriate regulatory authority is the Commission.

[9] Section 17(a)(1) of the Exchange Act, 15 U.S.C. 78q(a)(1), states that exchanges and associations, among others, are required to make, keep and furnish any records, and make and disseminate any reports, that the Commission, by rule, prescribes as necessary or appropriate in the public interest, for the protection of investors, or otherwise in furtherance of the purposes of the Exchange Act.

[10] Section 17(b) of the Exchange Act, 15 U.S.C. 78q(b), states that all records of a national securities exchange or registered securities association, among others, are subject at any time, or from time to time, to such reasonable periodic, special, or other examinations by representatives of the Commission, as the Commission deems necessary or appropriate in the public interest, for the protection of investors, or otherwise in furtherance of the purposes of the Exchange Act.

[11] Section 19(h)(1) of the Exchange Act, 15 U.S.C. 78s(h)(1).

[12] *Id.*

[13] Section 19(h)(4) of the Exchange Act, 15 U.S.C. 78s(h)(4).

[14] Sections 6(b)(1) and 15A(b)(2) of the Exchange Act, 15 U.S.C. 78f(b)(1) and 78*o*–3(b)(2).

[15] Sections 6(b)(3) and 15A(b)(4) of the Exchange Act, 15 U.S.C. 78f(b)(3) and 78*o*–3(b)(4).

dues, fees, and charges among its members;[16] (3) are designed to prevent fraudulent and manipulative acts and practices;[17] (4) are designed to promote just and equitable principles of trade;[18] (5) are designed to perfect the mechanism of a free and open market and a national market system;[19] (6) protect investors and the public interest;[20] and (7) provide a process for disciplining its members.[21] Accordingly, the Exchange Act makes clear that SROs are charged with an important public trust to carry out their self-regulatory responsibilities effectively and fairly, while fostering free and open markets, protecting investors, and promoting the public trust.[22]

B. Overview of Recent Developments

Recent developments have prompted the Commission to review aspects of its oversight and regulation of national securities exchanges and registered securities associations and to consider whether changes are necessary to respond to those developments.

1. Governance Concerns

In the wake of corporate scandals that threatened investor confidence in the securities markets,[23] the governance of companies listed on securities exchanges and The Nasdaq Stock Market (''Nasdaq'') became the focus of attention.[24] After allegations of improprieties by several issuers and their executives, Congress enacted the Sarbanes-Oxley Act of 2002 (''Sarbanes-Oxley Act'')[25] to improve the accuracy and reliability of corporate disclosures and the effective oversight of the financial reporting process.[26] During this period, the New York Stock Exchange, Inc. (''NYSE'') and Nasdaq each undertook a review of its own corporate governance listing standards and proposed changes to strengthen those standards.[27] The new NYSE and Nasdaq corporate governance listing rules, which were approved by the Commission in November 2003, establish a more comprehensive definition of ''independence'' for directors and require the majority of members on listed companies' boards to satisfy the new independence standard.[28] In addition, the new NYSE and Nasdaq rules include a number of provisions that mandate and facilitate independent director oversight of functions relating to corporate governance, auditing, director nominations, and compensation.[29]

In light of the governance changes proposed by the NYSE and Nasdaq for their listed issuers, in March 2003, the Commission's Chairman requested that the SROs review the adequacy of their own governance practices.[30] In his letter to each SRO, the Chairman noted that the SROs play a critical role in our securities markets as standard setters for listed companies, operators of trading markets, and front-line regulators of securities firms.[31] Further, the Chairman referred to the enhanced corporate governance listing standards proposed by the NYSE and Nasdaq as a high standard that the SROs should demand not only of listed issuers, but also of themselves.[32]

Several months later, while the NYSE was reviewing its own governance practices, the media published reports of the proposed extension of the employment agreement of its then Chairman and Chief Executive Officer (''CEO''), as well as an anticipated substantial payout of his accrued compensation. In response, the Commission's Chairman sent a letter to the Chairman of the NYSE's Compensation and Human Resources Committee and Special Governance Committee requesting information regarding the compensation of the NYSE Chairman and CEO and the decision-making processes at the NYSE that led to the pay package.[33] Shortly thereafter, the Commission's Chairman sent letters to the other SROs requesting that they provide details about the extent of public representation on their boards and key committees (including the Compensation Committee); the decision-making processes with respect to the nomination of directors, their assignment to committees, and the compensation of executives; and the SROs' past practices and current plans for public disclosure of these processes and the compensation arrangements of key executives.[34]

During this period, the NYSE announced the resignation of its Chairman and CEO and shortly thereafter named an interim Chairman. In November 2003, the NYSE filed with the Commission a proposal to amend the NYSE Constitution to implement a series of governance changes at the NYSE.[35] The proposal called for the

[16] Sections 6(b)(4) and 15A(b)(5) of the Exchange Act, 15 U.S.C. 78f(b)(4) and 78*o*–3(b)(5).

[17] Sections 6(b)(5) and 15A(b)(6) of the Exchange Act, 15 U.S.C. 78f(b)(5) and 78*o*–3(b)(6).

[18] *Id.*

[19] *Id.*

[20] *Id.*

[21] Sections 6(b)(7) and 15A(b)(7) of the Exchange Act, 15 U.S.C. 78f(b)(7) and 78*o*–(b)(7).

[22] *See* Sections 6(b)(5) and 15A(b)(6) of the Exchange Act, 15 U.S.C. 78f(b)(5) and 78*o*–3(b)(6).

[23] *See, e.g.*, John Waggoner and Thomas A. Fogarty, *Scandals Shred Investors' Faith: Because of Enron, Andersen, and Rising Gas Prices, the Public Is More Wary Than Ever of Corporate America*, USA Today, May 5, 2002, and Louis Aguilar, *Scandals Jolting Faith of Investors*, Denver Post, June 27, 2002.

[24] Nasdaq is a facility of the National Association of Securities Dealers, Inc. (''NASD''). Pursuant to proposed Rule 15Aa–3(b)(11), which would define the term ''facility'' with regard to a registered securities association, Nasdaq would continue to be a facility of the NASD.

[25] Sarbanes-Oxley Act of 2002, Pub. L. 107–204, 116 Stat. 745 (2002).

[26] H.R. Conf. Rep. No. 610, 107th Cong., 2nd Sess. (2002).

[27] *See* Securities Exchange Act Release Nos. 47672 (April 11, 2003), 68 FR 19051 (April 17, 2003) (publishing for comment File No. SR–NYSE–2002–23); 48137 (July 8, 2003), 68 FR 42152 (July 16, 2003) (publishing for comment File No. SR–NASD–2002–80); 48123 (July 2, 2003), 68 FR 41191 (July 10, 2003) (publishing for comment File No. SR–NASD–2002–77); 48124 (July 2, 2003), 68 FR 41193 (July 10, 2003) (publishing for comment File No. SR–NASD–2002–138); 48125 (July 2, 2003), 68 FR 41194 (July 10, 2003) (publishing for comment File No. SR–NASD–2002–139); and 47516 (March 17, 2003), 68 FR 14451 (March 25, 2003) (publishing for comment File No. SR–NASD–2002–141).

[28] *See* Securities Exchange Act Release No. 48745 (November 4, 2003), 68 FR 64154 (November 12, 2003) (order approving File Nos. SR–NYSE–2002–33, SR–NASD–2002–77, SR–NASD–2002–80, SR–NASD–2002–138, SR–NASD–2002–139, and SR–NASD–2002–141).

[29] *See id.*

[30] *See* Letters from William H. Donaldson, Chairman, Commission, to Salvatore F. Sodano, Chairman & CEO, American Stock Exchange LLC (''Amex''); Kenneth R. Leibler, Chairman & CEO, Boston Stock Exchange, Inc. (''BSE''); William J. Brodsky, Chairman & CEO, Chicago Board Options Exchange, Inc. (''CBOE''); David A. Herron, CEO, Chicago Stock Exchange, Inc. (''CHX''); David Colker, President & CEO, Cincinnati Stock Exchange, Inc. (''CSE''); David Krell, CEO, International Securities Exchange, Inc. (''ISE''); Philip D. DeFeo, Chairman & CEO, Pacific Exchange, Inc. (''PCX''); Meyer S. Frucher, Chairman & CEO, Philadelphia Stock Exchange, Inc. (''Phlx''); Robert R. Glauber, Chairman & CEO, NASD; Richard G. Ketchum, President & Deputy Chairman, Nasdaq; and Richard A. Grasso, Chairman & CEO, NYSE (March 26, 2003). Copies of these letters are available in the Commission's Public Reference Room under File No. S7–39–04.

[31] *See id.*

[32] *See id.*

[33] *See* Letter from William H. Donaldson, Chairman, Commission, to The Honorable H. Carl McCall, Chairman, Human Resources and Compensation Committee, Chairman, Special Committee on Governance of the NYSE, NYSE, dated September 2, 2003. A copy of this letter is available in the Commission's Public Reference Room under File No. S7–39–04.

[34] *See* Letters from William H. Donaldson, Chairman, Commission, to Salvatore F. Sodano, Chairman & CEO, Amex; Kenneth R. Leibler, Chairman & CEO, BSE; William J. Brodsky, Chairman & CEO, CBOE; Robert; David A. Herron, CEO, CHX; David Colker, President & CEO, CSE; David Krell, President & CEO, ISE; Philip D. DeFeo, Chairman & CEO, PCX; Meyer S. Frucher, Chairman & CEO, Phlx; Robert R. Glauber, Chairman & CEO, NASD; and Robert Greifeld, President & CEO, Nasdaq (September 23, 2003). Copies of these letters are available in the Commission's Public Reference Room under File No. S7–39–04.

[35] *See* Securities Exchange Act Release No. 48764 (November 7, 2003), 68 FR 64380 (November 13, 2003).

establishment of a new board of directors composed wholly of independent directors; an advisory board of executives that would be representative of the exchange's various constituencies; independent board committees with specific oversight authority for compensation, audit functions, the nominations process and regulatory matters; and an autonomous regulatory unit that would report directly to the regulatory oversight committee. The Commission approved the NYSE's governance revisions in December 2003.[36]

2. Concerns Relating to Weaknesses of SRO Regulatory Programs

In addition to the enhanced focus on SRO governance, recent Commission enforcement actions involving SROs have highlighted weaknesses in the effectiveness of certain SRO regulatory programs. In September 2003, for example, the Commission settled an administrative enforcement action against the CHX for failure to enforce its trading rules.[37] The Commission's order, among other things, included findings that the CHX's surveillance program failed adequately to detect violations by its members of the firm quote rule,[38] trading ahead prohibitions,[39] and the limit order display rule[40] from 1998 through 2001. As part of the undertakings imposed by the settlement, the CHX was required, among other things, to create a regulatory oversight committee comprised almost exclusively of individuals with no material business relationship with the exchange.[41] In addition, the CHX was required to file with the Commission various certifications by its officials confirming its ongoing compliance with its statutory obligations.

Also, recent Commission enforcement actions involving SRO members have pointed to weaknesses in the effectiveness of SROs' regulatory programs. In 2004, for example, the Commission settled enforcement actions against the seven NYSE specialist firms. The Commission found that, between 1999 and 2003, these specialist firms violated federal securities laws and NYSE rules by executing orders for their dealer accounts ahead of executable public customer orders.[42] As part of the settlement, the firms agreed to pay a total of more than $247 million in penalties and disgorgement, and agreed to implement steps to improve their compliance procedures and systems.

Moreover, the Commission's staff recently has conducted inspections of SROs that have raised questions regarding whether, in certain circumstances, SROs have governance structures that are sufficiently independent, or whether SROs have maintained regulatory programs that are sufficiently rigorous to detect, deter, and discipline for members' violations of the federal securities laws and rules and SRO rules.

Taken together, developments involving SRO governance, as well as the concerns raised by recent enforcement actions[43] and inspections involving SROs, have prompted the Commission to consider new regulatory measures with respect to SROs. The Commission therefore has determined to propose rules that would strengthen the governance of national securities exchanges and registered securities associations and the independence of their regulatory programs. Moreover, the Commission is proposing to enhance the level of information that would be publicly available about SROs, including with respect to their governance structures, finances, regulatory programs, and significant owners. Finally, the Commission believes that oversight of SROs would be enhanced, and inspections could be better targeted to problematic areas, if the Commission were to receive more extensive and frequent data about SRO regulatory programs in a systematic fashion. Therefore, the Commission is proposing a new SRO reporting rule that is intended to facilitate more effective Commission monitoring of SROs' regulatory programs. While the Commission is proposing other measures that would increase the transparency of SROs' operations, the information submitted under this proposed rule is intended to be used as part of the Commission's examination program and thus may not be publicly available.

3. Competitive Concerns

More broadly, the Commission's review of SROs also was prompted by marketplace developments and the increasingly competitive environment faced by SROs that operate trading facilities. For example, in recent years, market participants have developed a variety of alternative trading systems (''ATSs'') that furnish execution services historically provided by exchanges.[44] Under Regulation ATS,[45] ATSs may choose whether (a) to register as national securities exchanges, and thus assume the responsibilities of SROs; or (b) to register as broker-dealers under Sections 15(b) or 15C of the Exchange Act,[46] subject to certain additional reporting and conduct requirements.[47] Regulation ATS was designed to impose essential elements of market-oriented regulation on ATSs, while maintaining

[36] *See* Securities Exchange Act Release No. 48946 (December 17, 2003), 68 FR 74678 (December 24, 2003).

[37] *See In the Matter of Chicago Stock Exchange,* Securities Exchange Act Release No. 48566 (September 30, 2003) (''CHX Order'').

[38] *See* CHX Article XX, Rule 7.01; *see also* Exchange Act Rule 11Ac1–1, 17 CFR 240.11Ac1–1.

[39] *See* CHX Article XXX, Rule 2.

[40] *See* CHX Article XX, Rule 7.05; *see also* Exchange Act Rule 11Ac1–4, 15 CFR 240.11Ac1–4.

[41] The CHX's regulatory oversight committee must advise the CHX's board of governors about regulatory, compliance, and enforcement matters and assist the board in monitoring the design, implementation, and effectiveness of the CHX's compliance program. *See* CHX Order, *supra* note 37.

[42] *See In the Matter of Bear Wagner Specialists LLC,* Securities Exchange Act Release No. 49498 (March 30, 2004); *In the Matter of Fleet Specialist, Inc.,* Securities Exchange Act Release No. 49499 (March 30, 2004); *In the Matter of LaBranche & Co. LLC,* Securities Exchange Act Release No. 49500 (March 30, 2004); *In the Matter of Spear, Leeds & Kellogg Specialists LLC,* Securities Exchange Act Release No. 49501 (March 30, 2004); and In the Matter of Van der Moolen Specialists USA, LLC, Securities Exchange Act Release No. 49502 (March 30, 2004). These five firms agreed to pay a total of $241.8 million in penalties and disgorgement, and agreed to implement steps to improve their compliance procedures and systems. In July 2004, the Commission and the NYSE settled enforcement actions against two other NYSE specialist firms. *See In the Matter of SIG Specialists, Inc.,* Securities Exchange Act Release No. 50076 (July 26, 2004); and *In the Matter of Performance Specialist Group LLC,* Securities Exchange Act Release No. 50075 (July 26, 2004). These firms agreed to pay a total of $5.2 million in penalties and disgorgement, consisting of $1.7 million in civil money penalties and $3.5 million in disgorgement, and agreed to implement steps to improve their compliance procedures and systems.

[43] *See, e.g.,* CHX Order, supra note 37; *In the Matter of Certain Activities of Options Exchanges,* Securities Exchange Act Release No. 43268 (September 11, 2000) (proceeding against Amex, CBOE, PCX, and Phlx for engaging in anticompetitive activities and for failing adequately to enforce compliance with their own rules); and *In the Matter of NYSE, Inc.,* Securities Exchange Act Release No. 41574 (June 29, 1999) (proceeding against NYSE for failure to enforce compliance with federal securities laws and NYSE rules prohibiting proprietary and on-floor trading by NYSE floor broker members in violation of Section 19(g) of the Exchange Act, 15 U.S.C. 78s(g)).

[44] Alternative trading systems include electronic communications networks (''ECNs'') such as INET ATS (''INET''), a subsidiary of Instinet Group, Inc. An ECN is an electronic system that widely disseminates to third parties orders entered therein by an exchange market maker or over-the-counter (''OTC'') market maker, and permits such orders to be executed against in whole or in part. The term specifically excludes internal broker-dealer order routing systems and crossing systems, *i.e.,* systems that cross multiple orders at one or more specified times at a single price set by the ECN and do not allow orders to be crossed or executed against directly by participants outside of such times. 17 CFR 240.11Ac1–1(a)(8).

[45] *See* Regulation ATS, 17 CFR 242.300, *et seq.*

[46] 15 U.S.C. 78*o*(b) and 78*o*–5.

[47] *See* Regulation ATS, 17 CFR 242.300, *et seq.*

sufficient regulatory flexibility to foster market innovation.[48]

The highly-competitive environment of recent years also has induced alliances among particular SROs and ATSs to combine the regulatory status of the SRO with the market share of the ATS. In 2001, for example, the Commission approved a proposal by PCX to establish the Archipelago Exchange (''Arca-Ex'') as a facility of its subsidiary, PCX Equities, Inc. (''PCX Equities'').[49] In addition, several ECNs have made arrangements to execute and report trades through a particular exchange, and to share the market data revenues generated thereby.[50]

Moreover, the SROs face increased competition from foreign trading markets that operate under regulatory regimes that differ from the U.S. regulatory model. These foreign markets may not be subject to the same kind of regulatory requirements that markets operated by U.S. SROs must satisfy. For example, issuers listed on U.S. exchanges or Nasdaq generally are subject to different disclosure standards than issuers whose securities are listed and traded solely on foreign markets. These differences in the U.S. reporting regime may deter some foreign issuers from U.S. registration, with the result that their securities cannot be traded on U.S. exchanges or Nasdaq, but can be traded on foreign markets or on U.S. trading systems (such as ECNs) that are not operated by SROs.

The effect of these developments is that markets operated by SROs have faced increased competition from foreign trading markets and from electronic trading systems, such as ECNs, that have made substantial inroads into the market share of the traditional SRO markets, especially with respect to Nasdaq securities. Furthermore, historic differences in the securities traded by particular SROs are disappearing. For example, the NYSE and Amex historically dominated trading in their listed securities, and market makers dominated trading in Nasdaq stocks. Today, however, for Nasdaq stocks, automated order-driven market centers (such as Nasdaq's SuperMontage, Arca-Ex, and INET) have captured more than 50% of share volume.[51] For Amex-listed stocks (for which approximately 39% of share volume now is represented by two extremely active exchange-traded funds (''ETFs'')—the QQQ and SPDR), Amex now handles approximately 21% of the volume, with the remaining balance split among Arca-Ex, INET, and others.[52] The NYSE has retained approximately 80% of the volume in its listed stocks, but other market centers are attempting to raise the level of competition and increase their share of trading.[53] Moreover, the NYSE and Amex have sought to add automated facilities that are integrated with and complement their traditional exchange floors.[54]

The historic differences between SROs that operate options trading markets have also eroded. From 1977 until 1999, most actively traded options were traded on only one exchange. In 1989, the Commission adopted Rule 19c–5 under the Exchange Act, prohibiting exchanges from having rules that limit their ability to list any stock options class because that options class is listed on another options exchange.[55] The options exchanges, however, did not widely implement multiple listing of options until 1999. By that time, the U.S. Department of Justice (''DOJ'') and the Commission had begun to investigate the four floor-based options exchanges (Amex, CBOE, PCX, and Phlx) for engaging in anticompetitive activities—in particular, for refraining from listing options listed on another exchange—and for failing to enforce adequately compliance with their own rules.[56] In addition, during that period the ISE had filed an application with the Commission to register as a national securities exchange that would trade options.[57]

As part of their settlement with the Commission, the floor-based options exchanges were ordered to collectively spend $77 million on surveillance and enforcement. The settlement of the Commission's enforcement action and the entry of a consent decree in the DOJ case, along with the proposed entry of the ISE as a national securities exchange that intended to trade options, were the catalysts for the expansion of multiple listing of equity options. Today, virtually all actively traded equity options trade on multiple markets, a development that has enhanced competition among the options exchanges.[58] The entry of electronic options trading markets has further raised the level of competition.[59]

The recent developments outlined above have led the Commission to consider whether the increasing competitive pressures placed on SROs that operate trading facilities warrant additional measures that are designed to focus the SROs on their statutorily-mandated responsibilities as market regulators. Pursuant to the Exchange Act, SROs are charged with a public trust to implement and enforce the federal securities laws and rules, as well as their own rules with respect to their members.[60] Yet, as membership organizations, and in some cases as shareholder-owned organizations, SROs are expected to promote the economic interests of their members and their owners. In addition, SROs, as operators of trading markets, are critical to the success and viability of our capital markets. In this capacity, SROs play a key role in the price discovery process, are innovators of new products, and, through the listing mechanism, provide

[48] *See* Securities Exchange Act Release No. 40760 (December 8, 1998), 63 FR 70844 (December 22, 1998) (adopting Regulation ATS).

[49] *See* Securities Exchange Act Release No. 44983 (October 25, 2001), 66 FR 55225 (November 1, 2001) (establishing Arca-Ex as the equities trading facility of PCX Equities).

[50] For example, INET has arranged to execute and report its trades through the National Stock Exchange, Inc. (''NSX'') (formerly known as CSE).

[51] The figure is based on Nasdaq/UTP Plan market data (as of September 2004). Copies of this data are available in the Commission's Public Reference Room under File No. S7–39–04.

[52] The figure is based on Network B, CTS Activity market data (as of September 2004). Copies of this data are available in the Commission's Public Reference Room under File No. S7–39–04.

[53] The figure is based on Network A, CTS Activity market data (as of September 2004). Copies of this data are available in the Commission's Public Reference Room under File No. S7–39–04.

[54] *See* Securities Exchange Act Release Nos. 50173 (August 10, 2004), 69 FR 50407 (August 16, 2004) (notice of proposed rule change proposing improvements to NYSE's existing automatic execution facility, NYSE Direct+®) and 49921 (June 25, 2004), 69 FR 40690 (July 6, 2004) (approval of proposed rule change by Amex to enhance its Auto-Ex technology for exchange-traded funds and Nasdaq stocks traded on the exchange).

[55] *See* Securities Exchange Act Release No. 26870 (May 26, 1989), 54 FR 23963 (June 5, 1989).

[56] *See* Securities Exchange Act Release No. 43268, *supra* note 43. *See also U.S.* v. *American Stock Exchange LLC, et al.*, 2000 WL 33400154 (D.D.C. 2000).

[57] *See* Securities Exchange Act Release No. 41439 (May 24, 1999), 64 FR 29367 (June 1, 1999). The Commission approved the ISE's registration application in 2000. *See* Securities Exchange Act Release No. 42455 (February 24, 2000), 65 FR 11388 (March 2, 2000).

[58] In August 1999, 32% of equity options were traded on more than one exchange. By September 2000, that number had risen to 45%. Securities Exchange Act Release No. 43085 (July 28, 2000), 65 FR 47918 (August 4, 2000) (proposing to extend Exchange Act Rule 11Ac1–1 to options). Over the same period, the percentage of aggregate option volume traded on only one exchange fell from 60% to 15%. *Id.* According to the Options Clearing Corporation, by September 2003, 98.3% of equity options classes traded on more than one exchange. *Id.*

[59] For example, the Boston Options Exchange (''BOX''), a facility of the BSE, commenced trading in 2004. *See* Securities Exchange Act Release No. 49067 (January 14, 2004), 64 FR 2761 (January 21, 2004) (order approving the operating agreement of BOX).

[60] *See* Sections 6(b)(1) and 15A(b)(2) of the Exchange Act, 15 U.S.C. 78f(b)(1) and 78*o*–3(b)(2).

issuers with an opportunity to access capital. This business model understandably would prompt SROs to be concerned with preserving and enhancing their competitive positions. As competition increases among marketplaces and SROs actively pursue strategies to increase their market share, there is a possibility that SROs could face increasing pressure from members and owners with respect to the degree of emphasis placed on their regulatory obligations. In the Commission's view, this factor underscores the need to consider measures that foster and enhance the independence of SROs' governance, the transparency of their processes, and the effectiveness of their regulatory programs.

4. Concerns Relating to New Ownership Structures

Finally, SROs have been challenged by the recent trend to demutualize and reorganize as shareholder-owned entities.[61] SROs historically have been structured as mutual, not-for-profit organizations owned, for the most part, by members that are registered broker-dealers. In 1998, the Commission expressed the view that exchanges could be organized as for-profit entities.[62] Since that time, and especially over the past few years, a number of SROs have demutualized and explicitly separated the right to trade in their markets from the economic ownership rights in those SROs. SROs have put forth various reasons for demutualizing, but common themes are an increased ability to more quickly respond to competitive pressures and additional potential sources of capital.[63]

In addition, some SROs have trading facilities that are owned and operated by persons other than the SRO itself or its members. For example, Archipelago Holdings, Inc. (''Archipelago Holdings'') operates Arca-Ex, the equities trading facility of PCX Equities, and BOX, an options trading facility of the BSE, is operated by the Boston Options Exchange Group, LLC.[64] Demutualized SROs, and separate facilities of SROs, also may choose to become publicly traded companies. For instance, Archipelago Holdings, the parent company of Arca-Ex, recently completed an initial public offering, and ISE has filed a registration statement under the Securities Act of 1933 (''Securities Act'') with regard to its intended initial public offering.[65] In addition, Nasdaq's common stock is publicly traded in the OTC market.

The impact of demutualization is the creation of another SRO constituency—a dispersed group of public shareholders—with a natural tendency to promote business interests. To the extent that a well-regulated market is considered by an SRO's owners to be in their commercial interest, demutualization could better align the goals of SRO owners with their statutory obligations. On the other hand, it could also exacerbate the concern, discussed above, that SROs may put their commercial interests ahead of their responsibilities as regulators. The trend toward demutualization of SROs is yet another reason why the Commission is proposing regulatory changes to better assure the ability of SROs to carry out effectively their regulatory obligations.

The Commission believes that the proposals—summarized above and discussed in detail below—to enhance the governance, administration, transparency and oversight of all SROs would effectively address many of the concerns raised by the demutualization of SROs. In addition, the Commission believes that it is appropriate to consider limits on member ownership of an exchange, association or facility, and heightened procedures in the case of SRO ''self-listing.''

Finally, while the Commission believes that the proposals contained herein would significantly enhance the governance, administration, transparency, and oversight of SROs, legitimate questions remain as to whether more radical structural changes are warranted. Indeed, in addition to the proposals contained in this release, the Commission is today issuing a Concept Release that discusses in detail the strengths and weaknesses of the self-regulatory model and seeks commenters' views on a wide range of issues relating to self-regulation.[66] The Concept Release examines the attributes of the current self-regulatory system, explores additional changes that could be made to the existing system to address the weaknesses of self-regulation, and discusses other models that, if implemented, would require a more extensive restructuring—or elimination—of the current system of self-regulation.[67]

II. Fair Administration and Governance of National Securities Exchanges and Registered Securities Associations

A. Background and Need for Proposed Rules 6a–5 and 15Aa–3

As operators of trading markets, front-line regulators of securities firms, and standard-setters for listed issuers, national securities exchanges and registered securities associations are critical to the integrity of the U.S. securities markets. Recent events have highlighted, however, that the securities industry's system of self-regulation has not always worked as effectively or fairly as it should.[68] In addition, the dual roles of exchanges and associations as both market overseers and market operators, the increased competition among markets, and the growing trend of exchanges to demutualize have raised concerns about their ability and efforts to fulfill their regulatory duties vigorously and impartially.[69] As exchanges and associations continue to face these and other new challenges, the Commission is proposing to address issues of SRO governance and administration, and to explore changes that could foster robust fulfillment of SROs' self-regulatory duties.

Accordingly, the Commission is proposing new Rule 6a–5 under the

[61] *See* Securities Exchange Act Release Nos. 45803 (April 23, 2002), 67 FR 21306 (April 30, 2002) (order approving the restructuring of ISE from a limited liability company to a corporation); 49718 (May 17, 2004), 69 FR 29611 (May 24, 2004) (order approving the demutualization of PCX); and 49098 (January 16, 2004), 69 FR 3974 (January 27, 2004) (order approving the demutualization of Phlx).

[62] *See supra* note 48 (citing to the adopting release for Regulation ATS).

[63] *See* Securities Exchange Act Release Nos. 49451 (March 19, 2004), 69 FR 16305 (March 29, 2004) (PCX stating that by ''restructuring its business as a stock corporation with business control and management vested in a Board of Directors, the entity will have greater flexibility to develop and execute strategies designed to improve its competitive position than it has under the current membership-cooperative structure'' and that it anticipates that ''by restructuring as a stock corporation, PCX management will be better able to respond quickly to competitive pressures and to make changes to its operations as market conditions warrant, without diminishing the integrity of its regulatory programs.'') and 49098, *supra* note 61 (stating that Phlx proposed to effect a demutualization for a number of reasons, including to ''expand its sources of capital and revenue; to facilitate its ability to enter into relationships with strategic or financial partners who may be crucial for the Exchange's future development, capital formation and viability; to facilitate the introduction of new products and thus potentially increase transaction volume and Exchange revenues; and to better position itself to react to new opportunities and challenges'').

[64] *See* Securities Exchange Act Release Nos. 44983, *supra* note 49 and 49067, *supra* note 59.

[65] *See* Securities Exchange Act Release No. 50170 (August 9, 2004), 69 FR 50419 (August 16, 2004) (order approving PCX rule filing relating to the Certificate of Incorporation and Bylaws of Archipelago Holdings) and ISE Registration Statement on Form S–1, File No. 333–117145.

[66] *See* Securities Exchange Act Release No. 50700 (November 18, 2004).

[67] *See id.*

[68] *See supra* Section I.B.

[69] Congress was aware of the conflicting roles faced by exchanges when it designed the regulatory scheme for U.S. securities markets. *See, e.g.,* S. Rep. No. 73–792, at 4–5 (1934); H.R. Rep. No. 73–1383, at 14–16 (1934); and S. Rep. No. 73–1455, at 80–81 (1934).

Exchange Act, which pertains to the fair administration and governance of national securities exchanges, and new Rule 15Aa–3 under the Exchange Act, which pertains to the fair administration and governance of registered securities associations.[70] The proposals would apply to exchanges and associations minimum governance standards that are commensurate with standards required of listed issuers. Among other provisions, the proposed rules would require an exchange's or association's governing board to be composed of a majority of independent directors, with key board committees to be composed solely of independent directors. The Commission believes that the proposed rules would promote a structure that would facilitate the ability of SROs to perform their responsibilities under the Exchange Act with objectivity and vigor. In the Commission's view, proposed Rules 6a–5 and 15Aa–3 would further the goals of the Exchange Act, which, among other things, requires national securities exchanges and registered securities associations to be so organized and have the capacity to carry out the purposes of the Exchange Act.[71] The Commission also believes that by mandating a governance structure that is less susceptible to competing internal interests, proposed Rules 6a–5 and 15Aa–3 would help promote investor confidence in the way in which our securities markets are administered.

The proposed governance rules also would require each exchange and association to separate its regulatory function from its market operations and other commercial interests, whether through functional or organizational separation. Although a premise underlying self-regulation is that regulation works best when it is carried out in proximity to the regulated activity, it is equally important that there be sufficient independence within the self-regulatory process to adequately check undue interference or influence from the persons or entities being regulated. In the Commission's view, the proposed rules would help insulate the regulatory activities of an exchange or association from the conflicts of interest that otherwise may arise by virtue of its market operations.

In addition, the proposed rules would require an exchange or association to establish ownership and voting limitations on the interest of its members that are brokers or dealers in the exchange, association, or a facility of the exchange or association through which the member is permitted to effect transactions. Members who trade on an exchange or through a facility of an exchange or association have traditionally had ownership interests in such exchange or facility. Recent developments, including the trend towards demutualization, have raised the concern that a member's interest could become so large as to cast doubt on whether the exchange or association could fairly and objectively exercise its self-regulatory responsibilities with respect to that member. For example, an exchange may hesitate to diligently monitor and surveil the trading conduct of a member that is a controlling shareholder of the exchange or a facility of the exchange, or to diligently enforce its rules and the federal securities laws with regard to conduct by such member that violates these provisions. The Commission believes that the proposed rules would help mitigate the conflicts of interest that could occur if a member were to control a significant stake in its regulator, and are necessary and appropriate to help ensure that an exchange or association can effectively carry out its statutory obligations under Section 6(b) or 15A(b) of the Exchange Act, respectively.[72]

Finally, the Commission believes that the proposed rules are consistent with, and should enhance, the ''fair representation'' requirements applicable to exchanges and associations. As more fully discussed below, the proposals are designed to reinforce the Exchange Act requirement that the rules of an exchange or association ''assure a fair representation of its members in the selection of its directors and administration of its affairs and provide that one or more directors shall be representative of issuers and investors and not be associated with a member of the exchange [or association], broker, or dealer.'' [73]

B. Description of Proposed Rules 6a–5 and 15Aa–3

1. Scope of Proposed Rules 6a–5 and 15Aa–3

Under proposed Rules 6a–5 and 15Aa–3, each national securities exchange and registered securities association, respectively, would be required to comply with, have rules that comply with, and have the capacity to carry out the purposes of, the provisions of the applicable governance rule.[74] A national securities exchange registered pursuant to Section 6(g)(1) of the Exchange Act,[75] and a limited purpose national securities association registered pursuant to Section 15A(k)(1) of the Exchange Act,[76] would not be subject to these requirements.[77] While the proposed rules would establish minimum standards for the governance and administration of an exchange or association, an exchange or association, of course, could determine to establish more rigorous standards.

Certain provisions of the proposed rules would be applied to any ''regulatory subsidiary'' of the exchange or association in the same manner as they would apply to the exchange or association.[78] The term ''regulatory subsidiary'' would be defined in proposed Rules 6a–5(b)(18) and 15Aa–3(b)(19) as any person that, directly or indirectly, is controlled by the exchange or association and that provides, whether pursuant to contract, agreement or rule, regulatory services [79] to or on behalf of the exchange or association. In recent years, several exchanges, as well as the NASD, have formed subsidiaries and have delegated, pursuant to rules approved by the Commission, to those subsidiaries certain regulatory functions historically conducted by the exchange or the NASD directly.[80] These

[70] Proposed Rules 6a–5 and 15Aa–3 are substantially similar. Rule 15Aa–3(b)(11), however, proposes to define the term ''facility'' for purposes of associations. Currently, the only securities association registered under Section 15A(a) of the Exchange Act, 15 U.S.C. 78o–3(a), is the NASD.

[71] *See* Sections 6(b)(1) and 15A(b)(2) of the Exchange Act, 15 U.S.C. 78f(b)(1) and 78o–3(b)(2).

[72] 15 U.S.C. 78f(b) and 78o–3(b).

[73] 15 U.S.C. 78f(b)(3) and 78o–3(b)(4).

[74] *See* proposed Rules 6a–5(a) and 15Aa–3(a).

[75] 15 U.S.C. 78f(g)(1).

[76] 15 U.S.C. 78o–3(k)(1).

[77] *See* proposed Rules 6a–5(s)(1) and 15Aa–3(s)(1). The Commission does not have primary responsibility for regulating exchanges registered under Section 6(g)(1) of the Exchange Act and national securities associations registered under Section 15A(k)(1) of the Exchange Act (''limited purpose national securities associations''). *See* 15 U.S.C. 78f(g)(1) and 78o–3(k)(1). This responsibility instead lies with the Commodity Futures Trading Commission (''CFTC''). For this reason, such exchanges and associations are exempt from the requirements to file with the Commission proposed rule changes, except for certain specified types of rules. Importantly, exchanges registered under Section 6(g)(1) of the Exchange Act and limited purpose national securities associations are not required to file with the Commission proposed changes to rules related to their governance, ownership, or fulfillment of their self-regulatory responsibilities. Because the Commission does not have primary responsibility for the regulation of these exchanges and associations, the Commission is proposing to exempt such exchanges and associations from proposed Rules 6a–5 and 15Aa–3.

[78] Under paragraph (a) of proposed Rules 6a–5 and 15Aa–3, paragraphs (c), (d), (e), (f), (g), (h), (i), (j), (k), (l), (m), (n), (p), and (q) of the proposed rules would apply to regulatory subsidiaries.

[79] Regulatory services are intended to cover any of those activities that generally would fall within the scope of the SRO's regulatory obligations.

[80] *See, e.g.,* Securities Exchange Act Release Nos. 42759 (May 5, 2000), 65 FR 30654 (May 12, 2000) (order approving creation of PCX Equities, a wholly-owned subsidiary of PCX) and 49065

Continued

subsidiaries remain subject to the self-regulatory authority of the SRO and the SRO ultimately retains responsibility for fulfilling the self-regulatory duties imposed on it by the Exchange Act. To account for the fact that some SROs have delegated regulatory responsibilities under specified conditions to their subsidiaries, exchanges and associations would be required to apply various provisions of the proposed rules to any such subsidiaries, but only to the extent that the subsidiary has a separate governing board and key board committees. Accordingly, this proposal recognizes that a regulatory subsidiary of an exchange or association is an integral part of the SRO, and by carrying out certain self-regulatory duties on behalf of the exchange or association, it should be subject to the same governance standards applicable to the SRO itself.[81]

Each SRO subject to Rule 6a–5 or 15Aa–3 would implement the applicable rule's requirements through rule filings with the Commission pursuant to Section 19(b) of the Exchange Act.[82] SROs are required to file any proposed change in, addition to, or deletion from its rules.[83] A ''stated policy, practice, or interpretation,'' as defined in Rule 19b–4(b)(1) under the Exchange Act,[84] is deemed a proposed rule change, and includes ''any material aspect of the operation of the facilities of the [SRO].'' [85] The Commission believes that any changes made by an SRO to its or any facility's [86] articles of incorporation, constitution, bylaws, and rules, or any instrument corresponding to the foregoing, that relate to or are made to comply with proposed Rules 6a–5 or 15Aa–3 would relate to a material aspect of the operation of the facilities of the exchange or association and therefore would be required to be filed under Section 19(b).[87]

2. Board Consisting of a Majority of Independent Directors

Rules 6a–5 and 15Aa–3 would impose a series of substantive requirements with respect to the composition of the exchange's and association's board [88] that are designed to assure the independence of the board and the fair administration and governance of the exchange or association. To this end, the Commission proposes that the board of each exchange and association be composed of a majority of independent directors.[89] This provision would further the statutory goals that an exchange and association be so organized and have the capacity to carry out the Exchange Act's purposes and to comply, and enforce compliance by members and their associated persons, with the Exchange Act and rules thereunder and the SRO's own rules.[90] We note that this proposal is consistent with accepted corporate governance ''best practices'' regarding board independence.[91] The requirement to have a majority of independent directors also comports with exchange and association rules applicable to listed companies that recently were approved by the Commission to address similar governance concerns and the conflicts of interest that can arise between a company's management and its public shareholders.[92]

The Commission's proposed approach to SRO governance is multi-faceted and multi-pronged. It combines public disclosure of important governance information with guidelines for independent board representation and reliance on totally independent board committees for oversight of critical SRO functions and responsibilities.[93] The proposed rules are designed to enhance the governance of exchanges and associations, while at the same time providing them with a measure of flexibility in determining their own governance models, so long as the minimum requirements are satisfied. SROs, of course, can elect to implement a greater proportion of independent directors.[94]

The Commission believes that requiring SRO boards to have a majority of independent directors, in combination with the other proposed requirements ''for example, the proposed requirement mandating completely independent Standing Committees (as defined below) of the board [95] ''should help address the conflicts of interest that otherwise might arise when persons with a nexus to the SRO are involved in key decisions.[96]

(January 13, 2004), 69 FR 2768 (January 20, 2004) (order approving creation of Boston Options Exchange Regulation, LLC (''BOXR''), a wholly-owned subsidiary of the BSE).

For example, NASD Regulation, Inc. is responsible for carrying out most regulatory functions otherwise within the jurisdiction of the NASD; and the NASD's subsidiary, Nasdaq, pursuant to a plan of delegation, carries out certain regulatory functions on behalf of the NASD. Nasdaq would be subject to proposed Rule 15Aa–3 on two bases: It is both a facility of an association and it is an affiliate that provides regulatory services to or on behalf of the NASD. In addition, the BSE's subsidiary, BOXR, carries out certain regulatory functions on behalf of the BSE; and PCX's subsidiary, PCX Equities, carries out certain regulatory functions on behalf of PCX.

[81] To date, the Commission has permitted an SRO to delegate its regulatory responsibilities only to a subsidiary of the SRO or to another SRO. The SRO that delegates such responsibilities, however, retains primary responsibility for ensuring compliance with the Exchange Act, and rules thereunder, and the rules of the SRO.

[82] 15 U.S.C. 78s(b).

[83] *Id.*

[84] 17 CFR 240.19b–4(b)(1).

[85] *Id.*

[86] The term ''facility'' is defined in Section 3(a)(2) of the Exchange Act and, when used with respect to an exchange, includes its premises, tangible or intangible property whether on the premises or not, any right to the use of such premises or property or any service thereof for the purpose of effecting or reporting a transaction on an exchange (including, among other things, any system of communication to or from the exchange, by ticker or otherwise, maintained by or with the consent of the exchange), and any right of the exchange to the use of any property or service. *See* 15 U.S.C. 78c(a)(2). In many cases, a facility of the exchange is within the same legal entity as the exchange itself and thus only the exchange would need to meet the proposed governance rule's requirements.

The term ''facility,'' when used with respect to an association, would be defined in new Rule 15Aa–3(b)(11) as its premises, tangible or intangible property whether on the premises or not, any right to the use of such premises or property or any service thereof for the purpose of effecting or reporting a transaction (including, among other things, any system of communication to or from the association, by ticker or otherwise, maintained by or with the consent of the association), and any right of the association to the use of any property or service. If a facility of the association is within the same legal entity as the association itself, only the association would need to meet the proposed governance rule's requirements.

[87] For instance, as discussed below in Section II.B.9., an exchange or association would be required to limit its members' interest in a facility of the exchange or association, as well as the exchange or association itself, which may involve changes to the rules of the SRO, including any of the governing documents of the exchange or association, or a facility of the exchange or association.

[88] The term ''board'' would be defined in the proposed rules as the Board of Directors or Board of Governors of the exchange or association, or any equivalent body. *See* proposed Rules 6a–5(b)(5) and 15Aa–3(b)(6).

[89] *See* proposed Rules 6a–5(c)(1) and 15Aa–3(c)(1). The term ''director'' would be defined in proposed Rules 6a–5(b)(8) and 15Aa–3(b)(9) as any member of the board.

[90] *See* Sections 6(b)(1) and 15A(b)(2) of the Exchange Act, 15 U.S.C. 78f(b)(1) and 78*o*–3(b)(2).

[91] *See, e.g.,* James H. Cheek III, *et al., Report of the American Bar Association Task Force on Corporate Responsibility* (2003) (''ABA Task Force Report''); Derek Higgs, *Review of the Role and Effectiveness of Non-Executive Directors* (2003) (''Higgs Report''); and The Business Roundtable, *Principals of Corporate Governance* (May 2002) (''Business Roundtable Report'').

[92] *See, e.g.,* Securities Exchange Act Release No. 48745, *supra* note 28; NYSE *Listed Company Manual* Section 303A.01; and NASD Rule 4350(c)(1).

[93] Because of the unique role played by the SROs and the related conflicts, and in the context of the package of proposals in this release, the Commission at this time has determined to propose a majority independent director requirement for SROs. We are soliciting comment on this proposal. *See also infra* note 191.

[94] The NYSE Constitution, for example, requires that the NYSE's board of directors be entirely independent of the management of the exchange, the membership of the exchange, and issuers of securities listed on the exchange. *See* NYSE Constitution, Article IV, Sec. 2.

[95] *See infra* Section II.B.3. for a discussion on the Standing Committees of the board.

[96] *See, e.g.,* ABA Task Force Report, *supra* note 91, at 31.

These proposals together also should increase the likelihood that exchange and association boards will act in accordance with the mandates of the Exchange Act and in the best interests not only of the SRO and its members or shareholders, but also of the investing public. The Exchange Act sets broad parameters regarding the composition of an exchange's or association's governing body.[97] The proposed rules are intended to provide greater clarity to those statutory provisions.

The exchanges, the NASD, and Nasdaq generally divide their boards between industry [98] and non-industry [99] (including public) [100] directors, with a number of exchanges requiring that at least 50% of the board be composed of public or non-industry directors.[101] The proposed governance rules' definition of independence is based largely on the current notion of a ''public'' director. Like the recently-adopted NYSE and NASD rules for listed issuers,[102] the proposed governance rules also would include specific circumstances that preclude a director from being considered an independent director.[103] The Commission believes that requiring exchanges and associations to adhere to the high standards set forth in the proposed rules should help foster a greater degree of independent decision-making by the exchanges' and associations' governing bodies. In the Commission's view, the proposed rules should promote the goals of the Exchange Act that SROs be so organized and have the capacity to carry out their purposes.[104]

a. Determination of Independence. The proposals would specify that no director may qualify as an independent director unless the board affirmatively determines that the director has no material relationship with the exchange or association.[105] The term ''material relationship'' would be defined as a relationship, whether compensatory or otherwise, that reasonably could affect the independent judgment or decision-making of the director.[106] The proposals would require the board to make this independence determination upon the director's nomination and thereafter no less frequently than annually and as often as necessary in light of the director's circumstances (*e.g.*, a job change or marriage that would disqualify the director from being considered independent).[107] The Commission believes that requiring an exchange's or association's board to make an affirmative determination of independence, and to reevaluate that decision at least annually, would increase the accountability of such board and would further the proposals' goal of requiring the board to be composed of a majority of truly independent directors.[108] The proposed rules would define the term ''independent director'' as a director who has no material relationship with the exchange or association or any affiliate of the exchange or association, any member [109] of the exchange or association or any affiliate of such member, or any issuer of securities that are listed or traded on the exchange or a facility of the exchange or association.[110] The Commission believes that the rigorous proposed definitions of ''independent director'' and ''material relationship'' should help assure that SRO boards are controlled by persons not subject to potential conflicts of interest, and thereby further the goals of Sections 6(b)(1) and 15A(b)(2) of the Exchange Act.[111]

In addition to the general criteria of no material relationship, the proposed rules would identify certain specific circumstances when a director would not be considered independent.[112] A director would not be considered independent if any of the following circumstances existed:

- The director, or an immediate family member,[113] is, or within the past three years was, employed by or otherwise has or had a material relationship with the exchange or association or any affiliate of the exchange or association;[114]
- The director is, or within the past three years was, a member or employed by or affiliated with a member or any affiliate of a member, or the director has an immediate family member that is, or within the past three years was, an executive officer of a member or any affiliate of a member;[115]
- The director, or an immediate family member, has received during any twelve month period within the past three years more than $60,000 in payments from the exchange or association, any affiliate of the exchange or association or from a member or any affiliate of a member; however, payments received in the form of compensation [116] for board or board committee services, compensation to an immediate family member who is not an executive officer of the exchange or association, any affiliate of the exchange or association or of a member or any affiliate of a member, and pension and other forms of deferred compensation for prior services, not contingent on

[97] *See* Sections 6(b) and 15A(b) of the Exchange Act, 15 U.S.C. 78f(b) and 78*o*–3(b).

[98] An ''industry'' director is generally an individual who is an officer, director or employee of a broker or dealer or an affiliate of a broker or dealer, a consultant or employee of the exchange itself, or an exchange permit holder. *See, e.g.*, NASD Bylaws, Articles I(n) and I(o) and Phlx Bylaws, Article I, Section 1–1(m).

[99] A ''non-industry'' director may be an individual who has some relationship with the SRO or the financial services industry; thus, a non-industry director could not be considered truly ''public.'' For example, officers and employees of issuers listed on the exchange are considered non-industry directors. *See, e.g.*, Phlx Bylaws, Article I, Section 1–1(t) and CHX Bylaws, Article III, Section 10(1).

[100] A ''public'' director is generally an individual who has no material business relationship with a broker or dealer or with the exchange or association. *See, e.g.*, NASD Bylaws, Articles I(ee) and I(ff); Phlx Bylaws, Article I, Section 1–1(y); and CHX Bylaws, Article III, Section 10(2).

[101] For example, the BSE's board is composed of the Chairman, the Vice-Chairman and twenty other directors, ten of whom must represent the securities industry and ten of whom must represent the public. *See* BSE Constitution, Article II, Section 1. At least 50% of the directors on PCX's board are required to be persons from the public and cannot be affiliated with a broker or dealer or employed by, or involved in any material business relationship with, PCX or its affiliates. *See* PCX Bylaws, Article III, Section 3.02(a).

[102] *See* Securities Exchange Act Release No. 48745, *supra* note 28; NYSE *Listed Company Manual* Section 303A.02(b); and NASD Rules 4350, 4200(a)(15), and IM–4200.

[103] *See* proposed Rules 6a–5(b)(12) and 15Aa–3(b)(13).

[104] *See* Sections 6(b) and 15A(b) of the Exchange Act, 15 U.S.C. 78f(b) and 78o–3(b).

[105] *See* proposed Rules 6a–5(c)(2) and 15Aa–3(c)(2).

[106] *See* proposed Rules 6a–5(b)(13) and 15Aa–3(b)(14).

[107] *See* proposed Rules 6a–5(c)(2) and 15Aa–3(c)(2).

[108] Moreover, pursuant to proposed changes to exchange and association registration forms, this determination would be required to be disclosed, thereby fostering greater transparency of the SROs' governance processes. *See* proposed revised Form 1 and proposed new Form 2, *infra* Section IV.

[109] For purposes of the proposed governance rules, the term ''member'' has the same meaning as set forth in Section 3(a)(3) of the Exchange Act, 15 U.S.C. 78c(a)(3). *See* proposed Rules 6a–5(b)(14) and 15Aa–3(b)(15).

[110] *See* proposed Rules 6a–5(b)(12) and 15Aa–3(b)(13). *See also* infra note 230 (for a definition of ''affiliate'').

[111] 15 U.S.C. 78f(b)(1) and 78*o*–3(b)(2). *See generally* Sections 6(b) and 15A(b) of the Exchange Act, 15 U.S.C. 78f(b) and 78*o*–3(b).

[112] *See* proposed Rules 6a–5(b)(12) and 15Aa–3(b)(13).

[113] The term ''immediate family member'' would be defined in the proposed rules as a person's spouse, parents, children, and siblings, whether by blood, marriage, or adoption, or anyone residing in such person's house. *See* proposed Rules 6a–5(b)(11) and 15Aa–3(b)(12).

[114] *See* proposed Rules 6a–5(b)(12)(i) and 15Aa–3(b)(13)(i).

[115] *See* proposed Rules 6a–5(b)(12)(ii) and 15Aa–3(b)(13)(ii).

[116] *See* proposed Rules 6a–5(b)(6) and 15Aa–3(b)(7) for the definition of the term ''compensation.''

continued service, would not disqualify a director as independent;[117]

• The director, or an immediate family member, is a partner in, or controlling [118] shareholder or executive officer of, any organization to which, or from which, the exchange or association or any affiliate of the exchange or association made or received payments for property or services in the current or any of the past three full fiscal years that exceed 2% of the recipient's consolidated gross revenues for that year, or $200,000, whichever is more, other than certain payments arising solely from investments in the securities of the exchange or association or any facility or affiliate of the exchange or association or payments under non-discretionary charitable contribution matching programs;[119]

• The director, or an immediate family member, is, or within the past three years was, an executive officer of an issuer of securities listed or primarily traded on the exchange or a facility of the exchange or association;[120]

• The director, or an immediate family member, is, or within the past three years was, employed as an executive officer of another entity where any of the exchange's or association's executive officers serve on that entity's compensation committee;[121]

• The director, or an immediate family member, is a current partner of the outside auditor of the exchange or association or any affiliate of the exchange or association, or was a partner or employee of the outside auditor of the exchange or association or any affiliate of the exchange or association who worked on the audit of the exchange or association or any affiliate of the exchange or association, at any time within the past three years; [122] or

• In the case of a director that is a member of the Audit Committee,[123] such director (other than in his or her capacity as a member of the Audit Committee, the board, or any other board committee), accepts, directly or indirectly, any consulting, advisory, or other compensatory fee from the exchange or association, any affiliate of the exchange or association, or a member or any affiliate of a member, other than fixed amounts of pension and other forms of deferred compensation for prior service, provided such compensation is not contingent in any way on continued service.[124]

The Commission believes that the proposed circumstances that would preclude a determination of a director's independence—in effect, concluding that a ''material relationship'' exists under certain circumstances—should better assure that a majority of an SRO's board is truly independent, and thus should promote the statutory requirement that SROs be so organized and have the capacity to carry out the Exchange Act's purposes.[125] The proposed circumstances that would preclude a director from being considered independent are similar to criteria that are contained in SRO listing standards, which recently were approved by the Commission and are designed to address similar governance concerns and the conflicts of interest that can arise between a company's management and its public shareholders.[126] For example, the three-year look-back provision [127] is a feature of NYSE, NASD, and Amex rules for listed issuers;[128] the $60,000 restriction on payments received and the 2%/$200,000 threshold for payments received or made for property or services [129] are similar to factors contained in NASD and Amex listing rules;[130] and the definition of ''immediate family member [131] is substantially the same as the definition of the term ''family member'' in the NASD's listing rules.[132] The Commission further notes that because SROs are member organizations and operate markets with listing requirements, the proposed rules would take into account specific relationships between the director and a member or listed company that could challenge the impartiality of the director.[133]

In the Commission's view, the proposed relationship tests that would preclude a determination that a director is independent strike an appropriate balance and promote the goal of providing clear standards regarding the determination of independence.[134] The Commission believes that these criteria are indicative of whether directors can reach independent decisions that affect the SRO without competing pressures or conflicts of interest. For example, the fact that a director was an executive officer of a listed issuer more than three years prior to his or her nomination to the board is unlikely to have an influence on his or her decisions as a board member. On the other hand, a director's recent employment with a member does raise such concerns and would preclude a finding that he or she is independent. The Commission believes that these specific circumstances appropriately identify those relationships, such as recent employment, a business or financial relationship, or family ties, that are likely to impair the independence of a director. Further, there are practical reasons for relying on criteria that are similar to factors currently in place at the SROs for their listed issuers, as the SROs already are experienced in

[117] *See* proposed Rules 6a–5(b)(12)(iii) and 15Aa–3(b)(13)(iii). The Commission believes that compensation received as deferred compensation for prior service should not by itself exclude a director from being considered independent. However, the director would still need to satisfy the core definition of independence contained in the proposed rules.

[118] *See* proposed Rules 6a–5(b)(7) and 15Aa–3(b)(8) for the definition of the term ''control.''

[119] *See* proposed Rules 6a–5(b)(12)(iv) and 15Aa–3(b)(13)(iv).

[120] *See* proposed Rules 6a–5(b)(12)(v) and 15Aa–3(b)(13)(v).

[121] *See* proposed Rules 6a–5(b)(12)(vi) and 15Aa–3(b)(13)(vi).

[122] *See* proposed Rules 6a–5(b)(12)(vii) and 15Aa–3(b)(13)(vii).

[123] *See infra* Section II.B.3. for a discussion of the Audit Committee.

[124] *See* proposed Rules 6a–5(b)(12)(viii) and 15Aa–3(b)(13)(viii). This requirement is commensurate with an independence requirement for non-investment company issuers contained in Rule 10A–3(b)(1)(ii) under the Exchange Act, 17 CFR 240.10A–3(b)(1)(ii), which pertains to listing standards relating to audit committees. The proposed requirement is designed to help assure that there are no fee arrangements between the exchange or association or any of its affiliates and the Audit Committee member that would impair the independence of the Audit Committee member.

[125] *See* Sections 6(b)(1) and 15A(b)(2) of the Exchange Act, 15 U.S.C. 78f(b)(1) and 78o–3(b)(2).

[126] *See, e.g.*, Securities Exchange Act Release Nos. 48745, *supra* note 28 and 48863 (December 1, 2003), 68 FR 68432 (December 8, 2003) (order approving governance standards for issuers of securities listed on Amex).

[127] *See* proposed Rules 6a–5(b)(12)(i) through (vii) and 15Aa–3(b)(13)(i) through (vii).

[128] *See* NYSE *Listed Company Manual* Section 303A.02(b); NASD Rules 4350, 4200(a)(15), and IM–4200; and Amex *Company Guide,* Part I, Section 121A.

[129] *See* proposed Rules 6a–5(b)(12)(iii) and (iv) and 15Aa–3(b)(13)(iii) and (iv).

[130] *See* NASD Rules 4350, 4200(a)(15), and IM–4200 and Amex *Company Guide,* Part I, Section 121A.

[131] *See* proposed Rules 6a–5(b)(11) and 15Aa–3(b)(12).

[132] *See* NASD Rule 4200(a)(14).

[133] For example, the proposed governance rules state that a director would not be considered independent in the circumstance where a director is, or within the past three years was, a member or employed by or affiliated with a member, or the director has an immediate family member that is, or within the past three years was, an executive officer of a member or any affiliate of a member. Similarly, a director would not be considered independent in the circumstance where a director, or an immediate family member, is or within the past three years was an executive officer of an issuer of securities listed or primarily traded on the exchange or a facility of the association. *See* proposed Rules 6a–5(b)(12)(ii) and (iv) and 15Aa–3(b)(13)(ii) and (iv).

[134] *See, e.g.*, Higgs Report, *supra* note 91, at 37 and Richard C. Breeden, *Restoring Trust: Report on Corporate Governance for the Future of MCI, Inc.* (August 2002) (''Breeden Report''), at 61.

interpreting and applying those standards. The Commission emphasizes that the absence of any of the proposed relationship tests, of course, would not necessarily result in a determination of independence, as the board must still affirmatively determine that the director has no material relationship with the SRO.

b. Independent Board Requirements. The proposed governance rules would require exchanges and associations to establish policies and procedures to require each director, on his or her own initiative and upon request of the exchange or association, to inform the exchange or association of the existence or establishment of any relationship or interest that may reasonably be considered to bear on whether such director is an independent director.[135] Exchanges and associations also would be required to establish procedures for interested persons to communicate their concerns relating to any matter within the authority or jurisdiction of a Standing Committee directly to the independent directors.[136]

The proposed governance rules also would require that at least 20% of the total number of directors be selected by members.[137] In addition, the proposed governance rules would require that at least one director be representative of issuers and at least one director be representative of investors and, in each case, such director must not be associated with a member or broker or dealer.[138] The Commission believes that these provisions are consistent with the ''fair representation'' and ''issuer and investor representation'' requirements of the Exchange Act, which are discussed below.[139]

Further, the proposed governance rules would require that when the board of an exchange or association considers any matter that is recommended by or otherwise is within the authority or jurisdiction of a Standing Committee, a majority of the directors who vote on the matter must be independent directors.[140] For example, assume an exchange has a board composed of nine independent directors and eight non-independent directors. If two independent directors do not participate in a board meeting but all the non-independent directors participate in such meeting, the matter could be voted upon only by the seven independent directors present and six of the eight non-independent directors present.[141] This proposal is intended to preserve and bolster the requirement that the majority of the board be independent, and is designed to assure that matters before the board that are within the authority or jurisdiction of the fully-independent Standing Committees are considered by and voted on by a majority of independent directors.

In addition, the proposed governance rules would require that if the exchange or association fails to comply with the requirement that the board be composed of a majority of independent directors because there is a vacancy on the board or a director ceases to be independent, the exchange or association must remedy such non-compliance by the earlier of the exchange's or association's next annual meeting or one year from the date of the occurrence of the event that caused the non-compliance.[142] This provision is consistent with the standard imposed on listed issuers and, in our view, should assure prompt remediation, yet provide exchanges and associations with a reasonable period of time, consistent with their governance procedures, to cure any failure to satisfy the majority independence requirement.

c. Fair Representation. Section 6(b)(3) of the Exchange Act requires that the rules of an exchange assure a fair representation of its members in the selection of its directors and administration of its affairs (''fair representation requirement''), and must provide that one or more directors be representative of issuers and investors and not be associated with a member of the exchange, broker or dealer (''issuer and investor representation requirements'').[143] Section 15A(b)(4) of the Exchange Act contains an identical requirement with respect to the rules of an association.[144]

Consistent with the fair representation requirement, the proposed governance rules would require that the Nominating Committee [145] administer a fair process that provides members [146] with the opportunity to select at least 20% of the total number of directors (''member candidates'').[147] This requirement is not intended to prohibit exchanges and associations from having boards composed solely of independent directors. If an exchange's or association's board is composed wholly of independent directors, the candidate or candidates selected by members would have to be independent. This ''20% standard'' for member candidates comports with previously-approved SRO rule changes that raised the issue of fair representation.[148] The Commission preliminarily believes that the proposed 20% requirement strikes a proper balance by giving members a practical voice in the governance of the exchange or association and the administration of its affairs, without jeopardizing the overall independence of the board.

An exchange or association would have some leeway in implementing the fair process for members to select board candidates. For example, the Commission believes that the exchange or association would have a fair process if it established an advisory panel of members that reports to the Nominating Committee, and that is directly responsible for nominating member candidates for the board. Another type of fair process would be for the member advisory panel to make recommendations to the Nominating Committee, with the Nominating Committee required to nominate the member candidates identified by the member advisory panel. The member candidates, of course, would be required to satisfy all relevant eligibility criteria for directors (including independence requirements, if applicable). The fair process must also ensure that the member candidates actually are provided seats on the board.

[135] *See* proposed Rules 6a–5(c)(3) and 15Aa–3(c)(3).

[136] *See* proposed Rules 6a–5(c)(9) and 15Aa–3(c)(9).

[137] *See* proposed Rules 6a–5(c)(4) and 15Aa–3(c)(4). *See infra* Section II.B.2.c. for a discussion of the statutory ''fair representation'' requirement.

[138] *See* proposed Rules 6a–5(c)(5) and 15Aa–3(c)(5).

[139] *See infra* Section II.B.2.c.

[140] *See* proposed Rules 6a–5(c)(6) and 15Aa–3(c)(6). *See infra* Section II.B.3. for a discussion of the Standing Committees of the board.

[141] Each SRO with non-independent directors would have to establish procedures for determining which non-independent directors would vote under such circumstances, consistent with the ''fair representation'' requirements discussed below.

[142] *See* proposed Rules 6a–5(c)(8) and 15Aa–3(c)(8).

[143] 15 U.S.C. 78f(b)(3).

[144] 15 U.S.C. 78*o*–3(b)(4).

[145] *See infra* Section II.B.3. for a discussion of the fully-independent Nominating Committee.

[146] *See supra* note 109 for the definition of the term ''member.''

[147] *See* proposed Rules 6a–5(f)(3) and 15Aa–3(f)(3).

[148] *See* Securities Exchange Act Release Nos. 48946, *supra* note 36 and 49718, *supra* note 61. The Commission notes that it previously has taken the position that the fair representation requirement could be satisfied if the exchange's or association's rules provided that members constitute at least 20% of the individuals serving on the Nominating Committee. *See, e.g.*, Securities Exchange Act Release Nos. 49098 and 49718, *supra* note 61. Because the proposed governance rules would mandate that the Nominating Committee consist solely of independent directors, an exchange or association no longer would have the option of satisfying the fair representation requirement by having at least 20% member representation on its Nominating Committee. Although the Commission previously approved SRO proposals that allowed members to constitute at least 20% of the exchange's or association's Nominating Committee, the Commission now believes that the governance of exchanges and associations would be strengthened by requiring a fully independent Nominating Committee.

To further address the fair representation requirement, proposed Rules 6a–5(c)(7) and 15Aa–3(c)(7) would require exchanges and associations to adopt rules to establish a fair process for the nomination of alternative candidates by members through a petition process. This requirement would provide members with the means to nominate one or more alternative candidates representative of members. The percentage of members that is necessary to put forth such alternative member candidate or candidates would be required to be specified in the exchange's or association's rules, and could not exceed 10% of the total number of members.[149] The Commission believes that this 10% requirement strikes an appropriate balance in that it provides members a practical mechanism to put forth alternative candidates, without jeopardizing the overall integrity of the nominating process. The Nominating Committee would be required to administer the petition process established by the exchange's or association's rules.[150]

To address the issuer and investor representation requirement, the Nominating Committee would be required to nominate at least one director who is representative of issuers and at least one director who is representative of investors and who, in each case, is not associated with a member or broker or dealer.[151] This provision simply would codify in Commission rules the requirements set forth in Sections 6(b)(3) and 15A(b)(4) of the Exchange Act.[152]

The Commission notes that it recently approved the NYSE's proposal to establish a fully independent board, finding that such a board could be consistent with the Exchange Act and the fair representation and issuer and investor representation requirements.[153] As discussed above, the Commission only is proposing to require exchanges and associations to elect majority-independent boards, although an SRO may elect to impose a more rigorous requirement. The Commission believes that an exchange's or association's board could be wholly-independent based on the independence criteria contained in the proposed governance rules, provided that its rules satisfy the fair representation requirement and issuer and investor representation requirements (*i.e.*, by requiring that at least 20% of the independent directors are selected by members, that at least one independent director is representative of issuers, and at least one independent director is representative of investors).

3. Standing Committees

Recent developments have highlighted the critical role that board committees play in the governance of exchanges and associations and the importance of having key committees function independently of the pressures that otherwise could be exerted on them by management, members or other interested parties.[154] The Commission is proposing that each exchange and association, at a minimum, have the following standing committees, or their equivalent: Nominating Committee; Governance Committee; Compensation Committee; Audit Committee; and Regulatory Oversight Committee (collectively, ''Standing Committees'').[155] The proposed governance rules also would require that each Standing Committee be composed solely of independent directors.[156] The Commission preliminarily believes that the functions to be performed by these committees are important to the effective administration of an exchange or association. Moreover, these are the committees that generally are charged with overseeing the SRO's regulatory responsibilities, including the SRO's commitment of financial resources to fund those responsibilities. Thus, the Commission believes that requiring all of the members of these Standing Committees to be independent would result in a greater degree of objective decision-making with respect to the exchange's or association's core responsibilities and would further the Exchange Act's goal that SROs be so organized and have the capacity to carry out their self-regulatory obligations.[157]

The proposed governance rules would require each Standing Committee to have the authority to direct and supervise inquiries into any matter brought to its attention within the scope of its duties and to obtain advice and assistance from independent legal counsel and other advisors as it determines necessary to carry out its duties.[158] In addition, each Standing Committee, other than the Governance Committee, would be required to conduct an annual performance self-evaluation.[159] Rather than conduct an annual self-evaluation of the committee's performance, the Governance Committee would be required to conduct an annual performance evaluation of the governance of the exchange or association as a whole, including the effectiveness of the board and its committees.[160] The Commission believes that these self-evaluations should assist the exchange or association in identifying strengths and deficiencies in the governance, administration, regulatory programs,

[149] *See* proposed Rules 6a–5(c)(7) and 15Aa–3(c)(7). SROs currently have rules that permit members to engage in a petition process to nominate candidates. For example, pursuant to Phlx rules, members representing not less than 50 votes may, by written petition, independently nominate an individual for the position of on-floor governor, and members representing not less than 75 votes may propose an entire ticket, or any portion thereof, for on-floor governor positions which are vacant. *See* Phlx Bylaws, Article III, Section 3–7. A similar process is employed at the NYSE where members may propose by written petition potential nominees for positions to be filled at elections. Any such nominee must be endorsed by not less than 40 members, and not less than 100 members may petition for an entire ticket, or any portion thereof. *See* NYSE Constitution, Article III, Section 1.

[150] *See* proposed Rules 6a–5(f)(3) and 15Aa–3(f)(3).

[151] *See* proposed Rules 6a–5(f)(4) and 15Aa–3(f)(4). For example, the Nominating and Governance Committee of the NYSE currently is required to recommend to the board at least one individual who is representative of issuers and at least one individual who is representative of investors. *See* NYSE Constitution, Article IV, Sections 2 and 12.

[152] 15 U.S.C. 78f(b)(3) and 78*o*–3(b)(4).

[153] *See* Securities Exchange Act Release No. 48946, *supra* note 36.

[154] *See supra* Section I.B.

[155] *See* proposed Rules 6a–5(b)(21) and (e)(1) and 15Aa–3(b)(22) and (e)(1). An SRO would not be precluded from allowing a single committee to carry out the functions of two Standing Committees as long as the committee consisted solely of independent directors, *e.g.*, the functions of the Nominating Committee and the Governance Committee could be carried out by a single committee. Also, to the extent that a Standing Committee of the exchange or association carries out responsibilities on behalf of a regulatory subsidiary, the regulatory subsidiary would not be required to have a Standing Committee that performs the same functions. *See* proposed Rules 6a–5(a) and 15Aa–3(a).

[156] *See* proposed Rules 6a–5(f)(1), (g)(1), (h)(1), (i)(1), and (j)(1) and 15Aa–3(f)(1), (g)(1), (h)(1), (i)(1), and (j)(1). This provision is consistent with the recommendations in the Higgs Report, ABA Task Force Report and the Breeden Report. *See* Higgs Report, *supra* note 91, at 60–61; ABA Task Force Report, *supra* note 91, at 63–67; and Breeden Report, *supra* note 134, at 103.

[157] *See* Sections 6(b)(1) and 15A(b)(2) of the Exchange Act, 15 U.S.C. 78f(b)(1) and 78*o*–3(b)(2).

[158] *See* proposed Rules 6a–5(e)(2) and 15Aa–3(e)(2). The Business Roundtable Report noted that it may be appropriate for boards and committees to seek advice from outside advisors and that board and committee access to outside advisors is an important element of corporate governance. *See* Business Roundtable Report, *supra* note 91, at 27–28.

[159] *See* proposed Rules 6a–5(f)(5), (h)(3), (i)(3) and (j)(6) and 15Aa–3(f)(5), (h)(3), (i)(3) and (j)(6). The proposed rules would require each exchange and association to provide sufficient funding and other resources, as determined by each Standing Committee, to permit the Standing Committees to fulfill their responsibilities and to retain independent legal counsel and other advisors. *See* proposed Rules 6a–5(e)(3) and 15Aa–3(e)(3).

[160] *See* proposed Rules 6a–5(g)(3) and 15Aa–3(g)(3).

and financial matters of the exchange or association.[161]

In order to function effectively, each Standing Committee would need to be clear as to its role. Accordingly, the proposed rules would require that each Standing Committee have a written charter that addresses such committee's purpose and responsibilities, which, at a minimum, must be as follows:

• Nominating Committee: to identify individuals qualified to become board members, consistent with criteria approved by the board and administer a process for the nomination of individuals to the board.[162]

• Governance Committee: to develop and recommend to the board a set of governance principles applicable to the exchange or association and to oversee the evaluation of the board and management.[163]

• Compensation Committee: to have direct responsibility to review and approve corporate goals and objectives relevant to the compensation of the executive officers of the exchange or association; evaluate the performance of the executive officers in light of those goals and objectives; and consider and approve recommendations with respect to the compensation level of the executive officers, based on this evaluation.[164]

• Audit Committee: to assist the board in oversight of the integrity of the exchange's or association's financial statements; the exchange's or association's compliance with related legal and regulatory requirements; the qualifications and independence of the exchange's or association's auditor, including direct responsibility for the hiring, firing, and compensation of the auditor, overseeing the auditor's engagement, meeting regularly in executive session with the auditor, reviewing the auditor's reports with respect to the exchange's or association's internal controls, and pre-approving all audit and non-audit services performed by the auditor; determining the budget and staffing of the exchange's or association's internal audit department; and establishing procedures for the receipt of complaints regarding accounting, internal accounting controls, or auditing matters of the exchange or association and the confidential submission by employees of the exchange or association of concerns regarding questionable accounting or auditing matters.[165]

• Regulatory Oversight Committee: to assure the adequacy and effectiveness of the exchange's or association's regulatory program; assess the exchange's or association's regulatory performance; determine the regulatory plan, programs, budget, and staffing for the regulatory functions of the exchange or association; assess the performance of, and recommend compensation and personnel actions involving, the Chief Regulatory Officer[166] and other senior regulatory personnel[167] to the Compensation Committee; monitor and review regularly with the Chief Regulatory Officer matters relating to the exchange's or association's surveillance, examination, and enforcement units; assure that the exchange's or association's disciplinary and arbitration proceedings are conducted in accordance with the exchange's or association's rules and policies and any other applicable laws or rules, including those of the Commission; prior to the exchange's or association's approval of an affiliated security[168] for listing, certify that such security meets the exchange's or association's rules for listing; and approve any reports filed with the Commission as required by proposed Regulation AL (§ 242.800).[169]

The Commission believes that the foregoing proposed responsibilities of the Standing Committees would foster the effectiveness of such committees and further the objective of good governance on the part of SROs. Exchanges and associations, of course, could elect to assign additional responsibilities to the Standing Committees, as long as they were otherwise consistent with the proposed governance rules.

In addition, any committee, subcommittee, or panel that is responsible for conducting hearings, rendering decisions, and imposing sanctions with respect to disciplinary matters would be subject to the jurisdiction of the Regulatory Oversight Committee.[170] Although the Regulatory Oversight Committee would be required to be composed solely of independent directors,[171] the Commission believes that, to satisfy the fair representation requirement, the exchange or association must provide for member participation on any committee, subcommittee, or panel that is responsible for conducting hearings, rendering decisions, and imposing sanctions with respect to member disciplinary matters.[172] In order to satisfy this requirement, the proposal would require that at least 20% of the members of any such committee, subcommittee, or panel be members of the exchange or association.[173] The Commission believes that this provision furthers the requirement of the Exchange Act that an exchange or association assure a fair representation of members in the administration of its affairs.[174] By proposing to require members to be represented on bodies that consider disciplinary matters relating to members, members would be assured input into a key aspect of SRO administration that is of critical importance to them. The Commission believes that the proposed 20% requirement would provide members with a practical voice in disciplinary matters without compromising the overall independence of the disciplinary process, which would be overseen by

[161] The ABA Task Force Report recommended periodic evaluations by the directors of the effectiveness and adequacy of meetings of the board and its committees. *See* ABA Task Force Report, *supra* note 91, at 72. The Business Roundtable Report similarly recommended that the ''performance of the full board should be evaluated annually, as should the performance of its committees,'' to allow the board to determine whether it and its committees were following the procedures necessary to function effectively. *See* Business Roundtable Report, *supra* note 91, at 28.

[162] *See* proposed Rules 6a–5(f)(2) and 15Aa–3(f)(2).

[163] *See* proposed Rules 6a–5(g)(2) and 15Aa–3(g)(2).

[164] *See* proposed Rules 6a–5(h)(2) and 15Aa–3(h)(2).

[165] *See* proposed Rules 6a–5(i)(2) and 15Aa–3(i)(2). The complaint procedures for the Audit Committee are commensurate with the complaint procedures contained in Rule 10A–3(b)(3) under the Exchange Act, 17 CFR 240.10A–3(b)(3), which pertain to audit committees of listed issuers.

[166] *See* proposed Rules 6a–5(n)(3) and 15Aa–3(n)(3), which would require exchanges and associations to appoint a Chief Regulatory Officer. *See also infra* Section II.B.8.a.

[167] ''Senior regulatory personnel'' means those individuals, including the proposed Chief Regulatory Officer, who are the senior managers of the SRO's regulatory program.

[168] The term ''affiliated security'' is proposed to be defined as any security issued by an affiliated issuer, except that it would not include any option exempt from the Securities Act pursuant to Rule 238 thereunder, 17 CFR 230.238, and any security futures product exempt from the Securities Act pursuant to Section 3(a)(14) thereof, 15 U.S.C. 77c(a)(14). *See* proposed Rules 6a–5(b)(3) and 15Aa–3(b)(3). An ''affiliated issuer'' is proposed to be defined to mean an exchange, an association, an SRO trading facility of the exchange or association, an affiliate of the exchange or association, or an affiliate of an SRO trading facility of the exchange or association. *See* proposed Rules 6a–5(b)(2) and 15Aa–3(b)(2). ''SRO trading facility'' is proposed to be defined in proposed Rules 6a–5(b)(20) and 15Aa–3(b)(21) as any facility of a national securities exchange or registered securities association, respectively, that executes orders in securities.

[169] *See* proposed Rules 6a–5(j)(2) and 15Aa–3(j)(2). *See infra* Section III. for a discussion of proposed Regulation AL.

[170] *See* proposed Rules 6a–5(j)(4) and 15Aa–3(j)(4).

[171] *See* proposed Rules 6a–5(j)(1) and 15Aa–3(j)(1).

[172] *See* proposed Rules 6a–5(j)(3) and 15Aa–3(j)(3).

[173] *See id.*

[174] *See* Sections 6(b)(3) and 15A(b)(4) of the Exchange Act, 15 U.S.C. 78f(b)(3) and 78*o*–3(b)(4).

the fully independent Regulatory Oversight Committee, or the ability of the exchange or association to carry out its obligations under the Exchange Act. The Commission notes that this 20% standard is consistent with prior SRO proposals that were approved by the Commission and that provided members with a voice in the exchange's or association's disciplinary process.[175] The Commission notes, however, that unlike previously-approved structures, the proposal would require any committee, subcommittee, or panel containing members to report to the fully-independent Regulatory Oversight Committee. This requirement would be necessary because the Regulatory Oversight Committee, which is proposed to be fully independent, is intended to be the committee responsible for oversight of regulatory matters, including disciplinary matters.

The Regulatory Oversight Committee also would be required to oversee the preparation of the exchange's or association's annual regulatory report, as required by proposed Rule 17a–26 of the Exchange Act.[176]

4. Other Committees of the Board

The proposed governance rules would permit an exchange or association to establish such other committees of the board as it determines to be appropriate; however, if such committee has the authority to act on behalf of the board, that committee would be required to be composed of a majority of independent directors.[177] For example, if the exchange or association has established an Executive Committee that is empowered to act on the board's behalf, such committee would be required to be composed of a majority of independent directors. Further, the exchange or association could not delegate to any committee not consisting solely of independent directors the authority to act on matters that otherwise are within the jurisdiction of a Standing Committee.[178]

In addition, the Commission is proposing that at least 20% of the persons serving on any committee that is not a Standing Committee and any committee, subcommittee, or panel that is subject to the jurisdiction of a Standing Committee, and that is responsible for providing advice with respect to trading rules or disciplinary rules, be members of the exchange or association.[179] The Commission believes that, consistent with the Exchange Act's fair representation requirement, members should be provided with the opportunity to formally provide input on the development of, or changes to, trading and disciplinary rules. Rulemaking in this area is a key aspect of SRO administration and can have a significant impact on members. The Commission preliminarily believes that, as in prior contexts, the 20% requirement affords members a practical voice in the formulation of rules important to them. The Commission notes that it has previously approved SRO proposed rule changes that provide members with a role in developing rules relating to trading and disciplinary matters.[180]

5. Other Requirements Applicable to Directors and Officers

The duties and responsibilities imposed by the Exchange Act on exchanges and associations make clear that these SROs are charged with an important public trust and play an integral role in, among other things, maintaining securities markets that are free from fraudulent or manipulative acts or practices and that promote just and equitable principles of trade.[181] Exchanges and associations also are charged with appropriately disciplining their members pursuant to fair procedures.[182] To further these and other statutorily-imposed requirements applicable to exchanges and associations, the proposed governance rules would require that the rules of the exchange or association prohibit a person subject to any statutory disqualification, within the meaning of Section 3(a)(39) of the Exchange Act,[183] from being a director or officer of the exchange or association.[184] The Commission believes that the integrity of the exchange or association—as well as its ability to perform its statutorily required functions—could be seriously undermined if individuals subject to these serious regulatory or legal sanctions were permitted to serve on the board or as an officer of the exchange or association.

In addition, the proposed rules would require exchanges and associations to explicitly mandate that each director, in discharging his or her responsibilities as a member of the board, reasonably consider all requirements applicable to the exchange or association under the Exchange Act.[185] Exchanges and associations, as regulated entities, have certain obligations under the Exchange Act,[186] and their directors must take these obligations into account when discharging their responsibilities. We note that directors have fiduciary obligations under state law. The Commission believes, however, that expressly requiring directors to take into account the exchange's or association's obligations under the Exchange Act should help promote greater awareness and accountability on the part of directors, thus furthering the objectives of the Exchange Act.

6. Executive Sessions of the Board

The Commission believes that independent directors must be provided with the opportunity to discuss any important matters regarding the exchange or association in a frank and open manner, free from the presence of management.[187] Therefore, the Commission proposes that the independent directors of the exchange's or association's board meet regularly in executive session.[188] The Commission, however, is not proposing a minimum frequency for the independent directors to meet regularly in executive session;

[175] *See, e.g.*, Securities Exchange Act Release Nos. 50057 (July 22, 2004), 69 FR 45091 (July 28, 2004) (notice of filing of proposed rule change including to require that the Amex Adjudicatory Council, which has the authority to act for the Amex Board of Governors with respect to, among other things, any appeal or review of a disciplinary proceeding, be composed of three industry governors and three independent governors) and 49718, *supra* note 61 (order approving the proposed rules pertaining to the demutualization of PCX and finding that permit holders would retain a voice in the administration of the affairs of the reorganized PCX, including the rulemaking and the disciplinary process, through participation on various committees).

[176] *See* proposed Rules 6a–5(j)(5) and 15Aa–3(j)(5); proposed Rule 17a–26. *See infra* Section V. for a discussion of proposed Rule 17a–26.

[177] *See* proposed Rules 6a–5(k)(1) and 15Aa–3(k)(1).

[178] *See id.*

[179] *See* proposed Rules 6a–5(k)(2) and 15Aa–3(k)(2).

[180] *See, e.g.*, Securities Exchange Act Release No. 49718, *supra* note 61 (order approving the PCX Options Trading Permit Advisory Committee, which among other things, acts in an advisory capacity regarding rule changes related to disciplinary matters and trading rules and which must be made up entirely of options trading permit holders).

[181] *See* Sections 6(b)(5) and 15A(b)(6) of the Exchange Act, 15 U.S.C. 78f(b)(5) and 78*o*–3(b)(6).

[182] *See* Sections 6(b)(6)–(7) and 15A(b)(7)–(8) of the Exchange Act, 15 U.S.C. 78f(b)(6)–(7) and 78*o*–3(b)(7)–(8).

[183] 15 U.S.C. 78c(a)(39).

[184] *See* proposed Rules 6a–5(l)(1) and 15Aa–3(l)(1).

[185] *See* proposed Rules 6a–5(l)(2) and 15Aa–3(l)(2).

[186] *See, e.g.*, 15 U.S.C. 78f(b) and 78*o*–3(b).

[187] *See* ABA Task Force Report, *supra* note 91, at 63; Breeden Report, *supra* note 134, at 52; and Higgs Report, *supra* note 91, at 34.

[188] *See* proposed Rules 6a–5(d)(1) and 15Aa–3(d)(1). The proposed governance rules would define ''executive session'' as a meeting of independent directors of the board, without the presence of either management of the exchange or association or directors who are not independent directors. *See* proposed Rules 6a–5(b)(9) and 15Aa–3(b)(10).

rather, it is leaving this decision to the board, to be based on the facts and circumstances of the particular exchange or association.

The proposed governance rules also would require that independent directors have the authority to direct and supervise inquiries into any matter brought to their attention within the scope of their duties, and to obtain advice and assistance from independent legal counsel and other advisors, as they determine necessary to carry out their duties.[189] Accordingly, the proposed governance rules would require that the exchange or association provide sufficient funding and other resources, as determined by the independent directors, to permit the independent directors to fulfill their responsibilities and to retain independent legal counsel and other advisors.[190] The Commission believes that the proposed governance rules should provide independent directors with the ability to serve effectively, including assuring that they have adequate resources and funding to perform their duties. In addition, authorizing independent directors to utilize independent legal counsel and other advisors is important to permit them to have access to advice from independent sources before acting on significant matters affecting the exchange or association.

7. Separation of Chairman of the Board and CEO Positions

The Commission is not proposing to require that an exchange's or association's Chairman of the board be an independent director in all circumstances.[191] However, if the exchange's or association's CEO is not also the Chairman, we are proposing that the Chairman must be an independent director.[192]

The proposed rules, including the provisions related to the Chairman and CEO, are designed to foster a greater degree of independent decision-making by the governing body of an exchange or association. However, while recognizing the benefits of independence, the Commission understands that some SROs may perceive efficiencies in having one person serve as Chairman and CEO, and therefore the Commission is not proposing to prohibit this arrangement. In this regard, the Commission notes that both the NYSE and BSE currently have separate individuals serving as the Chairman and as the CEO of the exchange, although the exchanges' governing documents do not expressly require this separation.[193] Nevertheless, in the event that an exchange or association elects to have a single individual serve as Chairman and CEO, the proposed governance rules would prohibit that person—who, as the CEO, would not be ''independent''—from participating in any executive sessions of the board and from serving on the Nominating, Governance, Compensation, Audit, or Regulatory Oversight Committees.[194]

The Commission also proposes that if the Chairman and CEO were the same individual, the board would be required to designate an independent director as a ''lead director'' to preside over executive sessions of the board, and the board would be required to publicly disclose the lead director's name and a means by which interested parties may communicate with the lead director.[195] This requirement should benefit exchanges and associations by providing that an independent director would head executive sessions, and thereby encourage an open climate of decision-making.

8. Separation of Regulatory and Market Operations

There is an inherent tension between an exchange's or association's role as a regulator and as the operator of a market, and between its role as a regulator and as a membership organization.[196] The existence of a shareholder class separate from membership adds yet another constituency with interests potentially in conflict with the regulatory responsibilities of the SRO. In recent years, some exchanges, as well as the NASD, have attempted to address this tension by separating, to varying degrees, their regulatory functions from their market operations.[197]

As discussed below, the Commission is proposing to require exchanges and associations, among other things, to effectively separate their regulatory function from their market operations and other commercial interests, to use regulatory funds only to fund regulatory obligations, and to establish procedures to prevent the dissemination of regulatory information other than to persons carrying out the exchange's or association's regulations obligations.[198] The Commission believes that these requirements should allow SROs to better manage the conflicts of interest inherent in any self-regulatory structure. In addition, the Commission believes that these provisions, along with other features of the proposed governance rules, would help promote greater accountability on the part of exchanges and associations with respect to their regulatory programs and strengthen their ability to meet their statutory obligations.

a. Independence of Regulatory Program. The proposed rules would require exchanges and associations to establish policies and procedures that provide for the independence of their regulatory programs from the operation or administration of their trading facilities and other businesses.[199] Specifically, the proposals would require that the exchange's or association's regulatory program be

[189] *See* proposed Rules 6a–5(d)(2) and 15Aa–3(d)(2). *See also supra* note 158 (noting the Business Roundtable Report's support of board and committee access to outside advisors).

[190] *See* proposed Rules 6a–5(d)(3) and 15Aa–3(d)(3).

[191] The Commission seeks to mitigate the conflict between an SRO's regulatory functions on the one hand, and its business operations on the other, among other conflicts. We note in this connection that, in light of the distinct statutory scheme and historical experience relevant to mutual funds and investment advisers, and in the context of different and potentially more serious conflicts, involving activities expressly prohibited by Congress, the Commission (Commissioners Glassman and Atkins dissenting) determined to require an independent chairman. *See* Investment Company Act Release No. 26520 (July 27, 2004), 69 FR 46377 (August 2, 2004); *see also supra* note 93. In the context of SROs, the Commission may require a different regulatory response. In any event, we are soliciting comment on whether this approach is appropriate in this context.

[192] *See* proposed Rules 6a–5(m)(1) and 15Aa–3(m)(1).

[193] *See* NYSE Constitution, Article IV, Section 2 and BSE Constitution, Article II, Section 1.

[194] *See* proposed Rules 6a–5(m)(2) and (4) and 15Aa–3(m)(2) and (4).

[195] *See* proposed Rules 6a–5(m)(3) and 15Aa–3(m)(3). With regard to SROs, the Commission believes at this time that, in combination with the other proposed safeguards, a lead independent director would adequately address its concerns. We are soliciting comment on these proposals.

[196] In testimony before Congress, the Commission's Chairman identified the inherent tension between an SRO's role as a regulator and as the operator of a market, and between its role as a regulator and as a membership organization, as a possible explanation for why self-regulation has not always worked as effectively and fairly as it should. *See* Testimony of William H. Donaldson, Chairman, Commission, Concerning Improving the Governance of the NYSE, before the Senate Committee on Banking, Housing and Urban Affairs (November 20, 2003).

[197] *See supra* note 80. Although the NYSE has not separated its regulatory functions and market operations into distinct legal entities, the NYSE's Regulatory Oversight and Regulatory Budget Committee is responsible for, among other things, assuring the effectiveness, vigor, and professionalism of the NYSE's regulatory program; overseeing the NYSE's Regulation, Enforcement & Listing Standards Committee and the Regulatory Quality Review Unit; determining the NYSE's regulatory plan, budget and staffing proposals annually; and assessing the NYSE's regulatory performance and recommending compensation and personnel actions involving senior regulatory personnel to the board's Human Resources & Compensation Committee for action. *See* NYSE Constitution, Article IV, Section 12(a)(4).

[198] *See* proposed Rules 6a–5(n) and 15Aa–3(n).

[199] *See* proposed Rules 6a–5(n)(1) and 15Aa–3(n)(1).

either: (1) Structurally separated from the exchange's or association's market operations and other commercial interests, by means of separate legal entities; or (2) functionally separated within the same legal entity from the exchange's or association's market operations and other commercial interests.[200] In the Commission's view, such separation must be designed to permit the regulatory program to function independently from the market operations and other commercial interests of the exchange or association. In either case, the proposed governance rules would require that the board appoint a Chief Regulatory Officer to administer the regulatory program and that the Chief Regulatory Officer report directly to the proposed independent Regulatory Oversight Committee.[201]

The Commission believes that its proposal to require the structural or functional separation of the regulatory functions and the market operations and other commercial interests of the exchange or association, together with the creation of a fully independent Regulatory Oversight Committee and the appointment of a Chief Regulatory Officer who would administer the regulatory program and report directly to the Regulatory Oversight Committee, are designed to manage more effectively the inherent conflicts of interest in our self-regulatory system and bolster the effectiveness of exchanges' and associations' regulatory programs. By not mandating a particular structure for this separation—focusing on the ends rather than the means—the proposed rules would provide exchanges and associations with a measure of flexibility in determining how best to achieve the result of functional independence of the regulatory program.

In addition, the proposed requirement that each exchange and association appoint a Chief Regulatory Officer is designed to assure that all regulatory matters are subject to oversight by a person independent of the SRO's commercial interests. Further, the proposal to require the Chief Regulatory Officer to report directly to a committee composed solely of independent directors is intended to fortify the independence of the Chief Regulatory Officer. In the Commission's view, these requirements to enhance the independence of the regulatory function further the objectives of Sections 6(b)(1) and 15A(b)(2) of the Exchange Act,[202] which require exchanges and associations, respectively, to be so organized and have the capacity to carry out the purposes of the Exchange Act, and comply, and enforce compliance by their members, and persons associated with their members, with the Exchange Act and rules thereunder and the rules of the exchange or association.

b. Use of Regulatory Fees, Fines, and Penalties. The proposed governance rules also would require an exchange or association to direct monies collected from regulatory fees, fines or penalties (''regulatory funds'') exclusively to fund the regulatory operations and other programs of the exchange or association related to its regulatory responsibilities, and to keep such books and records as are necessary to evidence compliance with this requirement.[203] Consistent with the proposed rules, an exchange or association could not use such regulatory funds to pay dividends or make distributions to its shareholders. The scope of the categories of regulatory funds included in this requirement, as well as the limitation on use of such funds, is intended to be broad. As discussed in Section IV.C. below, regulatory fees would include all member fees, dues and assessments charged and collected by an exchange or association that are assessed for the purpose of funding the operation of the exchange's or association's regulatory program.[204] Regulatory fines or penalties also would include any revenue received from fines or penalties resulting from disciplinary or enforcement actions.

This proposed restriction on the use of regulatory funds is intended to preclude an SRO from using its authority to raise regulatory funds for the purpose of benefiting its shareholders, or for other non-regulatory purposes, such as to fund executive compensation. SROs have an obligation to be so organized and have the capacity to be able to carry out the purposes of the Exchange Act, and to enforce compliance by their members with the Exchange Act and their rules.[205] SRO rules must provide for the equitable allocation of reasonable dues, fees, and other charges among its members and issuers and other persons using its facilities.[206] SRO rules also must provide that their members and persons associated with their members are appropriately disciplined for violations of the Exchange Act or SRO rules.[207] SROs collect various fees, dues and assessments from their members on the basis that they need to fund a program to carry out these statutory obligations. The Commission believes that these proposed requirements to use regulatory funds only to fund regulatory activities would further advance the SROs' ability to effectively comply with these statutory requirements, by helping to ensure that an SRO's regulatory activities are properly funded and that the SRO is not abusing its regulatory authority.

c. Confidentiality of Regulatory and Trading Information. Proposed Rules 6a–5(n)(5)(i)(A) and 15Aa–3(n)(5)(i)(A) would require exchanges and associations to establish policies and procedures reasonably designed to prevent the dissemination of regulatory information[208] to any person other than those officers, directors, employees, and agents of the exchange or association directly involved in carrying out the exchange's or association's regulatory obligations under the Exchange Act. This means that an exchange's or association's policies and procedures would be required to establish that regulatory information could only be available to officers and employees that are responsible for regulatory functions, directors that are involved in regulatory functions, such as an appeal of a disciplinary matter, or agents to the extent necessary to perform the regulatory function for which they have been hired. In addition, the proposed rules would require that an exchange's or association's policies and procedures be reasonably designed to prevent the use of regulatory information for any purpose other than for carrying out the exchange's or association's regulatory obligations.[209] The Commission also is proposing that an exchange's or association's policies and procedures would have to require that its officers,

[200] *See* proposed Rules 6a–5(n)(2) and 15Aa–3(n)(2).

[201] *See* proposed Rules 6a–5(n)(3) and 15Aa–3(n)(3). To the extent that the Chief Regulatory Officer of the exchange or association performs the same responsibilities for any regulatory subsidiary, the regulatory subsidiary would not need to appoint a Chief Regulatory Officer. *See* proposed Rules 6a–5(a) and 15Aa–3(a).

[202] 15 U.S.C. 78f(b)(1) and 78*o*–3(b)(2).

[203] *See* proposed Rules 6a–5(n)(4) and 15Aa–3(n)(4).

[204] *See also* proposed Exhibit I to revised Form 1 and new Form 2.

[205] *See* 15 U.S.C. 78f(b)(1) and 78*o*–3(b)(2).

[206] *See* 15 U.S.C. 78f(b)(4) and 78*o*–3(b)(5).

[207] *See* 15 U.S.C. 78f(b)(6) and 78*o*–3(b)(7).

[208] The term ''regulatory information'' is proposed to be defined to mean any information collected by an exchange or association in the course of performing its regulatory obligations under the Exchange Act. *See* proposed Rules 6a–5(b)(17) and 15Aa–3(b)(18). Examples of such regulatory information would include, for instance, information relating to an on-going disciplinary investigation or action against a member, the amount of a fine imposed on a member, financial information, or information regarding proprietary trading systems gained in the course of examining a member.

[209] *See* proposed Rules 6a–5(n)(5)(i)(B) and 15Aa–3(n)(5)(i)(B).

directors, employees and agents agree to comply with these requirements.[210]

In addition, proposed Rules 6a–5(n)(5)(i)(c) and 15Aa–3(n)(5)(i)(c) would require exchanges and associations to have policies and procedures reasonably designed to maintain the confidentiality of information that must be submitted to the exchange or association to effect a transaction on or through the exchange, association or a facility.[211] The proposed rules would, however, allow an exchange or association to make available such information in an aggregated form, if the information is aggregated to such an extent that the recipient is unable to identify (such as by reverse engineering) any person whose data is included in the aggregate information, or if the person consents.[212] Exchanges' and associations' policies and procedures also would have to require exchange and association officers, directors, employees and agents to agree to maintain the confidentiality of this information consistent with the proposed rules.[213]

The Commission believes that the requirement that exchanges and associations keep regulatory and certain other information confidential, and not use information collected in the course of performing regulatory obligations for business or other non-regulatory purposes would help to assure an independent and effective regulatory function and is implicit in the exchange's or association's responsibilities under the Exchange Act.[214] As competitive pressures on SROs increase, however, and the tensions between their regulatory obligations and commercial interests increase, the Commission believes that an explicit prohibition on this conduct may be necessary and appropriate.

9. Member Voting and Ownership Limitations

As discussed above in Section II.A., to further the ability of an exchange or association to effectively carry out its statutory obligations under Sections 6(b) and 15A(b) of the Exchange Act,[215] the Commission is proposing to require an exchange or association to limit the ability of its members that are brokers or dealers to own or vote a significant interest in the exchange, association or any separate facility.[216]

Several exchanges that have converted to shareholder-owned structures have limited the ability of any person, including their members, to directly or indirectly own or vote more than a certain percentage of the interest in the exchange.[217] Similar limits have been approved for separate SRO facilities.[218] The Commission approved these limits on a case-by-case basis under the rule filing process of Section 19(b) of the Exchange Act and Rule 19b–4 thereunder.[219]

For example, in the case of the public offering of Archipelago Holdings (the parent company of Arca-Ex, the equities trading facility of PCX Equities), the Commission approved a PCX rule prohibiting any person and its related persons from directly or indirectly owning more than 40% and voting more than 20% of the securities of Archipelago Holdings.[220] If a person wanted to exceed these limits, the rules require PCX to file a proposed rule change with the Commission and the Commission would need to approve such action. Similarly, in connection with the demutualizations of Phlx and PCX, the Commission approved a comparable prohibition under the exchanges' rules on any person and its related persons directly or indirectly owning more than 40% or voting more than 20% of the applicable securities without first receiving Commission approval of a proposed rule change.[221] In each of these three instances, the limitations applied not only to members,[222] but to any person owning securities of the applicable SRO or a facility.[223]

By proposing to require SROs only to limit the ownership and voting of their members, the Commission today is proposing a less restrictive approach than the rules adopted by the exchanges discussed above. The proposal is designed only to address the specific conflict of interest that could exist if a member were to own a significant interest in the exchange or association of which it was a member or a facility through which the member is permitted to effect transactions, by requiring an exchange or association to impose ownership and voting limits on members that are brokers or dealers.[224] The Commission believes that the conflict with respect to members creates a risk that a member could use its controlling interest in its regulator to influence the regulatory process to its benefit. Accordingly, because of the risk presented by the prospect of member control of its regulator, and the significant incentives for a member to attempt to exercise undue influence in such a case, the Commission is proposing to require an SRO to impose ownership and voting restrictions on members that are brokers or dealers.

The Commission recognizes that there is also the potential for any person that controls an exchange or association or facility of an exchange or association to direct its operation so as to cause the SRO to neglect its regulatory obligations under the Exchange Act. In light of the substantive governance and other standards being proposed today to strengthen the independence of SROs and their regulatory functions, the Commission is not at this time proposing to require an exchange or association to impose ownership and voting restrictions on persons other than members. For the time being, however, the Commission intends to maintain its current policies in this area while it considers whether to adopt ownership and voting restrictions that apply only to members.

[210] *See* proposed Rules 6a–5(n)(5)(ii) and 15Aa–3(n)(5)(ii).

[211] For example, this information could include the name of the member, or the member's customer, submitting the order for execution, and the terms of the order.

[212] *See* proposed Rules 6a–5(n)(5)(i)(C) and 15Aa–3(n)(5)(i)(C).

[213] *See* proposed Rules 6a–5(n)(5)(ii) and 15Aa–3(n)(5)(ii). The Commission notes that, of course, nothing in the proposed rules would limit in any way the Commission's authority to access SRO information or the ability of any SRO and its officers, directors, employees, and agents to provide any information to the Commission.

[214] *See* Sections 6(b)(8) and 15A(b)(9) of the Exchange Act, 15 U.S.C. 78f(b)(8) and 78*o*–3(b)(9).

[215] 15 U.S.C. 78f(b) and 78*o*–3(b).

[216] *See* proposed Rules 6a–5(o) and 15Aa–3(o).

[217] *See, e.g.,* Securities Exchange Act Release Nos. 49718 and 49098, *supra* note 61.

[218] *See* Securities Exchange Act Release Nos. 50170, *supra* note 65 and 49067, *supra* note 59.

[219] 15 U.S.C. 78s(b) and 17 CFR 240.19b–4.

[220] *See* Securities Exchange Act Release No. 50170, *supra* note 65.

[221] *See* Securities Exchange Act Release Nos. 49718 and 49098, *supra* note 61.

[222] In each of these instances, members' ownership interest was limited to 20%, with no process for members to exceed that limitation.

[223] When the Commission approved the demutualization of PCX and the operation of BOX as a facility of the BSE, there were shareholders that owned more than 20%. In each case, the rules of the exchange required the controlling shareholder to consent to the Commission's jurisdiction; to provide that the books and records of the shareholder shall be deemed to be the books and records of the SRO (to the extent they are related to the exchange's or facility's activities); to agree and consent (on behalf of its officers and directors) that its officers and directors would be deemed to be officers and directors of the SRO (to the extent they are related to the exchange's or facility's activities); and to agree (on its own behalf and that of its officers and directors) to cooperate with the Commission and the SRO in the performance of their regulatory oversight responsibilities. *See* Securities Exchange Act Release Nos. 49718, *supra* note 61 and 49067, *supra* note 59. The Commission is not at this time proposing such requirements for controlling shareholders of an SRO or a facility.

[224] The definition of ''related person'' also would include all members that are natural persons, either because they are registered brokers or dealers, or because they are ''related persons'' of the broker or dealer with which they are associated. *See infra* Section II.B.9.a.

The proposed rules would apply to all exchanges and associations, not just demutualized ones. Although the proliferation of demutualized exchanges and shareholder-owned facilities has highlighted the concern with member control of an SRO, the Commission believes these concerns are equally applicable to SROs that continue to be mutual organizations.[225]

Specifically, proposed Rules 6a–5(o)(1) and 15Aa–3(o)(1) would require the rules of a national securities exchange and a registered securities association to prohibit any member that is a broker or dealer, alone or together with its related persons, from either:

• Directly or indirectly beneficially owning[226] any interest in the exchange or association, or a facility of the exchange or association through which the member is permitted to effect transactions, that exceeds 20% of any class of securities or other ownership interest of the exchange, association or facility; or

• Voting any interest in such exchange, association or facility of the exchange or association through which the member is permitted to effect transactions, that exceeds 20% of the voting power of any class of securities or other ownership interest of such exchange, association or facility.[227]

Thus, a member that is a broker or dealer would not be able to, alone or together with its related persons, own more than 20% of the exchange or association of which it is a member or a facility through which the member is permitted to effect transactions. A member that is a broker or dealer, and its related persons, also would not be able to vote or cause the voting of more than 20%. The rules of the SRO would be required to prohibit both; they would not be able to prohibit only one or the other.

The Commission preliminarily believes that a member ownership and voting limit of 20% is an appropriate threshold because it precludes situations where a member would have a realistic probability of being able to exert undue influence over its SRO, yet refrains from interfering in an SRO's organizational processes or the desire by members to acquire equity interests in their markets. In some Commission rules, a 10% ownership threshold is used to determine ''control.''[228] Accordingly, the Commission considered whether 10% would be a more appropriate threshold to propose for member ownership and voting limitations, given the concerns regarding the conflict of interest if a member were to control its regulator. The Commission recognizes, however, that generally the existing standard that exchanges have in place with respect to limits on their member's ownership in and voting of interests in the exchange or a facility is 20%, and that members that currently own more than 10% would have to divest themselves of any excess interest. The Commission therefore is proposing 20% as the ownership and voting threshold. The Commission requests specific comment on whether the threshold should be lower than 20%, given the concern that a member with a lesser interest may be able to influence or control the exchange or association.[229]

a. Members' Interests Aggregated With Their Related Persons. For purposes of calculating a member's ownership and voting interests, the proposed rules would aggregate a member's ownership and voting interests with those of its ''related persons.'' An exchange or association has members over which the exchange or association has regulatory authority, and these members participate in the governance and disciplinary process of the exchange or association. The Commission therefore believes that it is important to aggregate the members' ownership and voting interests with the interest of any person with whom the member may be able to act together to influence or control the exchange, association or facility. As such, the proposed rules would define ''related person'' to mean, with respect to a member that is a broker or dealer: (i) Any affiliate of the member;[230] (ii) any person(s) associated with the member;[231] (iii) any immediate family member of the member, or any immediate family member of the member's spouse, who, in each case, has the same home as the member or who is a director or officer of the exchange, association or facility or any of its parents or subsidiaries; and (iv) any immediate family member of a person associated with the member or any

[225] The Commission notes that PCX had a limitation on the number of seats that any person, associated person, or group of associated persons could own. *See* Securities Exchange Act Release No. 46098 (June 20, 2002), 67 FR 43693 (June 28, 2002) (order approving PCX rule filing to limit to 15% the number of exchange memberships that any person, associated person, or group of associated persons could, directly or indirectly, beneficially own or control the voting rights of). In connection with the demutualization of PCX, PCX replaced the limitation on the number of seats that any person, associated person, or group of associated persons could own with limitations on the amount of ownership interests and voting power that a person and its related persons could possess. *See* Securities Exchange Act Release No. 49718, *supra* note 61.

The Commission also notes that the CHX has a rule that states that the exchange will not approve a transfer or sale of a membership if the transferee (or lessor), together with any person who directly or indirectly controls, is controlled by, or under common control with, the transferee (or lessor), owns or has the voting power of 10% or more of the outstanding memberships of the exchange, unless the requirement is waived by the exchange's board for good cause shown. *See* CHX Article I, Rule 10.

[226] ''Beneficial ownership'' would be defined to have the meaning set forth in Rule 13d–3, 17 CFR 240.13d–3. *See* proposed Rules 6a–5(b)(4) and 15Aa–3(b)(5). The concept of beneficial ownership in Rule 13d–3 is designed to encompass any person or group of persons that may be able to act to influence or control an issuer. The Commission is proposing to use the same definition of beneficial ownership in this rule because it also would describe those persons or groups of persons that may be able to act to influence or control an exchange or association. However, to the extent any person beneficially owns any security or other ownership interest solely because such person is a member of a group within the meaning of Section 13(d)(3) of the Exchange Act, such person would not be deemed to beneficially own such security or other ownership interest for purposes of this section, unless such person had the power to direct the vote of such security or other ownership interest. *See* proposed Rules 6a–5(b)(4) and 15Aa–3(b)(5). The Commission is proposing to exclude beneficial ownership that results solely from being a member of a group to provide more certainty to members that would be required to comply with the limitations, in light of the impact of exceeding the ownership limit—*i.e.*, that the member will be divested of the excess interest. If a person has the right to vote the interest, however, it is important to continue to include such interest.

[227] Specifically, this requirement would prohibit a member that is a broker or dealer from directly or indirectly voting, causing the voting of, or giving any consent or proxy with respect to the voting of, any interest in the exchange, association, or facility that exceeds 20% of the voting power of any class of securities or other ownership interest of such exchange, association, or facility. See proposed Rules 6a–5(o)(1)(ii) and 15Aa–3(o)(1)(ii).

[228] *See, e.g.*, Rule 19h–1(f)(2) under the Exchange Act, 17 CFR 240.19h–1(f)(2) (defining a presumption of ''control'' to include a person that directly or indirectly has the right to vote 10% or more of the voting securities of a company) and Rule 10A–3(e) under the Exchange Act, 17 CFR 240.10A–3(e) (deeming a person not to be in control of a specified person if the person is not the beneficial owner, directly or indirectly, of more than 10% of any class of voting security of the specified person).

[229] *See infra* Section II.C.

[230] ''Affiliate'' would be defined to mean any person that, directly or indirectly, controls, is controlled by, or is under common control with, the exchange or association. *See* proposed Rules 6a–5(b)(1) and 15Aa–3(b)(1). ''Control'' would be defined to mean the possession, direct or indirect, of the power to direct or cause the direction of the management and policies of a person, whether through the ownership of voting securities, by contract, or otherwise. Any person that (i) is a director, general partner, or officer exercising executive responsibility (or having similar status or function); (ii) directly or indirectly has the right to vote 25% or more of a class of voting securities or has the power to sell or direct the sale of 25% or more of a class of voting securities; or (iii) in the case of partnership, has the right to receive, upon dissolution, or has contributed, 25% or more of the capital, is presumed to control that person. *See* proposed Rules 6a–5(b)(7) and 15A–3(b)(8).

[231] ''Person associated with a member'' would be defined to have the same meaning as in Section 3(a)(21) of the Exchange Act, 15 U.S.C. 78c(a)(21). *See* proposed Rules 6a–5(b)(16) and 15Aa–3(b)(17).

immediate family member of such person's spouse, who, in each case, has the same home as the person associated with the member or who is a director or officer of the exchange, association or facility or any of its parents or subsidiaries.[232]

For example, the parent company of a member would be considered a ''related person'' of the member. A sister affiliated company of the member also would be a ''related person'' of the member. The definition of ''related person'' also would include all members that are natural persons, either because they are registered brokers or dealers, or because they are ''related persons'' of the broker or dealer with which they are associated.

It is important to note that the proposed rules would require an exchange or association to restrict the indirect ownership and voting interests of a member that is a broker or dealer in an exchange, association or facility. The Commission believes that it is crucial to restrict the indirect ownership and voting interests of these members because if the Commission were to require an exchange or association to establish requirements only for direct—but not indirect—ownership and voting rights, the limitations could be easily circumvented. For example, if an exchange only prohibited a member from directly owning or voting shares, the member could hold its ownership interests in the exchange, association or facility through multiple subsidiaries of a holding company, thus easily circumventing the intent of the proposed rules. In addition, the ownership and voting limitations would apply to ownership and voting of interests in a parent company of the exchange or association. For example, if the exchange, association or facility was wholly-owned by a holding company, a member (alone or together with its related persons) would be prohibited from owning or voting more than 20% of the interest in the parent company because that would be an indirect ownership or voting interest in the exchange, association or facility. The proposed limitations also would apply to a member (either alone or together with its related persons) that beneficially owned more than 20% of an entity that itself owned more than 20% of an exchange, association or facility, if the person (and the entity) had the ability to vote or cause the vote, or dispose of, or cause the disposition of, the interest in the exchange, association, or facility.

b. Solicitation of Revocable Proxies. The Commission is proposing to make clear in the proposed rules that the 20% voting limitation—which includes ''causing the vote'' of more than 20% of the interests in an exchange, association or facility—would not apply to any solicitation or receipt of revocable proxies by a member, if conducted pursuant to Regulation 14A under the Exchange Act.[233] Thus, an exchange or association would be required to preserve the ability of a member to solicit and receive revocable proxies from other shareholders on such issues as alternative nominees for the board of directors, or a particular shareholder proposal. The solicitation or receipt of a revocable proxy does not transfer voting (or investment) power—*i.e.* beneficial ownership—to the person soliciting or receiving the proxy.[234] Therefore, the act of soliciting or receiving a revocable proxy should not undermine the purpose of the voting limitation because it would not constitute an agreement or other arrangement between the shareholder soliciting the proxy and a shareholder being solicited to vote a particular way. In particular, any shareholder so solicited would remain free to choose whether or not to grant a proxy, and the proxy would remain revocable up until the vote that is the subject of the proxy. The Commission notes, however, that if a member and one or more persons banded together to solicit proxies, and in addition that group agreed to vote a particular way, the agreement to vote would go beyond the soliciting or receipt of proxies and be considered to be causing the vote, or giving a consent or proxy with respect to voting, that would be in violation of the proposed voting limitation, if the aggregate amount of ownership or voting interests controlled by the group of persons so agreeing exceeded 20%.

The Commission is concerned, however, that allowing a member to solicit an ''open-ended'' proxy—one with no end date and one not for a particular purpose or meeting—from one or more shareholders would allow a member to obtain the ability to vote more than 20%. As such, the proposed rules would require an exchange or association to prohibit a member subject to the voting limitation from soliciting a proxy pursuant to an exemption contained in Rule 14a–2(b)(2) under the Exchange Act[235] with regard to a person or persons whose interest, together with the member and its related person's interests, would exceed the 20% voting limit.[236] The purpose of not allowing solicitations by members pursuant to this exemption in excess of the voting limitation is to prevent a member from soliciting proxies that are not subject to the requirements of Rule 14a–4 under the Exchange Act,[237] which requires, among other things, a form of proxy to clearly identify each matter to be acted upon, limits the authority that a proxy may confer, and limits the length of time for which a proxy is valid.[238] Thus, disallowing this exemption for members would close a potential loophole to the proposed voting limitation.

c. Requirement To Divest Ownership Interest and Restrict Voting. Proposed Rules 6a–5(o)(3) and 15Aa–3(o)(3) also would require an exchange or association to provide in its rules an effective mechanism to divest any member and its related persons of any interest owned in excess of the 20% limitation discussed above. The Commission believes that to be an effective mechanism, the rule would have to require the exchange or association to take action to reduce the member's and its related persons' ownership interest that exceeded the proposed ownership limit. In addition, proposed Rules 6a–5(o)(4) and 15Aa–3(o)(4) would require the rules of an exchange or association to be reasonably designed to not give effect to the portion of a vote by a member and its related persons that is in excess of the proposed voting limitation.

The Commission is not proposing to specify how an exchange or association would effectuate these requirements. Instead, the Commission is proposing to provide exchanges and associations flexibility to determine the best approach under relevant state law. Any mechanism adopted by an exchange or association, however, would need to be sufficient to assure that the exchange or association has a viable, enforceable mechanism to divest a member and its related persons of any interest owned in excess of, and to not give effect to the

[232] *See* proposed Rules 6a–5(b)(19) and 15Aa–3(b)(20).

[233] *See* 17 CFR 240.14a–1 through 240.14a–15. *See also* proposed Rules 6a–5(o)(2) and 15Aa–3(o)(2).

[234] *See* Securities Exchange Act Release No. 39538 (January 12, 1998), 63 FR 2854, at 2858 (Section II.G.) (January 16, 1998).

[235] Rule 14a–2(b)(2) under the Exchange Act, 17 CFR 240.14a–2(b)(2), exempts from Rules 14a–3 to 14a–6 (other than Rule 14a–6(g)), 14a–8, and 14a–10 to 14a–15 any solicitation made otherwise than on behalf of the registrant where the total number of persons solicited is 10 or fewer. *See* 17 CFR 240.14a–3 through 240.14a–6; 240.14a–8; and 240.14a–10 through 240.14a–15.

[236] *See* proposed Rules 6a–5(o)(2) and 15Aa–3(o)(2).

[237] 17 CFR 240.14a–4.

[238] *See* Rules 14a–4(a)(3), 14a–4(c)–(d), and 14a–4(d)(2)–(3) under the Exchange Act, 17 CFR 240.14a–4(a)(3), 14a–4(c)–(d), and 14a–4(d)(2)–(3).

portion of a vote in excess of, the 20% limitation. This mechanism would need to impose a requirement, not a choice, on the exchange or association to take such action to reduce the member's interest or voting power.[239] For example, an exchange could adopt rules—perhaps as part of its organizational documents—to provide that, if a member that is a broker or dealer exceeded the 20% ownership limitation, the exchange would be required to redeem that number of shares owned in excess of the 20% ownership limitation at par value.[240] Because the par value of the shares of stock is likely to be substantially less than the fair market value of the shares of stock, such a provision may act as a strong disincentive to members to exceed the limit, and cause them to more closely monitor their accumulation of ownership or voting power in an exchange, association or facility.[241] This requirement would not preclude an exchange or association from having a separate mechanism to divest a broker-dealer member whose ownership goes above 20% solely because of an issuer repurchase of its own shares. For example, an SRO could adopt rules that permit a grace period to divest shares under such circumstances. An exchange or association also could amend its rules to provide that, if a broker-dealer member were to vote, or attempt to vote, more than 20%, the exchange or association would not honor any portion of the vote in excess of 20%.[242]

d. Ability To Obtain Information. Finally, proposed Rules 6a–5(o)(5) and 15Aa–3(o)(5) would require an exchange's or association's rules to provide a mechanism for the exchange or association to obtain information relating to ownership and voting interests in the exchange, association or separate facility from any owner of any interest. The Commission believes this requirement would help an exchange or association to more closely monitor ownership and voting by its members in relation to the proposed 20% limits. For example, an exchange could amend its governing documents to require owners to provide information relating to their ownership and voting interests to the exchange upon request. Alternatively, the exchange could require owners to provide such information at specified times, such as monthly or quarterly. In addition, this requirement would provide a mechanism for an exchange or association to obtain the ownership information that the exchange or association would be required to disclose to the Commission pursuant to proposed Exhibit Q to revised Form 1 and new Form 2.[243]

10. Code of Conduct and Ethics and Governance Guidelines

The proposed governance rules would require that the rules of each exchange and association provide for a code of conduct and ethics for directors, officers and employees, and provide that any waiver of the code of conduct and ethics must be approved by the board, or the appropriate board committee.[244] The proposed rules also would require that the exchange or association prohibit any of its employees or officers from being a member of the board of directors of a listed issuer or member firm.[245]

Although the exchange or association could determine the details of its own policies, the Commission proposes that the code of conduct and ethics, at a minimum, establish policies and procedures regarding: conflicts of interest; corporate opportunities; confidentiality; fair dealing; protection and proper use of the exchange's or association's assets; compliance with laws, rules, and regulations by directors, officers and employees; and the reporting of illegal or unethical behavior. Formulation and adoption of a code of conduct and ethics would present an exchange or association with an opportunity to express its values, as well as the standards of behavior that the exchange or association wishes to set for itself.[246] The Commission believes that requiring exchanges and associations to adopt a code of conduct and ethics should help foster the ethical behavior of directors, officers and employees, because these individuals would be informed of the standards of conduct expected of them in fulfilling the responsibilities of their positions. The Commission further believes that the specific provision prohibiting employees or officers of an exchange or association from being a board member of a listed issuer or member firm is desirable to avoid the inherent conflict of interest of such a relationship.

The proposed governance rules also would require that each exchange and association adopt governance guidelines that, at a minimum, establish policies regarding: director qualification standards; director responsibilities; director access to management and independent advisors; director compensation; director orientation and continuing education; management succession; and annual performance evaluations of the board.[247] Requiring exchanges and associations to adopt governance guidelines should help promote greater awareness of the principles that are intended to guide the exchange or association in implementing good governance.

In our view, these proposals would assist exchanges and associations in fulfilling the statutory mandate that they be so organized and have the capacity to carry out the Exchange Act's purposes.[248]

11. Exemption Provision

The proposed governance rules would establish procedures for the Commission, upon written request or its own motion, to grant an exemption from the rules' provisions, either unconditionally or on specified terms and conditions, if the Commission determines that such exemption is necessary or appropriate in the public interest and is consistent with the protection of investors.[249] Pursuant to this provision, the Commission would consider and act upon appropriate requests for relief from the proposed rules' provisions and would consider the particular facts and circumstances relevant to each such request, the potential ramifications of granting any exemption, and any appropriate

[239] The Commission notes that any mechanism would need to be valid, binding, and enforceable under state law.

[240] *See, e.g.,* Securities Exchange Act Release No. 50170, *supra* note 65. The Commission notes that any redemption mechanism that reduces the number of outstanding shares of stock or other ownership interest, to be effective, would have to take into account such reduction in determining what amount would need to be redeemed to bring the member and its related persons below the 20% threshold, and to cover a situation where a reduction in the number of outstanding shares causes another owner to exceed the 20% threshold.

[241] The SRO's procedures also could provide that even a member that exceeds the ownership limitation through its own (or its related person's) actions would have the ability to sell out its excess shares prior to the SRO repurchasing them. The Commission emphasizes, however, that this ''grace period'' should be of short duration.

[242] *See, e.g.,* Securities Exchange Act Release No. 49718, *supra* note 61. The Commission notes that any such rule changes would be required to be filed pursuant to Section 19(b) of the Exchange Act and would be subject to the Commission's review and approval.

[243] *See infra* Section IV.C.9.

[244] *See* proposed Rules 6a–5(p)(1) and 15Aa–3(p)(1). This proposal is consonant with the Business Roundtable Report which recommended that, as part of good governance, ''corporations should have a code of conduct with effective reporting and enforcement mechanisms.'' *See* Business Roundtable Report, *supra* note 91, at 10.

[245] *See* proposed Rules 6a–5(p)(2) and 15Aa–3(p)(2).

[246] *See* Breeden Report, *supra* note 134.

[247] *See* proposed Rules 6a–5(q) and 15Aa–3(q).

[248] *See* Sections 6(b)(1) and 15A(b)(2) of the Exchange Act, 15 U.S.C. 78s(b)(1) and 78*o*–3(b)(2).

[249] *See* proposed Rules 6a–5(s) and 15Aa–3(s).

conditions to be imposed as part of the exemption.

12. Implementation

Because exchanges and associations in all likelihood would have to revise their governing documents to comply with the applicable rule, each exchange and association would be required to submit to the Commission proposed rule changes reflecting new rules or rule amendments no later than four months following the date of publication of final rules in the **Federal Register** (''final rules' publication date''), and those rules or rule amendments would have to be approved by the Commission no later than ten months following the final rules' publication date and operative no later than one year following the final rules' publication date.[250] By amending its existing rules, each exchange or association could tailor its governance rules to its own particular structure, as long as such rules were consistent with the Exchange Act and the proposed governance rules, if those rules ultimately are adopted by the Commission.

C. Request for Comment

The Commission seeks comments on proposed Rules 6a–5 and 15Aa–3. Also, the Commission requests that interested persons respond to the following specific questions:

Question 1. Do the proposed governance rules strike an appropriate balance? Are there provisions of the proposed rules that are unnecessary or are there other provisions that should be added? Are there aspects of the proposed rules that would be difficult for exchanges or associations to implement and, if so, why would that be the case?

Question 2. Is it appropriate to extend the proposed rules to regulatory subsidiaries?

Question 3. Is the proposal that the board of each exchange and association be composed of a majority of independent directors appropriate? Should the proposal require a different threshold, *e.g.*, a wholly independent board or independent directors constituting 75% or 66% of the board?

Question 4. Is the proposed definition of ''independent director,'' *i.e.*, that the director have no material relationship with the exchange or association or any affiliate of the exchange or association, or any member of the exchange or association or any affiliate of such member, appropriate? Is there another definition of independent director that would be preferable? Is the proposed definition of ''material relationship'' appropriate? Is an annual determination of independence appropriate, or should such determination be made more or less frequently? Have we provided enough guidance for boards to make the required independence determination? If not, what additional guidance is needed?

Question 5. Are the relationship tests set forth in the proposed rules that indicate when a director would not be considered independent appropriate? Are there aspects of these relationship tests that should be modified or clarified and, if so, why would that be the case? Is the three-year look-back period appropriate? Should the look-back period be longer or shorter? Is the scope of the proposed relationship tests appropriate? Are there other relationships that should be expressly covered so that the director could not be considered independent, *e.g.*, the Chairman of the board of a member firm or listed issuer? Is the $60,000 limit on payments received by the director, or an immediate family member, from the exchange or association appropriate? Should this amount be higher or lower? Is the proposed definition of ''immediate family member'' appropriate? Is the proposed definition of ''compensation'' appropriate? Is the 2% of recipient's yearly gross revenues or $200,000 limit on payments made to or from an exchange or association to an organization in which the director, or an immediate family member, is a partner, controlling shareholder or executive officer appropriate? Is the exclusion from the 2% gross revenues/$200,000 payments test for non-discretionary charitable contribution matching programs appropriate? Should these percentage and dollar amounts be higher or lower? Is the proposed definition of ''control'' appropriate? Is it appropriate to include in the relationship tests immediate family members and affiliates? Is the limitation on prior or current relationships with the exchange's or association's auditor appropriate?

Question 6. Many exchanges define a ''public director'' to include a person who has no material relationship with a broker or dealer. The proposed rules' definition of independent director would not expressly preclude an independent director from being associated with a non-member broker or dealer or affiliate of a non-member broker or dealer, unless such non-member broker or dealer or affiliate has a material relationship with the exchange or association. Should the proposed definition of independent director preclude a director associated with a broker or dealer or any affiliate of such broker or dealer from being considered an independent director?

Question 7. Should an executive officer of an issuer whose securities are ''primarily traded'' on an exchange or a facility of an association be precluded from being an independent director? Should this limitation cover an executive officer of any issuer of securities that are traded on the exchange or a facility of an association pursuant to unlisted trading privileges without regard to the extent of the volume of trading in those securities?

Question 8. Is the proposed requirement to remedy non-compliance with the majority independence requirement by the earlier of the next annual meeting or one year from the date of non-compliance appropriate? Is another time frame more appropriate?

Question 9. Is the proposed definition of ''Standing Committee'' appropriate? Should we require fewer or additional Standing Committees? If so, what should be eliminated or added? Is the proposed requirement that each Standing Committee be composed entirely of independent directors appropriate? Are there circumstances when this requirement would not be necessary? Are the duties of each of the Standing Committees, as proposed to be set forth in their charters, appropriate or are there duties that should be added or deleted? If so, what should be added or deleted? Are the requirements that the Standing Committees be composed solely of independent directors and report directly to the board likely to foster a greater degree of independent decision-making by the exchange's or association's governing body? If not, what would accomplish this goal? Should each Standing Committee be required to conduct an annual performance evaluation?

[250] *See* proposed Rules 6a–5(r) and 15Aa–3(r). As SROs, exchanges and associations currently are required by the Exchange Act to file with the Commission any proposed new rules or rule amendments, accompanied by a concise general statement of the basis for, and purpose of, the proposed rule change. Once an exchange or association files a proposed rule change, the Commission must publish notice of it and provide an opportunity for public comment. *See* Section 19(b)(1) of the Exchange Act, 15 U.S.C. 78s(b)(1), and Rule 19b–4 under the Exchange Act, 17 CFR 240.19b–4. The proposed rule change may not take effect unless the Commission approves it pursuant to Section 19(b)(2) of the Exchange Act, or it is otherwise permitted to become effective under Section 19(b)(3)(A) or Section 19(b)(7) of the Exchange Act. 15 U.S.C. 78s(b)(2), (b)(3)(A) and (b)(7).

The requirements that the exchanges and associations file a proposed rule change that complies with the applicable proposed rule by a specified date, and that final rules be operative by a specified date, are consistent with the Commission's approach when it adopted Rule 10A–3 under the Exchange Act. *See* Rule 10A–3 under the Exchange Act, 17 CFR 240.10A–3.

Question 10. Some SROs currently require that members of their audit committee be financially literate and/or that at least one member have accounting related financial management expertise. *See, e.g.*, PCX Rule 3.3(d) and the NYSE Audit Committee Charter. Also, Section 407 of the Sarbanes-Oxley Act and Item 401 under Regulation S-K require that listed companies disclose whether or not the Audit Committee contains at least one financial expert. Should the proposed governance rules contain a similar requirement for exchanges' and associations' Audit Committees? Are the proposed responsibilities of the Audit Committee appropriate? Should the proposed rules require the Audit Committee to prepare and publicly disclose an annual report? Are there other responsibilities that should be added? If so, which? Should any of the proposed Audit Committee responsibilities be eliminated? If so, which?

Question 11. Are the provisions relating to the fair representation requirement appropriate? Is the requirement that at least 20% of the directors be selected by members and that members be given the opportunity to select candidates who compose at least 20% of the total number of directors appropriate? Should the 20% threshold be higher or lower?

Question 12. Given the proposed fair representation requirement that at least 20% of directors be selected by members, could this factor impair the independence of those directors selected by members?

Question 13. Is the provision pertaining to the petition process appropriate? Is the requirement limiting to 10% the percentage of members necessary to put forth an alternative member candidate or candidates appropriate? Should the 10% threshold be higher or lower? Should the percentage limitation differ depending on whether members petition to nominate a single candidate or more than one candidate? Are there other ways to obtain the fair representation of members through a petition process rather than by imposing a limitation on the percentage of members necessary to put forth an alternative candidate?

Question 14. Are the other provisions relating to the proposed fair representation requirement appropriate? Specifically, is the proposed requirement that at least 20% of the members of any committee, subcommittee, or panel that is subject to the jurisdiction of the Regulatory Oversight Committee and that is responsible for disciplinary matters be composed of members of the exchange or association, appropriate? Is the proposed requirement that at least 20% of the members of any committee, subcommittee, or panel that is subject to the jurisdiction of a Standing Committee and that is responsible for providing advice with respect to trading rules or disciplinary rules be members of the exchange or association appropriate? Is the proposed minimum threshold adequate member representation to achieve the goal of fair representation? Should the proposed threshold be higher or lower than 20%?

Question 15. Is it appropriate to require that when the board considers any matter that is recommended by or otherwise is within the authority or jurisdiction of a Standing Committee, a majority of the directors who vote on the matter must be independent directors? Are there circumstances when this provision would be unnecessary?

Question 16. Is it appropriate to require that if any committee has the authority to act on behalf of the board, it must be composed of a majority of independent directors and that the board may not delegate to any committee not consisting solely of independent directors the authority to act on matters that otherwise are within the jurisdiction of a Standing Committee?

Question 17. Should the proposed rules give greater guidance on the matters that should be considered with respect to the annual performance self-evaluations and annual performance evaluation of the governance of the exchange or association by the Standing Committees?

Question 18. Is there a reason to deny SROs the flexibility of having a non-executive Chairman who is not an independent director? Do other provisions of the proposed governance rules make it unnecessary to require the Chairman to be an independent director if two individuals serve as Chairman and CEO? Should the proposed governance rules instead require that if the Chairman is not an independent director and two individuals serve as Chairman and CEO, a lead director should preside over executive sessions and over any Standing Committee meetings?

Question 19. Should the proposed governance rules require a complete separation of the positions of Chairman and CEO? Is the provision requiring the exchange or association to appoint a lead director to preside over executive sessions when a single individual serves as Chairman and CEO sufficient? Is it appropriate to require that the Chairman be prohibited from serving on a Standing Committee, unless the Chairman is an independent director?

Question 20. Are the provisions relating to the separation of regulatory functions from any market operations and other commercial interests of the exchange or association appropriate? Should the proposed governance rules require the regulatory function and market operations and other commercial interests of an exchange or association to be conducted in separate legal entities? What would be the consequences of any such requirement? Would such a requirement mitigate conflicts of interest? If so, how? Are there other requirements relating to the independence of the regulatory function that should be implemented?

Question 21. Is the proposal requiring each exchange and association to have a Chief Regulatory Officer appropriate? Are there other duties that a Chief Regulatory Officer should be required to perform? Are there other provisions that should be imposed to require his or her independence?

Question 22. Should the proposed governance rules be applied to other SROs, such as clearing agencies? Why?

Question 23. Is the requirement that officers and directors of an exchange or association not be subject to a statutory disqualification, as defined in Section 3(a)(39) of the Exchange Act, appropriate? Is there some other definition of statutory disqualification that is more appropriate? Should the definition be broader or narrower?

Question 24. Is the requirement that an exchange or association explicitly mandate that each director, in discharging his or her obligations as a director, reasonably consider all requirements applicable to the exchange or association under the Exchange Act broad enough?

Question 25. Should the proposed rules require that the exchange or association provide sufficient funding and other resources to permit the independent directors and the Standing Committees to retain independent legal counsel and other advisors in order to fulfill their responsibilities?

Question 26. Is the requirement that an exchange or association apply funds received from regulatory fees, fines or penalties only to fund programs and operations directly related to such exchange's or association's regulatory responsibilities appropriate? Is the scope of which funds would be included in the requirement clear? Is it broad enough, or are there other sources of remuneration that should be included? For instance, should issuer fees be considered regulatory fees?

Should the Commission define the term ''regulatory fees''?

Question 27. Should regulatory fees, fines, or penalties be allowed to be used to fund non-regulatory activities? If so, should there be any restrictions on activities for which such funds could be used?

Question 28. Instead of requiring exchanges and associations to use regulatory funds only to fund regulation, should the Commission permit an exchange or association to use regulatory funds for purposes other than to fund regulation if the exchange's or association's Regulatory Oversight Committee approves the use of the funds and the exchange or association submits to the Commission, pursuant to section 19(b)(2) and Rule 19b–4, both its stated policy, practice, or interpretation regarding committee approval and each proposed use of regulatory funds for other than regulatory purposes?

Question 29. Should the Commission enumerate in the proposed rules certain types of regulatory fees, fines or penalties that would fall within the prohibition? If so, what items should be included?

Question 30. Is the proposed requirement that an exchange or association implement policies and procedures to maintain the confidentiality of regulatory and certain other information appropriate?

Question 31. Is there any other type of information other than regulatory information and information required to be submitted to effectuate a transaction that an exchange or association should be required to keep confidential? Should such information include information gained in the course of applications for listing on the exchange?

Question 32. Should an exchange or association be allowed to disseminate such information (other than regulatory information), including order and trade data, in an aggregated form, as proposed? If so, are there any restrictions, in addition to those proposed, that should be required so that the information is truly aggregated?

Question 33. Is the proposed definition of ''regulatory information'' appropriate? Is it too broad? Or, should the prohibition on use of regulatory information for other than a regulatory purpose include information other than information gained in the course of carrying out regulatory obligations? If so, what information?

Question 34. Would the proposed limitations on disseminating regulatory information and information required to be submitted to effectuate a transaction restrict an exchange or association from being able to disseminate information that currently is disseminated by exchanges or associations? If so, how so?

Question 35. Should an exchange or association be allowed to disseminate order and trade data, or regulatory information, which is otherwise made public by a person other than the exchange, association, or an officer, director, employee, or agent of the exchange or association?

Question 36. Do commenters believe that it is necessary to have any ownership and voting limits?

Question 37. Should the proposed ownership and voting limitations in relation to interests in an exchange, association or a facility of an exchange or association apply to all other persons, besides members that are brokers or dealers? What specific concerns exist that imposing ownership and voting limits on other persons, not just members that are brokers or dealers, would serve to mitigate? If the Commission were to impose restrictions on other persons, should the limit be the same as for members that are brokers or dealers—20%—or should it be higher or lower? Upon which other persons should these restrictions be imposed?

Question 38. Should the Commission require that SROs impose ownership and voting limits on persons that are not statutory ''members'' but that own one or more memberships, or ''seats,'' in an exchange, but are not registered brokers or dealers and do not trade on or through the facilities of the exchange, but lease the trading right to a broker-dealer? If so, should it depend upon whether the person retains the voting rights associated with such membership?

Question 39. If the Commission were to impose ownership and voting restrictions on all persons, should the SRO and the Commission be able to permit persons to exceed the limit? If so, should the Commission impose requirements on any person that was permitted to exceed the limit? If so, what types of requirements? Should the person be required to agree to provide the Commission access to its books and records, and agree to cooperate with the Commission and the relevant SRO in the performance of their regulatory oversight responsibilities? Are there any other requirements that should be imposed?

Question 40. Is a 20% ownership and voting threshold the appropriate level? Are these thresholds too high? For instance, should the Commission prohibit ownership and voting over 10% (the level used in the definition of ''associate'' in Rule 12b–2)? Or 5% (the reporting threshold for Regulation 13D)? Or should these thresholds be higher than 20%?

Question 41. The Commission is proposing to limit a member's beneficial ownership in an SRO or facility of an SRO. The beneficiaries of an irrevocable trust are not generally deemed to beneficially own the securities in the trust, because the voting and investment power over those securities is typically held exclusively by a third party trustee. Should the Commission explicitly prohibit members from owning securities subject to the proposed prohibition through such an irrevocable trust? Are there any other forms of ownership that the Commission should require an SRO to prohibit, other than beneficial ownership?

Question 42. The Commission is proposing ownership and voting limits on members' ownership, and voting of interests, both in ''traditional'' mutually-owned SROs and in demutualized SROs. Is this appropriate? Should the Commission not limit ownership of seats, or memberships, in a mutually-owned SRO? If so, why should the Commission treat these SROs differently than demutualized SROs?

Question 43. Is there any special consideration that should be taken into account with respect to requiring a mutually-owned SRO to impose ownership and voting limits on its members' ownership in or voting of interests in the SRO and its facilities? For instance, if a member is entitled to only one vote even if it owns more than one seat or membership, would a limit on ownership be necessary? If so, how should such a limit be structured?

Question 44. Are there practical implementation issues that would be faced by exchanges and associations in devising rules to divest members that are brokers or dealers and their related persons of any interest in excess of that proposed to be permitted? What about rules reasonably designed to not give effect to the portion of a vote by a member that is a broker or dealer that is in excess of the proposed limits? If so, how could these issues be addressed?

Question 45. Are the proposed requirements that an exchange and association impose ownership and voting limits on its members that are brokers or dealers consistent with state law under which the SROs are governed? If not, please explain why that is the case.

Question 46. Should the Commission prohibit direct, but not indirect, ownership and voting over the proposed limits? Could a limit on direct ownership and voting—without a limit on indirect—easily be circumvented?

Question 47. The ownership and voting limitations as proposed would apply to ownership in or voting of interests in any facility of an exchange or association. Is this appropriate, or is it too broad? If too broad, what types of facilities should be included within the scope of the member ownership and voting limitations? How would the Commission achieve its goals by narrowing the ownership and voting limitations?

Question 48. The Commission requests comment on whether any broker-dealer members and their ''related persons'' currently own more than 20% of the interest in an exchange, association or a facility of an exchange or association. If so, the Commission requests comment on the length of time that an exchange or association should be given to allow such members to divest themselves of such interest.

Question 49. As proposed, a broker-dealer member of an exchange or association would be prohibited from owning and voting more than 20% of the securities of an exchange, association, or facility, which could include agreements not to vote. The Commission has not proposed any requirements on what would constitute a quorum for purposes of a shareholder vote, in part because broker-dealer members and other persons would be able to vote all the shares of stock they are entitled to own (*i.e.*, members can own and vote up to 20%), so there would not be a percentage of stock that is owned but not voted. The Commission recognizes, however, that a broker-dealer member theoretically could accumulate undetected ownership in violation of the 20% limit. If the member's interest was large enough, the member could, by not being present at a shareholder vote, keep a quorum from being present at a shareholder meeting. The Commission requests comment on whether it is necessary to require the exchange or association to amend its rules to prohibit such a scenario.

Question 50. Are the proposed definitions of ''affiliated,'' ''affiliated issuer,'' and ''affiliated security'' appropriate? Should the definitions be broader? Should they be narrower?

Question 51. Is the proposed definition of ''related persons'' too narrow? Or too broad? Is there any other relationship that should be included within the definition that is not? For instance, should the Commission include ownership that is acquired solely by being a member of a group?

Question 52. Is the proposed part of the definition of ''related person'' that includes any person associated with a member too broad? For example, should it be limited to those associated persons that possess, directly or indirectly, the power to direct or cause the direction of management and policies of the member, whether through the ownership of voting securities, by contract, or otherwise?

Question 53. The proposed ownership and voting limits would apply to members that are natural persons directly, if they are broker-dealers, or indirectly, through the member's associated broker or dealer. Should the Commission require that an SRO impose the ownership and voting limits directly on all members, or would it be sufficient to capture natural persons that are not brokers or dealers as ''related persons'' of their associated broker-dealer?

Question 54. Is the proposed definition of ''beneficial ownership'' appropriate for purposes of the proposed ownership limitation? Is it too narrow? Or is it too broad? What other definition would be appropriate? Should the Commission instead only require information to be filed with respect to record ownership rather than beneficial ownership? If so, how would that impact securities positions of a customer of the member for which the member holds in street name?

Question 55. How difficult would it be for an SRO to monitor ownership by broker-dealer members and their related persons under the proposed definition of related person? Would the proposed rule (Rule 17a–27) that would require broker-dealer members to report to the Commission and the relevant SRO ownership by the member and its related persons in excess of 5% help the SRO monitor the ownership and voting limits? To what extent would the proposed requirement that an SRO adopt rules permitting it to request information from its owners help SROs obtain the information they need?

Question 56. Should the Commission require exchanges and associations to allow members subject to the ownership and voting limits to solicit and receive revocable proxies under Regulation 14A of the Exchange Act, as the Commission has proposed? Or, would doing so undermine the purpose of the 20% voting limitation? Or, is not allowing ''open-ended proxies'' sufficient to mitigate any concern that the act of soliciting and receiving proxies would in and of itself provide a member the opportunity to exceed the 20% threshold? If so, would disallowing the exemption contained in Rule 14a–2(b)(2) under the Exchange Act be sufficient? Are there other situations that should be explicitly excluded from the proposed limitation?

Question 57. Should the Commission specify the manner in which an SRO must assure that if a member that is a broker or dealer violated the ownership and voting limits the exchange or association has an effective mechanism to divest a member and its related persons of any interest owned in excess of, or to not give effect to the portion of a vote in excess of, the 20% limitation? If so, what should the requirement be?

Question 58. Should the Commission require an exchange or association to have an independent party tabulate any shareholder vote, to help ensure compliance by the exchange or association and its broker-dealer members with the proposed voting limit? How should the Commission define ''independent party'' in this context?

Question 59. Are there other issues that an exchange's or association's code of conduct and ethics and governance guidelines should be required to address in addition to those identified in proposed Rules 6a–5(p) and (q) and 15Aa–3(p) and (q)?

Question 60. Are the proposed dates by which the exchange or association must file a rule change proposing the governance standards and by which the proposed rule change must be adopted by the Commission and operative by the SRO appropriate?

III. Proposed Regulation AL—National Securities Exchanges and Registered Securities Associations Listing Affiliated Securities

A. Background and Need for Proposed Regulation AL

As discussed above, competition among markets has increased dramatically over the past few years, and several SROs have demutualized or entered into arrangements with separate trading facilities.[251] As a demutualized entity, an SRO may become a publicly traded company and choose to list its securities on its own market. In addition, a facility of an SRO that has a separate legal existence and that is publicly traded currently may choose to list on its affiliated SRO. The owner of one facility of an SRO already has completed an initial public offering, and another SRO has filed a registration statement under the Securities Act with regard to its intended initial public offering.[252] The listing of securities issued by an SRO, the facility of an SRO, or an affiliate of either on the SRO would create a new conflict of interest

[251] *See supra* Section I.B.4. and note 61.

[252] *See supra* note 65.

with the SRO's statutory obligations as a regulator.

In particular, such ''self-listing'' raises questions as to an SRO's ability to independently and effectively enforce its own or the Commission's rules against itself or an affiliated entity, and thus comply with its statutory obligations under the Exchange Act.[253] For instance, the SRO might be reluctant to vigorously monitor for compliance with its initial and continued listing rules by the securities of an affiliated issuer or its own securities, and may be tempted to allow its own securities, or the securities of an affiliate, to be listed (and continue to be listed) on its market even if the security is not in full compliance with the SRO's listing rules. In addition, self-listing may exacerbate conflicts with the SRO overseeing competitors that also may be listed on, and thus regulated by, the SRO. For example, an SRO might choose to more strictly construe and apply its listing rules to the securities of a competitor that is listed on, or that seeks to list on, the SRO than it would for its own or an affiliate's securities. Or, an SRO might be reluctant to allow additional time for the securities of an unaffiliated issuer to regain compliance with a listing rule, or may allow more time for its own securities that are self-listed.

Trading of its own securities or the securities of an affiliated issuer on the SRO also raises similar potential conflict concerns, in that the SRO might choose to selectively enforce (or not enforce) its trading rules with respect to trading in its own stock or that of an affiliate so as to benefit itself. For example, the SRO may determine to look the other way with respect to improper trading in an affiliated security that creates the appearance of increased volume, such as through wash sales, or trading that artificially inflates or sustains the price of the stock, such as marking the close. In addition, the SRO may improperly pressure the specialist to stabilize the price of the stock. The SRO also may improperly discourage legal short sales or other types of legitimate trading practices that the SRO believed may negatively impact the value of the stock.

To date, the Commission has approved, through the rule filing process of Section 19(b) of the Exchange Act,[254] heightened reporting requirements in a particular instance in which an SRO ''self-listed'' securities issued by an affiliate.[255] Specifically, in anticipation of the listing of Archipelago Holdings (the parent company of Arca-Ex) on PCX, PCX amended its rules to require it to periodically report to the Commission regarding its oversight of the listing on PCX and trading on Arca-Ex of Archipelago Holdings' stock. PCX also amended its rules to require an annual independent audit of Archipelago Holdings' compliance with PCX's listing standards, a copy of which the exchange must provide to the Commission.[256] The Commission approved PCX's proposed rule change as consistent with the Exchange Act, stating that it would help protect against concern that PCX would not effectively enforce its rules with respect to the listing and trading of securities of an affiliate of the exchange or any entity that operates or owns a facility of the exchange.[257]

SROs currently have listing rules that would permit them to list and trade their own or ''affiliated'' securities without any additional requirements such as those adopted by PCX. Because of the conflict of interest raised by self-listing, which could result in an SRO being less vigilant in its obligations to enforce the securities laws and its own rules, the Commission is proposing additional requirements when an SRO lists and trades its own, or an affiliate's, securities. Proposed Regulation AL is designed to provide further assurance that SROs will carry out their regulatory responsibilities under the Exchange Act with respect to surveillance of affiliated securities and to provide the Commission a greater ability to monitor SROs' efforts in this regard. The Commission believes that the proposed rule would establish safeguards that would better ensure that the listing and trading of an affiliated security on an SRO complies with applicable rules of the SRO and the Commission. In addition, the Commission believes that the proposed rules would serve to mitigate the inherent conflict of interest between the SRO's responsibility to vigorously oversee the listing and trading of an affiliated security on its market and its own commercial and economic interests by providing the Commission with enhanced information and increased ability to monitor the SRO's surveillance of the affiliated security.

B. Description of Proposed Regulation AL

1. Definition of Affiliated Security

Proposed Regulation AL would define the term ''affiliated security''[258] to mean any security issued by an affiliated issuer, except any option exempt from the Securities Act pursuant to Rule 238 under the Securities Act[259] and any security futures product exempt from the Securities Act under Section 3(a)(14) of the Securities Act.[260] The term ''affiliated issuer'' would be defined to mean: (i) With respect to a national securities exchange, the national securities exchange, an SRO trading facility of the national securities exchange, an affiliate of the national securities exchange, or an affiliate of an SRO trading facility of the national securities exchange, and (ii) with respect to a registered securities association, the registered securities association, an SRO trading facility of the registered securities association, an affiliate of the registered securities association, or an affiliate of an SRO trading facility of the registered securities association.[261] The term ''SRO

[253] *See* Sections 6(b) and 15A(b) of the Exchange Act, 15 U.S.C. 78f(b) and 78*o*–3(b).

[254] 15 U.S.C. 78s(b).

[255] *See* Securities Exchange Act Release No. 50171 (August 9, 2004), 69 FR 50427 (August 16, 2004) (approving SR–PCX–2004–76, which places additional reporting requirements on the exchange if any affiliate of the exchange or any entity that operates and/or owns a trading system or facility of the exchange lists any security on the exchange). The Commission notes that the NASD did not impose additional requirements when the securities of Nasdaq, a facility of the NASD, began trading in the OTC Bulletin Board, a service operated by the NASD.

[256] *See id.*

[257] *See id.*

[258] *See* proposed Rule 800(a)(4).

[259] 17 CFR 230.238.

[260] 15 U.S.C. 77c(a)(14). *See* proposed Rule 800(a)(4). Standardized options and security futures products are issued and guaranteed by a clearing agency. Currently, all standardized options and security futures products are issued by the Options Clearing Corporation (''OCC''). The Commission proposes to exempt standardized options and security futures products from the definition of ''affiliated security'' because the value of these instruments is not related to the value of its issuer—*i.e.*, the OCC. Instead, their value is based on the value of the security underlying the option or security futures product. Accordingly, the Commission does not believe the same conflicts exist when an SRO lists and trades standardized options and security futures products issued by an affiliate as when an SRO lists and trades other securities issued by an affiliate.

[261] *See* proposed Rule 800(a)(3). ''Affiliate'' would be defined to mean, with respect to any person, any other person that directly or indirectly controls, is controlled by, or is under common control with, the person. *See* proposed Rule 800(a)(2). ''Control'' would be defined to mean the possession, direct or indirect, of the power to direct or cause the direction of the management and policies of a person, whether through ownership of voting securities, by contract, or otherwise. A person is presumed to control another person if the person (i) is a director, general partner or officer exercising executive responsibility (or having similar status or functions); (ii) directly or indirectly has the right to vote 25% or more of a class of voting securities or has the power to sell or direct the sale of 25% or more of a class of voting securities; or (iii) in the case of a partnership, has the right to receive, upon dissolution, or has contributed, 25% or more of the

Continued

trading facility'' would be defined to mean any facility of a national securities exchange or registered securities association that executes orders in securities [262] and would capture Nasdaq's SuperMontage system, Arca-Ex and the NYSE floor. It would not, however, include the NASD's Alternative Display Facility (''ADF'') because the ADF does not execute orders. Thus, Nasdaq would be considered an affiliated issuer of the NASD because it would be an SRO trading facility of the NASD, and Archipelago Holdings would be an affiliated issuer of PCX because it would be an affiliate of an SRO trading facility of PCX.[263] The proposed definitions of affiliated security, affiliated issuer, and SRO trading facility are intended to include the securities of any entity whose interests may be so closely aligned with the SRO's interests that the same concerns are raised about the ability of the SRO to oversee such security's listing and trading as are raised by the listing and trading of the SRO's own securities.

2. Initial Listing

Proposed Regulation AL would prohibit a national securities exchange or registered securities association from approving for listing an affiliated security unless such exchange's or association's Regulatory Oversight Committee certified that such security satisfies the exchange's or association's rules for listing.[264] This requirement is intended to provide for review by an independent body of a listing process that contains a conflict of interest so as to help ensure that the exchange or association effectively carries out its obligations under Section 6 or 15A of the Exchange Act,[265] as applicable. The Commission notes that only an exchange or association, as an SRO, is permitted to establish listing rules. For instance, the listing rules for securities traded on Nasdaq are rules of the NASD. Accordingly, the NASD, not Nasdaq, would be required to comply with proposed Regulation AL.

3. Continued Listing and Trading

In addition, if an affiliated security is listed on, approved for trading on, or trades pursuant to the rules of, an exchange or association, proposed Regulation AL would impose specific reporting and notice obligations on the exchange or association. The proposal would require the exchange or association to file a quarterly report with the Commission summarizing its monitoring of the affiliated security's compliance with its listing rules.[266] This proposed requirement could require an exchange or association to evaluate an affiliated security's compliance with applicable listing rules more frequently than other securities listed on the exchange or association to comply with the quarterly filing requirement.[267] The Commission believes that requiring this report to be filed quarterly would help ensure that the SRO monitors and reports its monitoring of compliance by the affiliated security with listing rules on a frequent enough basis so as to bring to light possible concerns, without being unduly burdensome. Pursuant to the proposed rule, the exchange would be required to provide in the report factual information regarding the affiliated security's compliance with each applicable rule, both for quantitative listing standards (*e.g.* market capitalization) and qualitative standards (*e.g.* that the majority of the board of directors be independent).

In addition, the exchange or association would be required to include in the quarterly report a summary of its surveillance of the trading of affiliated securities by its members.[268] Each SRO may employ different tools and methods in carrying out its statutory obligations under the Exchange Act to monitor trading in its market by its members. The Commission therefore is not proposing to delineate each item or type of factual information that must be included in the summary of surveillance of trading. The Commission believes, however, that this report should include factual information regarding surveillance alerts, exception reports, complaints and regulatory referrals, including the steps taken by the SRO with respect to problems identified in surveillance alerts, exception reports or complaints, in relation to trading in the affiliated security.

Finally, the Commission proposes to require the exchange's or association's Regulatory Oversight Committee to approve the report before it is filed with the Commission.[269] This requirement is intended to provide an independent level of review of the report prior to submission, and would ensure that the Regulatory Oversight Committee is made aware of potential concerns regarding the listing and trading of an affiliated security.

In addition to the quarterly report described above, the exchange or association would be required to file with the Commission annually a report prepared by a third party analyzing compliance by the affiliated security with applicable listing rules of the exchange or association.[270] This requirement is intended to provide a second level of review by an entity other than the SRO of an affiliated security's compliance with the SRO's listing rules. The exchange or association also would be required to provide its Regulatory Oversight Committee a copy of this report within five business days of its receipt so that this committee is made aware of any potential concerns regarding affiliated securities' compliance with SRO listing rules.[271] This report would be required to be filed within 60 calendar days of the end of the exchange's or association's fiscal year.[272] The Commission has proposed that a copy of this report be provided to the Commission within 60 days of the end of the exchange's or association's fiscal year to coincide with the proposed requirement for annually updating Form 1 and new Form 2.[273]

Pursuant to its existing rules, an exchange or association would review an affiliated security's compliance with applicable listing rules. If the exchange or association were to believe that the affiliated security is not in compliance with any applicable listing rule, the proposal would require the SRO to notify the affiliated issuer promptly.[274] This proposed requirement likely would require exchanges and associations to

capital. *See* proposed Rule 800(a)(5). The Commission proposes to define the term ''affiliate'' consistent with its existing definitions of such terms under the securities laws, including Rules 12b–2 and 10A–3 under the Exchange Act and Rule 144 under the Securities Act, and to define ''control'' consistent with its existing definitions of such terms under the securities laws, including Form 1, Form BD and Rule 300 of Regulation ATS. These definitions are intended to include any person that would have the potential ability to influence the operation of the person specified.

[262] *See* proposed Rule 800(a)(6). The term ''facility'' would have the meaning in Section 3(a)(2) of the Exchange Act and proposed Rule 15Aa–3 under the Exchange Act. *See* proposed Rule 800(a)(7).

[263] Securities issued by Nasdaq currently trade on the OTC Bulletin Board pursuant to rules of the NASD, and would be covered by proposed Regulation AL. If securities issued by Nasdaq were to trade on Nasdaq, they also would be covered as they would be approved for trading on, and would trade pursuant to the rules of, the NASD.

[264] *See* proposed Rule 800(b)(1).

[265] 15 U.S.C. 78f and 78*o*–3.

[266] *See* proposed Rule 800(b)(2)(i)(A). The exchange or association would be required to file the report not more than 30 calendar days after the end of each calendar quarter.

[267] The Commission understands, however, that most, if not all, SROs review compliance with listing rules on at least a quarterly basis.

[268] *See* proposed Rule 800(b)(2)(i)(B).

[269] *See* proposed Rule 800(c)(i).

[270] *See* proposed Rule 800(b)(2)(ii).

[271] *See* proposed Rule 800(c)(ii).

[272] *See* proposed Rule 800(b)(2)(ii).

[273] *See* proposed Rules 6a–2(b) and 15Aa–2(b).

[274] *See* proposed Rule 800(b)(2)(iii).

amend their current rules setting forth the process for reviewing continued listing to require prompt notification to affiliated issuers of any alleged non-compliance found during routine reviews.

The proposal also would require the exchange or association, within five business days of providing such notice to the affiliated issuer, to file a report with the Commission identifying the date the SRO alleged that the affiliated security was not in compliance, the listing rule at issue, the action the exchange or association proposes to take with respect to the affiliated security, and any other material information conveyed to the affiliated issuer in the notice of non-compliance (a ''non-compliance report'').[275] The exchange's or association's Regulatory Oversight Committee would be required to approve this non-compliance report prior to filing with the Commission.[276] Finally, the exchange or association also would be required to provide the Commission and the exchange's or association's Regulatory Oversight Committee with a copy of any response received from the affiliated issuer regarding its alleged noncompliance within five business days of receipt of the response.[277]

The Commission believes that requiring the exchange or association to provide to the Commission a non-compliance report and a copy of any response from an affected affiliated issuer within five business days of receipt would provide the Commission with timely information but still provide sufficient time for the exchange or association to prepare and file the report and to file the response. The Commission believes that requiring the Regulatory Oversight Committee to approve the non-compliance report before it is filed with the Commission, and requiring the Regulatory Oversight Committee to receive a copy of any response from the affiliated issuer, would make this committee aware of any compliance concerns regarding an affiliated security in a timely manner.

Pursuant to proposed Rule 800(e)(i), each report required to be filed under proposed Regulation AL would constitute a ''report'' within the meaning of Sections 17(a), 18(a), and 32(a) of the Exchange Act, and any other applicable provisions of the Exchange Act.[278] In addition, each report or response required to be filed pursuant to Regulation AL would be considered filed upon receipt by the Division of Market Regulation at the Commission's principal office in Washington, DC.[279]

4. Parity in Application of Listing and Trading Rules

Proposed Regulation AL also would require that, except as otherwise required by proposed Regulation AL, (i) any action taken by the exchange or association with regard to the listing of an affiliated security, including the time period granted to the affiliated issuer to come into compliance with any listing standard, be in compliance with the existing rules of the exchange or association and (ii) the exchange or association must not apply the same listing rules to affiliated securities in a manner materially different than the treatment afforded to other securities listed on the exchange or association.[280] This requirement would not preclude an exchange or association from amending its rules to apply stricter initial and continued listing standards to affiliated securities.[281] Additionally, any action taken by the exchange or association with respect to the trading of an affiliated security by the exchange's or association's members must be in compliance with the rules of the exchange or association and with federal securities laws, and must not be materially different than action taken with respect to the trading of other securities traded on the exchange or association.[282] These requirements are intended to help ensure that an exchange or association does not give preferential treatment to affiliated securities.

5. Exemption Provision

Proposed Rule 800(f) would establish procedures for the Commission to grant an exemption, upon written request or on its own motion, from the provisions of proposed Regulation AL, either unconditionally or on specified terms and conditions, if the Commission determines that such exemption is necessary or appropriate in the public interest and is consistent with the protection of investors. Pursuant to this provision, the Commission would consider and act upon appropriate requests for relief from the rule's provisions and consider the particular facts and circumstances relevant to each such request, the potential ramifications of granting any exemption, and any appropriate conditions to be imposed as part of the exemption.

C. Request for Comment

The Commission seeks general comments on all aspects of proposed Regulation AL as described above. In addition, the Commission requests that interested persons respond to the following specific questions:

Question 61. Proposed Regulation AL would place reporting and notice obligations on an exchange or association with respect to an affiliated security listed on, approved for trading on, or traded pursuant to the rules of, the exchange or association. As noted above, this would include the trading of securities issued by Nasdaq on the OTC Bulletin Board or Nasdaq, as well as the trading of an exchange's securities on the exchange or a facility of the exchange. Is the scope of the proposed rule broad enough? Is it too broad?

Question 62. How frequently should an SRO be required to file reports summarizing its monitoring of the affiliated security's compliance with the SRO's listing rules and surveillance of the trading of the affiliated securities by such SRO's members? Is quarterly reporting appropriate, or should it be more often? Or less frequent? Is this proposed reporting requirement appropriate at all?

Question 63. Should the Commission specify in the proposed rule the type of information an SRO should include in the quarterly report summarizing the SRO's surveillance of trading of affiliated securities by exchange members? For instance, should the Commission explicitly require the SRO to provide factual information on all exception reports, surveillance alerts, complaints, or regulatory referrals related to trading in the affiliated security? Is there any other particular information that should be specified?

Question 64. Under the proposal, an SRO has 60 calendar days after the end of its fiscal year to file with the Commission a report prepared by a third party analyzing compliance by the affiliated security with the SRO's listing rules. If an SRO found that an affiliated

[275] *See* proposed Rule 800(b)(2)(iv).

[276] *See* proposed Rule 800(c)(i).

[277] *See* proposed Rule 800(b)(2)(v) and (c)(ii).

[278] 15 U.S.C. 78q(a), 78r(a), and 78ff(a). Section 17(a) of the Exchange Act imposes recordkeeping requirements on national securities exchanges and registered securities associations; Section 18(a) of the Exchange Act imposes liability for false or misleading statements with respect to a material fact in applications, reports, or documents filed pursuant to the Exchange Act or any rule or regulation thereunder; and Section 32(a) of the Exchange Act provides for penalties against any person that willfully violates any provision of, or that willfully and knowingly makes, or causes to be made, any false or misleading statements with respect to a material fact in any application, report, or document required to be filed under the Exchange Act or any rule or regulation thereunder.

[279] *See* proposed Rule 800(e)(ii).

[280] *See* proposed Rule 800(d)(i) and (ii).

[281] Of course, any such amendment would have to be filed with the Commission pursuant to Section 19(b) of the Exchange Act and the rules thereunder. 15 U.S.C. 78(s) and 17 CFR 240.19b–4.

[282] *See* proposed Rule 800(d)(iii).

security were not in compliance with any applicable listing rule of the SRO, the SRO would be required to file a report notifying the Commission within five business days of notifying the affiliated issuer of its noncompliance. In addition, the SRO would be required to provide the Commission with a copy any response from the affiliated issuer within five business days of receipt. Finally, the SRO would be required to provide its Regulatory Oversight Committee with a copy of the annual report and the response from an affiliated issuer within five business days. Are these time periods appropriate? Should they be shorter? Should they be longer?

Question 65. Should the third party preparing the annual report regarding compliance by the affiliated security with applicable listing rules of the SRO be required to be independent of the SRO? If so, how should independence be defined? Or should the SRO be allowed to have its regular auditor conduct the analysis and prepare the report, as proposed?

Question 66. Should the Commission require a third party to periodically audit an SRO's surveillance of trading in the affiliated security as well as compliance with listing rules? If so, should the Commission require that entity to be independent of the exchange or association? If so, how should independence be defined? If so, what type of entity would be qualified to undertake this analysis? What would be the cost to the SRO of hiring a third-party to conduct the audit?

Question 67. Should the Commission itself have primary responsibility for assessing compliance by the affiliated security with the exchange's or association's listing rules? If so, should the Commission determine initial compliance, as well as continued compliance? If both, how often should the Commission conduct a review?

Question 68. Are the definitions of ''affiliated issuer,'' ''affiliated security'' and ''SRO trading facility'' appropriate? Are they broad enough? For instance, should any entity be included that is not included within the proposed definition of ''affiliated issuer?'' Are they too broad?

Question 69. Should the definition of ''affiliated security'' include options and security futures products? If so, why?

Question 70. Should the Commission exclude from the definition of ''affiliated security'' any security issued by an investment company that tracks an index, such as an ETF? If so, why?

Question 71. Is the proposed definition of ''control'' appropriate? Should it be broader? Or more narrow?

Question 72. Should the Commission impose additional requirements beyond those proposed here on SROs that wish to list or trade an affiliated security? Or should the Commission prohibit outright the listing and trading on the SRO of an affiliated security? What impact would doing so have on competition, if the issuer was forced to list the security on a competing market?

Question 73. Should ''self listing'' be allowed only if the securities also are listed on another market and such other market has made an independent initial listing determination? If so, should the self-listing SRO be required to abide by the actions of the other market with regard to continuing compliance with listing rules and decisions to delist? Would the listing rules of the two markets need to be comparable?

Question 74. Should the Commission require an SRO that lists or trades an affiliated security to contract with another SRO to monitor an affiliated security's compliance with the affiliated SRO's listing rules, and to monitor trading in the affiliated security by the affiliated SRO's members?

Question 75. Are there other requirements that the Commission should impose to address the conflicts of interest?

IV. Disclosure by SROs

A. Overview of Proposed Amendments to Registration Forms for Exchanges and Associations

The Commission proposes to amend the procedures for the registration of exchanges and associations and the filing of amendments and supplements to the registration application. These proposals are intended to bring greater transparency to the governance structure of SROs and to their regulatory programs and processes, and to provide the mechanism for more timely disclosure of the specified information. The enhanced disclosure requirements are designed to assure that users of exchange or association facilities, investors, and others have access to current and relevant information about SROs, including their administration, regulatory programs and ownership structure. Moreover, improving the transparency of SROs would enable their members, market participants, investors and regulators to more readily monitor the effectiveness and performance of SROs and promote greater accountability by SROs with respect to their Exchange Act obligations.

In addition, the proposals should assist the Commission in its oversight of exchanges and associations and help make its oversight programs more effective by requiring better and more frequent disclosure of important SRO information, particularly with respect to the governance of SROs, their regulatory programs and expenditures on those programs, and the ownership of SROs and their facilities. Along with proposed Rule 17a–26 under the Exchange Act,[283] which would require SROs to provide the Commission with periodic information about specific aspects of their regulatory programs, the proposals to improve SRO transparency should help the Commission better identify and respond to regulatory issues and concerns promptly and effectively.

Further, the proposals would provide for greater uniformity in the regulatory treatment of exchanges and associations by mandating similar disclosure for both exchanges and associations. Under the current disclosure framework, exchanges are required to provide more detailed information on Form 1 than associations are required to submit on applicable registration forms. In the Commission's view, there does not appear to be a sound reason today for maintaining differing disclosure requirements. National securities exchanges and registered securities associations are charged with nearly identical obligations under the Exchange Act.[284] Among other requirements, both exchanges and associations must be so organized and have the capacity to carry out the purposes of the Exchange Act and comply with, and enforce their members' compliance with, the federal securities laws and rules thereunder and SRO rules.[285] The proposal therefore seeks to more closely align the regulatory disclosure framework for exchanges and associations.

B. Description of Registration Processes

1. Registration as a National Securities Exchange or Exemption From Such Registration Based on Limited Volume

Section 6(a) of the Exchange Act[286] generally provides that an exchange may be registered as a national securities exchange by filing with the Commission an application for

[283] *See* infra Section V.

[284] *See supra* Section I.A.

[285] Sections 6, 15A, and 19 of the Exchange Act, 15 U.S.C. 78f, 78*o*–3, and 78s, among others, establish a statutory scheme with respect to the responsibilities imposed on and Commission oversight of SROs. The statutory scheme vests SROs that are national securities exchanges and registered securities associations with nearly identical responsibilities and imposes upon the Commission virtually the same oversight requirements with respect to such exchanges and associations.

[286] 15 U.S.C. 78f(a).

registration in such form as the Commission, by rule, may prescribe. The application must contain the rules of the exchange and such other information and documents as the Commission, by rule, may prescribe as necessary or appropriate in the public interest or for the protection of investors.[287]

Currently, under Rule 6a–1 under the Exchange Act, an exchange applying for registration as a national securities exchange, or for an exemption from such registration based on limited volume, is required to file its application with the Commission on Form 1.[288] Form 1 requires applicants to provide general identifying information (*e.g.,* name, address, telephone, and legal status), as well as more specific information, as set forth in exhibits attached to the Form.[289] In addition, Rules 6a–1 and 6a–2 under the Exchange Act[290] set forth the application procedures and timing requirements for registration as a national securities exchange, or for an exemption from registration as an exchange based on limited volume, and the procedures and timing requirements for amending the application.[291]

2. Registration as a Registered Securities Association or Affiliated Securities Association

Section 15A of the Exchange Act[292] generally provides that an association of brokers and dealers may be registered as a registered securities association or as an affiliated securities association[293] by filing with the Commission an application for registration in such form as the Commission, by rule, may prescribe. The application must contain the rules of the association and such other information and documents as the Commission, by rule, may prescribe as necessary or appropriate in the public interest or for the protection of investors.[294]

Rules 15Aa–1 and 15Aj–1 under the Exchange Act[295] set forth the application process and timing requirements for registration as a registered securities association or an affiliated securities association, and the process for amending or supplementing such application. Rule 15Aa–1 under the Exchange Act requires an association applying for registration as a registered securities association or an affiliated securities association to file its application for registration on Form X–15AA–1.[296] Currently, Form X–15AA–1 requires an applicant to provide general organizational information (*e.g.,* name and addresses of applicant and information about the applicant's officers, directors, and committee chairs and members). An applicant also is required to identify its rules that pertain to (1) admission to association membership; (2) fair representation of membership; (3) dues and expenses; (4) business conduct; (5) protection of members; (6) disciplining of members; (7) affiliated associations; (8) dealings with nonmembers; and (9) enforcement of association rules. An applicant is required to provide additional information to the Commission as set forth in Exhibits A, B, and C to Form X–15AA–1.[297] Rule 15Aj–1 currently requires a registered securities association or affiliated securities association to update its registration statement promptly after the discovery of any inaccuracy in the statement or in any amendment or supplement thereto, either on Form X–15AJ–1 or on Form X–15AJ–2, depending on the circumstances.[298]

C. Proposed Revisions to Form 1 and New Form 2

We propose to harmonize the procedures for application as a national securities exchange and as a registered securities association and for the submission of amendments to such applications. Under the proposals, an applicant for registration as a national securities exchange or for an exemption from exchange registration based on limited volume,[299] would be required to file revised Form 1, and an applicant for registration as a registered securities association or an affiliated securities association would be required to file new Form 2.[300] The revised Form 1 and new Form 2 also would be used by an exchange or association, respectively, for submitting all amendments. Because new Form 2 would serve as the form for both initial registration of registered securities associations and for all amendments, the Commission proposes to repeal Forms X–15AJ–1 and X–15AJ–2. In addition, the proposals would require exchanges and associations to disclose more detailed information than currently is required about their governance, regulatory functions, and ownership in the registration

[287] *Id.*

[288] *See* Rule 6a–1 under the Exchange Act, 17 CFR 240.6a–1, and Form 1, 17 CFR 249.1.

[289] Currently, Form 1 requires the following material to be included as exhibits: (1) a copy of the constitution, articles of incorporation or association, and by-laws (Exhibit A); (2) a copy of all written rulings, settled practices having the effect of rules, and interpretations of any governing board or committee of the exchange (Exhibit B); (3) information regarding all affiliates and subsidiaries (Exhibit C); (4) unconsolidated financial statements for each subsidiary or affiliate of the exchange for the latest fiscal year (Exhibit D); (5) a description of the manner of operation of the electronic trading system to be used to effect transactions on the exchange (Exhibit E); (6) complete set of applications for membership, participation or subscription to the exchange or for a person associated with a member, participant, or subscriber of the exchange (Exhibit F); (7) financial statements, reports or questionnaires required of members, participants, subscribers, or other users (Exhibit G); (8) listing applications, any agreements required to be executed in connection with listing and a schedule of listing fees (Exhibit H); (9) audited consolidated financial statements for the last fiscal years of the exchange prepared in accordance with, or reconciled to, United States generally accepted accounting principles (Exhibit I); (10) information with respect to officers, governors, members of all standing committees, or persons performing similar functions, who presently hold or have held their offices or positions during the previous year (Exhibit J); (11) information with respect to persons with 5% direct ownership for non-member owned exchanged (Exhibit K); (12) description of the exchange's criteria for membership (Exhibit L); (13) information with respect to any members, participants, subscribers or other users and the information pertaining thereto (Exhibit M); and (14) a schedule of securities listed on the exchange, securities admitted to unlisted trading privileges, securities admitted to trading on the exchange which are exempt from registration under Section 12(a) of the Exchange Act, 15 U.S.C. 78*l*, and other securities traded on the exchange (Exhibit N).

[290] 17 CFR 240.6a–1 and 240.6a–2.

[291] *See infra* Section IV.D. for a description of the requirements of Rule 6a–2 under the Exchange Act.

[292] 15 U.S.C. 78*o*–3.

[293] Section 15A(d) of the Exchange Act, 15 U.S.C. 78*o*–3(d), generally provides that an association shall not be registered as an affiliated securities association unless it appears to the Commission that: (1) such association will be affiliated with an association registered as a registered securities association and (2) such association and its rules satisfy the requirements of Section 15A(b)(2)–(10) and (12). To date, no entity has registered with the Commission as an affiliated securities association.

[294] Section 15A(a) of the Exchange Act, 15 U.S.C. 78*o*–3(a).

[295] 17 CFR 240.15Aa–1 and 240.15Aj–1.

[296] *See* Rule 15Aa–1 under the Exchange Act, 17 CFR 240.15Aa–1, and Form X–15AA–1, 17 CFR 249.801.

[297] The exhibits to Form X–15AA–1, 17 CFR 249.801, require the following information: (1) copies of the association's constitution, charter, articles of incorporation or association, with all amendments thereto, and of its existing by-laws and of any rules or instruments corresponding to the foregoing (Exhibit A); (2) a balance sheet of the association together with an income and expense statement (Exhibit B); and (3) an alphabetical list of all members of the association and the member's principal place of business (Exhibit C).

[298] 17 CFR 240.15Aj–1. *See infra* Section IV.D. for a description of Rule 15Aj–1 under the Exchange Act.

[299] *See* Section 5 of the Exchange Act, 15 U.S.C. 78e.

[300] For clarity, we use the term ''revised Form 1'' to refer to the Form 1, as proposed to be amended by this rulemaking. Currently, securities associations are required to register on Form X–15AA–1 and to file amendments and supplements on Forms X–15–AJ–1 and X–15–AJ–2. The Commission proposes to redesignate Form X–15AA–1 as Form 2 and to amend Form 2 consistent with the proposals contained in this release. For clarity, we refer to the registration form for registered securities associations, as proposed to be amended, as ''new Form 2.''

application and subsequent amendments thereto.

The Commission also proposes to amend Rules 6a–2, 15Aa–1, and 15Aj–1 under the Exchange Act (and to redesignate Rule 15Aj–1 as Rule 15Aa–2), as discussed below.[301] Among other things, the proposed changes to these rules would require exchanges and associations to submit any amendments to revised Form 1 or new Form 2 on a more timely basis. Further, the proposals would mandate the posting of amendments to revised Form 1 and new Form 2 on the Internet Web site of the exchange or association.[302]

The following subsections will set forth the scope of the proposed disclosures required by revised Form 1 and Form 2; describe those Exhibits to revised Form 1 and new Form 2 that would require enhanced disclosures; and discuss the current Exhibits to Form 1 that the Commission proposed to retain in revised Form 1 (in the same or substantially the same for mat) and to incorporate into new Form 2.

1. Scope of Disclosures Required by Revised Form 1 and New Form 2

We propose to require more detailed information, and, in some cases, new information from exchanges and associations on revised Form 1 and new Form 2. These disclosures would supplement the Commission's proposals to impose new substantive standards with respect to SRO governance, administration and ownership, and SRO reporting requirements.[303]

Further, the revisions to the registration forms for exchanges and associations also are intended to update and modernize the forms by taking into account new ways in which SROs are organized. Thus, the requirements of revised Form 1 and new Form 2 would be applicable to exchanges and associations, respectively, and also any ''facility'[304] (including an ''SRO trading facility'') [305] of an exchange or association that is a separate legal entity, and any ''regulatory subsidiary'' [306] of an exchange or association.[307] By expressly referring to a facility and regulatory subsidiary, the forms are intended to elicit complete information about the exchange or association. In our view, the trend in recent years of SROs to delegate to separate legal entities functions arising out of their obligations under the Exchange Act necessitates enhanced disclosure about those regulatory subsidiaries that perform the duties on behalf of an SRO. Moreover, an SRO trading facility may be contained in a separate entity and may be owned or operated by the SRO or another entity.[308] The Commission notes that even if an SRO enters into an agreement or arrangement to delegate certain self-regulatory duties to a subsidiary, the SRO itself, and not the regulatory subsidiary, retains the ultimate responsibility and primary liability under the Exchange Act for self-regulatory failures. The SRO's obligations under the Exchange Act extend to the operation and administration of any regulatory subsidiary.

Therefore, revised Form 1 and new Form 2 expressly would require exchanges and associations to provide information about any facility and regulatory subsidiary in various Exhibits. This disclosure should more fully inform market participants and the public of the structure and governance of exchanges and associations in today's market environment and thus should help promote investor confidence in the administration of U.S. securities markets.

2. Composition, Structure, and Responsibilities of the Board

Proposed Exhibit C of revised Form 1 and new Form 2 would require each exchange and association, respectively, to describe the composition, structure, and responsibilities of its board.[309] This description would include a list of all directors who presently hold or have held their positions during the previous year, indicating each director's name, title, dates of commencement and termination of term or position, and type of business in which the director is primarily engaged. This information currently is required by Exhibit J to Form 1 and would be incorporated into revised Form 1 and new Form 2.

The Forms also would require the identification of any board member who is an independent director and the basis for the affirmative determination that such board member is independent. The determination of whether a director is an ''independent director'' would be made according to the criteria set forth in proposed new Rules 6a–5(b)(12) and 15Aa–3(b)(13).[310] Exchanges and associations also would be required to provide a description of any affiliations or relationships that reasonably could affect the director's judgment or decision-making as a director, *i.e.*, whether the director has a material relationship [311] that would render the director ineligible to be considered an ''independent'' director. The Commission notes that the proposed disclosures are intended to bolster the requirements of proposed Rules 6a–5 and 15Aa–3 under the Exchange Act.[312] The Commission further believes that such disclosures would aid market participants, investors, and the Commission in determining whether exchanges and associations are complying with the proposed requirement that their boards be composed of a majority of independent directors and in ascertaining any affiliations and relationships that would preclude directors from being considered independent.

In addition, if the board's Chairman and CEO are the same person, the exchange or association would be required to indicate the director that is designated as the lead independent director. These disclosure items would correspond with the requirement in proposed Rules 6a–5(m)(3) and 15Aa–

[301] *See infra* Sections IV.D. through IV.F., inclusive.

[302] The proposals would not require the posting of an applicant's initial Form 1 or Form 2 on the applicant's Web site, because the Commission generally files the initial application on its own Web site when it publishes the applicant's proposed rules for public comment.

[303] *See supra* Section II., relating to proposed new Rules 6a–5 and 15Aa–3 under the Exchange Act, and Section V., relating to proposed new Rule 17a–26.

[304] For purposes of revised Form 1, the term ''facility'' would have the same meaning as in Section 3(a)(2) of the Exchange Act, 15 U.S.C. 78c(a)(2). For purposes of new Form 2, the term ''facility'' would have the same meaning as in proposed Rule 15Aa–3(b)(11). *See* proposed Instructions to revised Form 1 and new Form 2.

[305] The term ''SRO trading facility'' would mean any facility of a national securities exchange or registered securities association that executes orders in securities. *See* proposed Instructions to revised Form 1 and new Form 2.

[306] The term ''regulatory subsidiary'' would be defined as any person that, directly or indirectly, is controlled by the exchange or association and provides, whether pursuant to contract, agreement or rule, regulatory services to or on behalf of the exchange or association. *See* proposed Instructions to revised Form 1 and new Form 2. For example, several SROs have delegated to one or more subsidiaries the responsibility to carry out certain functions arising out of the SRO's obligations under the Exchange Act. Examples include BOXR, which is a wholly-owned options regulatory subsidiary of the BSE, and PCX Equities, a wholly-owned subsidiary of PCX. *See, e.g.*, Securities Exchange Act Release Nos. 49065, *supra* note 80 and 44983, *supra* note 49.

[307] Therefore, the exchange or association must file as part of revised Form 1 or new Form 2 the information specified in various Exhibits with respect to any facility that is a separate legal entity and any regulatory subsidiary of the exchange or association. These Exhibits are Exhibits A, B, C, D, E, F, G, H, and I, which are discussed below.

[308] *See supra* note 64 and accompanying text.

[309] For a discussion of proposed Exhibits A and B to revised Form 1 and new Form 2, *see* Section IV.C.13.

[310] *See* Section II.B.2.a.

[311] *See supra* note 106 and accompanying text for the definition of ''material relationship.''

[312] *See* proposed Rules 6a–5 and 15Aa–3.

3(m)(3) that if a single individual serves as both Chairman and CEO, the board must designate an independent director as a lead director to preside over executive sessions of the board.[313]

Exhibit C also would require a discussion of the authority of the board, including any powers of the board to delegate its authority to management or any executive board or committee. Further, the exchange or association would have to describe the lines of authority between the Chairman and CEO (or between any lead independent director and the CEO, when the CEO is the Chairman). The Commission believes that such disclosure should provide market participants, investors, and the Commission with a better understanding of the administration of the exchange or association.

Finally, Exhibit C of revised Form 1 and new Form 2 would obligate the exchange or association to state the method for interested persons to communicate their concerns regarding any matter within the authority or jurisdiction of a Standing Committee directly to the independent directors. These disclosure items would correspond with the requirement in proposed Rules 6a–5(c)(9) and 15Aa–3(c)(9) that the board establish a method for interested persons to communicate their concerns regarding any matter within the authority or jurisdiction of a Standing Committee directly to the independent directors.[314] The proposed disclosure also would aid in implementing proposed Rules 6a–5(m)(3) and 15Aa–3(m)(3), which would require that the board publicly disclose the lead director's name and a means by which interested parties may communicate with the lead director.[315] The Commission believes that requiring the disclosure of such processes would make more evident to market participants, investors, and the public the opportunity to communicate with independent directors and increase their understanding of the governance and administration of exchanges and associations.[316]

3. Composition, Structure, and Responsibilities of Committees and Executive Boards

Proposed Exhibit E of revised Form 1 and new Form 2 would require a description of the structure, composition, and responsibilities of any executive board or committee of the exchange or association (including board, non-board, and mixed board/non-board committees and executive board committees).[317] The description would include a list of members of any executive board and each committee, with identifying information that includes each member's name, title, dates of term of office or position, and primary business, which is information currently required by Form 1 and would be incorporated into revised Form 1 and new Form 2. Exhibit E also would require disclosure of any affiliations or relationships that reasonably could affect the committee member's independent judgment or decision-making. Further, this Exhibit to the Forms would require the submission of a chart illustrating the complete governance structure of the exchange or association and any facility or regulatory subsidiary of the applicant.

The Commission believes that requiring greater information about the governance structure of exchanges and associations would aid market participants, investors, and the public with greater insight into the manner in which the exchange or association is organized. Moreover, requiring identifying information about executive board directors and members of the committees of an exchange or association should aid market participants, investors, and the Commission in determining whether the executive board and committee members of exchanges and associations have any affiliations or relationships that could influence their judgment. Further, the Commission believes that requiring disclosure of the SRO's complete governance structure in a chart would present important information in a clear format and thus assist investors and market participants in their understanding of the SRO's organization from a governance perspective.

In addition, the exchange or association would be required to provide a copy of the written charter of each Standing Committee of the exchange's or association's board. Under proposed Rules 6a–5 and 15Aa–3, each Standing Committee must have a written charter that sets forth the Committee's purpose and responsibilities. In our view, requiring the disclosure of Standing Committee charters would prove useful to market participants, investors, and the public, because they could gain an understanding of the duties of key committees of exchanges and associations. The Commission further notes that this requirement would supplement the provisions of proposed Rules 6a–5 and 15Aa–3, which would require the Standing Committees of the boards of exchanges and associations to have written charters.[318]

In the Commission's view, the disclosure requirements of Exhibit E would further the Exchange Act's requirements for registration that exchanges and associations be so organized and have the capacity to carry out their statutory obligations.[319]

4. Governance

a. Governance Guidelines. Exchanges and associations would have to provide as part of proposed Exhibit F to revised Form 1 and new Form 2 a copy of their governance guidelines and the governance guidelines of any regulatory subsidiary. We believe that requiring exchanges and associations to disclose their governance guidelines would further heighten SRO awareness of the need for good governance and help foster SROs' compliance with their obligations under Sections 6 and 15A of the Exchange Act.[320] Increased transparency also would aid market participants, investors and the public by providing them with greater knowledge of the governance guidelines of exchanges and associations. Further, the proposed disclosures would supplement the provisions under proposed Rules 6a-5(q) and 15Aa-3(q), which would require exchanges and associations, respectively, to adopt governance guidelines and would set forth the minimum criteria that the governance guidelines would address.[321]

b. Code of Conduct and Ethics. Proposed Exhibit F to revised Form 1 and new Form 2 would require exchanges and associations to file a copy of the code of conduct and ethics for directors, officers, and employees of the exchange or association. In addition, the exchange and association would be required to disclose any waivers of the code of conduct and ethics for directors, officers, or employees. The Commission believes that requiring disclosure of exchanges' and associations' codes of conduct and ethics should provide

[313] *See supra* Section II.B.7.

[314] *See supra* Section II.B.2.b.

[315] *See supra* Section II.B.7.

[316] *See* Sections 6(b)(1) and 15A(b)(2) of the Exchange Act, 15 U.S.C. 78f(b)(1) and 78*o*–3(b)(2).

[317] For example, the NYSE maintains a Board of Executives composed of representatives of members, significant investors, and listed companies. *See* NYSE Constitution, Article V, Section 2.

[318] *See supra* Section II.B.3. For purposes of proposed Rules 6a–5 and 15Aa–3, the term ''Standing Committees' means the following committees of the board: Nominating Committee, Governance Committee, Compensation Committee, Audit Committee, and Regulatory Oversight Committee, or their equivalent.

[319] *See* 15 U.S.C. 78f (b) and 78*o*–3(b).

[320] 15 U.S.C. 78f and 78*o*–3.

[321] *See supra* Section II.B.10.

market participants, investors, and the public with useful information about the ethical standards that these SROs have set for their directors, officers, and employees. In addition, disclosure of waivers of the code of conduct and ethics should give market participants, investors, the public, as well as regulators, the opportunity to evaluate the board's performance with respect to adherence to the code of conduct and ethics and the circumstances under which it has determined to grant waivers. Further, the proposal would complement the requirements of proposed Rules 6a–5(p) and 15Aa–3(p), which would require exchanges and associations to adopt a code of conduct and ethics for directors, officers, and employees, and also would require the board or appropriate board committee to approve any waiver of the code of conduct and ethics.[322]

5. Organizational Charts

Proposed Exhibit G to revised Form 1 and new Form 2 would require exchanges and associations to submit a chart or charts illustrating fully the internal organizational structure of the exchange and association (and of any facility or regulatory subsidiary). The charts would need to indicate the internal divisions or departments, the responsibilities of each such division or department, and the reporting structure of each division or department, including its oversight by board committees or their equivalent. The charts should be sufficiently detailed to permit the Commission and the public to gain a complete understanding of the manner in which the exchange or association is structured and, along with the proposed governance chart requirement of Exhibit E, should be able to provide the Commission and the public with an overview of the SRO's organizational and governance structure. The Commission believes that disclosure of these organizational charts would be an important means by which to provide market participants, investors, and regulators with a better understanding of the governance structure of exchanges and associations.

6. Regulatory Program

Proposed Exhibit H to revised Form 1 and new Form 2 would require exchanges and associations to describe fully their regulatory programs. The description would include information such as member firm regulation, market surveillance, enforcement, listing qualifications, arbitration, rulemaking and interpretation, as well as the process for assessment and development of regulatory policy. Exchanges and associations would be required to submit a copy of any delegation plan or other contract or agreement relating to regulatory services that are provided to the exchange or association by a regulatory subsidiary of the exchange or association, another SRO, or a regulatory subsidiary of another SRO. The Commission believes that such enhanced transparency from an exchange or association would better inform market participants and investors about the exchange's or association's regulatory program. Moreover, such disclosure would aid the Commission in its oversight and evaluation of the exchange's and association's compliance with Exchange Act provisions.

Further, Exhibit H would require a description of the independence of the regulatory program from the market operations or other commercial interests of the exchange or association. The proposed disclosure is intended to provide transparency in connection with substantive requirements set forth in proposed new Rules 6a–5(n) and 15Aa–3(n), which would require exchanges and associations to establish standards and procedures to provide for the independence of their regulatory programs from their market operations or other commercial interests.[323]

In addition, each exchange and association would be required to discuss fully any new material regulatory issues that have arisen or any material events that have taken place in the past year, including any technology or trading issues, that relate to or otherwise may affect the exchange's or association's regulatory responsibilities or the operation of its regulatory program. The Commission believes that the discussion of such issues or events would be focused on those issues and events that would be considered by the exchange or association to be material to an assessment of the overall effectiveness of the regulatory program. Exhibit H would require exchanges and associations to discuss the effect these material issues or events may have on the mission, strategy, and future operations of the exchange's or association's regulatory program. Exchanges and associations also would be required to discuss generally any material changes that are planned for their regulatory programs. The Commission expects that the discussion would center on those changes that would impact the exchange's or association's regulatory program and its ability to fulfill its regulatory obligations under the Exchange Act.

The Commission believes that mandating enhanced disclosure regarding exchanges' and associations' regulatory programs would substantially facilitate the ability of the Commission and the public to assess the strengths and vulnerabilities of these programs. The Commission further believes that requiring exchanges and associations to provide details concerning their regulatory programs would enable regulators to conduct more effective oversight of these SROs' compliance with their obligations under the Exchange Act. In addition, requiring disclosure of an exchange's or association's regulatory program and its self-analysis of regulatory issues could help an exchange or association to focus on its capability to meet its statutory obligations under the Exchange Act[324] and to pursue necessary changes and improvements in its regulatory program.

7. Audited Financial Statements and Other Financial Information

Proposed Exhibit I to revised Form 1 would retain the current requirement that exchanges include audited financial statements for the applicant's latest fiscal year, which are prepared in accordance with (or in the case of a foreign applicant, reconciled with) U.S. generally accepted accounting principles.[325] We are proposing to incorporate this requirement in new Form 2.[326] In the Commission's view, the financial statement requirements currently imposed on exchanges should be applied to associations as well because, under the statutory framework, the obligations of exchanges and associations are nearly parallel. In addition, the exchange or association would be required to file audited financial statements for any facility of an exchange or association that is a separate legal entity and for any regulatory subsidiary.

Moreover, Exhibit I to these Forms would specify that the audited financial statements would need to be prepared

[322] *See supra* Section II.B.10.

[323] *See supra* Section II.B.8.

[324] *See, e.g.,* 15 U.S.C. 78f, 78*o*–3, and 78s.

[325] This requirement is part of Exhibit I to current Form 1.

[326] Exhibit B to current Form X–15AA–1 requires a securities association to provide a balance sheet within 30 days of the filing of the Form, together with an income and expense statement. The Commission believes that the proposed financial disclosure requirements set forth in proposed Exhibit I to revised Form 1 and new Form 2 would provide a more comprehensive view of the finances of an association and better aid the public and the Commission in their understanding of how the association would meet its obligations under Sections 15A and 19 of the Exchange Act. 15 U.S.C. 78*o*–3 and 78s. Therefore, Exhibit B to current Form X–15AA–1 would not be retained in new Form 2.

by a registered public accounting firm.[327] This requirement mirrors a standard recently imposed on reporting issuers, and conforms to existing Form 1 by retaining the requirement that exchanges include audited financial statements for the applicant's latest fiscal year.[328] The Commission believes that disclosure of audited financial statements would permit market participants, investors, and the Commission to better understand the financial resources and decisions of exchanges and associations, so as to determine whether they continue to comply with their obligations under the Exchange Act.[329]

Exhibit I to revised Form 1 and new Form 2 also would require exchanges and associations to provide more detailed financial information as a means to supplement the financial information SROs currently are required to provide. Under the proposal, the following categories of financial information would be required for the current fiscal year, and would need to be compared to the same figures for the prior fiscal year and estimated figures for the next fiscal year.

a. Budget and Revenues Devoted to Regulatory Activities. We propose to require exchanges and associations to disclose their regulatory expenses as a proportion of their total budget, and separately as a proportion of their total annual revenues. Pursuant to this provision, exchanges and associations would be required to disclose the aggregate amounts that they expend on regulatory activities, as well as the amounts that they expend on certain subcategories of regulatory activities, including supervisory activities (*e.g.,* routine examinations and oversight of member activity conducted in the regular course of business), surveillance activities (*e.g.,* manual and automated surveillance to ensure compliance with rules, such as trading rules and financial responsibility rules), and disciplinary activities (*e.g.,* enforcement activities). We propose to require the disclosure of this financial data, in part, to allow the Commission and the public to assess more fully the adequacy of the resources devoted by exchanges and associations to their regulatory programs and how these financial determinations affect their capacity to be able to carry out the purposes of the Exchange Act.[330]

b. Revenues and Expenses. Proposed Exhibit I to revised Form 1 and new Form 2 would require exchanges and associations to disclose the dollar amount of their revenues and expenses of their regulatory programs, with detailed itemization within the following broad categories: revenues; direct expenses; and allocated expenses. Exchanges and associations should provide this information for each area of their regulatory programs, such as surveillance, supervision, and discipline, and provide aggregate data for all program areas. The Commission believes that these uniform categories would provide useful information to market participants, investors, and the Commission by relaying an overview of the finances of exchanges and associations that are related to regulatory programs.

Each itemized category of revenue or expense should be accompanied by a description that permits an objective assessment of the nature of the revenues or expenses included within each category, annotated as appropriate. Proper descriptions of the itemized categories are especially important given the variation currently among the exchanges and the NASD in the way they report their itemized financial information. For example, an exchange or association should specify the underlying components or otherwise provide a description of the nature of an item labeled ''member technology fees'' to allow a complete understanding of the scope of that item.

Each of the three broad categories (revenues, direct expenses, and allocated costs) should be subdivided and itemized as specified in Exhibit I, and at a minimum, would have to include the items specified in Exhibit I to revised Form 1 and new Form 2. With respect to revenues, the Commission proposes to require exchanges and associations to provide general information on the main categories of revenues that are reported by exchanges and associations. To the extent that an exchange or association does not report a category of revenue that would be required by the Exhibit, the exchange or association should note this fact.

In particular, Exhibit I would require exchanges and associations to disclose revenues by fee categories, including regulatory fees, transaction and transaction services fees, and market information fees. The Commission notes that the category of ''regulatory fees'' would include all fees charged and earned by an exchange or association, including all member dues and assessments, that are assessed for the purpose of funding the operation of the exchange's or association's regulatory program. Exchanges and associations would be required to itemize, by category, all such regulatory fees. Disclosure of this information should allow market participants, investors, and the Commission to better assess the adequacy of the funding sources supporting an exchange's or association's regulatory program.

In addition, Exhibit I would require exchanges and associations to disclose other member dues and assessments not used for the purpose of funding regulation, as well as their transaction fees, transaction services fees, trading privileges fees, and similar fees. As with the regulatory fees, these member dues, transaction fees, and trading fees would need to be itemized by category. Exhibit I also would require exchanges and associations to disclose their revenues earned from market information fees, including market data fees, itemized by product. The proposed disclosure of this information would provide market participants, the public, and the Commission with an understanding of the other primary sources of revenue for exchanges and associations and, in particular, would permit the assessment of the relative adequacy of an exchange's or association's expenditures on its regulatory program as a proportion of its overall revenues.

Exhibit I also would require the disclosure of other categories of revenue, along with a general catch-all category. In particular, exchanges and associations would need to detail their revenues from fines and penalties resulting from disciplinary and enforcement actions, fees paid by issuers, including listing fees and issuer services, and investments of the exchange or association, including dividend and interest income. With respect to the ''other revenues'' catch-all category, an exchange or association would be required to itemize and footnote the amount disclosed to allow market participants, investors, and the Commission to obtain an understanding of the nature of the categories that comprise the ''other revenues'' category. The disclosure of these additional categories of revenue would allow market participants, investors, users of the SRO's facilities, the public and the

[327] The term ''registered public accounting firm'' would have the same meaning as under Section 2(a)(12) of the Sarbanes-Oxley Act of 2002, 15 U.S.C. 7201(a)(12). Currently, Exhibit I to Form 1 contains the requirement that audited financial statements for an exchange be covered by a report prepared by an independent public accountant.

[328] *See infra* Section IV.C.13.d. for a discussion of Exhibit J to revised Form 1 relating to financial statements of affiliates.

[329] For example, Sections 6(b)(4) and 15A(b)(5) of the Exchange Act require that the rules of exchanges and associations provide for the equitable allocation of reasonable dues, fees, and other charges among its members and issuers and other persons using its facilities. 15 U.S.C. 78f(b)(4) and 78*o*–3(b)(5).

[330] *See* Sections 6(b)(1) and 15A(b)(2) of the Exchange Act, 15 U.S.C. 78f(b)(1) and 78*o*–3(b)(2).

Commission to obtain a more complete understanding of an exchange's or association's total annual revenues, thereby permitting them to assess the adequacy of the exchange or association's resources devoted to fulfilling self-regulatory responsibilities.

Exhibit I would require exchanges and associations to disclose direct and allocated expenses that are incurred in connection with their regulatory activities. Direct expenses refer to the amounts an exchange or association spends on its regulatory department or unit as well as amounts expended in the performance of its regulatory activities, while allocated expenses refer to the portion of expenses incurred by non-regulatory personnel and systems which are attributed by the exchange or association, in whole or in part, to the performance of regulatory activities. The disclosure of this information would allow market participants, investors, users of the SRO's facilities, and the Commission to ascertain expenditures by an exchange or association on regulatory activities and compare those expenditures with the exchange's or association's revenues generally. The Commission stresses, however, that the amount spent by an exchange or association on its regulatory programs is not, by itself, an indication of the quality of the exchange's or association's regulatory program. Rather, an exchange's or association's expenditures relating to its regulatory program is only one factor that the Commission considers in assessing the overall adequacy of the SRO's regulatory program.

With respect to direct expenses, an exchange or association would be required to disclose the expenses it incurs in connection with its supervision of members, surveillance activities, and disciplinary activities. Specifically, Exhibit I would require exchanges and associations to disclose the aggregate personnel costs for their regulatory employees, including compensation and benefits, as well as provide compensation schedules for the Chief Regulatory Officer and all other senior regulatory personnel.[331] The Commission expects that these compensation schedules would include all forms of compensation including base compensation, bonuses, and benefits. In addition, exchanges and associations would be required to disclose expenses associated with training programs relating to the regulatory function of the exchange or association. Market participants, investors, users of the SRO's facilities, and the Commission could use this information to assess the level of compensation that is part of the SRO's regulatory budget, as well as the resources devoted to training the exchange's or association's regulatory personnel.

In addition, exchanges and associations would be required to disclose certain expenses that they incur in connection with regulatory services, including all expenses in connection with routine and for-cause examinations, investigations, and enforcement actions, with each category reported separately. As the Commission proposes that the expense categories to be disclosed in Exhibit I would be mutually exclusive, for clarity's sake, the Commission believes that this category should include expenses incurred that are not already reported under another category, such as personnel expenses. The reporting of this information would allow market participants, investors, users of the SRO's facilities, and the Commission to assess the adequacy of resources devoted by an exchange or association to its examination, investigatory and disciplinary regulatory activity. Similarly, Exhibit I would require the disclosure of information technology expenses, broken down by categories including data center costs, systems hardware and software, systems consultant fees, and electronic surveillance systems. The information technology expenses to be disclosed under this provision would include automated surveillance and information technology support provided to regulatory personnel. To the extent an exchange or association has entered into a contract or agreement with a regulatory subsidiary or another SRO to provide regulatory services to or on behalf of the exchange or association, the Commission believes that the costs associated with the contract or agreement should be disclosed separately. Finally, with respect to direct expenses, Exhibit I would require an exchange or association to disclose its occupancy and other overhead expenses, all professional services, such as independent auditors or attorneys, any depreciation and amortization, and any other expenses itemized as appropriate.

For allocated regulatory expenses incurred by non-regulatory departments that directly involve or relate to an exchange's or association's regulatory function, the Commission proposes to require exchanges and associations to disclose several basic categories in sufficient detail to allow market participants, investors, users of the SRO's facilities, and the Commission to assess the nature and extent of regulatory activities performed by non-regulatory personnel or groups. Specifically, Exhibit I would require exchanges and associations to disclose personnel expenses, based on a stated percentage of employee hours devoted to regulation-related activities, as well as information technology expenses, occupancy and other overhead expenses, and other allocated costs including, but not limited to, legal fees related to regulatory activities and expenses of regulatory and business conduct committees.

Exchanges and associations also would be required to provide an itemization of their non-regulatory expenditures, including, but not limited to, personnel expenses, program expenses, systems and other technology expenses, consultants and advisors, and overhead. The disclosure of non-regulatory expenditures would provide market participants, investors, users of the SRO's facilities, and the Commission with a frame of reference against which they could consider an exchange's or association's regulatory expenditures as a portion of the exchange's or association's other expenses when using the information to assess the exchange's or association's regulatory expenditures devoted to fulfilling its self-regulatory responsibilities.

The purpose of the proposed financial disclosure requirements relating to an exchange's or association's regulatory program is to provide enhanced transparency of the regulatory and non-regulatory revenues and expenses of exchanges and associations. Accordingly, market participants, investors, users of the SRO's facilities, and the public generally, as well as the Commission, would be able to better assess, among other things, the adequacy of resources devoted by an SRO to its regulatory program and the way in which the exchange or association has utilized those resources. The assessment would be useful to the Commission and others in determining whether the exchange or association is meeting its obligations under Sections 6, 15A, and 19 of the Exchange Act, among other statutory provisions, and the rules thereunder and enforcing compliance by its members with the Exchange Act and rules thereunder and the SRO's own rules.[332] The proposed disclosures relating to regulatory revenue, in

[331] The exhibit would not require exchanges and association to identify their senior regulatory personnel by name in the compensation schedule, though identification according to position would be necessary to complete the schedule.

[332] 15 U.S.C. 78f, 78*o*–3, and 78s.

particular those relating to regulatory fees, fines and penalties, and to regulatory expenses, should help the Commission review an exchange's or association's compliance with the requirements in proposed Rules 6a–5(n)(4) and 15Aa–3(n)(4) that an exchange or association use monies received from regulatory fees, fines, or penalties only to fund the regulatory operations of the exchange or association.

c. Other Financial Disclosures. The Commission also proposes to require disclosure of a number of additional items relating to the financial condition of an exchange or association (and any separate facility or regulatory subsidiaries). In many cases, these disclosures are modeled on those disclosure requirements applicable to reporting issuers. The Commission believes that similar transparency with respect to exchanges and associations would provide market participants, investors, members of the public, and the Commission with greater knowledge to permit an assessment of how specified financially-related matters could impact an exchange's or association's performance of its statutory obligations to oversee its members and facilities. [333]

First, proposed Exhibit I would require a discussion of information necessary to an understanding of the financial condition of the exchange or association and any material changes in its financial condition. [334] Exchanges and associations also would be required to disclose all charitable contributions of the applicant (whether made directly or indirectly) in excess of $1,000 to a charity in which an executive officer or director of the applicant, or any of their immediate family members, is an executive officer or director of the charity. This proposed requirement would enable market participants, users of the exchange's or association's facilities, the public, and the Commission to be apprised of larger charitable donations where there is a nexus between officers and directors of the exchange or association, and officers and directors of the charitable organization.

Further, under Exhibit I, the exchange or association would have to incorporate a discussion of any unusual or infrequent events or transactions or any significant economic changes that have had a material effect on the financial condition of the exchange or association, and any known demands, commitments, events or uncertainties that would result in or are reasonably likely to result in a material change in financial condition. [335] The discussion should focus on events and uncertainties known to management that would cause reported financial information not to be necessarily indicative of future financial condition.

The Commission also would require a description of any significant business development involving the exchange or association, including a reorganization, merger or consolidation, acquisition or disposition of significant assets, or any other material change in business or operations. [336]

In addition, proposed Exhibit I would require exchanges and associations to describe all material contracts and all material related party transactions. In this context, material contracts and related party transactions would be those to which the exchange or association, and any facility or regulatory subsidiary is a party; any director, nominee for director, officer, member, lessee, or any immediate family member [337] of any of the foregoing persons is also a party; and either the amount involved exceeds $60,000 or it is not a contract made in the ordinary course of business of the exchange or association and any facility or regulatory subsidiary. The Commission notes that these proposals regarding material contracts and related party transactions, and the $60,000 minimum amount triggering disclosure, is consistent with the requirement for listed companies in Item 404 of Regulation S–K. [338] The Commission believes that similar required disclosures for exchanges and associations should help the Commission and the public in assessing an exchange's or association's compliance with the proposed requirements in Rules 6a–5 and 15Aa–3 that the board of an exchange or association be composed of a majority of independent directors.[339] Such disclosures should aid the Commission and the public in the determination of whether a director is independent.

Further, Exhibit I would require a description of the material commitments of the exchange or association for expenditures as of the end of the latest fiscal period, and indicate the general purpose of such commitments and the anticipated source of funds needed to fulfill such commitments.[340]

Finally, Exhibit I would require the submission of a table detailing the compensation of the exchange's or association's top five most highly compensated executives, disclosed in a manner consistent with the table required of reporting companies.[341] The mandated disclosure would include all compensation (including perquisites) and would be presented in a table comparable to that required of public companies. In addition, Exhibit I would require a description of the material terms of the employment agreements of the five most highly compensated executives of the applicant and would require the exchange or association to provide a description of the compensation provided to members of its board. In the Commission's view, the information presented in the compensation table regarding the SRO's five most highly compensated executives, the description of the material terms of their employment contracts, and the description of the compensation provided to members of the SRO's board of directors would prove useful to the Commission and the public in determining whether the compensation accorded to directors and executives appears reasonable or presents conflicts of interest that may impact the SRO's capacity to carry out the purposes of the Exchange Act and rules thereunder and the SRO's own rules.

The Commission believes that all of the financial and other related disclosures proposed to be disclosed as part of proposed Exhibit I should assist the Commission and the public in assessing the vigor of the regulatory programs of exchanges and associations. As SROs, exchanges and associations have been accorded a public trust to oversee their members and, when they

[333] *See, e.g.*, Sections 6(b)(1), 6(b)(5), 15A(b)(2) and 15A(b)(6) of the Exchange Act, 15 U.S.C. 78f(b)(1), 78f(b)(5), 78*o*–3(b)(2) and 78*o*–3(b)(6).

[334] This requirement is similar to disclosure requirements imposed on registered companies pursuant to Item 303 of Regulation S–K, 17 CFR 229.303; however, the Commission has tailored the proposed requirement to the operations of exchanges and associations. The Commission believes that requiring similar disclosure about an exchange's or association's financial condition would help the Commission and the public to determine whether the SRO has the capacity to be able to carry out the purposes of the Exchange Act. *See* Sections 6(b)(1) and 15A(b)(2) of the Exchange Act, 15 U.S.C. 78f(b)(1) and 78*o*–3(b)(2).

[335] *See id.*

[336] *See id.*

[337] The term ''immediate family member'' would mean a person's spouse, parents, children, and siblings, whether by blood, marriage, or adoption, or anyone residing in such person's home. *See* proposed Instructions to revised Form 1 and new Form 2.

[338] *See* Item 404(a) of Regulation S–K, 17 CFR 229.404(a). *See also* NASD Rule 4350(h) (defining ''related party transactions'' as transactions required to be disclosed pursuant to Regulation S–K).

[339] *See* proposed Rules 6a–5(c)(i) and 15Aa–3(c)(i).

[340] *See supra* note 334.

[341] *See* Item 402 of Regulation S–K, 17 CFR 229.402.

operate markets, remove impediments to and perfect the mechanism of a free and open market and a national market system and protect investors and the public interest, among other requirements.[342] Requiring greater disclosure of financial and other information about the regulatory programs of exchanges and associations should enable market participants, investors, and the Commission to more easily ascertain how well SROs abide by their statutory responsibilities. For these reasons, the Commission has determined to propose these enhanced disclosures of financial and other related information by exchanges and associations.

8. Relationship Between SROs, Facilities, and Their Affiliates

Proposed Exhibit P to revised Form 1 and new Form 2 would require exchanges and associations to provide an organizational chart showing the relationship between and among the exchange or association, any facility of the exchange or association, and any affiliate of the exchange, association, or facility of the exchange or association.[343] Exhibit P to revised Form 1 and new Form 2 also would require disclosure about the nature and organizational structure of the exchange, association, any facility, and any affiliate, including legal name, form of organization, and ownership structure.[344]

Exchanges and associations would be required to further disclose whether the exchange, association, facility or affiliate is a reporting issuer under Sections 12 of the Exchange Act,[345] and whether it is registered with the Commission as a broker or dealer, investment adviser, or otherwise.[346] Information also would be required concerning whether and how any facility or affiliate possesses the power, directly or indirectly, to direct or cause the direction of the management and policies of the exchange or association, whether through ownership of voting securities, by contract, or otherwise.[347] In addition, Exhibit P would require that exchanges and associations provide a description concerning the ability of any facility or affiliate to exert any influence over the exchange's or association's regulatory responsibilities.[348]

In view of the trend toward demutualization of SROs, and the increased competitive pressures under which all SROs operate, the Commission believes that the disclosures required in Exhibit P should provide relevant information to the public and the Commission about the relationships among exchanges, associations, their facilities and their respective affiliates, so that the public and Commission might better evaluate how exchanges and associations fulfill their statutory responsibilities under Sections 6 and 15A of the Exchange Act.[349] In today's rapidly evolving marketplace, the disclosures proposed to be required in Exhibit P should provide greater transparency regarding the relationships among SROs, their facilities, and their affiliates, and whether those entities have the ability to control the SRO, thus enabling members, market participants, investors, and the Commission to more readily monitor the effectiveness and performance of SROs and promote greater accountability by SROs with respect to their Exchange Act obligations to comply with, and enforce compliance by their members with, their rules and the federal securities laws.

9. Ownership

Proposed Exhibit Q to revised Form 1 and new Form 2 would require that exchanges and associations provide enhanced disclosures describing any class or series of outstanding securities or other ownership interest of the exchange, association, or a facility of the exchange or association (each would be defined as a ''Disclosure Entity''), and information on persons owning more than 5% of such class of securities or other ownership interest and the nature and extent of such ownership.[350] The 5% reporting threshold and the information proposed to be required to be disclosed about such ownership is modeled on the beneficial ownership reporting requirements of the Williams Act, embodied in Sections 13(d) and 13(g) of the Exchange Act and the rules and regulations thereunder.[351] These Exchange Act provisions are intended to provide information to the issuer and the marketplace about accumulations of securities that may have the potential to change or influence control of an issuer.[352] Similarly, the intent of the proposed disclosure requirements in proposed Exhibit Q to revised Form 1 and new Form 2 is to provide the Commission, members of an exchange or association, persons who trade on the facilities of an exchange or association, investors, and the SRO itself, more detailed information about which persons or certain groups of persons potentially could control or influence the SRO.

To begin, proposed Item 1 of Exhibit Q would require exchanges and associations to provide a description of each class or series of outstanding securities or other ownership interest (including debt) of each Disclosure Entity that includes: (1) The title of the class of securities or other ownership interest; (2) the total number of securities or other ownership interests issued and outstanding; (3) any restrictions on ownership, voting, transfers, or other disposition of such securities or other ownership interest; (4) if the securities are publicly traded, the market(s) where they trade; and (5) any other material information relating to ownership of the Disclosure Entity.[353]

Further, pursuant to proposed Item 2 of Exhibit Q, exchanges and associations would be required to provide certain information with regard to any person (alone or together with its Related Persons [354]) that directly or indirectly beneficially owns more than 5% of any class of securities or other ownership interest in a Disclosure Entity (''5% Owner'').[355] Background details would

[342] *See* Sections 6(b)(1), 6(b)(5), 15A(b)(2) and 15A(b)(6) of the Exchange Act, 15 U.S.C. 78f(b)(1), 78f(b)(5), 78*o*–3(b)(2) and 78*o*–3(b)(6).

[343] *See supra* note 230 for the proposed definition of the terms ''affiliate'' and ''control.''

[344] *See* Items 1, 2 and 3 of proposed Exhibit P to revised Form 1 and new Form 2.

[345] 15 U.S.C. 78*l*.

[346] *See* Items 4 and 5 of proposed Exhibit P to revised Form 1 and new Form 2.

[347] *See* Item 6 of proposed Exhibit P to revised Form 1 and new Form 2.

[348] *See* Item 7 of proposed Exhibit P to revised Form 1 and new Form 2.

[349] 15 U.S.C. 78f and 78*o*–3.

[350] Currently, Exhibit K to Form 1 requires certain disclosures from exchanges that have one or more owners, shareholders, or partners that are also not members of the exchange, including general information about persons owning 5% or more of the ownership interest in the exchange. Proposed Exhibit Q to revised Form 1 and new Form 2 is intended to solicit more detailed and relevant disclosure about significant owners from all exchanges and associations.

[351] 15 U.S.C. 78m(d) and (g).

[352] *See* Securities Exchange Act Release Nos. 37403 (July 3, 1996), 61 FR 36521 (July 11, 1996) and 26598 (March 6, 1989), 54 FR 10552 (March 14, 1989).

[353] *See* Item 1 of proposed Exhibit Q to revised Form 1 and new Form 2.

[354] The term ''Related Persons'' is proposed to be defined in the Instructions to revised Form 1 and new Form 2 to mean (1) with respect to any member of the exchange or association that is a broker or dealer, any related person as defined in Rules 6a–5 or 15Aa–3 under the Exchange Act; or (2) with respect to any other person: (a) Any affiliate of such person and (b) in the case of a person that is a natural person, any immediate family member of such person, or any immediate family member of such person's spouse, who, in each case, has the same home as such person or who is a director or officer of the Disclosure Entity or any of its parents or subsidiaries. *See also supra* Section II.B.9.

[355] Proposed Item 6 of Exhibit Q to revised Form 1 and new Form 2 would require that for each Disclosure Entity that is a partnership, the exchange or association provide a list of all general partners

be required to be provided about any such person, including their name, address, place of organization (for corporations), principal business or occupation, and whether the person is an officer or director of the Disclosure Entity.[356]

Furthermore, for each person that is a 5% Owner, proposed Item 2.c. of Exhibit Q would require the exchange or association to state the aggregate number and percentage of shares of a class of securities or ownership interest of such security that are beneficially owned.[357] In addition, the exchange or association would be required to indicate the aggregate number of shares or ownership interest as to which there is sole power to vote or to direct the vote, shared power to vote or to direct the vote, sole power to dispose or to direct the disposition, or shared power to dispose or to direct the disposition.[358] If any other person is known to have the right to receive or the power to direct the receipt of dividends from, or the proceeds from the sale of, such securities or other ownership interest, a statement to that effect would need to be included, and if such interest related to more than 5% of the class, such person would need to be identified.[359] Pursuant to proposed Item 3 of Exhibit Q, the exchange or association would be required to separately identify each Related Person whose ownership in the Disclosure Entity is included in the calculation of beneficial ownership required to be disclosed pursuant to proposed Item 2 of Exhibit Q, and provide the same ownership information as for the original person as would be required by proposed Item 2.c. of Exhibit Q. The exchange or association also would be required to disclose if the Related Person is an officer or director of the Disclosure Entity.[360]

The Commission notes that the proposed disclosure relating to ownership in an exchange, association, or a facility of an exchange or association would cover both direct and indirect ownership. Thus, if the exchange or facility were owned by a holding company, the exchange or association would be required to provide ownership information with regard to any person, alone or together with its related persons, that owned more than 5% of the holding company. The Commission emphasizes that the exchange's or association's responsibility to provide any disclosure pursuant to proposed Exhibit Q to revised Form 1 or new Form 2 would be independent of the obligation of any person to file with the Commission, and provide to the issuer, a Schedule 13D or 13G. Therefore, an exchange or association would be required to undertake its own due diligence to obtain and provide to the Commission the information that would be required by proposed Items 2 and 3 of Exhibit Q.

An exchange or association also would be required to state whether and how the 5% Owner, alone or with any Related Persons, possesses the power, directly or indirectly, to direct or cause the direction of the management or policies of the Disclosure Entity, whether through ownership of voting securities, by contract, or otherwise (*i.e.,* whether they have ''control'').[361] Finally, exchanges and associations would be required to describe any contracts, arrangements, understandings or relationships (legal or otherwise) among the persons and Related Persons identified in Exhibit Q, and between such persons and any other person, with respect to any securities or other ownership interest of the Disclosure Entity, including but not limited to transfer or voting of any of the securities or other ownership interest, finder's fees, joint ventures, loan or option arrangements, put or calls, guarantees of profits, division of profits or loss, or the giving or withholding of proxies, and to name the persons with whom such contracts, arrangements, understandings or relationships have been entered into.[362] The description also would be required to include such information for any of the securities or other ownership interest that are pledged or otherwise subject to a contingency the occurrence of which would give another person voting power or investment power over such securities or other ownership interest. However, disclosure of standard default and similar provisions contained in loan agreements would not be necessary.[363]

In order to more easily obtain this information, proposed Rules 6a–5(o)(5) and 15Aa–3(o)(5) would require the rules of an exchange or association to provide a mechanism for the exchange or association to obtain information from any owner of the exchange, association, or a facility of the exchange or association relating to such owner's ownership in and voting of such interest.[364] The Commission requests comment on the ability of an exchange or association to obtain the information regarding its owners and its owners' related persons necessary to calculate and report beneficial ownership interest in compliance with the proposed requirements of proposed Exhibit Q to revised Form 1 and new Form 2.

The Commission believes that each item of information proposed to be disclosed pursuant to Exhibit Q would be pertinent to providing a complete picture of which person or group of persons may control a significant stake in an SRO. The Commission believes that these disclosures proposed to be required by Exhibit Q relating to ownership of the exchange, association or a facility would provide the Commission, as well as members and users of the exchange or association (or the facilities of the exchange or association), with up-to-date information regarding a change or potential change in control of an exchange or association. In addition, requiring an SRO to gather and publicly disclose this information should provide greater accountability by the SRO with respect to the performance of its regulatory obligations and further its ability to operate in compliance with the requirements of Sections 6(b)(1) and 15A(b)(2) of the Exchange Act[365] that it be so organized and have the capacity

and those limited and special partners that have the right to receive upon dissolution, or have contributed, more than 5% of the partnership's capital.

The term ''beneficially owns'' is proposed to be defined to have the same meaning, with respect to any security or other ownership interest, as set forth in Rule 13d–3 under the Exchange Act, as if (and whether or not) such security or other onwership interest were a voting equity security registered under Section 12 of the Exchange Act; *provided that*to the extent any person beneficially owns any security or other ownership interest solely because such person is a member of a group within the meaning of Section 13(d)(3) of the Exchange Act, such person shall not be deemed to beneficially own such security or other ownership interest for purposes of Form 1 or Form 2, unless such person has the power to direct the vote of such security or other ownership interest. *See* proposed Instructions to revised Form 1 and new Form 2 and *supra* note 226.

[356] *See* Items 2.a. and 2.b. of proposed Exhibit Q to revised Form 1 and new Form 2.

[357] For purposes of making this percentage determination, a class of securities would be deemed to consist of the amount of the outstanding securities of such class, exclusive of any securities held by or for the Disclosure Entity (the issuer), or a subsidiary of the Disclosure Entity. *See* Item 4 of Exhibit Q to revised Form 1 and new Form 2.

[358] *See* Items 2.c.i. of proposed Exhibit Q to revised Form 1 and new Form 2.

[359] *See* Items 2.c.ii. of proposed Exhibit Q to revised Form 1 and new Form 2. A listing of the shareholders of an investment company registered under the Investment Company Act of 1940 or the beneficiaries of an employee benefit plan, pension fund or endowment fund would not be required.

[360] *See* Item 3.c. of proposed Exhibit Q to revised Form 1 and new Form 2.

[361] *See* Item 5 of proposed Exhibit Q to revised Form 1 and new Form 2.

[362] *See* Item 7 of proposed Exhibit Q of revised Form 1 and new Form 2.

[363] *See id.*

[364] *See* proposed Rules 6a–5(o)(5) and 15Aa–3(o)(5) and discussion in Section II.B.9.

[365] 15 U.S.C. 78f(b)(1) and 78*o*–3(b)(2).

to be able to carry out the purposes of the Exchange Act and to comply with, and enforce compliance by its members and persons associated with members with, the Exchange Act and rules thereunder and with the rules of the exchange, and the requirements of Sections 6(b)(8) and 15A(b)(9) of the Exchange Act [366] that the rules of the exchange not impose any burden on competition not necessary or appropriate in furtherance of the purposes of the Exchange Act. Requiring the disclosure of this information also will allow the Commission and the public to more readily monitor the SROs' performance of their obligations. In addition, the Commission expects that the disclosure of information concerning persons owning more than 5% of an exchange, an association or a facility of an exchange or association should help the Commission more effectively oversee and regulate SROs and their facilities, especially if the SRO or facility is owned and controlled by persons who are not regulated by the Commission.

10. Listing and Trading of Affiliated Securities

Proposed Exhibit T of revised Form 1 and new Form 2 would require that exchanges and associations provide information with respect to securities listed and traded on the SRO or its facilities.[367] Among other disclosures, an exchange or association would be required to provide an explanation of the process for monitoring initial and ongoing compliance with the listing rules of the exchange or association of a security issued by the SRO, or a trading facility, or an affiliate of the SRO or trading facility, if such security were listed on the exchange or association. In addition, the exchange or association would have to explain the process for monitoring trading of the security by the members of the exchange or association, as well as the process for enforcing the exchange's or association's listing rules, trading rules, and the federal securities laws with respect to the listing and trading of the securities.[368] The Commission believes that, given the conflicts inherent in ''self-listing,'' [369] enhanced public transparency concerning the ''self-listing'' of an exchange or association (or listing by an SRO facility or affiliate of the exchange, association, or facility) should result in a greater degree of accountability by the SRO with respect to monitoring the listing by and trading of the ''affiliated'' security on the SRO or a facility of the SRO in compliance with its statutory obligations under Sections 6(b)(1) and 15A(b)(2) of the Exchange Act.[370] In addition, providing this information to the Commission should further the Commission's ability to monitor the SRO's regulation of such listing and trading of the affiliated security.

11. Location of Books and Records

Proposed Exhibit U to revised Form 1 and new Form 2 would require exchanges and associations to provide the name and address of the location where their books and records are maintained. The Commission believes that requiring exchanges and associations to provide details concerning the location of their books and records should enable the Commission to conduct more effective and efficient oversight of these SROs. The proposed disclosure also is intended to reinforce a proposed change to Rule 17a–1 under the Exchange Act [371] that would require, for the existing five-year record retention period, exchanges and associations (and registered clearing agencies and the Municipal Securities Rulemaking Board) to maintain their books and records in the United States. This requirement is intended to assure that such books and records may be made easily available for inspection and examination by the Commission pursuant to Section 17 of the Exchange Act,[372] particularly in an instance where an exchange or association is owned by a person or entity located outside the U.S.

12. Miscellaneous Matters Specific to New Form 2

Currently, applicants for registration as an affiliated securities association must provide the name of the registered securities association that the applicant association seeks affiliation with, and an estimation of the annual dollar volume of transactions effected by members of the applicant association.[373] The Commission believes that this information, which is specifically asked of applicants for affiliated securities association status, should be included on new Form 2,[374] because such identifying information is useful to the Commission in its determination of whether the association satisfies the requirements set forth in Section 15A(d) of the Exchange Act.[375]

In addition, applicants for registration as a registered securities association or an affiliated securities association are now asked to identify the rule or rules of the association that deal with membership; fair representation of members; dues and expenses; business conduct and protection of members; disciplining of members; and affiliated associations.[376] Because new Form 2 would require applicants to provide the Commission with a copy of the association's rules, the Commission believes that separately requesting that applicants identify their rules by category would be unnecessary. Therefore, the Commission proposes to omit these inquiries from new Form 2.

13. Current Disclosures To Be Retained in Revised Form 1 and Added to New Form 2

The Commission is proposing to retain in revised Form 1 and add to new Form 2 several exhibits that currently are required by Form 1 and Form X–15AA–1. In addition, the Commission proposes to incorporate in new Form 2 several disclosures currently required by Form 1. The Commission believes that the information proposed to be disclosed in these exhibits should aid the Commission in its evaluation of an application for registration as an exchange (or for an exemption from exchange registration based on limited volume) or association. In addition, the information to be disclosed in these exhibits would be relevant to the Commission and to the public in their evaluation of whether the exchange or association has rules that comply with Sections 6(b)(5) and 15A(b)(6) of the Exchange Act.[377] The disclosures should also guide the Commission (and the exchange or association) in determining whether the exchange or association meets the statutory standards for initial and continued registration as a national securities exchange or registered securities association.[378]

Further, the Commission in several instances proposes to align the

[366] 15 U.S.C. 78f(b)(8) and 78*o*–3(b)(9).

[367] *See infra* Section IV.C.13.*l.* for a discussion of current Form 1 requirements regarding securities listed and traded on an exchange or association, and their facilities, which would be retained in revised Form 1 and added to new Form 2.

[368] *See* proposed Item 5 of Exhibit T to revised Form 1 and new Form 2. *See also* discussion of proposed Regulation AL in Section III.

[369] *See supra* Section III.

[370] 15 U.S.C. 78f(b)(1) and 78*o*–3(b)(2).

[371] *See* Rule 6a–2(d) under the Exchange Act, 17 CFR 240.17a–1.

[372] 15 U.S.C. 78q.

[373] Currently, this information is required by Items 29 and 30 of Form X–15AA–1.

[374] This item would be included on the execution page of new Form 2.

[375] 15 U.S.C. 78*o*–3(d).

[376] Currently, this information is required by Items 7 through 28, inclusive, of Form X–15AA–1.

[377] *See* Sections 6(b)(5) and 15A(b)(6) of the Exchange Act, 15 U.S.C. 78f(b)(5) and 78*o*–3(b)(6).

[378] *See* Sections 6(b) and 15A(b) of the Exchange Act, 15 U.S.C. 78f(b) and 78*o*–3(b).

regulatory treatment of exchanges and associations by mandating similar disclosure for both exchanges and associations. Under the current disclosure framework, exchanges are required to provide more detailed information on Form 1 than associations are required to submit on applicable registration forms. The Commission does not believe that in today's environment the registration procedures for exchanges and associations under the Exchange Act should maintain differing disclosure requirements. National securities exchanges and registered securities associations are charged with nearly identical obligations under the Exchange Act.[379] In addition, we are proposing to enhance the transparency of governance, administration, regulation, and ownership for both exchanges and associations. This is an opportune time to review all aspects of the registration procedures and forms for exchanges and associations and propose appropriate revisions. In our view, the proposed inclusion in new Form 2 of certain Exhibits currently contained in Form 1 would align more closely the regulatory disclosure framework for exchanges and associations. Moreover, the Commission believes that the incorporation of current Form 1 requirements into new Form 2 would further the statutory goal of assuring that to be registered, and remain registered, an exchange and an association must be so organized and have the capacity to comply with, and enforce compliance by members with, the provisions of the Exchange Act, the rules thereunder, and the rules of the exchange or association.[380]

a. Constitution, Articles of Incorporation, By-Laws, and Rules. Exhibit A of current Form 1 and current Form X–15AA–1 both require that exchanges and associations provide to the Commission copies of their constitution or articles of incorporation or association, with all subsequent amendments, and of their existing by-laws or corresponding rules or instruments. This disclosure item would be retained as Exhibit A of revised Form 1 and new Form 2.

b. Rulings and Interpretations. Exhibit B of current Form 1 requires exchanges to provide a copy of all written rulings, settled practices having the effect of rules, and interpretations of the board or any committee of the exchange in respect of any provisions of the constitution, by-laws, rules, or trading practices of the exchange which were not otherwise provided as part of Exhibit A. This required disclosure item would be retained in revised Form 1, and added to new Form 2, as Exhibit B.

c. Officers. Form 1 currently requires the disclosure of the officers of the exchange or association who presently hold their offices or positions, or have held them during the previous year, with identifying information that includes each officer's name, title, dates of commencement and termination of term of office, and type of business.[381] The Commission believes that mandating associations and exchanges to disclose this information should better inform market participants, investors, and regulators about exchange and association officers. Therefore, this required disclosure would be retained in revised Form 1 and added to new Form 2, as Exhibit D.

d. Financial Statements of Affiliates. Form 1 currently requires exchanges to provide to the Commission unconsolidated financial statements for each subsidiary or affiliate for the latest fiscal year.[382] Such financial statements must consist, at a minimum, of a balance sheet and an income statement with such footnotes and other disclosure as are necessary to avoid rendering the financial statements misleading.[383] We believe that the financial statements of affiliates would be relevant to the Commission and to market participants and the public generally with respect to associations, as well as exchanges. Therefore, this required disclosure would be retained in revised Form 1, and added to new Form 2, as Exhibit J.[384] The required financial statements under proposed Exhibit J would consist of, at a minimum, a balance sheet and an income statement of cash flows, with such footnotes and other disclosure as are necessary to avoid rendering the financial statements misleading. The Commission proposes to clarify that the financial statement would include an income statement of cash flows, would clarify that separate financial statements are required for each affiliate, and would delete the reference to ''subsidiary'', in each case to conform to current accounting terminology.[385]

e. General Information Relating to Affiliates and SRO Trading Facilities. Form 1 currently requires exchanges to provide to the Commission information regarding any of their affiliates, subsidiaries and any electronic trading system to be used to effect transactions on the exchange.[386] The exchange is required to disclose identifying information about the organization of each such entity, such as name, address, form of organization, and state under which it is organized. The exchange also must describe the nature and extent of any affiliation, and the nature of the business or functions performed by the affiliate, subsidiary, or electronic trading system, including responsibilities with respect to the operation of an electronic trading system. In addition, the exchange must provide to the Commission a copy of the organizational documents of each such entity, including its constitution or articles of incorporation and by-laws, as well as a list of officers, governors, and members of standing committees. Finally, the exchange must indicate if such entity ceased to be associated with the exchange during the previous year. The exchange must provide a brief statement of the reasons for termination of the association with the entity.

We believe that knowledge of identifying and organizational information with respect to affiliates and any unaffiliated entity that operates an SRO trading facility would be useful to the Commission and to the public. This would be the case with respect to associations as well as exchanges. Therefore this disclosure item would be retained in revised Form 1, and added to new Form 2, as proposed Exhibit K.[387]

f. Operation of SRO Trading Facilities. Under current Form 1 requirements, exchanges must describe the manner of operation of any electronic trading system to be used to effect transactions

[379] *See supra* note 285.

[380] *See* Sections 6(b)(1) and 15A(b)(2) of the Exchange Act, 15 U.S.C. 78g(b)(1) and 78*o*–3(b)(2).

[381] Currently, this information is required by Exhibit J to Form 1.

[382] Currently, this information is required by Exhibit D to Form 1.

[383] If any affiliate or subsidiary is required by another Commission rule to submit annual financial statements, a statement to that effect, with a citation to the other Commission rule, may be provided along with a copy of the financial statements prepared pursuant to such other Commission rule.

[384] The Commission notes that by proposing to require disclosure only of an affiliate of an exchange or association, there is no intent to propose a substantive change to the current requirement. The Commission believes that the definition of ''affiliate'' set forth in the Instructions to revised Form 1 and new Form 2 would include a ''subsidiary,'' and by proposing to eliminate the term ''subsidiary'' from proposed Exhibit J, the Commission seeks solely to clarify the requirement.

[385] *See* Regulation S–X, 17 CFR Part 210.

[386] Currently, this information is required by Exhibit C to Form 1.

[387] The Commission notes that by proposing to require disclosure only of an affiliate of an exchange or association, there is no intent to propose a substantive change to the current requirement. The Commission believes that the definition of ''affiliate'' set forth in the Instructions to revised Form 1 and new Form 2 would include a ''subsidiary,'' and by eliminating the term ''subsidiary'' from proposed Exhibit K, the Commission, seeks solely to clarify the requirement.

on the exchange.[388] The description must include the means of access, procedures governing entry and display of quotations and orders, procedures governing the execution, reporting, clearance, and settlement of transactions, proposed fees, and procedures for ensuring compliance with usage guidelines. The exchange must also disclose the hours of operation of the electronic trading system, and the date on which the exchange intends to commence operation of the electronic trading system. If the exchange proposes to hold funds or securities on a regular basis, the exchange must provide a description of the controls that will be implemented to ensure safety of those funds or securities. Finally, the exchange is required to attach a copy of the users' manual. The Commission believes that market participants, investors, and regulators would benefit from the disclosure of information about SRO trading facilities of associations, including electronic trading systems, in addition to SRO trading facilities of exchanges. This required disclosure would be retained in revised Form 1, and added to new Form 2, as proposed Exhibit L.

g. Membership Forms Form 1 currently requires exchanges to provide a complete set of all forms pertaining to application for membership, participation or subscription to the exchange, application for approval as a person associated with a member, participant, or subscriber, and any other similar materials.[389] The current Forms for associations requires the filing of a list of members, but does not require the filing with the Commission of the forms for membership. In our view, the information required to be disclosed with respect to membership would be beneficial in the context of associations, in addition to exchanges. Therefore this required disclosure item would be retained in revised Form 1, and added to new Form 2, as proposed Exhibit M.

h. Financial Responsibility and Minimum Capital Requirements of Members. Pursuant to Form 1, exchanges must provide a complete set of all forms of financial statements, reports or questionnaires required of members, participants, subscribers, or any other users relating to financial responsibility or minimum capital requirements for such members, participants, or any users.[390] We believe that the information regarding member financial responsibility and minimum capital requirements, if any, would be relevant information to be disclosed by associations as well. Therefore, this disclosure item would be retained in revised Form 1, and added to new Form 2, as proposed Exhibit N.

i. Listing Applications. Form 1 currently requires exchanges to provide the Commission with a complete set of documents comprising its listing applications, including any agreements required to be executed in connection with listing, and a schedule of listing fees.[391] If the exchange does not list securities, the exchange must provide a brief description of the criteria used to determine what securities may be traded on the exchange. The Commission believes that information about listing and trading of securities on facilities of an association also would be useful to the Commission and to the public generally. In this way, the Commission and the public would have access to the current listing applications used by issuers, along with other materials related to the listing of securities. We therefore propose to retain the required disclosure in revised Form 1, and add it to new Form 2, as proposed Exhibit O.

j. Criteria for Membership. Form 1 currently requires exchanges to provide a description of the criteria for membership, the conditions under which members may be subject to suspension or termination with regard to access to the exchange, and any procedures that will be involved in the suspension or termination of a member.[392] In contrast, Form X–15AA–1 simply requires associations to state which of its rules deal with admissions to membership, restrictions on membership, and appeals procedures for brokers or dealers that have been denied membership.[393] The Commission believes that the information about membership criteria is relevant to the Commission and to the public generally as a means to be informed about membership eligibility requirements and the conditions under which those members can have their access to the SRO's facilities suspended or terminated. We propose that this required disclosure, in the format required by current Form 1, be retained in revised Form 1, and added to new Form 2, as proposed Exhibit R.

k. List of Members. Form 1 currently requires exchanges to provide a list of all members, participants, subscribers or other users.[394] Exchanges must also note the name of the entity with which an individual is associated and relationship to the entity, the type of activities primarily engaged [395] in by the member, participant, subscriber, or other user (*e.g.*, floor broker, specialist, odd lot dealer, other market maker, proprietary trade, non-broker dealer, inactive or other functions), and the class of membership, participation or subscription or other access. Form X–15AA–1 simply requires associations to provide a list of all of its members and the principal place of business for each of them.[396] The Commission believes that the broader Form 1 disclosure requirements should be applied to associations, as well, including information about members, participants, subscribers or other users of association facilities, if any. Thus, we propose that this disclosure be retained in revised Form 1, and added to new Form 2, as proposed Exhibit S.

l. Securities Listed and Traded. Under current Form 1 requirements, exchanges must provide a schedule of listed securities (including name of issuer and description of the security); securities admitted to unlisted trading privileges (including name of issuer and description of the security); securities admitted to trading on the exchange which are exempt from registration under Section 12(a) of the Exchange Act [397] (including the name of the issuer, a description of the security, and the statutory exemption claimed); and other securities traded on the exchange (including name of issuer and description of the security).[398] The Commission believes that information with respect to securities listed and traded on the facilities of an association, if any, would be helpful to the Commission and to market participants in ascertaining the securities that are listed and traded on an SRO's facilities. We therefore propose that this required disclosure be retained in revised Form

[388] Currently, this information is required by Exhibit E to Form 1.

[389] Currently, this information is required by Exhibit F to Form 1.

[390] Currently, this information is required by Exhibit G to Form 1. The exchange also must provide a table of contents of the forms included in the exhibit.

[391] Currently, this information is required by Exhibit H to Form 1.

[392] Currently, this information is required by Exhibit L to Form 1.

[393] *See* Form X–15AA–1.

[394] Currently, this information is required by Exhibit M to Form 1.

[395] Current Exhibit M to Form 1 states that a person shall be ''primarily engaged'' in an activity or function when that activity or function is the one in which that person is engaged for the majority of their time.

[396] Currently, this information is required by Exhibit C to Form X–15AA–1.

[397] 15 U.S.C. 78 *l*.

[398] Currently, this information is required by Exhibit N to Form 1.

1, and added to new Form 2, as Exhibit T.

D. Timing and Format of Revised Form 1 and New Form 2

In conjunction with its proposals to revise Form 1 and adopt new Form 2, the Commission also proposes to revise the rules governing the timing and format of the required disclosures by exchanges and associations. Currently, Rule 6a–2(a) under the Exchange Act [399] requires a national securities exchange, or an exchange exempted from such registration based on limited volume, to file with the Commission an amendment to its Form 1 within 10 days after any action is taken that renders inaccurate, or that causes to be incomplete: (1) Information filed on the Execution Page of Form 1 (or any amendment thereto); or (2) information filed as part of certain exhibits [400] to Form 1. In addition, Rule 6a–2(b) under the Exchange Act [401] requires an exchange to file an annual amendment to its Form 1 to update certain exhibits,[402] while Rule 6a–2(c) under the Exchange Act [403] requires an exchange to file an amendment to its Form 1 every three years to update certain other exhibits.[404] Finally, Rule 6a–2 provides exchanges with several alternatives that they may utilize in lieu of the annual filing requirement for Exhibits K, M, and N and the three-year filing requirement for Exhibits A, B, C, and J.[405] In lieu of paper filing of Exhibits A, B, C, J, K, M, and N, exchanges have the following options (''paper filing alternatives''):

(1) If the exchange publishes, or cooperates in the publication of the information required by these exhibits, on an annual or more frequent basis, the exchange may identify the publication in which such information is available, the name, address, and telephone number of the person from whom such publication may be obtained, and the price of such publication, so long as it certifies to the accuracy of the information as of its publication date;

(2) If the exchange keeps the information required by these exhibits up-to-date, and makes it available to the Commission and the public upon request, the exchange may certify that the information is kept up-to-date and available to the Commission and public upon request; or

(3) If the information required by these exhibits is available continuously on an Internet Web site controlled by the exchange, the exchange may indicate the location where such information may be found and certify that the information available at such location is accurate as of its date.[406]

Rule 15Aj–1 under the Exchange Act [407] is the companion rule for a registered securities association or an affiliated securities association and contains filing requirements similar to the provisions of Rule 6a–2. Rule 15Aj–1 currently requires an association to update its Form X–15AA–1 [408] promptly after the discovery of any inaccuracy in the registration statement or in any amendment or supplement thereto.[409] Rule 15Aj–1 also requires an association to file a current supplement on Form X–15AJ–1 [410] following any change which renders the information contained or incorporated in the registration statement or any amendment thereto no longer accurate.[411] In addition, an association is required to file a consolidated supplement to its registration statement on Form X–15AJ–2 [412] annually and a complete Exhibit A of the Form X–15AJ–2 every three years.[413] Finally, an association must file with the Commission a supplement setting forth its balance sheet following the close of each fiscal year.[414] As is the case for exchanges under Rule 6a–2, with respect to certain filings required under current Rule 15Aj–1, an association may, in lieu of filing in paper form, identify the publication in which such information is available, the name, address, and telephone number of the person from whom such information may be obtained, and the price of the publication, as long as it certifies that the information is accurate.[415]

For clarity, the Commission proposes to redesignate Rule 15Aj–1 as Rule 15Aa–2 so that it will be located with Rule 15Aa–1, the rule for registration as a registered securities association or affiliated securities association. The Commission also proposes to revise Rule 6a–2 and the redesignated Rule 15Aa–2 to enhance the frequency of disclosures by exchanges and associations, to harmonize filing and format requirements for exchanges and associations, and to streamline the disclosure process.[416]

The proposed amendments to Rule 6a–2 would require a national securities exchange or an exchange exempted from such registration based on limited volume, to file an amendment to revise its Form 1 within 10 calendar days after any material event takes place that renders inaccurate, or that causes to be incomplete:

(i) Any information filed on the Execution Page of revised Form 1, or an amendment thereto;

(ii) Any information filed as part of proposed Exhibits C (board), D (officers), E (executive board and committees), H (regulatory program), I (financial statements and information), J (financial information about subsidiaries and affiliates), K (general information about subsidiaries, affiliates, and SRO trading facilities), M (membership forms), N (financial responsibility requirements), O (listing applications), P (relationship among the exchange or association, any facility of the exchange or association, and any affiliate of either), S (list of members and participants), or U (location of books and records), and as part of Item 3 of Exhibit F (waivers of code of conduct and ethics) or Items 1, 5, 6 and 7 of Exhibit Q (certain information about ownership in a Disclosure Entity) to revised Form 1, or any amendments thereto; or

(iii) Any information filed as part of Items 2 and 3 of proposed Exhibit Q, or any amendment thereto, except that such information would not be required to be filed with respect to any ownership change that is less than 1% from the ownership interest last reported on Form 1, or any amendment thereto.[417]

[399] 17 CFR 240.6a–2(a).

[400] Currently, these exhibits are Exhibits C, F, G, H, J, K and M to Form 1. *See supra* note 289 for a brief description of the subject matter of the exhibits to current Form 1.

[401] 17 CFR 240.6a–2(b).

[402] Currently, these exhibits are Exhibits D, I, K, M, and N to Form 1. *See supra* note 289 for a brief description of the subject matter of the exhibits to current Form 1.

[403] 17 CFR 240.6a–2(c).

[404] Currently, these exhibits are Exhibits A, B, C, and J to Form 1. *See supra* note 289 for a brief description of the subject matter of the exhibits to current Form 1.

[405] *See supra* note 289 for a description of the information required by Exhibits A, B, C, J, K, M, and N.

[406] 17 CFR 240.6a–2(d).

[407] 17 CFR 240.15Aj–1.

[408] 17 CFR 249.801. Rule 15Aa–1 under the Exchange Act requires the initial filing of the Form X–15AA–1 for registration as a registered securities association or an affiliated securities association. *See* 17 CFR 240.15Aa–1.

[409] 17 CFR 240.15Aj–1(a).

[410] 17 CFR 259.802.

[411] 17 CFR 240.15Aj–1(b).

[412] 17 CFR 259.803.

[413] 17 240.15Aj–1(c)(i)–(ii).

[414] 17 CFR 240.15Aj–1(c)(2).

[415] 17 CFR 240.15Aj–1(c)(1)(i)–(ii). This alternative to paper filing is available for annual supplements and the filing of a complete Exhibit A to current Form X–15AJ–2, which is required every three years.

[416] Whereas proposed Rule 6a–2 resembles the current Rule 6a–2, proposed redesignated Rule 15Aa–2 would completely replace the text of the current Rule 15Aj–1 as a result of an effort to conform Rule 15Aa–2 more closely to Rule 6a–2 and thereby harmonize the procedural and timing requirements for the filing of the revised Form 1 and new Form 2 and any amendments.

[417] *See* proposed Rule 6a–2(a).

The Commission is proposing to retain the 10-day filing deadline requirement from the current Form 1, because the Commission believes that 10 days is a sufficient time period in which to file a Form 1 amendment.

The proposed amendments to redesignated Rule 15Aa–2 similarly would require a registered securities association or an affiliated securities association to file an amendment to revise new Form 2 [418] within 10 calendar days after any material event takes place that renders inaccurate, or that causes to be incomplete: (i) Any information filed on the Execution Page of new Form 2, or an amendment thereto; (ii) any information filed as part of proposed Exhibits C (board), D (officers), E (executive board and committees), H (regulatory program), I (financial statements and information), J (financial information about subsidiaries and affiliates), K (general information about subsidiaries, affiliates, and SRO trading facilities), M (membership forms), N (financial responsibility requirements), O (listing applications), P (relationship among the exchange or association, any facility of the exchange or association, and any affiliates of either), S (list of members and participants), or U (location of books and records), and as part of Item 3 of Exhibit F (waivers of code of conduct and ethics) or Items 1, 5, 6 and 7 of Exhibit Q (certain information about ownership in a Disclosure Entity) to the new Form 2, or any amendment thereto; or (iii) any information filed as part of Items 2 and 3 of proposed Exhibit Q, or any amendment thereto, except that such information would not be required to be filed with respect to any ownership change that is less than 1% from the ownership interest last reported on Form 1 or Form 2, or any amendment thereto.[419]

The 10-day filing deadline requirement for filing an amendment to revised Form 1 is based on the current Form 1 filing deadline. The Commission believes that the filing requirements for exchanges and association should be uniform. As with the requirement for exchanges, the Commission believes that 10 days is a sufficient time period in which to file a Form 2 amendment.

Under proposed Rules 6a–2(b) and 15Aa–2(b), an exchange or association would be required to file an annual amendment to update the proposed revised Form 1 or new Form 2, as applicable, in its entirety, within 60 days of the end of its fiscal year. With respect to this annual amendment, the information would be required to be up-to-date as of the end of the latest fiscal year of the exchange or association.[420] The Commission believes that a 60-day filing deadline would give exchanges and associations sufficient time in which to file an annual amendment to Forms 1 and 2, while at the same time rendering the information contained in the annual amendment still timely and relevant.

The Commission believes that the proposed amendments to Rules 6a–2 and 15Aa–2 would enhance investor confidence in the integrity of the markets by requiring exchanges and associations to provide more consistent and up-to-date disclosures about significant changes in their governance, administration, regulatory programs, and ownership. Furthermore, by standardizing the requirements for exchanges and associations and by replacing the current forms for associations with new Form 2, the Commission believes the proposed rules should simplify and streamline the disclosure process and provide more uniform treatment for exchanges and associations. The Commission does not believe that the registration procedures for exchanges and associations under the Exchange Act should maintain differing disclosure requirements, as national securities exchanges and registered securities associations are charged with nearly identical obligations under the Exchange Act.[421]

The Commission also is proposing changes to the current requirements with respect to the format in which registration applications and their amendments are submitted, with the aim of making such information more readily accessible to both the Commission and the public. Currently, exchanges and associations submit their registration forms and amendments to the Commission, through its Division of Market Regulation, in paper format. As noted above, there are paper filing alternatives to the filing of exhibits to existing Form 1 and Forms X–15AJ–1 and X–15AJ–2.

Under proposed Rules 6a–2(c) and 15Aa–2(c), a national securities exchange, an exchange exempted from such registration based on limited volume, a registered securities association, or an affiliated securities association would be required to file the initial proposed revised Form 1 or new Form 2, and all subsequent amendments thereto (with a few exceptions),[422] in paper format with the Commission.[423] However, in addition to the paper filing, the Commission also proposes to require that each exchange and association continuously post its most recent annually amended registration form and any subsequent updating amendments on a publicly accessible Web site controlled by the exchange or association. In the Commission's view, a publicly accessible Internet Web site is one that does not require a password in order to access information contained in Form 1 or Form 2.

In addition, Rules 6a–2(c) and 15Aa–2(c) would require the exchange or association to indicate, in any amendments filed with the Commission, the location of the Internet Web site where the most recent Form 1 or Form 2 and any subsequent updating amendments may be found, and to certify that the information available at such location is accurate as of its date. The Commission believes that posting the most recent version of Form 1 or Form 2 on an Internet Web site would significantly increase transparency with regard to each exchange and association, and would assist the Commission, market participants, and the public in their understanding and awareness of significant aspects of these SROs.

Finally, the Commission proposes to add to Rules 6a–2 and 15Aa–2 a process for the Commission, upon written application or its own motion, to grant an exemption from the Form 1 or Form 2 filing requirements, either unconditionally or on specified terms and conditions, if the Commission determines that such exemption is necessary or appropriate in the public interest and is consistent with the protection of investors.[424] Currently,

[418] As part of the Commission's effort to simplify and streamline the disclosure process for registered securities associations and affiliated securities associations, new Form 2 would be used for all applications and amendments and would replace current Forms X–15AA–1, X–15AJ–1 and X–15AJ–2. *See supra* Section IV.F.

[419] *See* proposed Rule 15Aa–2(a).

[420] *See* proposed Rules 6a–2(b) and 15Aa–2(b).

[421] *See supra* Section I.A.

[422] The proposed rules provide an exception to the paper filing requirement for annual amendments to proposed Exhibits A, B, M, N, S, and T to revised Form 1 and new Form 2, and Items 1–7 of proposed Exhibit L to revised Form 1 and new Form 2. With respect to these Exhibits, an exchange or association, in lieu of filing such information in paper format, would only be required to identify the Internet web site it controls where such information is available continuously and to certify to the accuracy of such information as of its date. *See* proposed Rules 6a–2(d) and 15Aa–2(d).

[423] The Commission is not proposing at this time to require that exchanges and associations file revised Form 1 and new Form 2 electronically. In the future, the Commission may consider the feasibility of requiring electronic filing of revised Form 1 and new Form 2. *See, e.g.*, Securities Exchange Act Release No. 50486 (October 4, 2004), 69 FR 60287 (October 8, 2004) (adopting rules requiring SRO proposed rule changes under Section 19(b) of the Exchange Act, 15 U.S.C. 78s(b), to be filed electronically with the Commission).

[424] *See* proposed Rules 6a–2(e) and 15Aa–2(e).

Rule 6a–2 contains a provision providing procedures for the Commission, upon certain conditions, to exempt an exchange from filing an amendment required by the rule for any affiliate or subsidiary listed in Exhibit C to current Form 1. The Commission, however, proposes to include procedures for broader exemptive relief under Rules 6a–2 and 15Aa–2, particularly in light of the additional disclosure requirements that are proposed.

E. Proposed Changes to Rule 15Aa–1

Rule 15Aa–1 under the Exchange Act requires that an application for registration as a registered or an affiliated securities association shall be made on Form X–15AA–1.[425] Because the Commission is proposing to revise Form X–15AA–1 and redesignate it as new Form 2, the Commission is also proposing corresponding changes to Rule 15Aa–1. The amendment to Rule 15Aa–1 would clarify that an application for registration as a registered or an affiliated securities association shall be made on new Form 2.

F. Proposed Repeal of Forms X–15AJ–1 and X–15AJ–2

Currently, a registered securities association is required to file amendments or supplements to correct any statement that the association discovers is inaccurate or that is no longer accurate on Form X–15AJ–1.[426] An association also is required to file an annual consolidated supplement to its registration statement, and an amendment every three years with the Commission on Form X–15AJ–2.[427] Under the proposals, a registered securities association would be required to file all amendments to its registration application on new Form 2, rather than on Forms X–15AJ–1 or X–15AJ–2. Therefore, the Commission is proposing to repeal Forms X–15AJ–1 and X–15AJ–2. The Commission believes that the repeal of these forms should make the process of registration as a registered securities association or affiliated securities association, as well as the process of filing amendments to new Form 2, more efficient to the extent that associations could use one form for both purposes.

G. Request for Comment

The Commission seeks comments on the proposed changes to the forms for registration as a national securities exchange (or exemption from registration as a limited volume exchange) and as a registered securities association (or affiliated securities association), in addition to the companion rules governing the filing of the registration forms and amendments to those forms, as described above. In addition, the Commission requests that interested persons respond to the following specific questions:

Question 76. Are the requested disclosure items contained in revised Form 1 and new Form 2 appropriate? Are there other disclosure items that should be added or are there proposed items that should be deleted?

Question 77. Is the proposed definition of ''control'' in the proposed Instructions to revised Form 1 and new Form 2 appropriate?

Question 78. Is the proposed definition of ''disclosure entity'' in the proposed Instructions to revised Form 1 and new Form 2 appropriate?

Question 79. Is the proposed definition of ''immediate family member'' in the proposed Instructions to revised Form 1 and new Form 2 appropriate?

Question 80. Is the proposed definition of ''regulatory subsidiary'' in the proposed Instructions to revised Form 1 and new Form 2 appropriate?

Question 81. Is the proposed definition of ''SRO trading facility'' in the proposed Instructions to revised Form 1 and new Form 2 appropriate?

Question 82. Currently, national securities exchanges are required to provide more detailed disclosure to the Commission than are registered securities associations. The Commission's proposal aims to harmonize the filing requirements for exchanges and associations. Should registered securities associations be required to disclose the same items as national securities exchanges? Are any of the proposed disclosure items unnecessary for registered securities associations? Are there items that have not been proposed that should be added for registered securities associations? Is there any other information currently required by Form X–15AA–1 that should be retained in new Form 2?

Question 83. Are there features of the proposed disclosure requirements that should be applied to other SROs, such as registered clearing agencies and the Municipal Securities Rulemaking Board?

Question 84. Are the disclosure items contained in proposed Exhibit A (constitution, bylaws, rules) to revised Form 1 and new Form 2 appropriate? Are there other disclosure items that should be added or are there proposed items that should be deleted?

Question 85. Are the disclosure items contained in proposed Exhibit B (written rulings and interpretations) to revised Form 1 and new Form 2 appropriate? Are there other disclosure items that should be added or are there proposed items that should be deleted?

Question 86. Are the disclosure items contained in proposed Exhibit C (board) to revised Form 1 and new Form 2 appropriate? Are there other disclosure items that should be added or are there proposed items that should be deleted? Is it useful to require the disclosure of information relating to affiliations or relationships that reasonably could affect the director's independent judgment or decision-making for all directors?

Question 87. Are the disclosure items contained in proposed Exhibit D (officers) to revised Form 1 and new Form 2 appropriate? Are there other disclosure items that should be added or are there proposed items that should be deleted?

Question 88. Are the disclosure items contained in proposed Exhibit E (executive board and committees) to revised Form 1 and new Form 2 appropriate? Are there other disclosure items that should be added or are there proposed items that should be deleted? Is it useful to require disclosure of information relating to affiliations or relationships that reasonably could affect each executive board or committee member's independent judgment or decision-making? Is it useful to require the filing of the charters of each Standing Committee?

Question 89. Are the disclosure items contained in proposed Exhibit F (governance guidelines and codes of conduct) to revised Form 1 and new Form 2 appropriate? Are there other disclosure items that should be added or are there proposed items that should be deleted? Is it useful to require the disclosure of governance guidelines and codes of conduct and any waiver of the code of conduct?

Question 90. Are the disclosure items contained in proposed Exhibit G (organization charts) to revised Form 1 and new Form 2 appropriate? Would the organization charts be helpful? Should the Commission require a minimum level of detail that exchanges and associations should provide in the charts? Are there other disclosure items that should be added to this Exhibit?

Question 91. Are the disclosure items contained in proposed Exhibit H (regulatory program) to revised Form 1 and new Form 2 appropriate? Are there other disclosure items that should be

[425] 17 CFR 240.15Aa–1.

[426] 17 CFR 259.802. *See* Rule 15Aj–1(a) and (b), 17 CFR 240.15Aj–1(a) and (b).

[427] 17 CFR 259.803. *See* Rule 15Aj–1(c), 17 CFR 240.15Aj–1(c).

added or are there proposed items that should be deleted? Is it useful for SROs to disclose information about their regulatory programs, including the independence of the regulatory program from market operations and other commercial interests, any significant planned changes, and any significant issues and events and their effect on the regulatory program? Should SROs be required to submit copies of their delegations plans or other agreements pertaining to regulatory services provided by another SRO or its regulatory subsidiary, or the regulatory subsidiary of the applicant?

Question 92. Are the categories of financial disclosures contained in proposed Exhibit I (regulatory program financial and other information) appropriate? Are there any categories that need to be clarified, added, or deleted?

Question 93. Are the items in proposed Exhibit I pertaining to percentage of total budget and percentage of total revenues devoted to regulatory activities appropriate? Are there other items that should be included?

Question 94. Are the categories of revenues and expenditures and allocated costs in proposed Exhibit I that must be disclosed with respect to the regulatory program appropriate? Are there specific categories that should be added, deleted, or clarified? Do the specified items capture sufficiently the categories of revenue and expenses that exchanges and associations currently utilize? Would it be easy or difficult for SROs to provide the requested information?

Question 95. Should disclosure of a discussion of unusual events or significant economic changes that have had a material effect on the SRO's financial condition be required?

Question 96. Should disclosure of significant business developments involving the SRO be required?

Question 97. Should disclosure of material contracts and material related party transactions be required? Is the $60,000 threshold amount for material contracts and related party transactions, as set forth in proposed Exhibit I, appropriate? Should the threshold amount be set higher or lower?

Question 98. Should disclosure of material commitments for expenditures as of the end of the latest fiscal period and the purpose of those commitments and their anticipated source of funds be required?

Question 99. Should disclosure of charitable contributions in excess of $1,000, whether made directly or indirectly, under specified circumstances be required? Should the disclosure threshold be $1,000 or a higher or lower amount? Should all charitable contributions be disclosed? Are there other kinds of contributions that should be disclosed?

Question 100. Should disclosure of a table detailing the compensation of the five most highly compensated executives of the exchange or association, using Item 402(b) of Regulation S–K, be required?

Question 101. Should proposed Exhibit I require the disclosure of an annual report of the exchange's or association's Audit Committee?

Question 102. Are the disclosure items contained in proposed Exhibit J (subsidiary financial statements) to revised Form 1 and new Form 2 appropriate? Are there other disclosure items that should be added or are there proposed items that should be deleted?

Question 103. Are the disclosure items contained in proposed Exhibit K (SRO trading facility) to revised Form 1 and new Form 2 appropriate? Are there other disclosure items that should be added or are there proposed items that should be deleted?

Question 104. Are the disclosure items contained in proposed Exhibit L (SRO trading facility) to revised Form 1 and new Form 2 appropriate? Are there other disclosure items that should be added or are there proposed items that should be deleted?

Question 105. Are the disclosure items contained in proposed Exhibit M (membership forms) to revised Form 1 and new Form 2 appropriate? Are there other disclosure items that should be added or are there proposed items that should be deleted?

Question 106. Are the disclosure items contained in proposed Exhibit N (members' financial forms) to revised Form 1 and new Form 2 appropriate? Are there other disclosure items that should be added or are there proposed items that should be deleted?

Question 107. Are the disclosure items contained in proposed Exhibit O (listing forms) to revised Form 1 and new Form 2 appropriate? Are there other disclosure items that should be added or are there proposed items that should be deleted?

Question 108. Is the information proposed to be required in proposed Exhibit P (organizational charts) relating to the relationship between an exchange, an association, a facility of an exchange or association, and their respective affiliates, and whether and how the facility or affiliate has the power to influence or control the management, policies and regulatory responsibilities of the exchange or association, appropriate? Should the Commission require the exchange or association to provide any other information?

Question 109. Are the disclosure requirements contained in proposed Exhibit Q (ownership of an exchange or association or facility of an exchange or association) appropriate? Should the Commission require an exchange or association to disclose any additional information relating to such ownership?

Question 110. Should the Commission require the exchange or association to disclose direct and indirect ownership in any entity other than the exchange, association, or a facility of the exchange or association? If so, what other category of entity?

Question 111. In relation to the proposed ownership disclosure in proposed Exhibit Q, is the proposed definition of ''related persons'' appropriate? Should it be broader? Narrower?

Question 112. Will the exchange or association be able to obtain the information necessary to determine whether any person, alone or together with its related persons, exceeds the 5% reporting threshold? The Commission has proposed to require an exchange or association to have rules that would provide a mechanism for the exchange or association to obtain information from its owners or the owners of its facility regarding such ownership. Would this help? How difficult would it be for an exchange or association to implement such rules for owners that are not members, such as by amending its certificate of incorporation? Alternatively, should the Commission require an exchange or association to disclose ownership information only to the extent it is reasonably available to them, if they have made reasonable efforts to obtain such information and were unable to do so?

Question 113. Are the disclosure items contained in proposed Exhibit R (membership criteria) to revised Form 1 and new Form 2 appropriate? Are there other disclosure items that should be added or are there proposed items that should be deleted?

Question 114. Are the disclosure items contained in proposed Exhibit S (list of members) to revised Form 1 and new Form 2 appropriate? Are there other disclosure items that should be added or are there proposed items that should be deleted?

Question 115. Are the disclosure items contained in proposed Exhibit T (schedule of securities listed or admitted to trading) to revised Form 1 and new Form 2 appropriate? Are there other disclosure items that should be

added or are there proposed items that should be deleted?

Question 116. Is the requested disclosure item contained in proposed Exhibit U (location of books and records) of revised Form 1 and new Form 2 appropriate?

Question 117. Is the proposed change to Rule 17a–1 to require, for the existing five-year record retention period, an exchange or association (and other SROs) to maintain its books and records in the United States appropriate?

Question 118. In proposed Exhibit J to revised Form 1 and new Form 2, exchanges and associations would be required to provide separate annual financial statements for each affiliate. In proposed Exhibit K, exchanges and associations would be required to provide specified organizational information concerning each affiliate and for any unaffiliated entity that operates an SRO trading facility, including copies of organizational documents and lists of officers, governors, and Standing Committee members. Substantively, these requirements mirror those currently applicable to exchanges in Exhibits C and D of current Form 1. Given the trend toward SRO demutualization, and the prospect that an SRO could become part of a large conglomerate, should the SRO affiliates with respect to which information is required in proposed Exhibits J and K be narrowed (*e.g.* to those affiliates that are in the chain of control with the exchange or association, or to affiliates that are in the securities business)? If so, what specific information should be excluded with respect to these affiliates (*e.g.*, separate financial statements, copies of organizational documents)?

Question 119. Should the disclosure requirement contained in current Exhibit B to Form X–15AA–1 be retained in new Form 2 appropriate? Are there other disclosure items from Form X–15Aa–1 that should be added to revised Form 1?

Question 120. Are the revisions to proposed Rules 6a–2 and 15Aj–1 (to be redesignated as Rule 15Aa–2) appropriate? Is the 10-day filing deadline for periodic updates appropriate? Is it too long? Is it too short? Is the 60-day filing deadline for annual updates appropriate? Is it too long? Is it too short?

Question 121. The Commission has proposed to permit exchanges and associations, in complying with the requirement of filing amendments to revised Form 1 and new Form 2, to make proposed Exhibits A, B, M, N, S, or T or Items 1–7 of proposed Exhibit L available continuously on a Web site controlled by the exchange or association, instead of filing the information in the Exhibits in paper form. Should this Web site posting alternative be available for the filing other proposed Exhibits to revised Form 1 and new Form 2?

Question 122. Should there be more alternatives to paper filing, *e.g.*, simply relying on posting on the exchange's or association's Internet website?

Question 123. Should revised Form 1 and new Form 2 be integrated into a single form to be used both exchanges and associations?

Question 124. Should the Commission consider electronic filing of revised Form 1 and new Form 2, such as on EDGAR?

V. Periodic Reporting Obligations of Exchanges and Associations

A. Background and Need for Proposed Rule 17a–26

A critical component of the self-regulatory system is the Commission's authority to inspect and examine each SRO to ascertain whether it is properly complying with and enforcing federal statutory and regulatory provisions, as well as the SRO's own rules.[428] Among the mechanisms utilized by the Commission in its oversight efforts are cyclical inspections of SROs that concentrate on particular facets of their regulatory programs and targeted inspections of SROs that are conducted in response to particular developments. The periodic nature of the Commission's inspections of SROs, coupled with the inherent limitations on the Commission's ability to detect violations in a system based on self-regulation, creates a risk that the Commission could be unaware that an exchange or association may not be responding promptly and adequately to new regulatory issues, or may not be fully and promptly addressing the findings and recommendations of the Commission's staff's prior inspection. In addition, an issue uncovered during the course of an inspection of an exchange or association can foreshadow similar issues across several SROs in a particular regulatory program area. The Commission believes that its ability to identify such system-wide issues, given the time necessary for its staff to prepare for and conduct on-site inspections of one or more SROs, could be enhanced by its receiving regulatory program information from the SROs on a regular basis.

Accordingly, the Commission proposes to adopt new Rule 17a–26 under the Exchange Act to establish a system of quarterly and annual reporting by national securities exchanges and registered securities associations with respect to key aspects of their regulatory programs. Along with the proposals to strengthen the public disclosure requirements applicable to exchanges and associations,[429] proposed Rule 17a–26 is intended to enhance the Commission's ability to monitor exchanges' and associations' compliance with their regulatory responsibilities.

The proposed rule would elicit specific information about exchanges' and associations' regulatory programs, including their surveillance and disciplinary operations. By requiring exchanges and associations to file with the Commission the information specified in proposed Rule 17a–26 on a periodic basis, the Commission believes that it should be able to better target its on-site inspection resources and monitor more closely SROs' responses to critical issues affecting the securities markets, particularly during the period between Commission inspections of the exchange or association. Additionally, proposed Rule 17a–26 should assist the Commission in its efforts to stay abreast of new developments and challenges affecting SROs' self-regulatory obligations and to monitor SROs' performance of their statutory obligation to comply with, and enforce compliance with, the federal securities laws and the rules and regulations thereunder, in addition to the SROs' own rules. We believe that the information to be provided by SROs would be valuable to the Commission because it would highlight potential problem areas and, in turn, could aid the Commission in crafting an appropriate response. Accordingly, the information filed pursuant to the proposed rule could enhance the Commission's ability to oversee the SROs, their members, and the entities under their jurisdiction.

Furthermore, proposed Rule 17a–26 should improve compliance practices by SROs. In particular, the proposed rule

[428] The Commission has the authority to require exchanges and associations to make, keep, and file with the Commission any records, and make and disseminate any reports, that the Commission, by rule, prescribes as necessary or appropriate in the public interest, for the protection of investors, or otherwise in furtherance of the purposes of the Exchange Act. *See* Section 17(a)(1) of the Exchange Act, 15 U.S.C. 78q(a)(1).

In addition, all records of exchanges and associations are subject to such reasonable, periodic, special, or other examinations by representatives of the Commission as the Commission deems necessary or appropriate in the public interest, for the protection of investors, or otherwise in furtherance of the purposes of the Exchange Act. *See* Section 17(b)(1) of the Exchange Act, 15 U.S.C. 78q(b)(1).

[429] *See supra* Section IV.

would compel exchanges and associations to review, on a quarterly and annual basis, the operation and performance of their regulatory programs. In gathering the necessary information and preparing the required reports under the proposed rule, exchanges and associations would have the opportunity to review and assess the information that they compile and file with the Commission. The preparation of the reports required by proposed Rule 17a–26 should be particularly useful to the SRO's proposed Chief Regulatory Officer and the members of its proposed Regulatory Oversight Committee to inform them about the operations of the SRO's regulatory program. The reporting requirements should help exchanges and associations to identify potential weaknesses in their compliance practices and surveillance programs, and help facilitate their ability to quickly revise and, as necessary, strengthen their regulatory programs. Finally, by helping to bolster the effectiveness of self-regulation, proposed Rule 17a–26 should benefit not only the SROs and their members, but also users of their facilities and other market participants, as well as the investing public.

B. Scope and Timing of Reports Required by Proposed Rule 17a–26

Proposed Rule 17a–26 would require every exchange and association subject to the proposed rule [430] to file quarterly and annual reports with the Commission that contain specified information about their regulatory programs.[431] The information required by the proposed rule would concern the regulatory programs of an exchange or association (which would include any regulatory subsidiary)[432] and would encompass any surveillance, examination, and disciplinary programs. In the event that an exchange or association has entered into a contractual relationship with another SRO pursuant to which that SRO provides regulatory services to or on behalf of the exchange or association, the information required by the proposed rule also would need to account for the regulatory services provided on behalf of the exchange or association.

1. Quarterly Reports

Every national securities exchange and registered securities association subject to the proposed rule would be required to file with the Commission the reports specified in paragraph (b)(2) of proposed Rule 17a–26 on a quarterly basis, within 20 business days after the end of each calendar quarter.[433] The Commission believes that the requirement to file the quarterly reports within 20 business days after a quarter's end would accommodate the Commission's interest in receiving the reports as promptly as possible, while granting an exchange or association a sufficient amount of time to prepare and finalize the reports containing the information that it compiles during the course of the quarter. The scope of the information proposed to be required in the quarterly reports is discussed below.[434]

2. Annual Reports

Under proposed Rule 17a–26, every national securities exchange and registered securities association subject to the proposed rule also would be required to prepare an annual report covering the following categories of information: (1) An aggregated year-end cumulative summary of the information specified in the first seven items of the quarterly report provisions of the proposed rule,[435] (2) additional information on the SRO's regulatory program that is not required to be set forth in the quarterly reports, and (3) the annual report of an independent third party designed to assess whether the operations of any electronic SRO trading facility of the exchange or association comply with the rules governing such facility.[436] Together, these three categories, discussed below, would compose the annual report.[437] The proposed rule would specify that the annual report would have to be filed with the Commission within 60 calendar days after the calendar year end.[438] The Commission believes that the proposed requirement to file the annual report within 60 calendar days after the year's end satisfies the Commission's interest in receiving the reports as promptly as possible, while granting an exchange or association a sufficient amount of time to prepare the report. The scope of the information proposed to be required in the annual report in addition to the aggregated quarterly information is discussed below.[439]

C. Format of Reports

Proposed Rule 17a–26 would require all quarterly and annual reports, as well as all audits of electronic SRO trading facilities,[440] to be submitted electronically in a uniform, readily-accessible, and useable format.[441] To that end, the proposed rule would require every exchange and association subject to the proposed rule to establish procedures for the preparation of the quarterly and annual reports in a uniform, readily accessible, and usable electronic format, as well as to review those procedures from time to time to evaluate their efficacy, and to revise the procedures as necessary.[442] The reports should be in a user-friendly format, with an emphasis on readable layouts, ability to manipulate and search the data (including cutting, pasting, and exporting text), and a common,

[430] Proposed Rule 17a–26 would not apply to a national securities exchange registered pursuant to Section 6(g)(1) of the Exchange Act, 15 U.S.C. 78f(g)(1), or to a national securities association registered pursuant to Section 15A(k)(1) of the Exchange Act, 15 U.S.C. 78o–3(k)(1). Because the Commission does not have primary responsibility for the regulation of entities under those provisions, including security futures product exchanges and limited purpose national securities associations, the Commission is proposing to exempt such exchanges and associations from Rule 17a–26. *See supra* note 77 (discussing the division of regulatory responsibility between the Commission and the CFTC).

[431] *See* proposed Rule 17a–26(a)(1) (regarding quarterly and annual reports) and (d) (regarding interim changes). Although proposed Rule 17a–26 would not expressly require exchanges or associations to maintain the records necessary to prepare the required reports, Rule 17a–1 under the Exchange Act, 17 CFR. 240–17a–1, would do so. Rule 17a–1(b) requires every exchange and association, among others, to keep and preserve all documents made or received by it in the course of its business for a period of not less than five years, the first two in an easily accessible place, subject to the destruction and disposition provisions of Rule 17a–6 under the Exchange Act, 17 CFR 240.17a–6.

[432] *See* proposed Rule 17a–26(j)(5) for a definition of the term ''regulatory subsidiary.''

[433] *See* proposed Rule 17a–26(a)(1).

[434] *See infra* Section V.D.

[435] *See* proposed Rule 17a–26(b)(2)(i)–(vii). Given the proposed electronic nature of the quarterly reports, the Commission would expect that it would be a relatively simple task for an SRO to aggregate the quarterly information and incorporate the data into the annual report. The Commission believes that the aggregation of this material in the annual report would facilitate its review by the SRO's management and governing board, including the Chief Regulatory Officer and the Regulatory Oversight Committee.

[436] *See* proposed Rule 17a–26(b)(3).

[437] Accordingly, at the end of a calendar year, the exchange or association would file the quarterly report for the fourth quarter within 20 business days after the end of the calendar year (which represents the end of the fourth quarter), and the annual report within 60 days after the calendar year end.

[438] *See* proposed Rule 17a–26(a)(1).

[439] *See infra* Sections V.E. and V.F.

[440] *See* proposed Rule 17a–26(a)(2).

[441] *See* proposed Rule 17a–26(b)(1)(ii). The term ''uniform'' in this context means that there should be uniformity in presentation of the data on the SRO's part for both quarterly and annual reports. *See also* Securities Act Release No. 8497 (September 27, 2004), 69 FR 59111 (October 1, 2004) (concept release regarding enhancing Commission filings through the use of tagged data). Data tagging uses standard definitions to translate text-based information into files that can be retrieved, searched, and analyzed through automated means.

[442] *See* proposed Rule 17a–26(b)(1)(ii).

compatible, and accessible program language. The proposed rule would not mandate a technology-specific format or a particular template for presenting the data, but it does contemplate that an exchange or association would select a commonly-acceptable standard that would emphasize presentation of the data in a simple layout with the ability to access and manipulate the data provided.

In proposing to require the exchanges and associations to establish procedures for preparing the data for quarterly and annual reports in an electronic format, the Commission hopes to minimize the costs incurred by exchanges and associations to generate the reports, and to foster a mutually acceptable format for the reports in a manner that facilitates historical comparisons and data tracking by each SRO and by the Commission. The Commission requests comment below on the nature of the proposed electronic format, as well as possible alternatives for a common format for all exchanges and associations that would be user-friendly and compatible with existing SRO and Commission computer systems. The Commission also seeks comment below concerning whether it should explore the feasibility of the filing of proposed quarterly and annual reports through a secure Web-based system.[443]

D. Quarterly Reporting of Regulatory Information

The categories of information specified below would compose the quarterly report required by the proposed rule. The program areas covered by these categories are designed to address the primary operations and main features of an exchange's or association's regulatory program, and constitute those areas for which the Commission has an interest in receiving information on a regular basis.

1. Information on the SRO's Surveillance Program

Proposed Rule 17a–26 would require exchanges and associations to report quarterly on the results of their surveillance programs, both manual and automated, during the reporting period.[444] This reported information would include, but would not be limited to, information on the number of exception reports and alerts generated, sorted by applicable rule or category.[445] An exchange or association also would be required to indicate the number of exception reports and alerts that were reviewed by the exchange or association and the number of exception reports and alerts that were referred for further investigation or for an enforcement proceeding.

The Commission believes that this information, as with the other categories of information required by the proposed rule, should better enable it to stay informed of novel and recurring issues that could present a challenge to an SRO's regulatory programs, as well as facilitate the Commission's ability to respond in a timely manner, as appropriate. The required information also should raise awareness of surveillance issues at the SROs, and allow the Commission and the SROs to take action when necessary to implement a coordinated response to any systemic concerns. Finally, the regular submission of this information should help focus the Commission's inspection resources on those matters that need urgent attention and encourage further cooperation between the Commission and each SRO in seeking solutions to regulatory challenges.

With respect to an exchange's or association's efforts to monitor for compliance with financial and operational requirements of its broker-dealer members, proposed Rule 17a–26 would require exchanges and associations to maintain records of and report information regarding all members that had net capital computation errors exceeding 10% of excess net capital, including an objective description of any action taken by the exchange or association in response to such deficiency.[446] An exchange or association also would be required to provide a list of members that were late in filing their FOCUS reports as well as a separate list of members that filed amended FOCUS reports, and provide an objective description of any response taken by the exchange or association in response to either of these situations.[447] The Commission believes that this information should allow it to better monitor the effectiveness of an exchange's or association's surveillance for compliance with net capital and FOCUS reporting obligations, and should permit the Commission to respond on a contemporaneous basis to circumstances that may warrant further attention.

Rather than identify the member firms by name, however, the proposed rule would require the lists to be prepared using a unique identifier specific to each member firm reported. Various provisions throughout the proposed rule, including the provision regarding compliance with financial and operational requirements, would require an exchange or association to assign each member firm (or its associated persons) a unique identifier for the purpose of reporting the information required by the proposed rule.[448] Although the exchange or association would not be required to include the identity of the member firm or its associated persons in the regularly-filed reports, a unique identifier would need to be used in a consistent manner in each quarterly and annual report in order to allow the Commission to spot trends involving a particular firm or individual. The protection afforded by a system of unique identifiers is intended to maintain the anonymity, with respect to the Commission, in information filed regularly with the Commission of the member firms or individuals subject to an investigation or regulatory action by an SRO. Commission staff could contact the SRO to follow-up if it saw a recurring pattern of a particular unique identifier being captured on the required reports.

2. Information on Complaints Received

Proposed Rule 17a–26 would require an exchange or association to report quarterly on all complaints it received during the reporting period that relate to the exchange's or association's regulatory programs.[449] An exchange or association would have to include objective summaries of the substance of

[443] *See* Securities Act Release No. 50486, *supra* note 423.

[444] *See* proposed Rule 17a–26(b)(2)(i). Automated surveillance programs refer generally to computer-based programs that monitor activity for compliance with the SRO's rules and the federal securities laws and regulations, and generate alerts and reports upon the occurrence of any conduct that does not comply with designated parameters. Manual surveillance programs refer generally to non-computer-based regulatory review of activity.

[445] Exception reports and alerts are produced in connection with the operation of an SRO's manual and automated surveillance programs and generally highlight unusual activity that may be indicative of violations of the SRO's trading rules or the federal securities laws and regulations.

[446] See proposed Rule 17a–26(b)(2)(ii).

[447] *See id.* The Financial and Operational Combined Uniform Single Report (''FOCUS report'') is filed by a broker or dealer on Form X–17A–5 pursuant to Rule 17a–5(a), 17 CFR 240.17a–5(a). The FOCUS report is the basic financial and operations report required of brokers and dealers that are subject to minimum net capital requirements under Rule 15c3–1 of the Exchange Act, 17 CFR 240.15c3–15. An amended FOCUS report generally is filed when a broker or dealer becomes aware of a material inaccuracy in its previous filing.

[448] For example, Firm ABC could be identified according to the unique identifier ''MF123.'' Subsequent references to this member in the same or any subsequent reports would need to refer to the member as ''MF123.'' The unique identifier should be used consistently throughout a particular report, including across each category of information, as well as consistently in all reports over time.

[449] *See* proposed Rule 17a–26(b)(2)(iii).

each complaint received. The summaries would be grouped by the subject matter of the complaint, and would use a unique identifier specific to the member and any associated persons involved.[450] Similar to the requirements for financial and operational reporting, discussed above, the provision requiring information on complaints received would require an exchange or association to assign each member a unique identifier for the purpose of reporting the information required by the proposed rule.[451]

The summary also would need to include the type of source of the complaint (*e.g.,* ''member'' or ''public''), the date the complaint was received by the exchange or association, and the disposition of the matter, including an objective description of any action taken or response by the exchange or association and the date of any such response. By requiring SROs to file with the Commission information on complaints they receive, the Commission should be able to better monitor potential problem areas and take steps designed to ensure that the exchanges and associations are taking appropriate, timely action in response to complaints. In addition, the requirement to compile and summarize information on complaints should help to focus an SRO's attention on the complaints it receives and should facilitate its ability to assess any trends with respect to, and track the resolution of, such complaints.

3. Investigations, Examinations, and Enforcement Actions

The Commission proposes to require exchanges and associations to report on all investigations, examinations, and enforcement cases opened, closed, and pending during the reporting period. With respect to investigations, proposed Rule 17a–26 would require exchanges and associations to provide a summary of, including a count of the aggregate numbers of, open, closed, and pending investigations, as well as provide an objective summary of the facts and circumstances of each investigation.[452] The summary information would include, but would not be limited to, the member firm and any associated person(s) under review using a unique identifier specific to the member and any associated person(s);[453] a factual description of any alleged rule violations; a general identification of the type of source that led to the investigation (*e.g.,* ''member complaint'' or ''automated surveillance alert''); a factual description of the matter under investigation (*i.e.,* without subjective commentary, explanation, or elaboration by the exchange or association) and the relevant security symbol or type of security involved; the date of the occurrence of the matter under investigation and the date the alleged violation was reported or detected; the date the exchange or association opened the investigation; and the length of time the investigation has been open. For closed investigations, the summary also would include the date the investigation was closed; the length of time the investigation was open; and an objective description of the recommendations and disposition of the investigation. In addition, the proposed rule would require a summary of the number of investigations conducted during the reporting period as well as the average elapsed time, in days, for investigations closed during the reporting period.[454] This information should allow the Commission to better monitor the operations and effectiveness of the SROs' investigation programs, as well as spot trends with respect to potentially violative conduct by member firms and their associated persons.

With respect to examinations, proposed Rule 17a–26 would require exchanges and associations to provide a summary of, including a count of the aggregate numbers of, open, closed, and pending examinations, as well as provide an objective summary of the facts and circumstances of each investigation.[455] The summary information would include, but would not be limited to, the following: a list of the member firms examined, using a unique identifier specific to the member firm;[456] the member's examination cycle (*i.e.,* the frequency with which the member is generally examined, such as a one-year or two-year cycle); whether the examination was a routine cycle examination or whether it was for-cause and an objective description of any reasons for a cause examination; whether the examination was of a new member of the exchange or association and, if so, the date the new member registered under the Exchange Act and the date the examination of the new member commenced; an objective description of the scope and subject matter of the examination and the areas and items reviewed during the examination; the date the examination was opened and, as applicable, closed; the length of time the examination has been or was open; an objective description of any potential violations (*i.e.,* the rules allegedly violated); and a factual description of the recommendations and disposition of the examination.[457] In addition, we propose to require exchanges and associations to provide data on the number of examinations conducted during the reporting period and the average elapsed time, in days, for all examinations that have been completed during the reporting period.[458] As with the information proposed to be filed with the Commission regarding investigations, the Commission believes that its receipt of this information should permit it to better monitor each SRO's reasons for opening, and progress in conducting, examinations, and to discern trends across SROs.

Finally, with respect to enforcement cases, the Commission proposes to require exchanges and associations to provide a summary of, including a count of the aggregate numbers of, open, closed, and pending enforcement cases, as well as provide a factual summary of the facts and circumstances of each case.[459] The summaries would include a list of all enforcement cases, grouped by subject matter, and provide factual case information, including, but not limited to, the member firm and any associated person(s) under review, identified according to a unique identifier specific to the member firm and associated person;[460] the type of source that led to opening the case (*e.g.,* tip, referral from another regulator, complaint, etc.); a factual description of any alleged violations and the relevant security symbol or specific type of security involved; the date of occurrence of any alleged violations and the date they were reported or detected; the date the enforcement case was opened; and the number of days the

[450] *See supra* note 448 and accompanying text.

[451] *See supra* note 448 and accompanying text. To refer to an associated person of Firm ABC, an exchange or association could use a suffix system as follows: ''MF123–1.'' The unique identifier should be used consistently throughout a particular report, including across each category of information, as well as consistently in all reports over time.

[452] *See* proposed Rule 17a–26(b)(2)(iv).

[453] *See supra* note 448 and accompanying text. The unique identifier should be used consistently throughout a particular report, including across each category of information, as well as consistently in all reports over time.

[454] *See* proposed Rule 17a–26(b)(2)(iv).

[455] *See* proposed Rule 17a–26(b)(2)(v).

[456] *See supra* note 448 and accompanying text. The unique identifier should be used consistently throughout a particular report, including across each category of information, as well as consistently in all reports over time.

[457] *See* proposed Rule 17a–26(b)(2)(v).

[458] *See id.*

[459] *See* proposed Rule 17a–26(b)(2)(vi).

[460] *See supra* note 448 and accompanying text. The unique identifier should be used consistently throughout a particular report, including across each category of information, as well as consistently in all reports over time.

case has been open.[461] For cases closed during the reporting period, the exchange or association also would be required to provide the date the case was closed; the number of days the case had remained opened; and an objective description of the disposition of the case, including whether the case was settled and the sanctions imposed, if any, including any fines and penalties.[462] In addition, the report would include a summary of the number of enforcement cases conducted during the reporting period and the average elapsed time for all enforcement cases closed during the reporting period.[463] The Commission believes that the required information on enforcement cases could assist it in monitoring, on a regular basis, each exchange's and association's vigilance with respect to, as well as its resolution of, enforcement matters. In addition, this information should assist the Commission in its efforts to monitor developing enforcement issues that potentially could impact SROs generally, as well as focus an SRO's attention on trends in its enforcement program.

In the Commission's view, the proposed requirement to compile and summarize information on investigations, examinations, and enforcement actions should help to focus an SRO's attention on these regulatory activities and should facilitate the ability of its management, including its Chief Regulatory Officer and its Regulatory Oversight Committee, to monitor the SRO's vigilance in pursuing and completing investigations, examinations, and enforcement activity.

4. Information on Listings Programs

Under proposed Rule 17a–26, exchanges and associations would be required to provide quarterly information on their listings programs.[464] Each exchange or association would be required to provide information including a list of all securities that were newly listed and delisted during the reporting period; a list of all issuers to whom the exchange or association, or a facility thereof, sent during the reporting period a notice alleging that such issuer does not satisfy a rule or standard for continued listing on the exchange or association, or a facility thereof, and, in the case of an exchange, a notice that the exchange has submitted an application under Exchange Act Rule 12d2–2 (17 CFR 240.12d2–2) to the Commission to delist a class of the issuer's securities, and, in the case of an association, a notice that the association has taken all necessary steps under its rules to delist the security from its facility; a list of all issuers, using unique identifiers,[465] alleged to not satisfy a rule or standard for continued listing and any action taken with respect to any listed issuer that allegedly failed to satisfy any rule or standard for continued listing; and a list of any issuers, using unique identifiers, that are alleged to have failed to file timely quarterly or annual reports.[466] Further, the proposed rule would require exchanges and associations to set forth the rule or standard for continued listing that the issuer is alleged to have failed to satisfy and the date when the issuer was alleged to have failed to satisfy such rule or standard for continued listing. The summary also would need to discuss the status of any compliance plan agreed upon between the issuer and the exchange or association, including any alleged failure on the part of the issuer to satisfy any of the provisions of such compliance plan.[467] For listed options, the exchange or association would be required to provide information on any options classes or series that did not satisfy the applicable listing standards or rules when trading commenced.[468] The Commission believes that this information should permit it to better monitor, among other things, listing and delisting trends and, in particular, the SROs' handling of delisting proceedings.

5. Copies of Board and Committee Meeting Agenda

Proposed Rule 17a–26 would require every exchange and association to provide, as part of their quarterly reports, the final agenda from any meeting of the board of directors or executive committee of the exchange or association, or any meeting of any committee of the board of directors or executive committee, that occurs during the reporting period.[469] An exchange or association would not be required to resubmit this information as part of its annual report.[470] The Commission believes that the quarterly filing of this information would assist it in its efforts to keep abreast of regulatory matters considered by an exchange's or association's board and its committees and would help to focus the Commission's inspection efforts.

E. Annual Reporting of Regulatory Information

In addition to filing quarterly reports for each calendar quarter, proposed Rule 17a–26(b)(3) also would require an exchange or association to file an annual report with the Commission.[471] The annual report would contain a cumulative year-end summary of the first seven categories of information filed as part of the quarterly reports,[472] as well as an audit of any electronic SRO trading facility and a summary of several additional categories of regulatory information, and would be due within 60 calendar days after the year's end.[473] The additional categories of annual regulatory information are discussed below.

1. Cumulative Summary of Quarterly Information

The annual report required by proposed Rule 17a–26(b)(3) would need to contain an aggregated year-end cumulative summary of the information specified in the first seven items of the quarterly report provisions of the proposed rule.[474] Accordingly, the annual report would need to include a compilation of the following quarterly information: (1) The results of the surveillance programs; (2) the results of the surveillance programs for financial and operations requirements; (3) the summary of complaints relating to the exchange's or association's regulatory program; (4) the summary of investigations; (5) the summary of examinations; (6) the summary of enforcement cases; and (7) the summary of listings information. Exchanges and associations would not be required to re-file copies of their board and committee agenda. The Commission believes that the compilation and

[461] *See* proposed Rule 17a–26(b)(2)(vi).

[462] *See id.*

[463] The Commission anticipates that the provision of enforcement information under proposed Rule 17a–26 also would assist in the Commission's initiative to receive information pursuant to Rule 19d–1 under the Exchange Act, 17 CFR 240.19d–1, in electronic format.

[464] *See* proposed Rule 17a–26(b)(2)(vii). With respect to the proposed requirement to provide information on listing programs, for an exchange or association that has an affiliate that lists and trades securities, the exchange or association would be responsible for assuring that its affiliate provides it with the required information on its listings program, and the exchange or association would be responsible for including such information in its quarterly report.

[465] *See supra* note 448 and accompanying text. The unique identifier should be used consistently throughout a particular report, including across each category of information, as well as consistently in all reports over time.

[466] *See* proposed Rule 17a–26(b)(2)(vii).

[467] *See id.*

[468] *See id.*

[469] *See* proposed Rule 17a–26(b)(2)(viii).

[470] *See* proposed Rule 17a–26(b)(3).

[471] *See id.*

[472] *See* proposed Rule 17a–26(b)(2)(i)–(vii).

[473] *See* proposed Rule 17a–26(a)(1).

[474] *See* proposed Rule 17a–26(b)(2)(i)–(vii).

aggregation of the quarterly report information into the annual report should facilitate review of the annual report by the exchange's or association's management and board, including the proposed Chief Regulatory Officer and the proposed Regulatory Oversight Committee. Given the electronic nature of the quarterly reports, the Commission expects that an exchange or association should be able to compile the data easily. The Commission solicits comment, below, on this provision, including the attendant burden of aggregating the quarterly information into the annual report.

2. Processes for Carrying Out Regulatory Responsibilities

Proposed Rule 17a–26 would require exchanges and associations to report on their internal policies and procedures for carrying out their regulatory responsibilities on an annual basis.[475] Under this provision, the Commission proposes to require each exchange and association to describe in detail its overall program of surveillance for member compliance with all applicable rules, laws, and regulations. The purpose of this requirement, among other things, is for the SRO to report on its designated examining authority responsibilities, as well as on its manual and automated surveillance programs, including the processes for ensuring compliance by its members with the SRO's rules, as well as the federal securities laws and regulations. By requiring exchanges and associations to prepare and submit this information yearly, the Commission should be better apprised of each exchange's or association's regulatory programs and processes and how they contribute to the SRO's fulfillment of its statutory and regulatory obligations. In addition, by preparing this report, exchanges and associations should have a better opportunity to focus on the effectiveness of their regulatory programs and to ascertain whether revisions to those programs are necessary. The Commission notes that the annual report is intended to provide a greater depth of information than would be provided in Exhibit H of revised Form 1 and new Form 2 [476] with respect to the exchange's or association's regulatory programs. The annual report also would need to highlight and summarize any new, revised, or terminated surveillance programs and discuss the reasons for such change.[477]

Each exchange and association would be required to identify the staff responsible for carrying out the SRO's regulatory and supervisory responsibilities by providing an organization chart detailing the various regulatory groups or divisions according to their areas of responsibility, and noting the names of staff and supervisors in each group or division.[478] This information is intended to provide the Commission with information about the organizational structure, and the lines of authority and areas of responsibility, with respect to the SRO's regulatory program.

3. Evaluation of the Regulatory Program

To complement the information provided by exchanges and associations pursuant to proposed Exhibit H of revised Form 1 and new Form 2, which would require exchanges and associations to describe generally their regulatory program and publicly disclose this information,[479] proposed Rule 17a–26 would require exchanges and associations to file with the Commission an evaluation of the effectiveness of their regulatory programs in effect during the reporting period.[480] An exchange or association would provide a discussion of the particular strengths and weaknesses of its regulatory program, as well as a discussion of any planned revisions to the regulatory program in response to any weaknesses, including those weaknesses uncovered during the process of preparing the quarterly and annual reports. In this regard, exchanges and associations would need to provide candid discussions of the overall operation and effectiveness of their regulatory programs, and would need to highlight the areas in which their programs should be improved. The Commission believes that this information should allow it to better monitor the operations of an SRO's regulatory program, with a particular emphasis on potential challenges to and weaknesses in an SRO's regulatory program. In addition, by preparing this information, SROs would be required to assess regularly the adequacy of their self-regulatory procedures and systems, and their ability to monitor properly the activity on their markets. The Commission also would expect this requirement to encourage closer cooperation between the Commission and the SROs in seeking solutions to regulatory challenges that SROs encounter.

4. Internal Controls

Under the proposed rule, an exchange or association would have to provide in the annual report a discussion of the internal controls implemented by the exchange or association that are designed to detect, prevent, and control any conflicts of interest between its market and other business interests and its self-regulatory responsibilities, and to assure that the exchange or association appropriately carries out its self-regulatory responsibilities.[481] The discussion would need to address the controls that assure the exchange or association adequately supervises its members, surveils for misconduct, and otherwise carries out its self-regulatory responsibilities even when the market operations and other commercial interests of the exchange or association create conflicting incentives.[482] The discussion also would need to address the controls that the exchange or association has in place that assures it carries out its self-regulatory obligations under the Exchange Act.[483] This provision is intended to assure that the exchange or association has the mechanisms in place to effectively control conflicts of interest arising from its business functions. The Commission expects exchanges and associations to remain acutely sensitive to the conflicts of interest that may arise between their commercial interests, including their facilities for the trading of securities, and their regulatory responsibilities. The periodic submission of information on the internal controls that address these conflicts should allow the Commission to better assess an SRO's ability to effectively carry out its regulatory obligations in the face of commercial pressures. Requiring an SRO to discuss its internal controls in the annual report also should help focus the SRO's attention on its internal controls and the operation of those controls.

[475] *See* proposed Rule 17a–26(b)(3)(i).

[476] *See supra* Section IV.C.6. (discussing proposed Exhibit H to revised Form 1 and new Form 2).

[477] Paragraph (d)(1) of proposed Rule 17a–26 would require exchanges and associations to file with the Commission a supplement in the event that the exchange or association implements, revises, or discontinues any manual or automated surveillance programs in the period between quarterly reports. The annual report should highlight and summarize any material reported pursuant to the interim changes provision, which is discussed in Section V.H. below.

[478] *See* proposed Rule 17a–26(b)(3)(i).

[479] *See supra* Section IV.C.6. (discussing proposed Exhibit H to revised Form 1 and new Form 2).

[480] *See* proposed Rule 17a–26(b)(3)(ii).

[481] *See* proposed Rule 17a–26(b)(3)(iii).

[482] *See id.*

[483] *See id.*

5. Employment Arrangements With Regulatory Personnel

Proposed Rule 17a–26 would require exchanges and associations to discuss the employment arrangements in effect between the exchange or association and its Chief Regulatory Officer and other senior regulatory program personnel.[484] The exchange or association would need to provide information on all aspects of its employment arrangements with its Chief Regulatory Officer and other senior regulatory program personnel, including salary and bonus levels and benefits and other cash and non-cash compensation paid to these individuals. This information would aid the Commission in its understanding and knowledge of the compensation arrangements for the most senior personnel at an exchange or association who are charged with carrying out the SRO's regulatory responsibilities.

6. Copies of Standing Committee Evaluations

Proposed Rule 17a–26 would require an exchange or association to file with the Commission copies of the most recent annual performance self-evaluation, as would be required by proposed Rules 6a–5 and 15Aa–3, of each Standing Committee of the board of a national securities exchange or registered securities association, as well as the proposed annual governance performance evaluation prepared by each exchange's or association's Governance Committee.[485] This information would allow the Commission to review each Standing Committee's assessment of its fulfillment of the responsibilities set forth in the committee's charter and an assessment of the overall governance of the exchange or association by its Governance Committee. The proposed responsibilities of the Standing Committees, as set forth in proposed Rules 6a–5 and 15Aa–3, generally are related to the self-regulatory functions of an exchange or association.

7. Compliance With Regulatory Plans

Under the proposed rule, exchanges and associations would be required to provide annual information on their efforts to comply with any recommendations resulting from any inspection or examination conducted by Commission staff.[486] Requiring exchanges and associations to provide periodic information on the status of their compliance with inspection recommendations should allow the Commission to respond more effectively to identified concerns and to monitor the implementation of recommended changes to an exchange's or association's regulatory program. Additionally, the proposed requirement should further encourage regular communication between exchanges and associations and the Commission's staff as a means to assist these SROs in tailoring and adjusting the implementation of the recommendations.

F. Audit Report of Electronic SRO Trading Facilities

Proposed Rule 17a–26 would require every exchange and association subject to the proposed rule that owns, operates, or sponsors an electronic SRO trading facility to file with the Commission, on an annual basis as part of the annual report, an audit report of an independent third party that assesses whether the operations of the electronic SRO trading facility comply with the rules governing the facility.[487] The purpose of the proposed requirement is to determine whether the facility's design and implementation is consistent with the exchange's or association's rules relating to such system that have been filed with and approved by the Commission.

For purposes of the proposed rule, an electronic SRO trading facility would be defined as a facility of an exchange or association that executes orders in securities on an electronic basis.[488] An independent third party would include a party not affiliated with the exchange or association that is qualified to render an opinion on such matters. We are not mandating the category of persons or entities that are qualified to perform such an audit and prepare the audit report with respect to an electronic SRO trading facility so that SROs would have flexibility in retaining an appropriate party to conduct their electronic SRO trading facility audit and prepare the audit report. At a minimum, however, the independent third party must have the capability to assess whether the system's design and implementation complies with the rules governing the facility. The Commission believes that the proposed requirement is a reasonable means to determine whether the systems aspects of electronic SRO trading facilities align with the rules that govern those facilities (*e.g.,* trading rules), particularly as electronic SRO trading facilities and their associated rules have become more complex over the years. This provision of the proposed rule is intended to evaluate the integrity of electronic SRO trading facilities with respect to compliance with applicable regulatory requirements and surveillance procedures.

G. Certifications

All quarterly and annual reports filed with the Commission pursuant to proposed Rule 17a–26 would be required to be accompanied by a signed certification executed on behalf of the exchange or association by the CEO or an equivalent officer, representing that the information contained in the report is current, true, and complete as of the date filed with the Commission.[489] Any supplemental filing submitted pursuant to proposed Rule 17a–26(d) also would need to be accompanied by a certification.[490] The Commission intends for the certification requirement to reinforce to exchanges and associations the importance of informing and updating the Commission on the operation of their regulatory programs and to remain mindful of their obligations as self-regulatory organizations.

H. Interim Changes

Proposed Rule 17a–26 would specify that any material changes to or material developments that effect an exchange's or association's regulatory program must be reported to the Commission in a supplemental filing within 10 business days after the occurrence of such event or change, along with a discussion of the event or change and the reasons for any change.[491] Examples of material changes that would require an exchange or association to file a supplement would include changes to the parameters of an exchange's or association's surveillance programs and any new, revised, or discontinued manual or automated surveillance programs that occurred since the filing of the previous quarterly report.[492] An exchange or association also would be required to report a material change to the organization or staffing of its regulatory or supervisory department or unit within 10 business days of such change.[493] The Commission believes that a 10 business day requirement

[484] *See* proposed Rule 17a–26(b)(3)(iv) and *supra* note 167 for a discussion of the term ''senior regulatory personnel.''

[485] *See* proposed Rule 17a–26(b)(3)(v). *See supra* Section II.B.3. for a discussion of proposed Rules 6a–5(f)(5), (g)(3), (h)(3), (i)(3), and (j)(6) and 15Aa–3, (f)(5), (g)(3), (h)(3), (i)(3), and (j)(6).

[486] *See* Rule 17a–26(b)(3)(vi).

[487] *See* proposed Rule 17a–26(a)(2).

[488] *See* proposed Rule 17a–26(j)(3).

[489] *See* proposed Rule 17a–26(c).

[490] *See id.*

[491] *See* proposed Rule 17a–26(d)(1).

[492] *See Id.*

[493] *See* proposed Rule 17a–26(d)(2).

strikes an appropriate balance between allowing the Commission to have prompt notice of material changes and giving an SRO adequate time to prepare and file a supplement with the Commission.

I. Confidentiality of Reports

An exchange or association could request confidential treatment of any report or other information that the exchange or association provides to the Commission pursuant to proposed Rule 17a–26.[494] The Commission would accord confidential treatment to the information to the extent permitted by law, including the Freedom of Information Act (''FOIA'').[495] An exchange or association would follow the procedures set forth in Rule 24b–2 under the Exchange Act to request confidential treatment of information filed pursuant to proposed Rule 17a–26.[496] With respect to the basis for requesting confidential treatment under FOIA, there are two exemptions that likely would be relevant to a Commission determination whether to grant confidential treatment for information filed with the Commission under proposed Rule 17a–26. First, FOIA Exemption 8 provides an exemption for matters that are ''contained in or related to examination, operating, or condition reports prepared by, on behalf of, or for the use of an agency responsible for the regulation or supervision of financial institutions.''[497] Similarly, Commission Rule 80(b)(8), implementing FOIA Exemption 8, states that the Commission generally will not publish or make available to any person matters that are ''[c]ontained in, or related to, any examination, operating, or condition report prepared by, on behalf of, or for the use of, the Commission, any other Federal, state, local, or foreign governmental authority or foreign securities authority, or any securities industry self-regulatory organization, responsible for the regulation or supervision of financial institutions.''[498] The information required by proposed Rule 17a–26 is material that would be submitted by SROs to their primary regulator in connection with and to facilitate the Commission's periodic inspections of exchanges and associations, and would supplement the Commission's examination and inspection program.[499]

Second, FOIA Exemption 4 provides an exemption for ''trade secrets and commercial or financial information obtained from a person and privileged or confidential.''[500] Commission Rule 80(b)(4)(iii), which implements FOIA Exemption 4, provides that this exemption is available for ''information contained in reports, summaries, analyses * * * arising out of, in anticipation of or in connection with an examination or inspection of the books and records of any person or any other investigation.''[501] The information to be filed with the Commission pursuant to the proposed rule concerns regulatory and supervisory processes of SROs, and may contain trade secrets and commercial information, such as information involving the proprietary design of an exchange's or association's surveillance systems.

J. Compliance Date

The first quarterly report required by proposed Rule 17a–26 would be due for the first full quarterly reporting period commencing six months after the publication of any final rule in the **Federal Register**.[502] The Commission believes that this implementation period would allow exchanges and associations sufficient time to begin tracking, to the extent they are not currently doing so, all categories of information required by the proposed rule, as well as to develop an electronic format for filing the proposed reports.

K. Exemptions and Extensions of Time for Filing Reports

Under Rule 17a–26 as proposed, the Commission would consider granting an extension of time for the filing of any reports or materials required by the proposed rule, upon the written request of an exchange or association or upon its own motion, if it determines that such extension is necessary or appropriate in the public interest and is consistent with the protection of investors.[503] In addition, upon the written request of the exchange or association or on its own motion, the Commission would consider granting an exemption from any of the proposed rule's requirements, either unconditionally or on specified terms and conditions, if it determines that such exemption is necessary or appropriate in the public interest and is consistent with the protection of investors.[504] The proposed rule also would exempt from its reporting requirements all notice-registered exchanges and limited purpose securities associations.[505]

L. Filing of Reports

Each report required by Proposed Rule 17a–26 shall constitute a ''report'' within the meaning of the Exchange Act, including the books and records provision of Sections 17(a) and the liability provisions of Sections 18(a) and 32(a).[506] In proposing this provision of the proposed rule, the Commission intends to specify that the reports submitted pursuant to proposed Rule 17a–26 would be subject to the general books and requirements of the Exchange Act and would be subject to the Exchange Act's provisions governing liability for misleading statements in reports filed with the Commission.

M. Request for Comment

The Commission invites interested persons to submit written comments on proposed Rule 17a–26. The Commission specifically requests comments on the following aspects of the proposed rule:

Question 125. Is the proposed rule sufficiently clear regarding the information that is proposed to be required to be filed in the quarterly and annual reports? Are there any categories of information that should be added or deleted?

Question 126. Are there provisions of the proposed rule that would be difficult for an exchange or association to satisfy and, if so, how could the provision in question be better tailored to assist in compliance?

Question 127. Are the time frames for providing quarterly reports, *i.e.*, within 20 business days after the calendar quarter end, and annual reports, *i.e.*, within 60 days after the year end, appropriate? Should they be shorter, *e.g.*, 10 business days after the end of the calendar quarter end for the

[494] *See* proposed Rule 17a–26(e).

[495] *See* 5 U.S.C. 552.

[496] *See* 17 CFR 240.24b–2.

[497] 5 U.S.C. 552(b)(8).

[498] 17 CFR 200.80(b)(8).

[499] *See* Section 17(b)(1) of the Exchange Act, 15 U.S.C. 78q(b)(1) (providing that all records of exchanges and associations are subject to such reasonable, periodic, special, or other examinations by representatives of the Commission as the Commission deems necessary or appropriate in the public interest, for the protection of investors, or otherwise in furtherance of the purposes of the Exchange Act).

[500] 5 U.S.C. 552(b)(4).

[501] 17 CFR 200.80(b)(4)(iii).

[502] *See* proposed Rule 17a–26(f).

[503] *See* proposed Rule 17a–26(g).

[504] *See* proposed Rule 17a–26(h)(1).

[505] *See* proposed Rule 17a–26(h)(2). *See also* 15 U.S.C. 78f(g) (notice-registered exchanges) and 78*o*–3(k)(1) (limited purpose securities associations).

[506] *See* proposed Rule 17a–26(i). *See also* 15 U.S.C. 78q(a) (Section 17(a) under the Exchange Act requiring the maintenance of certain books and records); 78r(a) (Section 18(a) under the Exchange Act providing for liability for misleading statements); and 78ff(a) (Section 32(a) under the Exchange Act providing for penalties for willful violations and false and misleading statements).

quarterly report, or longer, *e.g.*, 75 or 90 days after the year's end for the annual report?

Question 128. Should the quarterly and annual reports required by the proposed rule be based on the SRO's fiscal year, rather than on a calendar year basis? Are there reporting requirements in the proposed rule that should be filed on a fiscal year basis?

Question 129. Should the Commission require a fourth quarter report to be filed 20 business days after the calendar year end, given the requirement to file an annual report 60 days after the year end and the fact that the annual report would contain, in an aggregated form, information from the fourth quarter? If the Commission decides to require filing of only the first three quarterly reports, how could the information for the fourth quarter be separated in the annual report? Should it be separated in the annual report?

Question 130. Are there issues presented by requiring the report of an annual independent audit to assess the operations of an exchange's or association's electronic SRO trading facility for compliance with all applicable SRO rules and with the federal securities laws and regulations? Are there other ways for the Commission to achieve the same result, *i.e.*, to determine that the operation of any electronic SRO trading facility is conducted in accordance with all applicable statutory provisions and rules? Does the proposal provide sufficient time for the independent audit report to be prepared and incorporated into the annual report? If not, what time period would be sufficient? Should the audits be required more or less often? Should the Commission establish specific criteria to determine the entities qualified to conduct such an audit and prepare a report? Should the audit be required to be conducted by an independent auditor? Would independent public auditor be capable of conducting such audits? How much would such an audit cost?

Question 131. Are any issues presented by the Commission's proposed requirement that exchanges and associations establish procedures for the preparation of the quarterly and annual reports in a uniform, readily accessible, and usable electronic format? Should the Commission mandate the use of a particular format? Should the Commission require exchanges and associations to work together to develop a plan for filing the required reports in a standard electronic format? What role should the Commission play in such a process?

Question 132. If the Commission were to adopt a technological standard for the format of the electronic quarterly and annual reports, what standard would be appropriate? The Commission's primary concern in considering a technological standard is to minimize costs to the exchanges and associations, allow for easy manipulation and use of the data submitted, and not unduly restrict the development and adoption of new technological standards and formats. What standard or method would best serve to accomplish these goals? To what extent should the electronic reports be in a Microsoft Excel-type format versus a XML ''data tagging'' language format? If data tagging is the better approach, would XML, or a variation thereof, be an appropriate standard? To what extent does the appropriate electronic format depend upon the type and amount of data that would be required under the proposed rule?

Question 133. Should the Commission specify a method by which exchanges and associations file the proposed information, such as CD-ROM? Should the Commission explore the creation of a secure Web-based system for the filing of the required reports?

Question 134. Would the requirement that the annual report contain an aggregation of the quarterly information for a given year be a relatively simple task, given the electronic nature of the reports? Would the inclusion of aggregated quarterly data in the annual report be helpful to an SRO's management, including its Chief Regulatory Officer and the Regulatory Oversight Committee, in reviewing the operation of the SRO's regulatory program on an annual basis? What arguments are there against requiring the annual report to contain the aggregated quarterly data?

Question 135. Are there any items that should be added or deleted with respect to the results of surveillance programs, both manual and automated, and the results of surveillance for financial and operational requirements? Should the Commission require more or less detail on some or all of the items? Are there any alternatives to unique identifiers that could better accomplish the goals of tracking the information over time without including the identity of the member? Are there any issues presented by requiring the unique identifiers to be constant over time?

Question 136. Are there any items that should be added or deleted in connection with the summaries of complaints, investigations, examinations, and enforcement cases? Should the Commission require more or less detail on any of the subcategories mentioned under any of those items? Should the Commission require information on other categories of complaints? Are there any alternatives to unique identifiers that could better accomplish the goals of tracking the information over time without including the identity of the member and associated person under review? Are there any issues presented by requiring the unique identifiers to be constant over time?

Question 137. Is the provision requiring reporting of listings activity, including reporting of securities that were delisted or otherwise reprimanded for failure to satisfy listing standards, appropriate? Should the listings information in the proposed quarterly reports be expanded to include information on SRO delisting decisions that were appealed during the reporting period? Should the summary contain additional information on compliance plans? Is there any other information that should be added or deleted from this provision?

Question 138. Is the provision requiring an exchange or association to file with the Commission, as part of the quarterly report, copies of agenda for board and committee meetings appropriate? Should the Commission require the filing of the complete minutes for board and committee meetings, or, as an alternative, some specified portion of the minutes? If a specified portion were required, what should that portion include? Should the provision extend to subject matter committees that are not composed of directors and are not part of the official board committee structure?

Question 139. Is the requirement that the annual report contain a discussion of the internal policies and procedures an exchange or association uses to carry out its regulatory responsibilities appropriate? Are there any items under this category that should be deleted or added?

Question 140. Is the requirement that the annual report contain an organizational chart of the regulatory department appropriate? Should the Commission require more or less detail to be reported on this chart? Should the Commission require contact information and employee titles to be reported in the chart? Should the Commission limit or expand the categories of staff that need to be specifically identified in the chart?

Question 141. Is the provision requiring the SRO to evaluate the effectiveness of its regulatory program, including strengths and weaknesses, appropriate? Are there other

requirements that should be included in or deleted from this provision?

Question 142. Is the requirement that the annual report contain a discussion of the internal controls regarding conflicts of interest appropriate? Are there items that should be added or deleted from this provision?

Question 143. Is the requirement that the annual report discuss the employment arrangements with the Chief Regulatory Officer appropriate? Is requiring a discussion of employment arrangements with senior regulatory program personnel appropriate? Should the Commission limit the coverage of this provision to the five most highly compensated regulatory personnel? If so, is five the appropriate number or should the number be higher or lower?

Question 144. Is the requirement that the annual report contain a copy of the annual performance self-evaluation prepared by a national securities exchange's or registered securities association's standing committees, including its Nominating, Compensation, Audit, and Regulatory Oversight Committees, appropriate? Is the requirement to provide a copy of the annual performance evaluation prepared by the Governance Committee appropriate?

Question 145. Is the requirement to discuss efforts to comply with any recommendations or plan resulting from a Commission inspection or examination appropriate?

Question 146. Is the certification requirement appropriate? Is the chief executive officer the appropriate official to certify the quarterly and annual reports on behalf of the exchange or association? In light of the provision of proposed Rules 6a–5 and 15Aa–3, which would require exchanges and associations to establish a Chief Regulatory Officer, would it be more appropriate for the Chief Regulatory Officer to certify the required reports, or for both officers to certify?

Question 147. Under the Commission's current rules, if an SRO wanted to request confidential treatment for information filed pursuant to proposed Rule 17a–26, the SRO would need to submit a request for confidential treatment pursuant to Rule 24b–2, and follow that Rule's procedures. As discussed above, each SRO subject to proposed Rule 17a–26 would be required to submit quarterly and annual reports. In light of the regularity of filing of the proposed reports, should the Commission adopt a confidential treatment request procedure like Rule 83? If the Commission adopts a procedure like Rule 83, are there ways that the Rule 83 procedure should be tailored in the context of Rule 17a–26? If so, how?

Question 148. Are the provisions relating to the reporting of interim changes to the regulatory program and regulatory department or unit appropriate? Are there any other interim changes or developments, in addition to the changes to surveillance programs and changes to the exchange's or association's regulatory department cited in the rule, that should specifically be mentioned as triggering an obligation to file a supplement with the Commission?

Question 149. Are the defined terms appropriate and sufficiently clear? Is the definition of the term ''electronic SRO trading facility'' and ''regulatory subsidiary'' appropriate? Should the Commission add to, delete, or modify any of the defined terms in the proposed rule?

VI. Proposed Rule 17a–27

A. Background and Need for Proposed Rule 17a–27

Proposed Rule 17a–27 would require a member of a national securities exchange or registered securities association that is a broker or dealer to provide notice to the Commission and the exchange or association of which it is a member when it acquires more than a 5% ownership interest in such exchange, association or in a facility of such exchange or association through which it is permitted to effect transactions. The proposed rule is designed to facilitate the ability of the Commission and each exchange and association to monitor the accumulation of significant ownership interests by members, so as to help ensure that exchanges and associations effectively perform their regulatory obligations to oversee the operations of their members and trading in their own markets, and to further the ability of the Commission to carry out its regulatory oversight of exchange and associations. This reporting requirement also is designed to complement proposed Rules 6a–5(o) and 15Aa–3(o), which would require exchanges and associations to have rules that prohibit their members that are brokers or dealers from owning and voting more than 20% of the exchange or association or a facility of the exchange or association, and proposed Items 2 and 3 of Exhibit Q to revised Form 1 and new Form 2, which would require an exchange or association to provide to the Commission information on all persons that own more than 5% of the exchange or a facility of the exchange or association.[507]

B. Description of Proposed Rule 17a–27

1. Brokers and Dealers Subject to the Rule

Proposed Rule 17a–27 would require any member[508] of an exchange or association that is a broker or dealer to file a statement with the Commission if such member, alone or together with its related persons, acquires, directly or indirectly, beneficial ownership[509] of more than 5% of any class of securities or other ownership interest in a disclosure entity.[510] For purposes of proposed Rule 17a–27, the term ''disclosure entity'' would be defined to mean, with respect to a member, an exchange or association of which it is a member, or a facility of an exchange or association through which it is permitted to effect transactions.[511] The term ''related persons'' would be defined in proposed Rule 17a–27(a)(13) to cover the same relationships as the term ''related persons'' in proposed Rules 6a–5 and 15Aa–3.[512] As discussed above in Section II, the Commission believes it is important to capture all

[507] *See supra* Sections II.B.9. and IV.C.9. for a detailed discussion of these proposed rules.

[508] ''Member'' would be defined to have the meaning in Section 3(a)(3) of the Exchange Act, 15 U.S.C. 78c(a)(3). *See* proposed Rule 17a–27(a)(9).

[509] ''Beneficial ownership'' would be defined to have the meaning in Rule 13d–3 under the Exchange Act, 17 CFR 240.13d–3, as if (and whether or not) such security or other ownership interest were a voting equity security registered under Section 12 of the Act; *provided that,* to the extent any person beneficially owns any security or other ownership interest solely because such person is a member of a group within the meaning of Section 13(d)(3) of the Exchange Act, such person would not be deemed to beneficially own such security or other ownership interest for purposes of this section, unless such person had the power to direct the vote of such security or other ownership interest. *See* proposed Rule 17a–27(a)(3) and *supra* note 226.

[510] *See* proposed Rule 17a–27(b)(1). Proposed Rule 17a–27(c) also would require the member to provide a copy of the statement to the exchange or association, as applicable.

[511] *See* proposed Rule 17a–27(a)(6). The term ''disclosure entity'' would exclude exchanges registered under Section 6(g) of the Exchange Act, 15 U.S.C. 78f(g), and national securities associations registered under Section 15A(k) of the Exchange Act, 15 U.S.C. 78*o*–3(k). Because the Commission does not have primary responsibility for regulating these exchanges and associations, members of such exchanges and associations would not be subject to proposed Rule 17a–27. *See supra* note 77.

[512] *See* proposed Rules 6a–5(b)(19) and 15Aa–3(b)(20). ''Person'' would be defined to have the meaning in Section 3(a)(9) of the Exchange Act, 15 U.S.C. 78c(a)(9). *See* proposed Rule 17a–27(a)(11). Members can be natural persons. If a member is a natural person, and a broker or dealer, it would be subject to the proposed Rule. If the member is not a broker or dealer, the member's affiliated broker or dealer (which would be subject to the rule) would be required to aggregate the member's interest with its own interest.

potential relationships of a member with another person that could lead to the member having the ability to influence or control an exchange or association.[513]

2. Information Required To Be Filed

Any statement required to be filed by a member pursuant to proposed Rule 17a–27 would be required to include the following information:[514]

- The title of the class of securities or other ownership interests for which the member is required to file the statement, and the identity and form of organization of the disclosure entity;[515] and
- Such member's contact information, principal occupation (if the member is a natural person), and principal business (if the member is not a natural person).[516]

The member would be required to provide general information regarding the ownership interest that is the subject of the filing, including: (i) The total number of securities or other ownership interests of the disclosure entity issued and outstanding in each class or series; (ii) if the securities are publicly traded, the market(s) where they trade; (iii) any restrictions on ownership voting, transfers, or other disposition of such securities or other ownership interest of the disclosure entity; and (iv) any other material provisions relating to ownership of the disclosure entity.[517] In addition, the member would be required to state whether the disclosure entity is a reporting issuer under Section 12 of the Exchange Act.[518]

The member also would be required to state the aggregate number and percentage of shares of a class of securities or other ownership interest of the disclosure entity that are beneficially owned by the member.[519] In addition, the member would be required to indicate the aggregate number of shares or other ownership interest as to which the member has sole power to vote or to direct the vote, shared power to vote or to direct the vote, sole power to dispose or to direct the disposition, or shared power to dispose or to direct the disposition.[520] Also, if any other person is known to have the right to receive or the power to direct the receipt of dividends from, or the proceeds from the sale of, such securities or other ownership interest, the member would be required to include a statement to that effect and, if such interest relates to more than 5% of the securities or ownership interest, to identify such person.[521] Further, the member would be required to separately identify each related person whose ownership in a disclosure entity is included in the calculation of beneficial ownership required to be disclosed by the member, and provide the same ownership information for the related person as for the member.[522] As noted above in Section IV, these requirements are modeled on the information required to be included in Schedule 13D or 13G under the Exchange Act.[523] The Commission believes these requirements are appropriate because the intent of proposed Rule 17a–27—to provide the Commission with up-to-date information on the ability of members to control or influence the exchange—is similar to the purpose of the disclosure requirements of Sections 13(d) and 13(g) of the Exchange Act and the rules thereunder.[524]

The member also would be required to describe the power or ability of the member and its related persons to direct or cause the direction of the management and policies of the disclosure entity and any ability to exercise any influence or control over the regulatory responsibilities of the exchange or association.[525] In addition, the member would be required to describe any contracts, arrangements, understandings or relationships (legal or otherwise) among the member and its related persons and between such persons and any other person with respect to any securities or other ownership interest of the disclosure entity, including but not limited to the transfer or voting of any of the securities or ownership interest, finder's fees, joint ventures, loan or option arrangements, put or calls, guarantees of profits, division of profits or loss, or the giving or withholding of proxies. Such disclosure also would be required with respect to any of the securities or other ownership interests that are pledged or otherwise subject to a contingency the occurrence of which would give another person voting power or investment power over such securities or interest, except the statement would not need to disclose any standard default or similar provisions contained in loan agreements. The member would be required to provide the names of the other parties to these contracts, arrangements, understanding or relationships.[526]

Each statement filed by a member pursuant to this proposed rule would constitute a ''report'' within the meaning of Sections 17(a), 18(a), and 32(a) of the Exchange Act, and any other applicable provisions of the Exchange Act.[527] In addition, each statement required to be filed by a member pursuant to proposed Rule 17a–27 would be considered filed upon receipt by the Division of Market Regulation at the Commission's principal office in Washington, D.C.[528]

The disclosure requirements of proposed Rule 17a–27 are designed to provide information on members' significant interests in their regulators or a facility thereof. The Commission believes that this information would further the ability of the exchange or association to carry out its regulatory responsibilities with respect to its members, and for the Commission to perform its statutory oversight of the exchange or association, by helping to reduce the potential for conflict between a member and its regulator.

3. Timing of Filing

A member would be required to make its initial filing of a statement under Rule 17a–27 within 10 calendar days of when it, together with its related persons, beneficially owns more than 5% of any class of securities or other ownership interest, as set forth in paragraph (b)(1) of the proposed rule.[529] In addition, a member would be required to file an amendment to the statement within ten calendar days of any change in the information required to be provided. However, a member would not be required to amend its statement if there is an increase or decrease of less than 1% of the ownership interest last reported on the statement or any amendment thereto.[530]

[513] *See supra* Section II.B.9. for a discussion of the proposed definition of related persons.

[514] *See* proposed Rule 17a–27(b)(2).

[515] *See* proposed Rule 17a–27(b)(2)(i).

[516] *See* proposed Rule 17a–27(b)(2)(ii) and (iii).

[517] *See* proposed Rule 17a–27(b)(2)(iv).

[518] 15 U.S.C. 78*l*. *See* proposed Rule 17a–27(b)(2)(v).

[519] *See* proposed Rule 17a–27(b)(2)(vi)(A). For purposes of making this percentage determination, a class of securities means the outstanding securities of such class, exclusive of any securities of such class held by or for the account of the disclosure entity (the issuer), or a subsidiary of the disclosure entity. *See* proposed Rule 17a–27(a)(4).

[520] *See* proposed Rule 17a–27(b)(2)(vi)(B).

[521] *See* proposed Rule 17a–27(b)(2)(vi)(C). A listing of the shareholders of an investment company registered under the Investment Company Act of 1940 or the beneficiaries of an employee benefit plan, pension fund or endowment fund would not be required.

[522] *See* proposed Rule 17a–27(b)(2)(vii) and *supra* notes 519–521 and accompanying text.

[523] *See supra* Section IV.C.9.

[524] 15 U.S.C. 78m(d) and (g).

[525] *See* proposed Rules 17a–27(b)(2)(viii) and 17a–27(b)(2)(ix).

[526] *See* proposed Rule 17a–27(b)(2)(x).

[527] 15 U.S.C. 78q(a), 78r(a), and 78ff(a). *See* proposed Rule 17a–27(e)(i).

[528] *See* proposed Rule 17a–27(e)(ii).

[529] *See* proposed Rule 17a–27(b)(3).

[530] *See* proposed Rule 17a–27(b)(4).

The Commission believes the 10 day time period is reasonable in that it provides for timely disclosure by the member while still providing sufficient time to make and prepare the filing.

4. Filings With the Exchange or Association

A member also would be required to provide a copy of the statement and all amendments to the applicable exchange or association,[531] and the exchange or association would be required to post a copy of the statement on its publicly-accessible Web site within 10 calendar days of receipt.[532]

5. Exemptions

Finally, paragraph (f) of proposed Rule 17a–27 would provide a process for the Commission, upon written request or its own motion, to grant an exemption from the provisions of the proposed rule, either unconditionally or on specified terms and conditions, if the Commission determines that such exemption is necessary or appropriate in the public interest and is consistent with the protection of investors. Pursuant to this provision, the Commission would consider and act upon appropriate requests for relief from the rule's provisions and consider the particular facts and circumstances relevant to each such request, the potential ramifications of granting any exemption, and any appropriate conditions to be imposed as part of the exemption.

C. Request for Comment

The Commission seeks general comments on all aspects of proposed Rule 17a–27 as described above. In addition, the Commission requests that interested persons respond to the following specific questions:

Question 150. Would the information the Commission proposes to require members to provide to the Commission and the applicable SRO further SROs' ability to carry out their regulatory obligations? Would the information be useful to investors?

Question 151. Is the definition of beneficial ownership appropriate? Is it too narrow? Or is it too broad?

Question 152. Is the proposed definition of ''related persons'' too narrow? Too broad? Is there any other relationship that should be included?

Question 153. Should any person associated with a member be included in the proposed definition of ''related person,'' or should only those associated persons that possess, directly or indirectly, the power to direct or cause the direction of management and policies of the member, whether through the ownership of voting securities, by contract, or otherwise be included within the definition of ''related person''?

Question 154. Are the categories of information that would be required on the statement pursuant to proposed Rule 17a–27 appropriate? Are there other categories that should be included, or some that should be deleted?

Question 155. Should the Commission require members to provide any information in addition to what is proposed? If so, what additional information should be required?

Question 156. Is 10 days sufficient time for members to make the initial filing, or do commenters think that less time is necessary? Or is more than 10 days needed?

Question 157. Is 10 days sufficient time for members to update information previously filed, or do commenters think that less time is necessary? Or is more than 10 days needed?

Question 158. Is the proposed exclusion of members' ownership in notice registered national securities exchanges and limited purpose national securities associations from the scope of proposed Rule 17a–27 appropriate? If not, why should they be included?

Question 159. The proposal would only require members that are broker-dealers to file statements under Rule 17a–27; it would not require members that are natural persons and not registered as broker-dealers to file such statements. The Commission asks for comment on whether all members should be subject directly to the proposed reporting requirement.

Question 160. Should the Commission require that members provide the required information in a particular form? For instance, should the Commission create a standardized form to be used to file the reports required by proposed Rule 17a–27? If so, please provide detail as to the structure of such a form.

Question 161. Should the Commission apply the proposed rule to those persons that are not statutory ''members'' but that own one or more memberships, or ''seats,'' in an exchange, but are not registered brokers or dealers and do not trade on or through the facilities of the exchange, but lease the trading right to a broker-dealer? If so, should it depend upon whether the person retains the voting rights associated with such membership?

Question 162. Will members have access to, or the ability to obtain for each item, information that would be required to be filed pursuant to proposed Rule 17a–27? In particular, would a member be able to obtain the information required by paragraph (b)(2)(iv) on the total number of securities or other ownership interest issued and outstanding of a disclosure entity? Is there any information a member would not be able to easily obtain?

VII. Implementation

The Commission is proposing to implement the proposed rules and rule amendments and proposed revisions to forms as follows:

Proposed Rules 6a–5 and 15Aa–3 would require SROs to file proposed rule changes that comply with the applicable proposed rule's requirements no later than four months following the date of publication in the **Federal Register** of any governance rules adopted by the Commission, and would require that SROs have final rules approved by the Commission no later than ten months following such publication date. The SROs' rule changes would have to be operative no later than one year following the publication date of any governance rules adopted by the Commission.

Regulation AL would be operative one year following the date of publication in the **Federal Register** of the adoption of proposed Regulation AL.

Revised Form 1 and new Form 2 would become effective 30 days following the date of publication in the **Federal Register** of the adoption of the proposed amendments to these forms in the case of those applicants whose registration forms have not yet been approved by the Commission as of such publication date. The proposed amendments to Rules 6a–2 and 15Aa–2 also would become effective 30 days following the date of publication in the **Federal Register** of the adoption of these proposed amendments in the case of those applicants whose registration forms have not yet been approved by the Commission.

Pursuant to proposed paragraph (g) of Rule 6a–2 and proposed paragraph (f) to Rule 15Aa–2, any exchange or association that is registered with the Commission as of the publication date of the adoption of proposed amendments to these Commission rules would be required to file a complete new statement together with all exhibits no later than six months following such publication date. Until such filing, currently-registered exchanges and associations could continue to rely on the requirements of the current registration forms and the related rules.

[531] *See* proposed Rule 17a–27(c).

[532] *See* proposed Rule 17a–27(d).

The amendment to Rule 17a–1 would become effective 30 days following the date of publication in the **Federal Register** of the adoption of proposed amendments to Rule 17a–1.

Under proposed Rule 17a–26, the first quarterly report would be due for the first full quarterly reporting period commencing six months following the date of publication in the **Federal Register** of the adoption of proposed Rule 17a–26.

Finally, proposed Rule 17a–27 would become effective 60 days following the date of publication in the **Federal Register** of the adoption of proposed Rule 17a–27.

We request comment on these proposed implementation dates and whether they would provide sufficient time for SROs to comply with the proposed new rules and rule amendments and the proposed revisions to the forms. We request comment on whether more or less time is necessary for exchanges and associations to review their governance and regulatory structures in light of the proposed governance rules and whether the proposed implementation schedule would provide sufficient time for the SROs to prepare proposed rule changes, prepare for necessary governance changes, and conform to the requirements relating to the independence of the regulatory programs from market operations and other commercial interests.

We also seek comment on the feasibility of existing exchanges and associations preparing a complete new registration statement within the proposed six month time frame. We further recognize that many of the proposals are interrelated and thus some requirements cannot be complied with until all rule and form revisions are fully implemented, *e.g.*, certain revised Form 1 and new Form 2 Exhibits relate to items proposed in the governance rules. Accordingly, we request commenters' views on an implementation schedule that would achieve the Commission's goal of having any final rules become operative as soon as feasible, yet provide exchanges and associations with sufficient time to comply with any new requirements.

VIII. General Request for Comment

The Commission seeks comment on proposed Exchange Act Rules 3b–19, 6a–5, 15Aa–3, 17a–26, and 17a–27; proposed amendments to current Exchange Act Rules 6a–2, 15Aa–1, 15Aa–2 (redesignated Rule 15Aj–1), and 17a–1; proposed Regulation AL; proposed amendments to Form 1 and to Form 2 (redesignated Form X–15AA–1); and the proposed removal of Forms X–15AJ–1 and X–15AJ–2.

We ask commenters to address whether the proposed rules are appropriately tailored to achieve the goal of furthering sound governance as well as the other applicable provisions of the Exchange Act by requiring SROs' boards to be composed of a majority of independent directors and Standing Committees to be fully independent and by mandating the independence of the SROs' regulatory functions from their market operations and other commercial interests. We also request comments on the need to, and appropriateness of, requiring exchanges and associations to limit the ability of their members that are brokers or dealers from owning or voting a significant stake in the exchange or association (or facility thereof), to reduce conflicts of interest and the potential for a member to influence or control its regulator in a manner detrimental to its competitors or in a manner favorable to such member. In addition, we seek commenters' views regarding the proposal to enhance the transparency of SROs' governance and ownership structures and regulatory activities and its potential impact on users of the SROs' trading facilities, other market participants, and the public generally. Further, we seek comment on the proposed disclosure items of revised Form 1 and new Form 2, and the timing and form of amendments to proposed Rules 6a–2, 15Aa–1, and 15Aa–2. We specifically request comment on the ability of an exchange or association to obtain the ownership information necessary to comply with the ownership disclosure requirements of revised Form 1 and new Form 2.

We ask commenters to address Rule 17a–26, including whether there are items of information that should be added or deleted in the quarterly and annual reports to the Commission. We also specifically request comment on the effectiveness of proposed Regulation AL to enhance an exchange's or association's monitoring of listing and trading of affiliated securities and thus to reduce the potential conflicts inherent in such oversight, and whether proposed Regulation AL would provide adequate guidance for preparing and filing the required quarterly and annual reports. We also seek comment on the usefulness of the disclosures required by proposed Rule 17a–27. We request comment on whether proposed Rule 17a–27 is too broad or narrow in its reach and whether the Commission should prescribe a form for providing such disclosures. We also seek comment on the various proposed definitions and the proposed numerical criteria and threshold values that are contained in the proposed rules. We seek comments on the proposals as a whole, including their interaction with each other, and whether they would achieve their intended goals.

Commenters should, when possible, provide us with empirical data to support their views. Commenters suggesting alternative approaches should provide comprehensive proposals, including any conditions or limitations that they believe should apply. The Commission also invites commenters to provide views and data concerning the costs and benefits associated with the proposed new rules and amendments to existing rules and forms.

International Commenters

The Commission shares the goal of the international regulatory community in seeking greater convergence of robust standards for oversight of the securities markets, and recognizes that the proposals described above would impact foreign exchanges seeking to conduct business directly in the U.S. market. Accordingly, we are interested in obtaining comment from foreign exchanges and market participants about these proposals. We are interested in general comments, and, specifically, the extent to which any of the proposals would cause conflicts with foreign law. In assessing the comments, the Commission will be mindful of the importance of its investor protection mandate and the need for a level playing field.

We specifically request comment on the following topics:

Question 163. With regard to the Governance Standards Proposal, are there any direct conflicts of law in your jurisdiction? Has your jurisdiction had recent experience with the issues raised by this proposal? If so, please describe the approach taken in your jurisdiction.

Question 164. With regard to the Transparency Proposal, are there any direct conflicts of law in your jurisdiction? Has your jurisdiction had recent experience with the issues raised by this proposal? Please describe the types of reporting requirements to which exchanges in your jurisdiction are subject.

Question 165. With regard to the SRO Reporting Proposal, are there any direct conflicts of law in your jurisdiction, in particular with regard to privacy laws? Has your jurisdiction had recent experience with the issues raised by this proposal? If so, please describe the approach taken in your jurisdiction.

Question 166. With regard to the SRO Ownership Proposal, are there any direct conflicts of law in your jurisdiction? Has your jurisdiction had recent experience with the issues raised by this proposal? If so, please describe the approach taken in your jurisdiction.

IX. Paperwork Reduction Act Analysis

A. Proposed Rule 3b–19

The proposed amendments to Rule 3b–19 under the Exchange Act do not impose recordkeeping or information collection requirements, or other collections of information that require approval of the Office of Management and Budget (''OMB'') under 44 U.S.C. 3501, *et seq.* Accordingly, the Paperwork Reduction Act does not apply.

B. Proposed Amendments to Rule 6a–2, Revised Form 1, Rule 15Aa–2, and New Form 2

Proposed Rule 6a–2, revised Form 1, proposed Rule 15Aa–2, and new Form 2 contain ''collection of information'' requirements within the meaning of the Paperwork Reduction Act of 1995 (''PRA'').[533] The Commission has submitted them to the OMB for review in accordance with 44 U.S.C. 3507(d) and 5 CFR 1320.11. The title for the collection of information with respect to exchanges is ''Form 1 and Rules 6a–1 and 6a–2: Form of Application and Amendments.'' The collection of information contains a currently approved collection of information under OMB control number 3235–0017. The title for the new collection of information with respect to associations is ''Form 2 and Rules 15Aa–1 and 15Aa–2: Form of Application and Amendments.'' OMB has not yet assigned a control number for the new collection of information contained in proposed Rules 15Aa–1 and 15Aa–2 and new Form 2. An agency may not conduct or sponsor, and a person is not required to respond to, a collection of information unless it displays a currently valid control number.[534]

1. Summary of Collections of Information

The Commission proposes to require that an applicant for registration as a national securities exchange, or an exemption from exchange registration based on limited volume, file Form 1, as proposed to be revised. An applicant for registration as a securities association or an affiliated securities association would be required to file Form 2 (formerly Form X–15AA–1), as proposed to be revised.[535] Proposed Rule 6a–2 would require national securities exchanges to submit annual amendments and certain interim updating amendments to their registration application on the revised Form 1. Proposed Rule 15Aa–2 would require registered associations to submit annual amendments and certain interim updating amendments to their registration application on the new Form 2. The Commission also proposes to repeal Forms X–15AJ–1 and X–15AJ–2, which are now used by associations to file amendments to Form X–15AA–1.

The proposals would require an exchange or association to disclose more detailed information about its governance, regulatory functions, and ownership in its registration form and amendments thereto. The current Form 1 Exhibits that would be incorporated in revised Form 1 and new Form 2 require the following information:

- Copies of the applicant's constitution or articles of incorporation, by-laws, and rules (Exhibit A);
- Written rulings, settled practices and interpretations of the applicant (Exhibit B);
- Information about officers (current Exhibit J, proposed Exhibit D);
- Audited financial statements (Exhibit I);
- Separate financial statements for each affiliate of the applicant (current Exhibit D, proposed Exhibit J);
- General information about the applicant's affiliates and any unaffiliated entity that operates an SRO trading facility (current Exhibit C, proposed Exhibit K);
- A description of the manner of operation of any SRO trading facility used to effect transactions on the applicant (current Exhibit E, proposed Exhibit L);
- A complete set of all forms pertaining to application for membership, participation or subscription to the applicant, application for approval as a person associated with a member, participant, or subscriber, and any other similar materials (current Exhibit F, proposed Exhibit M);
- A complete set of all forms of financial statements, reports or questionnaires required of members, participants, subscribers, or any other users relating to financial responsibility or minimum capital requirements (current Exhibit G, proposed Exhibit N);
- A complete set of documents comprising listing applications (current Exhibit H, proposed Exhibit O);
- A description of the criteria for membership, conditions leading to suspension or termination of membership, and any procedures for suspension or termination (current Exhibit L, proposed Exhibit R); and
- A list of all members, participants, subscribers or other users and general information about such person (current Exhibit M, proposed Exhibit S).

The proposed additional Exhibits to the revised Form 1 and new Form 2 would require enhanced disclosures of exchanges and associations, as follows:

- A description of the composition, structure, and responsibilities of the applicant's board of directors and information about its Chairman and/or Chief Executive Officer (Exhibit C);
- A description of the structure, composition and responsibilities of any executive board and committee of the applicant and a complete governance chart of the applicant (Exhibit E);
- Copies of the applicant's governance guidelines and code of conduct and ethics (and a disclosure of any waivers of the code) (Exhibit F);
- An organizational chart illustrating the internal governance structure of the applicant and indicating each department or division and their respective responsibilities (Exhibit G);
- A description of the applicant's regulatory program, including its independence from the other functions of the applicant, any significant planned changes in the applicant's regulatory program, and any significant regulatory issues or events that may affect the applicant's regulatory program and a copy of any delegation plans or other contracts relating to regulatory services to be provided to the applicant (Exhibit H);
- A detailed description of the applicant's financial activities, including an itemization of the applicant's revenues and expenses derived from the applicant's regulatory activities, an itemization of non-regulatory expenses, a discussion of information necessary to an understanding of the financial condition of the applicant and any material changes in its financial condition, a discussion of any unusual or infrequent events or transactions or any significant economic changes that have had a material effect on the financial condition of the applicant and any known demands, commitments, events or uncertainties that would result in or are reasonably likely to result in a

[533] 44 U.S.C. 3501, *et seq.*

[534] 44 U.S.C. 3512.

[535] The Commission also proposes to amend Rule 15Aa–1 under the Exchange Act, 17 CFR 240.15Aa–1, to state that associations would file an initial application for registration on new Form 2. This is a technical change that would not impose recordkeeping or information collection requirements, or other collections of information within the meaning of the PRA.

material change in financial condition, a description of any significant business development involving the applicant, a description of all material contracts and all material related party transactions, a description of material commitments by the applicant for expenditures as of the end of the latest fiscal period, certain charitable contributions of the applicant in excess of $1,000, a table detailing the compensation (and the material terms of the employment agreements) of the five most highly compensated executives of the applicant, and a description of the compensation provided to directors (Exhibit I);

- An organizational chart of the relationship between the applicant, any facility of the applicant, and any affiliate of the applicant or a facility of the applicant, and information about the nature and ownership structure of those entities (Exhibit P);
- Enhanced disclosures of the ownership interest of any applicant or facility (''disclosure entity''), and information on any person and its ''Related Persons'' that directly or indirectly beneficially owns more than 5% of any class of securities or other ownership interest in a disclosure entity (Exhibit Q);
- The location of where the applicant's books and records are maintained (Exhibit U); and
- A schedule of listed securities and securities admitted to unlisted trading privileges, including information about the ''self-listing'' of the applicant, an SRO trading facility of the applicant, or any affiliate of the applicant or of an SRO trading facility of the applicant (current Exhibit N, proposed Exhibit T).

The proposals further would require exchanges and associations to submit any amendments to revised Form 1 or new Form 2 on a basis more frequent than is currently required. Proposed Rules 6a–2 and 15Aa–2 under the Exchange Act would require a national securities exchange, an exchange exempted from such registration as a national securities exchange based on limited volume, a national securities association, or an affiliated securities association to file an amendment to the revised Form 1 or new Form 2 (as applicable) within 10 calendar days after any material event takes place that renders inaccurate, or that causes to be incomplete: (i) Any information filed on the Execution Page of proposed Form 1 or new Form 2, or an amendment thereto; (ii) any information filed as part of proposed Exhibits C, D, E, H, I, J, K, M, N, O, P, S or U and as part of Item 3 of Exhibit F or Items 1, 5, 6, and 7 of Exhibit Q to the proposed Form 1 or new Form 2, or any amendments thereto;[536] and (iii) information filed as part of Items 2 or 3 of Exhibit Q, or any amendment thereto, except that such information is not required to be filed with respect to any person whose ownership change is less than 1% from the ownership interest last reported on the revised Form 1 or new Form 2, or any amendment thereto.[537]

An exchange or association also would be required to file an annual amendment to update revised Form 1 or new Form 2 (as applicable) in its entirety within 60 days of the end of its fiscal year. With respect to this annual amendment, each Exhibit would be required to be up to date as of the end of the latest fiscal year of the exchange or association.[538] An exchange or association also would be required to post continuously any amendments required to be filed under proposed Rules 6a–2(a)–(b) and 15Aa–2(a)–(b) on a publicly accessible Internet Web site, simultaneous with the filing of such information in paper form with the Commission.[539]

In addition, exchanges and associations that are registered with the Commission as of the date of publication in the **Federal Register** of adoption of the proposed amendments to the forms would be subject to a one-time requirement to file a complete revised Form 1 or new Form 2, as applicable, no later than six months following such publication date.

2. Proposed Use of Information

The purpose of the collections of information in proposed Rules 6a–2 and 15Aa–2, revised Form 1, and new Form 2 is to keep the Commission, market participants, and the public informed of the governance and ownership structure and regulatory program of each applicant and harmonize the procedures for application as a national securities exchange and as a registered securities association and for the submission of amendment to such applications. The information required to be disclosed should enable the Commission, market participants, and the public to gain a greater awareness of key features of the exchange's or association's governance and ownership structure and its regulatory programs. The disclosure items on the revenues and expenditures of the SRO's regulatory programs should be particularly useful to the Commission, market participants, and the public.[540] Further, the information collected should significantly enhance the transparency of each applicant's organizational and ownership structure and regulatory programs and assist the Commission in monitoring each applicant's compliance with the governance requirements contained in proposed Rules 6a–5 and 15Aa–3 under the Exchange Act.

[536] *See* proposed Rules 6a–2(a)(1)–(2) and 15Aa–2(a)(1)–(2). The referenced Exhibits would solicit the following information: (1) Information regarding the composition, structure, and responsibilities of the Board (Exhibit C); (2) information with respect to the officers (Exhibit D); (3) information regarding the structure, composition, and responsibilities of the executive board and each committee (Exhibit E); (4) information regarding the regulatory program (Exhibit H); (5) audited financial statements (Exhibit I); (6) separate financial statements, including a balance sheet and an income statement and statement of cash flows (Exhibit J); (7) information regarding each affiliate of the applicant and any unaffiliated entity that operates an SRO trading facility (Exhibit K); (8) the forms pertaining to the application for membership, participation, or subscription (Exhibit M); (9) the forms of financial statements, reports, or questionnaires required of members, participants, subscribers, or any other users relating to financial responsibility or minimum capital requirements (Exhibit N); (10) documents comprising the applicant's listing applications, including any agreements required to be executed in connection with listing and a schedule of listing fees (Exhibit O); (11) information on exchanges, associations, their facilities, and their respective affiliates (Exhibit P); (12) list of members, participants, subscribers, or other users and general information about each (Exhibit S); (13) location of books and records (Exhibit U); (14) disclosure of any waivers of the code of conduct and ethics for directors or officers (Item 3 of Exhibit F); or (15) information about each class or series of outstanding securities or other ownership interest of an exchange, association, or facility of either; whether and how each person and Related Person possess the power to influence the management or policies of the exchange, association or facility; if a Disclosure Entity is a partnership, a list of partners that have the right to or have contributed more than 5% of the partnership's capital; and contracts, arrangements, understandings or relationships between such persons, and between such persons and any other person with respect to any securities or other ownership interest of the Disclosure Entity (Items 1, 5, 6, and 7 of Exhibit Q).

[537] *See* proposed Rules 6a–2(a)(3) and 15Aa–2(a)(3). Items 2 and 3 of Exhibit Q would require the following information: (1) General information about any person who alone or together with its Related Persons, directly or indirectly beneficially owns more than 5% of any class of securities or other ownership interest in a Disclosure Entity (Item 2 of Exhibit Q); and (2) information regarding each Related Person identified above whose ownership in a Disclosure Entity is included in the calculation of beneficial ownership and the number and percentage of shares of ownership interest of such security that are beneficially owned (Item 3 of Exhibit Q). *See* proposed Exhibit Q of revised Form 1 and new Form 2.

[538] *See* proposed Rules 6a–2(b) and 15Aa–2(b).

[539] *See* proposed Rules 6a–2(c) and 15Aa–2(c). Pursuant to Rule 6a–2(d), however, an exchange would not be required to file amendments under paragraphs (a) or (b) of proposed Rule 6a–2 with respect to Exhibits A, B, M, N, S, or T or Items 1–7 of Exhibit L in paper form, as long as the exchange or association makes such information continuously available on an Internet Web site under its control, indicates the location of the Web site where such information could be found, and certifies that the information available at such location is accurate as of its date.

[540] *See* Sections 6(b)(1) and 15A(b)(2) of the Exchange Act, 15 U.S.C. 78f(b)(1) and 78*o*–3(b)(2).

3. Respondents

The collection of information in Rule 6a–1, proposed Rule 6a–2, and revised Form 1 would apply to every registered national securities exchange and every exchange exempt from registration as a national securities exchange based on limited volume. Currently, there are nine registered securities exchanges.[541] The collection of information in Rule 15Aa–1, proposed Rules 15Aa–2, and new Form 2 would apply to every national securities association and every affiliated securities association. Currently, there is one national securities association.[542]

4. Reporting and Recordkeeping Burden

Based on the information available to the Commission at this time, the Commission estimates that an applicant for registration as a national securities exchange, a securities association, or an affiliated securities association, or for an exemption from registration as a national securities exchange based on limited volume would incur an average burden of 157 hours to obtain information necessary to, and to prepare, each initial Form 1 or Form 2 application, respectively. The Commission estimates that the additional information required in Form 1, as proposed to be revised, would impose an additional paperwork burden of 110 hours on an applicant, for a total recordkeeping and reporting burden of 157 hours per applicant.[543] Proposed Form 2 would be a completely new form, and therefore does not have an existing ''collection of information'' burden within the meaning of the PRA.[544] However, because new Form 2 would impose the same paperwork burden on association applicants that revised Form 1 would impose on exchange applicants, the Commission estimates that the paperwork burden for Form 2 also would be 157 hours per applicant. Those exchanges and associations that are registered with the Commission as of the publication date of adoption of the proposed revisions to the forms would be subject to a one-time requirement to file a complete new registration statement on Form 1 or Form 2, as applicable, within six months following such publication date, and thus they also would have an initial paperwork burden of 157 hours each. The Commission estimates that any registered exchange or association, whose fiscal year ends after the date by which the one-time complete new registration statement on revised Form 1 or new Form 2, as applicable, would be required to be filed, but within the same calendar year that such one-time filing is required, would incur an additional reporting and recordkeeping burden of 20 hours for the first year to prepare an annual amendment to the revised Form 1 or new Form 2, as applicable.

In addition, the Commission estimates that an applicant will incur a yearly burden of 40 hours to comply with the requirement in proposed Rules 6a–2 and 15Aa–2 to file annual and periodic amendments to revised Form 1 or new Form 2. This figure represents a 15 hour increase from the current Form 1 average burden due to the estimated additional burden of the annual reporting requirements.[545]

Proposed Rules 6a–2 and 15Aa–2 also would require exchanges and associations to post their amendments on a publicly accessible Internet Web site. The Commission notes that exchanges and associations currently are required to maintain a publicly accessible Web site.[546] The Commission estimates that an exchange or association would incur a paperwork burden of 4 hours to post its amendment on a publicly available Web site,[547] and that the exchange or association would post an average of two amendments per year, for a total burden of 8 hours annually per exchange or association. The Commission requests comment on its estimate of the average number of amendments an SRO would file per year, as well as on its estimate of how long it would take an exchange or association to post an amendment on its Web site. The Commission also requests comment as to whether an SRO would incur any start-up costs in preparation for compliance with this Internet posting requirement under proposed Rules 6a–2 and 15Aa–2.

An applicant also would incur costs in the mailing of paper filings and copies to the Commission. The Commission estimates that the costs of mailing an initial application on revised Form 1 or new Form 2 would be $673.33.[548] The costs of filing a complete registration form on revised Form 1 or new Form 2 no later than six months following the final rules publication date is also estimated by the Commission to be $673.33.[549] The Commission estimates that the costs of mailing an amendment to revised Form 1 or new Form 2 would be $365.86.[550]

The Commission estimates that total reporting and recordkeeping burden for an exchange that submits an initial registration or exemption application on the revised Form 1 would be 157 hours and $673.33 per applicant.[551] For exchanges that are already registered with the Commission, the estimated reporting and recordkeeping burden for filing a complete revised Form 1 and any requisite updating amendments for the first year in which the final rules' are published would be 177 hours and approximately $1,039 per exchange. Thus, the Commission estimates that the total recordkeeping and reporting burden for all nine registered exchanges for the first year in which the final rules are published would be 1,593 hours and approximately $9,351. After the year in which an exchange initially files the revised Form 1, the Commission estimates that such exchange would bear an annual reporting and recordkeeping burden of 48 hours and $731.72, and that all exchanges would bear a total annual reporting and recordkeeping burden of 432 hours and approximately $6,585.

The Commission estimates that total reporting and recordkeeping burden for

[541] These nine registered national securities exchanges are the Amex, BSE, CHX, CBOE, ISE, NSX, NYSE, PCX, and the Phlx. The collection of information does not apply to national securities exchanges registered under Section 6(g) of the Exchange Act and limited purpose securities associations registered under Section 15(k) of the Exchange Act. Currently, Virt-X Exchange Limited (''Virt-X'') is operating under an exemption from registration as a national securities exchange based on limited volume. However, the Commission exempted Virt-X from Rules 6a–1, 6a–2 and 6a–3 under the Exchange Act. *See* Securities Exchange Act Release No. 41199 (March 22, 1999), 64 FR 14953 (March 29, 1999). Therefore, the Commission has determined not to include Virt-X as a respondent to the collection of information.

[542] The national securities association is the NASD. There currently are no registered affiliated securities associations.

[543] The current average burden of 47 hours for filing an initial application for registration on Form 1 is based on the Paperwork Reduction Act update as of Spring 2004.

[544] Current Rule 15Aa–1 under the Exchange Act, which prescribes Form X–15AA–1 as the initial registration application for associations, also does not have a pre-existing paperwork burden.

[545] The current average burden of 25 hours for filing annual and periodic updates on Form 1 is based on the PRA update for Form 1 as of Spring 2004.

[546] *See* Rules 19b–4(*l*) and (m) under the Exchange Act, 17 CFR 240.19b–4(*l*) and (m) (requiring SROs to post all proposed rule changes, as well as current versions of their rules, on their Web sites).

[547] The basis for the Commission's belief is the time estimated for posting by SROs on their Web sites of their proposed rule changes and current and complete versions of their rules. *See* Exchange Act Release No. 50486, *supra* note 423.

[548] The Commission estimates that an initial application and copies would weigh approximately 180 lbs and would be mailed via courier/shipping service.

[549] *Id.*

[550] The Commission estimates that an amendment and copies would weigh approximately 60 lbs and would be mailed via courier/shipping service.

[551] This total includes the burden of preparing and submitting the initial registration form, but does not include any initial start-up burden for creating a website (this is a burden on which the Commission is soliciting comments).

an association that submits an initial registration application on the new Form 2 would be 157 hours and $673.33 per applicant.[552] For associations that are already registered with the Commission, the estimated reporting and recordkeeping burden for filing a complete new Form 2 and any requisite updating amendments for the first year in which the final rules are published would be 177 hours and approximately $1,039 per association. Thus, the Commission estimates that the total recordkeeping and reporting burden for the one registered association for the first year in which the final rules are published would be 177 hours and approximately $1,039. After the year in which an association initially files the new Form 2, the Commission estimates that such association would bear an annual reporting and recordkeeping burden of 48 hours and $731.72.

5. Collections of Information are Mandatory

These collections of information would be mandatory. The collections of information filed with the Commission on revised Form 1 and new Form 2 with the Commission would be available to the public.

6. Record Retention Period

Exchanges and associations would be required to retain any collections of information required by revised Form 1 and new Form 2, respectively, in accordance with, and for the periods specified in, Exchange Act Rule 17a–1.[553]

C. Proposed Rules 6a–5 and 15Aa–3

Proposed Rules 6a–5 and 15Aa–3 contain ''collection of information'' requirements within the meaning of the PRA.[554] The Commission has submitted them to the OMB for review in accordance with 44 U.S.C. 3507(d) and 5 CFR 1320.11. The title of the new collection of information under proposed Rules 6a–5 and 15Aa–3 under the Exchange Act is ''Rules 6a–5 and 15Aa–3: Fair Administration and Governance of National Securities Exchanges and Registered Securities Associations.'' OMB has not yet assigned a control number for the new collection of information contained in proposed Rules 6a–5 and 15Aa–3 under the Exchange Act. An agency may not conduct or sponsor, and a person is not required to respond to, a collection of information unless it displays a currently valid control number.[555]

1. Summary of Collection of Information

Proposed Rules 6a–5 and 15Aa–3 under the Exchange Act would require national securities exchanges and registered securities associations to comply with, and have rules that comply with, the proposed rules' requirements, which are designed to facilitate the fair administration and governance of exchanges and associations. Various provisions of the proposed rules' also would apply to any ''regulatory subsidiary'' of the exchange or association.[556]

In particular, proposed Rules 6a–5(c)(2) and 15Aa–3(c)(2) under the Exchange Act would require the board of each SRO to affirmatively determine that each independent director has no material relationship with the national securities exchange or registered securities association, or any affiliate of the national securities exchange or registered securities association.[557] The board must make this determination upon the director's nomination or appointment to the board and thereafter no less frequently than annually and as often as necessary in light of the director's circumstances.[558] In order to allow the board to obtain the information necessary to make such determination, proposed Rules 6a–5(c)(3) and 15Aa–3(c)(3) would require a national securities exchange or registered securities association to establish policies and procedures to require each director, on his or her own initiative and upon request of the exchange or association, to inform the exchange or association of the existence of any relationship or interest that may reasonably be considered to bear on whether such director is an independent director. If the exchange or association were to request to receive this information from such directors, that would be a collection of information.

In addition, proposed Rules 6a–5(o)(5) and 15Aa–3(o)(5) under the Exchange Act would require a national securities exchange or registered securities association to have an effective mechanism for obtaining information from any owner of any interest in such exchange or association or any facility of such exchange or association relating to such ownership interest. If the exchange or association were to request to receive such information from such owners, that would be a collection of information.

Proposed Rules 6a–5(n)(4)(ii) and 15Aa–3(n)(4)(ii) under the Exchange Act would require national securities exchanges and registered securities associations to make and keep books and records necessary to evidence their compliance with proposed Rules 6a–5(n)(4)(i) and 15Aa–3(n)(4)(i).[559] However, the Commission believes that any reporting and recordkeeping burden that would be imposed by proposed Rules 6a–5(n)(4)(ii) and 15Aa–3(n)(4)(ii) would fall under the paperwork burden for Rule 17a–1 under the Exchange Act, which requires exchanges and associations to keep a copy of all documents and other such records as shall be made or received by them in the course of their business as such and in the conduct of their self-regulatory activities for a period of not less than five years.[560] The Commission preliminarily believes that exchanges already maintain records relating to the collection and use of regulatory fees, fines or penalties pursuant to Rule 17a–1 as part of their usual and customary activities and therefore such collection would not result in a burden under the PRA.[561] The Commission requests comment on whether exchanges already maintain these records.

With the exception of proposed Rules 6a–5(c)(3) and (o)(5) and 15Aa–3(c)(3) and (o)(5), the Commission believes that any other collection of information, within the meaning of the PRA, that would be imposed by proposed Rules 6a–5 and 15Aa–3 would be covered pursuant to the approved collection of information for Exchange Act Rule 19b–4.[562] In this regard, the Commission notes that exchanges and associations likely would need to amend their rules (including their or their regulatory

[552] This total includes the burden of preparing and submitting the initial registration form, but does not include any initial start-up burden for preparation for compliance with the Internet posting requirement (this is a burden on which the Commission is soliciting comments).

[553] 17 CFR 240.17a–1.

[554] 44 U.S.C. 3501 *et seq.*

[555] *See* 44 U.S.C. 3512.

[556] Pursuant to proposed Rules 6a–5(b)(18) and 15Aa–3(b)(19), ''regulatory subsidiary'' would mean any person that, directly or indirectly, is controlled by the national securities exchange or registered securities association, as applicable, and that provides, whether pursuant to contract, agreement or rule, regulatory services to or on behalf of the national securities exchange or registered securities association, as applicable. Several SROs have delegated to one or more subsidiaries the responsibility to carry out certain functions arising out of the SRO's obligations under the Exchange Act. *See supra* notes 78–81 and accompanying text.

[557] *See* proposed Rules 6a–5(c)(2) and 15Aa–3(c)(2).

[558] *See id.*

[559] Proposed Rules 6a–5(n)(4)(i) and 15Aa–3(n)(4)(i) would prohibit an exchange or association, respectively, from applying regulatory fees, fines or penalties to fund anything other than programs and operations directly related to their regulatory responsibilities. *See* discussion *supra* at II.B.8.b.

[560] 17 CFR 240.17a–1.

[561] *See* 5 CFR 1320.3(b)(2).

[562] 17 CFR 240.19b–4.

subsidiary's or facility's constitutions, charters, bylaws, rules or other governing documents) to comply with proposed Rules 6a–5 and 15Aa–3. Pursuant to Exchange Act Rule 19b–4, any such amendments would need to be filed with the Commission as proposed rule changes. The Commission notes that provisions of the proposed governance standards that would result in paperwork burdens for exchanges and associations, including with respect to any regulatory subsidiaries, would encompass: (i) A written charter for each Standing Committee;[563] (ii) a code of conduct and ethics and governance guidelines;[564] (iii) annual performance evaluations of each Standing Committee;[565] (iv) policies and procedures to require each director to inform the exchange or association of the existence of any relationship or interest that may reasonably be considered to bear on whether such director is an independent director;[566] (v) provisions relating to the fair representation of members;[567] (vi) policies and procedures for the separation of regulatory and market functions;[568] (vii) policies and procedures with respect to the dissemination of regulatory information and confidential information;[569] and (viii) rules that limit ownership and voting by members.[570] However, this collection of information would be collected pursuant to Exchange Act Rule 19b–4 and therefore would not be a new collection of information for proposed Rules 6a–5 and 15Aa–3.

2. Proposed Use of Information

The purpose of the collection of information in proposed Rules 6a–5(c)(3) and 15Aa–3(c)(3) is to enable national securities exchanges and registered securities associations to monitor the independence of their directors. This collection of information would provide exchanges and associations with a mechanism to determine whether they are in compliance with the requirement that their board be composed of a majority of independent directors,[571] as well as allow the board to affirmatively determine that a director has no material relationship with the exchange or association or any affiliate of the exchange or association.[572]

The purpose of the collection of information in proposed Rules 6a–5(o)(5) and 15Aa–3(o)(5) is to enable national securities exchanges and registered securities associations to monitor ownership of the exchange, association, or facility thereof, and analyze their capacity to meet their statutory responsibilities under Sections 6, 15A, 17, and 19 of the Exchange Act.[573] In this manner, investor confidence in the integrity of the marketplace would be enhanced.

Further, the collection of information may aid the exchange or association in complying with the disclosure requirements pertaining to director independence and ownership that are contained in revised Form 1 and new Form 2.

3. Respondents

The proposed collection of information in proposed Rules 6a–5(c)(3) and 15Aa–3(c)(3) would apply to nine national securities exchanges, one registered securities association and each director of a national securities exchange or registered securities association. The proposed collection of information in proposed Rules 6a–5(o)(5) and 15Aa–3(o)(5) would apply to nine national securities exchanges, one registered securities association and the owners of voting and ownership interests in each national securities exchange, national securities association, or facility of a national securities exchange or national securities association.

4. Reporting and Recordkeeping Burden

The Commission is unable to estimate precisely how many responses per year would be generated by proposed Rules 6a–5(c)(3) and 15Aa–3(c)(3), because any collection of information by an exchange or association from its directors would differ depending upon the number of directors on the exchange's or association's board, and also would depend on how often the board is required to request such information based on a director's circumstances. The Commission preliminarily estimates, however, that each exchange or association would request information approximately 2 times per year from approximately 17 directors, and that each request for information and response from each director would require approximately 1 hour to prepare and $0.37 to send,[574] for a total annual reporting and recordkeeping burden of 2 hours and $0.74 per director and 34 hours and $12.58 per exchange or association, for a total annual reporting and recordkeeping burden of 680 hours and approximately $252. The Commission specifically requests comment on these estimates.

The Commission is unable to estimate precisely how many responses per year would be generated by proposed Rules 6a–5(o)(5) and 15Aa–3(o)(5) under the Exchange Act, because any collection of information by an exchange or association from an owner of the exchange or association, or a facility of the exchange or association, would differ depending upon the number of shareholders or other owners of the exchange, association or facility. The Commission preliminarily estimates, however, that each exchange or association would request information approximately 2 times per year from approximately 500 owners and that it would cost each exchange or association $1.29[575] to mail the request to each owner, resulting in a total annual cost of $1,290 to each exchange or association and $12,900 annually for all exchanges and associations. The Commission also estimates that the initial preparation and sending of the request for information would require approximately 4 hours, the preparation and sending of each subsequent request would require 2 hours, and reviewing the responses to each of the 2 annual requests for information would require 5 hours, for a total initial annual reporting and recordkeeping burden of 16 hours for each exchange or association and an annual burden of 14 hours thereafter, and a total initial annual burden for all exchanges and associations of 160 hours and an annual burden of 140 hours thereafter. The Commission preliminarily estimates that each owner would require 1 hour

[563] *See* proposed Rules 6a–5(f)(2), (g)(2), (h)(2), (i)(2), and (j)(2) and 15Aa–3(f)(2), (g)(2), (h)(2), (i)(2), and (j)(2). The Standing Committees are the Nominating Committee, Governance Committee, Compensation Committee, Audit Committee, and Regulatory Oversight Committee. *See* proposed Rules 6a–5(b)(21) and 15Aa–3(b)(22).

[564] *See* proposed Rules 6a–5(p) and (q) and 15Aa–3(p) and (q).

[565] *See* proposed Rules 6a–5(f)(5), (g)(3), (h)(3), (i)(3) and (j)(6) and 15Aa–3(f)(5), (g)(3), (h)(3), (i)(3) and (j)(6).

[566] *See* proposed Rules 6a–5(c)(3) and 15Aa–3(c)(3).

[567] *See* proposed Rules 6a–5(c)(4), (c)(7) and (f)(3) and 15Aa–3(c)(4), (c)(7) and (f)(3).

[568] *See* proposed Rules 6a–5(n)(1) and 15Aa–3(n)(1).

[569] *See* proposed Rules 6a–5(n)(5) and 15Aa–3(n)(5).

[570] *See* proposed Rules 6a–5(o) and 15Aa–3(o).

[571] *See* proposed Rules 6a–5(c)(1) and 15Aa–3(c)(1).

[572] *See* proposed Rules 6a–5(c)(2) and 15Aa–3(c)(2).

[573] 15 U.S.C. 78f, 78*o*–3, 78q, and 78s.

[574] The Commission assumes that each request and response will weigh one ounce and will be mailed via first class mail at a rate of $0.37 per ounce.

[575] The Commission assumes that the request will weigh five ounces and will be mailed via first class mail at a rate of $0.37 for the first ounce and $0.23 for each additional ounce, for a total of $1.29.

to prepare and $1.29[576] to send to the exchange or association his or her response to the request, for a total annual reporting and recordkeeping burden of 2 hours and $2.58 for each owner and a total annual burden for all owners of 10,000 hours and $12,900. The Commission requests comment on these estimates.

Thus, the Commission estimates that the total annual reporting and recordkeeping burden for proposed Rules 6a5–3 and 15Aa–3 would be 10,840 hours and approximately $26,052. The Commission requests comment on this estimate.

5. Collection of Information is Mandatory

The collection of information under proposed Rules 6a–5(c)(3) and (o)(5) and 15Aa–3(c)(3) and (o)(5) would be mandatory. The collection of information under proposed Rules 6a–5(c)(3) and 15Aa–3(c)(3) would be required from directors of the exchange or association upon the request of the exchange or association. The collection of information under proposed Rules 6a–5(o)(5) and 15Aa–3(o)(5) would be required from owners of an exchange or association, or a facility of the exchange or association, upon the request of the exchange or association. The ownership information would be made public if such information were required to be disclosed by the exchange or association pursuant to the proposed changes to revised Form 1 and new Form 2, which would require exchanges and associations to report certain information with regard to any person that, alone or together with its related persons, directly or indirectly beneficially owns more than 5% of any class of securities or other ownership interest in the exchange, association, or any facility of the exchange or association.[577]

6. Record Retention Period

Exchanges and associations would be required to retain any collection of information required under proposed Rules 6a–5(c)(3) and (o)(5) and 15Aa–3(c)(3) and (o)(5), as applicable, in accordance with, and for the periods specified in, Exchange Act Rule 17a–1.[578]

D. Proposed Regulation AL

Proposed Regulation AL contains ''collection of information'' requirements within the meaning of the PRA.[579] The Commission has submitted them to the OMB for review in accordance with 44 U.S.C. 3507(d) and 5 CFR 1320.11. The title of the new collection of information under proposed Regulation AL under the Exchange Act is ''Regulation AL.'' OMB has not yet assigned a control number to the new collection of information contained in proposed Regulation AL under the Exchange Act. An agency may not conduct or sponsor, and a person is not required to respond to, a collection of information unless it displays a currently valid control number.[580]

1. Summary of Collection of Information

Pursuant to proposed Rule 800(b)(2)(i), if an affiliated security is listed on, approved for trading on, or trades pursuant to the rules of, a national securities exchange or registered securities association, the exchange or association would be required to file quarterly reports with the Commission summarizing such exchange's or association's (1) monitoring of the affiliated security's compliance with the exchange's or association's listing rules, including an explanation of such affiliated security's compliance with each applicable rule, and (2) surveillance of the trading of the affiliated securities by its members.[581]

Pursuant to proposed Rule 800(b)(2)(ii), if an affiliated security is listed on, approved for trading on, or trades pursuant to the rules of, a national securities exchange or registered securities association, the exchange or association would be required to file annually with the Commission a report prepared by a third party analyzing compliance by the affiliated security with the exchange's or association's listing rules.[582] Moreover, proposed Rule 800(b)(2)(iii)–(v) would require, in the event that the exchange or association alleges that the affiliated security is not in compliance with any applicable listing rule of the exchange or association, the exchange or association to: (1) Promptly notify the affiliated issuer; (2) file a report with the Commission within five days of providing such notice to the affiliated issuer, identifying the date on which the exchange or association alleged that the affiliated security was not in compliance, the action the exchange or association proposes to take, the applicable listing rule, and any other material information conveyed to the affiliated issuer;[583] and (3) provide the Commission with a copy of any response from the affiliated issuer regarding its alleged non-compliance.

2. Proposed Use of Information

The purpose of the collection of information in proposed Regulation AL is to provide further assurance that SROs carry out their regulatory responsibilities under the Act with respect to surveillance of affiliated securities, and provide the Commission greater ability to monitor the efforts of SROs.

3. Respondents

If an affiliated security is listed on, approved for trading on, or trades pursuant to the rules of, an exchange or association, the exchange or association would be required to comply with proposed Regulation AL. The Commission estimates that eight registered national securities exchanges and one registered securities association would potentially be subject to proposed Regulation AL.[584]

4. Reporting and Recordkeeping Burden

Although it is difficult to predict how often an exchange or association would list or trade an affiliated security that would trigger the requirements of proposed Regulation AL, for purposes of this Paperwork Reduction Act analysis the Commission estimates one such occurrence for each exchange and association.[585] The Commission specifically requests comment on this estimate.

With regard to the requirement of proposed Rule 800(b)(2)(i) that would require an exchange or association to

[576] The Commission assumes that each response will weigh five ounces and will be mailed via first class mail at a rate of $0.37 for the first ounce and $0.23 for each additional ounce, for a total of $1.29.

[577] *See supra* Sections IV.C.2. and IV.C.9. for a discussion of Exhibits C and Q in revised Form 1 and new Form 2.

[578] 17 CFR 240.17a–1.

[579] 44 U.S.C. 3501, *et seq.*

[580] 44 U.S.C. 3512.

[581] Such report must be approved by the exchange's or association's Regulatory Oversight Committee. *See* proposed Rule 800(c)(i).

[582] Such report must be filed no later than 60 calendar days following the end of the exchange's or association's fiscal year. *See* proposed Rule 800(b)(2)(ii).

[583] Such report must be approved by the exchange's or association's Regulatory Oversight Committee. *See* proposed Rule 800(c)(i).

[584] ISE, which does not have rules to list or trade any securities other than standardized options (which the Commission has proposed to exempt from the definition of ''affiliated security''), would not be subject to proposed Regulation AL. In addition, because the Commission has proposed to exempt security futures products from the definition of ''affiliated security,'' the two national securities exchanges registered pursuant to Section 6(g) of the Exchange Act and the limited purpose national securities association registered pursuant to Section 15A(k) of the Exchange Act would not be required to comply with proposed Regulation AL.

[585] The Commission notes that currently one exchange and one association would be subject to proposed Regulation AL with respect to one affiliated security each.

file quarterly reports with the Commission summarizing its monitoring of the listing and trading of the affiliated security on its facilities, the Commission understands that the exchanges and associations already have in place systems to monitor the compliance of listed securities with their listing rules and to monitor the trading of such securities through their facilities. The Commission preliminarily does not believe that exchanges or associations would need to make significant changes to these systems to comply with proposed Regulation AL, and that the cost of the monitoring and surveying pursuant to proposed Rule 800(b)(2)(i) would be incremental and insubstantial. The Commission recognizes, however, that exchanges and associations may need to conduct a review of an affiliated security's compliance with its listing standards more frequently to meet the quarterly reporting requirements, if the exchange or association does not currently conduct such review at least quarterly. The Commission preliminarily believes that exchanges and associations currently review for compliance on a quarterly basis, but assumes for purposes of estimating the burden of these proposed requirements that each SRO would perform two additional reviews per year and that an exchange or association would incur an additional burden of 8 hours per review, resulting in a total annual reporting and recordkeeping burden of 144 hours. The Commission requests comment on this estimate and whether SROs would need to perform any additional reviews to comply with the proposed requirements.

In addition, the Commission estimates that each of the eight registered national securities exchanges and the one registered securities association would spend $1.29 [586] to send each report to the Commission, 17 hours preparing and filing the initial quarterly report and 12 hours for each quarterly report thereafter to comply with the proposed rule, for a total of $5.16 and 53 hours per exchange or association for the first year and $5.16 and 48 hours per exchange or association for subsequent years, resulting in an initial total annual reporting and recordkeeping burden of $46.44 and 477 hours and a total annual burden of $46.44 and 432 hours thereafter. The Commission specifically solicits comment on these estimates and whether SROs would be required to modify their systems to comply with this proposed quarterly reporting requirement.

With regard to the requirement that an exchange or association file annually with the Commission a report prepared by a third party analyzing compliance by an affiliated security with the exchange's or association's listing rules, the Commission estimates that each exchange or association would spend approximately 5 hours interacting with the third party with respect to their preparation of the report, 4 hours reviewing each report received from the third party, and $1.29 [587] to send each report to the Commission, for a total of $1.29 and 9 hours per exchange or association per year, for a total annual reporting and record keeping burden of $11.61 and 81 hours for all exchange and associations. The Commission estimates that it would take each third party approximately 22 hours to prepare and file each annual report, for a total annual cost per exchange or association of $6,600,[588] resulting in a total annual cost burden of approximately $59,400.

With regard to the requirement in proposed Rule 800(b)(2)(iii) that an exchange or association promptly notify an affiliated issuer of alleged non-compliance with listing rules, the Commission believes that exchanges and associations currently have rules for the provision of notice to listed companies that fail to continue to meet certain listing requirements. Therefore, the Commission believes that any additional paperwork burden on the exchange or association created by this proposed requirement would be incremental and insubstantial. The Commission recognizes, however, that exchanges and associations may incur additional costs if they were required to notify an affiliated issuer more often than pursuant to their existing rules. The Commission does not know precisely how frequently notification would be required under the proposed rule, but estimates that each exchange or association would spend approximately 2 hours and $1.29 [589] to prepare and send each notification. The Commission requests comment on this estimate and whether exchanges' and associations' existing rules would require them to provide the notice to affiliated issuers that would be required by the proposed rule, and if so, whether their rules would require the notice to be required more often than pursuant to their existing rules.

Pursuant to proposed Rule 800(b)(2)(iv), if an affiliated security was alleged not to be in compliance with an exchange's or association's listing rules, the exchange or association would have to file a report with the Commission identifying the date the exchange or association alleged that the affiliated security was not in compliance, the action the exchange or association proposes to take, the applicable listing rule, and any other material information conveyed to the affiliated issuer. The Commission does not know how many responses would be generated by this requirement because it is unknown whether, or how often, an exchange or association would allege that an affiliated security fails to comply with the exchange's or association's listing rules, but estimates that a national securities exchange or registered securities association would spend approximately 5 hours per report and $1.29 [590] to send each report to the Commission to comply with the proposed rule. Assuming that each exchange and association had one affiliated security, and assuming that the exchange or association alleged that the affiliated security failed to comply with the exchange's or association's listing rules at least once per year, that would result in an annual total burden of 45 hours and $11.61.[591] For the same reason, the Commission does not know how many responses the exchange or association would receive from an affiliated issuer to whom it gave notice of non-compliance for which the exchange or association would need to file a copy with the Commission pursuant to proposed Rule 800(b)(2)(v). The Commission, however, estimates that an exchange or association would spend approximately 2 hours and $1.29 [592] per response to comply with the proposed requirement to file a copy

[586] The Commission assumes that each report will weigh five ounces and will be mailed via first class mail at a rate of $0.37 for the first ounce and $0.23 for each additional ounce, for a total of $1.29.

[587] The Commission assumes that each report will weigh five ounces and will be mailed via first class mail at a rate of $0.37 for the first ounce and $0.23 for each additional ounce, for a total of $1.29.

[588] The estimate assumes that the report will be prepared by outside legal counsel for the exchange or association at an estimated cost of $300 per hour, based on an hourly estimate for outside legal services obtained from industry sources. The Commission requests comment on this estimate, and on what type of entity the SRO may hire to prepare this report.

[589] The Commission assumes that each notice will weigh five ounces and will be mailed via first class mail at a rate of $0.37 for the first ounce and $0.23 for each additional ounce, for a total of $1.29.

[590] The Commission assumes that each report will weigh five ounces and will be mailed via first class mail at a rate of $0.37 for the first ounce and $0.23 for each additional ounce, for a total of $1.29.

[591] The Commission believes this likely overestimates the burden because it would assume that each affiliated security fell out of compliance each year. The Commission requests comment on this estimate.

[592] The Commission assumes that each response will weigh five ounces and will be mailed via first class mail at a rate of $0.37 for the first ounce and $0.23 for each additional ounce, for a total of $1.29.

of the response with the Commission. Assuming that each affiliated issuer responded once, that would result in a total annual burden of 2 hours per respondent, or 18 total hours. Thus, based on information available to the Commission at this time, the estimated total initial annual burden for proposed Regulation AL for all respondents would be 783 hours and approximately $59,504 and 738 hours and approximately $59,504 thereafter. The Commission requests comment on the estimates included in this analysis.

5. Collection of Information Is Mandatory

The collection of information would be mandatory if an affiliated security is listed on, approved for trading on, or trades pursuant to the rules of, an exchange or association. The collection of information filed pursuant to proposed Regulation AL with the Commission would be available to the public unless the exchange or association requested, and the Commission granted, confidential treatment pursuant to existing Commission rules and statutory authority.

6. Record Retention Period

Exchanges and associations would be required to retain any collection of information required under proposed Regulation AL in accordance with, and for the periods specified in, Exchange Act Rule 17a–1.[593]

E. Proposed Amendments to Rule 17a–1

The proposed amendments to Rule 17a–1 under the Exchange Act do not impose any new recordkeeping or information collection requirements, or other collections of information that require approval of OMB under 44 U.S.C. 3501, *et seq.* Accordingly the PRA does not apply.

F. Proposed Rule 17a–26

Proposed Rule 17a–26 contains ''collection of information'' requirements within the meaning of the PRA.[594] The Commission has submitted them to the OMB for review in accordance with 44 U.S.C. 3507(d) and 5 CFR 1320.11. The title of the new collection of information under proposed Rule 17a–26 under the Exchange Act is ''Rule 17a–26: Regulatory Reports of National Securities Exchanges and Registered Securities Associations.'' OMB has not yet assigned a control number for the new collection of information contained in proposed Rule 17a–26 under the Exchange Act. An agency may not conduct or sponsor, and a person is not required to respond to, a collection of information unless it displays a currently valid control number.[595]

1. Summary of Collection of Information

Proposed Rule 17a–26 under the Exchange Act would require national securities exchanges and registered securities associations to file with the Commission quarterly and annual reports, in electronic format, that provide details on the operation of their self-regulatory programs. In the proposed quarterly reports, exchanges and associations would be required to file with the Commission information on specified matters regarding their regulatory programs, including results of their surveillance programs; summaries of complaints relating to the operation of their regulatory programs; summaries of all investigations, examinations, and enforcement cases active during the reporting period; summaries of listings activity; and copies of the agenda of any board or board committee meeting that occurred during the quarter. In the proposed annual reports, exchanges and associations would be required to file with the Commission a year-end aggregation of the information submitted pursuant to the proposed quarterly reporting requirement, except for the board and board committee agenda; a discussion of their regulatory processes; an organizational staffing chart; an evaluation of the effectiveness of their regulatory programs; a discussion of their internal controls; a summary of employment arrangements with the Chief Regulatory Officer and senior regulatory personnel; copies of the most recent annual performance evaluation of the Standing Committees of the board (*i.e.*, Nominations, Compensation, Audit, and Regulatory Oversight Committees) and of the most recent annual performance evaluation of the Governance Committee; a discussion of efforts to comply with any recommendations or plan resulting from any inspection or examination conducted by Commission staff; and a report of a third-party audit of any electronic SRO trading facility owned, operated, or sponsored by the exchange or association. Exchanges and associations would be required to submit supplemental filings to report interim changes to their regulatory programs. The proposed rule also would direct each exchange and association to establish procedures for the preparation of the quarterly and annual reports in a uniform, readily accessible, and usable electronic format.

2. Proposed Use of Information

The purpose of the collection of information in proposed Rule 17a–26 is to enhance the Commission's ability to monitor compliance by national securities exchanges and registered securities associations with their regulatory responsibilities and to support the Commission's program of examinations of self-regulatory organizations. The information collected should help to keep the Commission informed of new developments and challenges affecting the regulatory programs of exchanges and associations, and should assist the Commission in more closely monitoring the exchanges' and associations' responses to critical regulatory issues affecting them. The collection of the information also should aid the Commission in better targeting its inspection resources.

3. Respondents

The proposed collection of information in proposed Rule 17a–26 would apply to every national securities exchange and every registered securities association, other than a national securities exchange registered pursuant to Section 6(g) of the Exchange Act[596] and a limited purpose national securities association registered pursuant to Section 15A(k)(l) of the Exchange Act,[597] which at this time includes nine registered national securities exchanges and one registered securities association.

4. Reporting and Recordkeeping Burden

The Commission believes that national securities exchanges and registered securities associations currently collect and retain much of the data that would be necessary to prepare the quarterly and annual reports that would be required by the proposed rule in connection with the execution of their self-regulatory responsibilities. To comply with the proposed rule, however, exchanges and associations would incur an additional burden in assembling the information into quarterly and annual reports and filing those reports with the Commission. The Commission expects that requiring the collection of information to be submitted in electronic format should lessen the burden on exchanges and associations, as well as reduce the burdens of printing, transmission, and

[593] 17 CFR 240.17a–1.

[594] 44 U.S.C. 3501, *et seq.*

[595] 44 U.S.C. 3512.

[596] 15 U.S.C. 78f(g).

[597] 15 U.S.C. 78*o*–3(k)(l).

record retention that are typically incurred with hardcopy reports.

Based on information available to the Commission at this time, the Commission estimates that each national securities exchange and registered securities association would incur an average burden of 40 hours to prepare each quarterly report and 35 hours to prepare each annual report, for an annual burden of 195 hours per respondent. Accounting for nine national securities exchanges and one registered securities association, the total burden to comply with the quarterly and annual reporting requirements in proposed new Rule 17a–26 is therefore estimated to be 1,950 hours per year. The Commission is unable to estimate with certainty the number of interim updates an exchange or association would need to file, since the need for any such updates would depend on each exchange's or association's particular circumstances. Nevertheless, for purposes of this burden analysis, the Commission estimates that an exchange or association would incur a burden of 4 hours to prepare each interim updating amendment, which would likely be required, on average, 5 times per year for a total of 20 hours per respondent and 200 hours total for the nine exchanges and one association. The Commission requests comment on the accuracy of these estimates. The total burden resulting from the proposed rule's quarterly and annual reporting provisions is estimated to be 2,150 hours and $60 [598] to prepare and file with the Commission each report and interim supplement.

For those exchanges or associations that own, operate, or sponsor an electronic SRO trading facility, the proposed rule would require such exchange or association to file annually with the Commission, as part of its annual report, an audit report prepared by an independent third party with respect to the electronic SRO trading facility or facilities of the exchange or association. The Commission estimates that nine national securities exchanges and one registered securities association would be required to obtain an annual audit, and each such exchange or association owning, operating, or sponsoring at least one such facility would spend approximately 15 hours interacting with the third party with respect to their conduct of the audit and preparation of the audit report and 20 hours reviewing each audit report received from the third party, for a total of 35 hours per exchange or association per year, for a total annual reporting and recordkeeping burden of 350 hours. With respect to the third-party auditor, the Commission estimates that it would take each third party 100 hours to conduct the audit of any such facility or facilities and prepare the audit report for each exchange or association that owns, operates, or sponsors at least one electronic SRO trading facility, for a total annual cost per exchange or association of $15,000,[599] resulting in a total annual burden cost of $150,000.

With respect to the burden imposed on exchanges and associations in connection with establishing procedures for the preparation of the reports required by the proposed rule in a uniform, readily accessible, and usable electronic format, based on information available to the Commission, the Commission estimates that each exchange or association would spend approximately 35 hours during the initial year of the proposed rule's effectiveness to comply with this requirement. Accounting for nine national securities exchanges and one registered securities association, the total burden per year to comply with the provision in proposed Rule 17a–26 regarding the uniform format for the quarterly and annual reports is estimated to be 350 hours.

Thus, based on information available to the Commission at this time, the estimated total reporting and recordkeeping burden for proposed Rule 17a–26 is 2,850 hours and $150,060. The Commission requests comment on the accuracy of these estimates.

5. Collection of Information Is Mandatory

The collection of information in proposed Rule 17a–26 under the Exchange Act would be mandatory. An exchange or association could request confidential treatment of any report or other information that the exchange or association provides to the Commission pursuant to proposed Rule 17a–26. The Commission would accord confidential treatment to the information to the extent permitted by law.

6. Record Retention Period

Exchanges and associations would be required to retain any collection of information required under proposed Rule 17a–26 in accordance with, and for the periods specified in, Exchange Act Rule 17a–1.[600]

G. Proposed Rule 17a–27

Proposed Rule 17a–27 under the Exchange Act contains ''collection of information'' requirements within the meaning of the PRA.[601] The Commission has submitted them to the OMB for review in accordance with 44 U.S.C. 3507(d) and 5 CFR 1320.11. The title of the new collection of information under proposed Rule 17a–27 under the Exchange Act is ''Rule 17a–27: Ownership of a National Securities Exchange, Registered Securities Association, Facility of a National Securities Exchange, or Registered Securities Association.'' OMB has not yet assigned a control number for the new collection of information contained in proposed Rule 17a–27 under the Exchange Act. An agency may not conduct or sponsor, and a person is not required to respond to, a collection of information unless it displays a currently valid control number.[602]

1. Summary of Collection of Information

Proposed Rule 17a–27(b) under the Exchange Act would require any member of a national securities exchange or registered securities association that is a broker or dealer to file a statement with the Commission if such member, alone or together with its related persons, directly or indirectly beneficially owns more than 5% of any class of securities or other ownership interest of an exchange or association of which it is a member or any facility of an exchange or association through which the member is permitted to effect transactions.[603] The member would be required to include in the statement certain information about the member and its related persons, information about the securities or other ownership interest that is the subject of the filing, detailed information about the member and its related persons' holdings, and a description of the ability of the member

[598] The Commission estimates that an average filing will weigh two ounces, accounting for a diskette and accompanying letter, and will be mailed via first class mail at a rate of $0.37 for the first ounce and $0.23 for the additional ounce, for a total of $0.60 per filing. At four quarterly reports, one annual report, and an estimated five interim supplements, the Commission expects that each exchange or association would incur a cost of $6 to comply with the proposed rule. The Commission solicits comments on the accuracy of this estimate.

[599] The estimate assumes that the report will be prepared for the exchange or association by an independent accounting firm or similar entity at an estimated cost of $150 per hour, based on an hourly estimate for auditing services obtained from industry sources. The Commission requests comment on this estimate, and on what type of entity an exchange or association may hire to prepare this report.

[600] 17 CFR 240.17a–1.

[601] 44 U.S.C. 3501, *et seq.*

[602] 44 U.S.C. 3512.

[603] A member would be required to file the initial statement within ten calendar days of becoming subject to the requirements of proposed Rule 17a–27(b). *See* proposed Rule 17a–27(b)(3).

and its related persons to control the exchange or association.[604]

Pursuant to proposed Rule 17a–27(b)(4), a member would be required to file a periodic amendment to the statement within ten calendar days of any change in the information required to be provided on the statement, except in the event of an increase or decrease of less than 1% of ownership of a class of securities or other ownership interest last reported on the statement, or any amendment thereto. Proposed Rule 17a–27(c) under the Exchange Act would require any member that is required to file the statement required pursuant to proposed Rule 17a–27(b)(1) or any amendment required pursuant to proposed Rule 17a–27(b)(4) to provide a copy of such statement or amendment to the exchange or association for which ownership information is being reported, or, if the relevant entity is a facility, to the applicable exchange or association.

Finally, proposed Rule 17a–27(d) under the Exchange Act would require an exchange or association that receives a copy of the report from a member to post the statement or amendment on a publicly-accessible Web site controlled by the exchange or association.

2. Proposed Use of Information

The purpose of the collection of information in proposed Rule 17a–27 is to enable the Commission and each exchange or association to monitor the accumulation of significant ownership interests in SROs by members, so as to further the ability of the SRO to perform its statutory obligations under the Exchange Act and the Commission's ability to perform its oversight responsibilities. Proposed Rule 17a–27 also would provide the Commission and each exchange or association with information relevant to monitor compliance with proposed Rules 6a–5(o) and 15Aa–3(o), which would require exchanges and associations to implement rules to prohibit their broker-dealer members from owning or voting more than 20% of the exchange, association, or a facility of the exchange or association, and an effective mechanism to divest any member and its related persons of any interest owned in excess of the 20% limitation.

3. Respondents

The requirements in proposed Rule 17a–27(b) to file a statement and updates with the Commission and in proposed Rule 17a–27(c) to provide a copy of the statement and any amendment to the applicable exchange or association would apply to the members of the nine registered national securities exchanges and the one registered securities association that are brokers or dealers and that beneficially own more than 5% of any class of securities or other ownership interest in the exchange or association, or a facility of the exchange or association through which such member is permitted to effect transactions. The Commission estimates that there are approximately 6,800 registered brokers and dealers[605] that would be subject to this requirement.[606] The requirement of proposed Rule 17a–27(d) that an exchange or association post a copy of any statement received from a member on an Internet Web site would apply to each of the nine registered exchanges and the one registered association.[607]

4. Reporting and Recordkeeping Burden

Because the amount of a member's interest in an exchange, association or facility could fluctuate, and because 5% is a fairly high threshold, the Commission is not able to determine with certainty how many broker-dealer members would be required to file a statement pursuant to proposed Rule 17a–27(b).[608] For purpose of this paperwork burden analysis, however, the Commission assumes that 100 of the 6,800 members that are brokers or dealers would file a statement with respect to ownership in one exchange or facility, and estimates that each of those members would amend such statement once per year.[609]

Based on information available to the Commission at this time, the Commission believes that, given the nature of their business, most members that would be subject to proposed Rule 17a–27 likely already have in place systems and procedures for tracking their ownership of securities, and that the new burden of tracking the ownership interests in an exchange, association or a facility necessary to prepare the statement required by proposed Rule 17a–27 would not be a substantial additional burden.[610] The Commission recognizes, however, that the scope of the reporting requirement may exceed the scope of ownership for which a member currently keeps records, since a member would need to aggregate its ownership interest with those of its related persons.

The Commission therefore estimates that proposed Rule 17a–27(b) would require approximately 35 hours per statement to prepare and file the initial statement,[611] that proposed Rule 17a–27(c) would require approximately 2

[604] *See supra* discussion in Section VI.B.

[605] Based on information available to the Commission at this time, there are approximately 6,800 registered brokers and dealers. Approximately 6,553 brokers and dealers filed FOCUS reports pursuant to 17 CFR 240.17a–5 (Exchange Act Rule 17a–5) at the end of 2003.

[606] Each registered broker or dealer must be either a member of an exchange or an association, and every member of an exchange or association is required to be a registered broker or dealer. *See* Section 15(b)(8) of the Exchange Act (15 U.S.C. 78*o*(b)(8)), Section 15A(g)(1) of the Exchange Act (15 U.S.C. 78*o*–3(g)(1)) and Section 6(b)(2) of the Exchange Act (15 U.S.C. 78f(b)(2)). The Commission believes, however, that using the number of registered brokers and dealers overestimates the number of members that would exceed the 5% ownership threshold and thus trigger the reporting requirements of proposed Rule 17a–27, given the amount of ownership it would take to trigger the requirement. The Commission requests comment on this estimate.

[607] The proposed rule would not apply to ownership in exchanges registered pursuant to Section 6(g) of the Exchange Act or limited purpose national securities associations registered pursuant to Section 15A(k)(l) of the Exchange Act. *See* proposed Rule 17a–27(a)(6).

[608] The Commission notes that although certain ownership information currently is reported to the Commission pursuant to Regulation 13D with respect to issuers registered pursuant to Section 12 of the Exchange Act, and Exhibit K to Form 1, which requires information with respect to each shareholder of an exchange that directly owns 5% or more of a class of a voting security of such exchange, information relating to members' interests in exchanges and associations and facilities generally is not currently required to be reported to the Commission.

[609] Based on the Commission's knowledge of exchanges that have demutualized and facilities of exchanges that the Commission has approved, the Commission estimates that the number of members that are brokers or dealers and that currently own more than 5% of an exchange, association or facility is less than 20, but has conservatively assumed 100 members would trigger the requirements of the proposed Rule. Furthermore, the Commission notes that the capital requirements necessary to enable a member to own more than 5% would be considerably high, and therefore limit the number of members likely to trigger the requirements. The Commission believes that this estimate overestimates the number of members that are brokers or dealers and that would own more than 5% of an exchange, association or facility, thus triggering the filing requirement of proposed Rule 17a–27. The Commission requests comment on this estimate, and a process for more accurately estimating the number of respondents.

[610] For example, to comply with Regulation 13D under the Exchange Act, 17 CFR 240.13d–1 through 13d–7, members must be able to track and report on Schedule 13D or Schedule 13G, 17 CFR 240.13d–1(a) and (b), as applicable, their beneficial ownership of any issuer specified in Exchange Act Rule 13d–1, 17 CFR 240.13d–1, if such beneficial ownership exceeds 5%. The Commission also believes it likely, given the nature of their business, that members keep records of their ownership in entities not covered by the requirements of Regulation 13D under the Act, particularly with respect to ownership in any exchange or association of which they are a member or any facility through which they effect transactions. The Commission requests comment on this belief.

[611] The Commission believes that this estimate may overestimate the amount of time required for members to prepare the statement, and requests comment on this estimate.

hours and $1.29[612] to prepare and send the copy of the statement or any amendment to the exchange or association, and that each amendment required by proposed Rule 17a–27(b)(4) would require 10 hours per amendment to prepare and file the amendment, for a total initial annual burden of 47 hours per respondent and 12 hours annually thereafter. Thus, based on information available to the Commission at this time, the Commission estimates the total initial annual burden imposed by proposed Rule 17a–27 on all members would be 4,700 hours and $258, and the annual burden thereafter would be 1,200 hours and $258. The Commission requests comment on the accuracy of these estimates.

If a national securities exchange or registered securities association receives a copy of a statement from a member pursuant to proposed Rule 17a–27(c), the exchange or association must post the statement on its Internet Web site pursuant to proposed Rule 17a–27(d). The Commission staff preliminarily estimates that 4 hours is the amount of time that would be required to post the statement on an exchange's or association's Web site.[613] The Commission staff estimates that the total annual burden for posting statements would be 400 hours. The Commission requests comment on its estimate of how long it would take an exchange or association to post a statement on its Web site.

Thus, the Commission estimates that the total initial annual reporting and recordkeeping burden for proposed Rule 17a–27 is 5,100 hours and $258, and 1,600 and $258 annually thereafter. The Commission requests comment on these estimates.

5. Collection of Information Is Mandatory

The collection of information under proposed Rule 17a–27 would be mandatory if a member that is a broker or dealer exceeds the ownership threshold. The collection of information required pursuant to proposed Rule 17a–27 would be provided by members to the Commission, as well as to the relevant exchange or association, and the exchange or association would be required by proposed Rule 17a–27(d) to post the information on its publicly available Web site.

6. Record Retention Period

Members would be required to retain any collection of information required under proposed Rule 17a–27 in accordance with, and for the periods specified in, Exchange Act Rules 17a–3 and 17a–4.[614] Exchanges and associations would be required to retain any collection of information required under proposed Rules 17a–27(c) and (d) in accordance with, and for the periods specified in, Exchange Act Rule 17a–1.[615]

H. Request for Comment

Pursuant to 44 U.S.C. 3506(c)(2)(B), the Commission solicits comments to: (i) Evaluate whether the proposed collections of information are necessary for the proper performance of the functions of the Commission, including whether the information would have practical utility; (ii) evaluate the accuracy of the Commission's estimates of the burden of the proposed collections of information and provide the Commission with data on proposed Rules 6a–2, 6a–5, 15Aa–1, 15Aa–2, 15Aa–3, 17a–26, 17a–27, Regulation AL, and revised Form 1 and new Form 2; (iii) enhance the quality, utility, and clarity of the information to be collected; and (iv) minimize the burden of the collections of information on those required to respond, including through the use of electronic or automated collection techniques or other forms of information technology.

Persons wishing to submit comments on the collection of information requirements should direct them to the following persons: (1) Desk Officer for the Securities and Exchange Commission, Office of Information and Regulatory Affairs, Office of Management and Budget, Washington, DC 20503; and (2) Jonathan G. Katz, Secretary, Securities and Exchange Commission, 450 Fifth Street, NW., Washington, DC 20549–0609, with reference to File No. S7–39–04. Requests for materials submitted to OMB by the Commission with regard to this collection of information should be in writing, refer to File No. S7–39–04, and be submitted to the Securities and Exchange Commission, Records Management, Office of Filings and Information Services, 450 Fifth Street, NW., Washington, DC 20549–0609. As OMB is required to make a decision concerning the collections of information between 30 and 60 days after publication of this release in the **Federal Register,** a comment to OMB is best assured of receiving full consideration if OMB receives it within 30 days of publication of this release.

X. Consideration of Costs and Benefits

The system of regulation of our nation's securities markets and market participants is grounded on the principle of self-regulation. Recent developments, including allegations of governance failures on the part of SROs, enforcement actions and examinations involving SROs and their members, increasing competitive pressures faced by SROs, and the growing trend of SROs to reorganize from mutual organizations to shareholder-owned entities, have prompted the Commission to review aspects of the SROs' governance and the transparency of their governance and regulatory processes. At the same time, the Commission has determined to review its regulation and oversight of SROs and to consider whether changes are necessary in light of recent developments involving SROs.[616]

Accordingly, the Commission is proposing to adopt new rules and amend existing rules and forms under the Exchange Act to strengthen SRO governance and the Commission's regulation and oversight of SROs. The proposals relate to the governance, administration, transparency, and ownership of SROs that are national securities exchanges and registered securities associations, and the periodic reporting of information by these SROs with respect to their regulatory programs. The proposals also relate to the listing and trading by SROs of their own or an affiliate's securities.

The Commission is sensitive to the costs and benefits that may result from the proposed rules and amendments, and has identified below certain costs and benefits associated with the proposals. The Commission encourages commenters to identify, discuss, analyze, and supply relevant data, including empirical data, regarding costs or benefits that may be associated with the proposals. The Commission preliminarily believes that the benefits of the proposed rulemaking to investors, users of the SROs' facilities, and other market participants, as well as the SROs, justify the costs.

A. Costs and Benefits of Proposed Rules 6a–5 and 15Aa–3

The Commission is proposing new Rules 6a–5 and 15Aa–3 under the Exchange Act that would set forth minimum standards of governance to be adopted and implemented by exchanges and associations, respectively. The

[612] The Commission assumes that the statement will weigh five ounces and will be mailed via first class mail at a rate of $0.37 for the first ounce and $0.23 for each additional ounce, for a total of $1.29.

[613] *See supra* note 547 and accompanying text.

[614] 17 CFR 240.17a–3 and 17a–4.

[615] 17 CFR 240.17a–1.

[616] *See supra* Section I.B. for a discussion of recent developments involving SROs.

proposed governance rules are intended to strengthen the governance of exchanges and associations, promote a greater degree of objectivity and impartiality in important SRO processes, foster a greater degree of independence of the regulatory programs of exchanges and associations, and address the conflicts that can arise when a mutual organization (such as an exchange) converts to another form of ownership.[617]

Proposed Rules 6a–5 and 15Aa–3 would require an exchange's or association's governing board to be composed of a majority of independent directors, with key board committees to be composed solely of independent directors (''Standing Committees''). For a director to be considered independent, the board of the exchange or association would be required to affirmatively determine that the director has no material relationship with the exchange or association or any affiliate of the exchange or association. The board would be required to make this determination upon the director's nomination or appointment to the board and thereafter no less frequently than annually and as often as necessary in light of the director's circumstances. Further, the exchange or association would be required to establish policies and procedures to require each director, on his or her own initiative and upon request of the exchange or association, to inform the exchange or association of the existence of any relationship or interest that may reasonably be considered to bear on whether such director is an independent director. Each Standing Committee would be required to conduct an annual self-evaluation of its performance, except that the Governance Committee would be required to conduct an annual evaluation of the governance of the exchange or association as a whole. Exchanges and associations would be required to provide sufficient funding and other resources to each Standing Committee, as determined by each Standing Committee, to permit it to fulfill its responsibilities and retain independent counsel and advisors. Additionally, the independent directors of the exchange's or association's board would be required to meet regularly in executive session, without the presence of management. When the board considered any matter that is recommended by or otherwise is within the authority or jurisdiction of any Standing Committee, a majority of the directors who vote on the matter would be required to be independent.

Under proposed Rules 6a–5 and 15Aa–3, each exchange and association would be required to separate its regulatory function from its market operations and other commercial interests, whether through functional or structural separation. Exchanges and associations also would be required to prevent the dissemination of regulatory and certain other information and to apply regulatory fees, fines, and penalties toward the funding of regulatory operations. In addition, the proposed governance rules would require exchanges and associations to impose on their members that are brokers or dealers ownership and voting limitations on their interest in the exchange, the association, or a facility of the exchange or association. Finally, the proposed governance rules would require that exchanges and associations adopt both a code of conduct and ethics for directors, officers and employees and governance guidelines.

To further strengthen the governance of exchanges and associations, the proposed rules also would apply to any person that, directly or indirectly, is controlled by the exchange or association and that provides, whether pursuant to contract, agreement or rule, regulatory services to or on behalf of the exchange or association (*i.e.,* a regulatory subsidiary), because they are an integral part of the SRO structure and carry out certain regulatory duties on behalf of the exchange or association. Thus, the Commission proposes to require these regulatory subsidiaries to be subject to the same governance standards applicable to the SRO itself.

The proposals contemplate that each exchange and association would file with the Commission proposed rule changes pursuant to Section 19(b) of the Exchange Act to amend their existing charters, bylaws, or rules to comply with the proposed rules.

1. Benefits

As discussed below, the Commission believes that exchanges and associations, as well as their members, users of their facilities, institutional and retail investors, shareholders or other owners of those exchanges that have demutualized, and the public generally, are likely to benefit significantly from the proposed governance rules.

The proposed rules are designed to enhance the independence and effectiveness of the boards of exchanges and associations, as well as their regulatory subsidiaries, by requiring those boards to be composed of a majority of independent directors. By mandating a structure that would require a majority of the board to be independent, the governance of these entities should be less susceptible to competing internal interests. The independent directors would constitute a majority of the SRO's board and thus should help foster a greater degree of independent decision-making by the exchange's and association's governing bodies. Further, a board whose independent directors constitute at least a majority of the board should help strengthen the hand of the independent directors when dealing with management. In the Commission's view, requiring SRO boards to have a majority of independent directors should help reduce conflicts of interest that otherwise might arise when persons with a nexus to the SRO are involved in key decisions. A board constituting a majority of independent directors also should help further the SRO's ability to meet its obligations under the Exchange Act, because those directors would not have relationships with the SRO, its members, or listed issuers that otherwise would impair disinterested viewpoints or judgments. Further, the requirement that each exchange and association establish policies and procedures to require each director on his or her own initiative or upon request of the exchange or association, to inform the exchange or association of the existence of any relationship or interest that may reasonably be considered to bear on whether such director is an independent director would aid the board in affirmatively determining whether such director could be considered independent. In addition, such requirement would provide the exchange or association with a mechanism by which to determine whether such exchange or association is in compliance with the majority independent board requirement. While meeting in executive session, free from the presence of management, the independent directors would be afforded the opportunity to discuss important matters regarding the exchange or association in a frank and open manner.

The proposed governance rules also would require that exchanges and associations, as well as their regulatory subsidiaries, administer a fair process that provides members with the opportunity to select at least 20% of the total number of directors.[618] The Nominating Committee would be required to nominate at least one director who is representative of issuers and at least one director who is

[617] *See supra* Section II.B. for a discussion of proposed Rules 6a–5 and 15Aa–3.

[618] *See* proposed Rule 6a–5(f)(3) and 15Aa–3(f)(3).

representative of investors and who, in each case, is not associated with a member or broker or dealer.[619] These proposals balance the Commission's goal of greater board independence with the right of members to participate in the governance of the exchange or association by providing members with a practical voice in exchange or association affairs, without jeopardizing the overall independence of the board.

Standing Committees composed solely of independent directors should result in a greater degree of objective decision-making with respect to the exchange's or association's core responsibilities. The Standing Committees' annual evaluation process should assist the exchange or association in identifying potential strengths and deficiencies in the governance, administration, regulatory programs and financial matters of the exchange or association and any regulatory subsidiary. Further, requiring exchanges and associations to provide sufficient funding and other resources to permit the independent directors and the Standing Committees to fulfill their responsibilities and to retain independent legal counsel and other advisors should provide independent directors with the ability to serve effectively.

Although the proposed governance rules do not require that an exchange's or association's Chairman be an independent director, the rules would require that if the exchange's or association's CEO is not also the Chairman, the Chairman must be an independent director.[620] Further, in the event an exchange or association elected to have a single individual serve as Chairman and CEO, the proposed governance rules would prohibit that person—who, as the CEO would not be ''independent''—from participating in any executive sessions of the board and from serving on any Standing Committee.[621] If a single individual served as both Chairman and CEO, the board would be required to designate an independent director as a lead director to preside over executive sessions of the board, and the board would be required to publicly disclose such lead director's name and a means by which interested parties may communicate with the lead director.[622] These provisions should further a greater degree of independent decision-making by the governing body of an exchange or association.

The proposed rules would require exchanges and associations to explicitly mandate that each director, in discharging his or her responsibilities as a member of the board, reasonably consider all requirements applicable to the exchange or association under the Exchange Act.[623] The Commission believes that this requirement would benefit investors, members, and other users of the facilities of the exchange or association by helping to ensure that directors of exchanges and associations fully recognize that the exchange or association has certain obligations under the Exchange Act, and that the directors act in accordance with those obligations. In particular, explicitly requiring directors to take into account the exchange's or association's obligations under the Exchange Act should help promote greater awareness and accountability on the part of directors about the responsibilities of the exchange or association, thus furthering the objectives of the Exchange Act.

Moreover, the Commission believes that the proposals to separate the regulatory operations of an exchange or association, and any regulatory subsidiary, from its market operations and other commercial interests,[624] to require regulatory funds to be applied only to fund programs and operations directly related to the exchange's or association's regulatory responsibilities,[625] and to require an exchange or association to establish procedures to prevent the dissemination of regulatory information other than to persons carrying out the exchange's or association's regulatory obligations,[626] should allow SROs to better manage the conflicts of interest inherent in the self-regulatory structure between the SRO's regulatory responsibilities and its market operations.[627] These provisions of the proposed governance rules would help promote greater accountability on the part of exchanges and associations with respect to their regulatory programs and strengthen their ability to meet their statutory obligations.

In particular, the proposal to require an exchange or association to use funds collected from regulatory fees, fines or penalties only to fund programs and operations directly related to the exchange's or association's regulatory responsibilities is designed to diminish the potential for an exchange or association to use its authority to raise regulatory funds for the purpose of benefiting its shareholders, or for other non-regulatory purposes, such as to fund executive compensation. The Commission believes that the proposed requirements to use regulatory funds only to fund regulatory activities would further advance the SROs' ability to effectively comply with statutory requirements, by helping to ensure that an SRO's regulatory activities are properly funded and the SRO is not abusing its regulatory authority.

The proposed rules also would require an exchange or association to establish policies and procedures reasonably designed to maintain the confidentiality of information required to be submitted to effectuate a transaction on or through the facilities of an exchange or association.[628] The proposed rules also would require that an exchange's or association's policies and procedures to be designed to reasonably prevent the dissemination of information collected from its members in the course of performing its regulatory obligations under the Exchange Act (''regulatory information'') to any person that is not an officer, director, employee, or agent of the exchange or association directly involved in carrying out the exchange's or association's regulatory obligations under the Exchange Act, and would prohibit an exchange or association from using regulatory information other than for regulatory purposes.[629] By helping to ensure that regulatory information is only used for regulatory purposes, the Commission believes that these proposed requirements would benefit investors and the public by helping to maintain the independence of an exchange's or association's self-regulatory function, thus furthering the ability of the exchange or association to carry out its regulatory responsibilities in compliance with the Exchange Act. In addition, because the proposed rules

[619] See proposed Rules 6a–5(f)(4) and 15Aa–3(f)(4).

[620] *See* proposed Rules 6a–5(m)(1) and 15Aa–3(m)(1).

[621] *See* proposed Rules 6a–5(m)(2) and (4) and 15Aa–3(m)(2) and (4).

[622] *See* proposed Rules 6a–5(m)(3) and 15Aa–3(m)(3). *See supra* Section II.B.7. for a discussion of these proposed rules.

[623] *See* proposed Rules 6a–5(l)(2) and 15Aa–3(l)(2). *See supra* Section II.B.5. for a discussion of this proposed requirement.

[624] *See* proposed Rules 6a–5(n)(1) and 15Aa–3(n)(1).

[625] *See* proposed Rules 6a–5(n)(4) and 15Aa–3(n)(4).

[626] *See* proposed Rules 6a–5(n)(5) and 15Aa–3(n)(5).

[627] *See supra* Section II.B.8. for a discussion of these proposed rules.

[628] *See* proposed Rule 6a–5(n)(5)(i)(C) and 15Aa–3(n)(5)(i)(C). This requirement would not apply if such information is aggregated to such an extent that no person whose information is included in the aggregated information can be identified, or unless the person has consented to the dissemination and use of its information by the exchange.

[629] *See* proposed Rules 6a–5(n)(5)(A) and (B) and 15Aa–3(n)(5)(A) and (B). *See supra* Section II.B.8.c. for a discussion of this proposed requirement.

would help to assure members that any information they provide to the exchange or association for regulatory purposes would not be used for competitive or other non-regulatory purposes, it would facilitate the provision of information to the exchange or association that would help the exchange or association carry out its regulatory obligations under the Exchange Act.

The proposed governance rules also would require the rules of an exchange or association to prohibit any member that is a broker or dealer, either alone or together with its ''related persons,'' from directly or indirectly beneficially owning and voting any interest in the exchange, the association, or a facility of an exchange or association through which the member is permitted to effect transactions, that exceeds 20% of any class of securities or other ownership interest of the exchange, association, or facility.[630] This proposed requirement would serve to mitigate the conflict of interest that could occur if a broker-dealer were to control a significant interest in its regulator. For example, an ownership and voting limit would reduce the ability of a member to influence the regulatory operation of the exchange or association for its benefit (such as by directing the exchange to refrain from diligently surveilling the member's conduct or from punishing conduct that violates the rules of the exchange or the federal securities laws). In addition, imposing such a limitation would make it more difficult for a member to direct or affect the business of an exchange or association to enhance its own commercial interests. Thus, the Commission believes that requiring exchanges and associations to impose ownership and voting limits on members could benefit investors and the public by reducing the risk that a member could use its controlling interest in its regulator to influence the regulatory process to its benefit.

The Commission believes that it is important that there be sufficient independence within the self-regulatory process to adequately check undue interference or influence from the persons or entities being regulated. These proposed rules, individually and as a whole, would help insulate the regulatory activities of an exchange or association from the conflicts of interest that may otherwise arise by virtue of its market operations. The independence of the regulatory process would be further strengthened through the appointment of a Chief Regulatory Officer who would administer the regulatory program and who would report directly to the independent Regulatory Oversight Committee.

The Commission believes that requiring exchanges and associations to adopt a code of conduct and ethics should help foster the ethical behavior of directors, officers and employees, because these individuals would be informed of the standards of conduct expected of them in fulfilling the responsibilities of their positions. Similarly, requiring exchanges and associations to adopt governance guidelines should help promote greater awareness of the governance principles that are intended to guide the exchange or association in implementing good governance.

2. Costs

The Commission anticipates that proposed Rules 6a–5 and 15Aa–3 would impose costs on exchanges and associations. Moreover, because the proposed governance rules also would apply to regulatory subsidiaries of the exchange or association, exchanges and associations would incur additional costs related to compliance by these entities with the proposed rules. Exchanges and associations not currently in compliance with the proposed governance rules would need to spend time and incur costs in modifying their internal processes and operations, as well as taking necessary steps to amend their rules, including their charters and bylaws, to comply with any new standards. Changes also would need to be made to the internal processes and operations, and rules, including charters and bylaws, of any regulatory subsidiaries or facility of the exchange or association to the extent the exchange or association would be required to apply the rules to those entities. Exchanges and associations would have to file with the Commission under Section 19(b) of the Exchange Act[631] proposed rule changes that would contain new rules or rule amendments that comply with the proposed governance rules. Modifying internal processes, drafting new charter, bylaw, and rule provisions, and preparing proposed rule changes to file with the Commission would impose costs on exchanges and associations, although some, if not all, SROs most likely would rely on in-house legal staff to perform these tasks. The Commission seeks comment on these costs.

Exchanges and associations that do not already have a board composed of a majority of independent directors would incur additional costs in modifying the composition of their boards. An exchange or association could comply with the majority independent board requirement by decreasing the size of its board and allowing some non-independent directors to resign; maintaining the current size of its board and replacing some non-independent directors with independent directors; or by increasing the size of its board and electing additional independent directors. In any event, unless an exchange or association currently complies with the proposed standards, it would incur costs in adding new directors or replacing existing directors. If an exchange or association elects to add independent directors to comply with the proposed requirement for a majority independent board, it could incur costs in finding qualified candidates that fit the proposed independence criteria. An exchange or association also could incur costs associated with preparing, as well as administering and reviewing, questionnaires to be completed by a director to determine whether such director could be considered independent. As discussed above in Section IX, the Commission estimates that each exchange or association would annually spend 34 hours and $12.58 if it were to request information from its directors regarding their independence, resulting in a total annual reporting and recordkeeping burden of approximately 340 hours and approximately $126 for all exchanges and associations.

Exchanges and associations that do not already have an independent Chairman, in the event that the Chairman and CEO are two individuals, could incur additional costs in hiring and compensating a new Chairman. An exchange or association could elect to name a current independent member of the board as Chairman; however, such a move would still likely impose compensation costs, in addition to costs incurred in changing leadership. Also, when modifying the composition of their boards, exchanges and associations could incur additional costs associated with preparing, mailing and processing proxy or information statements that would be necessary to hold a meeting to elect new directors. The Commission seeks comment on these costs.

In addition, exchanges and associations could have additional costs in adjusting to new board practices and providing independent directors with the necessary funding and resources to

[630] *See* supra Section II.B.9. for a discussion of proposed Rules 6a–5(o) and 15Aa–3(o).

[631] 15 U.S.C. 78s(b)(1).

carry out their duties.[632] For example, the proposed rules would require that independent directors meet regularly in executive session.[633] In addition, independent directors would be permitted to hire and obtain advice and assistance from independent legal counsel and other advisors as they determine necessary to carry out their duties.[634] The Commission seeks comment on these costs.

The proposed governance rules also would require exchanges and associations to administer a fair process that provides members with the opportunity to select at least 20% of the total number of directors.[635] Further, the Nominating Committee would be required to nominate at least one director who is representative of issuers and at least one director who is representative of investors and who, in each case, is not associated with a member or broker or dealer.[636] These proposed provisions are intended to codify in rules the fair representation requirements set forth in the Exchange Act.[637] Some SROs currently may be in compliance with these proposed requirements because they are commensurate with statutory standards that SROs currently must satisfy. However, the Commission requests comment concerning whether exchanges and associations would incur additional costs to comply with the specific requirements set forth in the proposed rules.

The proposed governance rules would require that each Standing Committee be composed entirely of independent directors;[638] that each Standing Committee perform an annual self-evaluation, except that the Governance Committee would perform an annual evaluation of the governance of the exchange or association as a whole;[639] and that each Standing Committee be provided sufficient funding and other resources, as determined by each Standing Committee, to permit it to retain independent legal counsel and other advisors.[640] The exchange or association could incur costs to organize board functions along the lines of the proposed Standing Committees. As noted above, an exchange or association could incur costs to add independent directors to its board, but there should not be any costs incurred as a result of appointing those independent directors to serve on Standing Committees. Similarly, the Commission does not believe that costs would be incurred in connection with the annual performance evaluation by each Standing Committee, unless such Standing Committee had to hire new employees or outside advisors to perform the evaluation. However, to the extent that the proposal causes an increase in the duties of board committee members, and a corresponding increase in the amount of time that directors spend fulfilling their committee obligations, exchanges and associations could find that there are additional costs in compensating directors for their duties. The Commission requests comment on the likelihood of this scenario. Further, to the extent that current funding is not sufficient to permit the independent directors to retain independent legal counsel and other advisors, an exchange or association could incur additional costs in providing such funding. The Commission seeks comment on these costs.

The proposed governance rules would require exchanges and associations to establish policies and procedures to assure the independence of their regulatory program from the operation or administration of any market operations and other commercial interests.[641] To this end, the proposed governance rules would require that the exchange's or association's regulatory program either be structurally separated from its market operations and other commercial interests or functionally separated but contained within the same entity.[642] In either case, the proposed governance rules would require that the board appoint a Chief Regulatory Officer to administer the regulatory program and that the Chief Regulatory Officer report directly to the independent Regulatory Oversight Committee.[643] The Commission seeks comment on these costs.

An exchange or association that undertakes a structural separation of its regulatory program from its market operations and other commercial interests through the creation of a new separate legal entity would incur costs associated with the formation or incorporation of such new entity, as well as costs associated with hiring and compensating individuals to manage such new entity. An exchange or association that undertakes to functionally separate its regulatory program from its market operations and other commercial interests also would incur additional costs associated with analyzing the exchange's or association's current regulatory practices and modifying such practices to comply with the proposed governance rules. Unless an exchange or association currently employs a Chief Regulatory Officer, the Commission expects that exchanges and associations would incur costs associated with hiring and compensating a Chief Regulatory Officer. The Commission seeks comment on these costs.

The Commission recognizes that an exchange or association could incur costs to establish policies and procedures necessary to segregate regulatory funds and to keep books and records necessary to demonstrate compliance with the proposed requirement to use regulatory funds only to fund programs and operations directly related to the exchange's or association's regulatory responsibilities.[644] The Commission preliminarily believes that those funds should be readily identifiable, and that exchanges and associations likely already segregate certain funds derived from regulatory fees, fines and penalties. To the extent that exchanges and associations do not already segregate regulatory funds, they would have to modify their existing financial controls to assure that they operate in compliance with the proposed requirement. The Commission seeks comment on whether exchanges and associations currently segregate regulatory funds, or can easily identify such funds, and the costs that would be incurred to make modifications. The Commission also seeks comment on whether exchanges and associations would have to put in place new financial controls, or whether the existing financial controls of an exchange or association are sufficient to assure that it operates in compliance with the proposed rules.

[632] *See* proposed Rules 6a–5(d)(3) and 15Aa–3(d)(3).

[633] *See* proposed Rules 6a–5(d)(1) and 15Aa–3(d)(1).

[634] *See* proposed Rules 6a–5(d)(2) and 15Aa–3(d)(2).

[635] *See* proposed Rules 6a–5(c)(4) and (f)(3) and 15Aa–3(c)(4) and (f)(3).

[636] *See* proposed Rule 6a-5(f)(4) and 15Aa-3(f)(4).

[637] *See* 15 U.S.C. 78f(b)(3) and 15 U.S.C. 78o-3(b)(4).

[638] *See* proposed Rules 6a–5(f)(1), (g)(1), (h)(1), (i)(1) and (j)(1) and 15Aa–3(f)(1), (g)(1), (h)(1), (i)(1) and (j)(1).

[639] *See* proposed Rules 6a–5(f)(5), (g)(3), (h)(3), (i)(3) and (j)(6) and 15Aa–3(f)(5), (g)(3), (h)(3), (i)(3) and (j)(6).

[640] *See* proposed Rules 6a–5(e)(3) and 15Aa–3(e)(3).

[641] *See* proposed Rules 6a–5(n)(1) and 15Aa–3(n)(1).

[642] *See* proposed Rules 6a-5(n)(2) and 15Aa–3(n)(2).

[643] *See* proposed Rules 6a–5(n)(3) and 15Aa–3(n)(3).

[644] *See supra* Section II.B.8.b. for a discussion of proposed Rules 6a–5(n)(4) and 15Aa–3(n)(4).

The Commission also recognizes that an exchange or association could incur costs to establish the policies and procedures reasonably designed to prevent the dissemination of regulatory information to any person not directly involved in carrying out the exchange's or association's regulatory obligations under the Exchange Act, and to keep certain other transaction-related information confidential, unless made available in aggregated form.[645] As part of their existing policies to comply with their obligations under the Exchange Act, the Commission believes that exchanges and associations already have policies and procedures designed to safeguard and restrict the use and dissemination of such information. Therefore, the Commission preliminarily believes that exchanges and associations would not need to expend substantial resources to modify their internal processes to comply with the proposed requirements. The Commission requests comment from exchanges and associations as to whether the measures they employ, if any, to safeguard and restrict the use and dissemination of confidential information currently comply with the proposed requirements, or whether exchanges and associations will need to modify their internal processes. An exchange or association also could incur costs in taking action necessary to assure that its officers, directors, employees and agents agree to comply with the proposed requirements (as required by the proposed rules),[646] and to educate new, as well as existing, employees about these requirements. The Commission seeks comment on the extent of these identified costs.

While the Commission believes that members of the boards of exchanges and associations already consider the Exchange Act responsibilities of the exchange or association in the course of performing their duties, the Commission recognizes that an exchange or association would incur costs necessary to amend its rules to explicitly require its directors to reasonably consider its Exchange Act responsibilities when discharging their responsibilities as members of the board.[647] The exchange or association also would incur costs necessary to inform its current board members of the rule and their obligations, and to inform new board members. The Commission seeks comment on these costs.

The Commission recognizes that exchanges and associations (and their facilities) likely would incur costs associated with establishing and enforcing rules to effectuate the proposed ownership and voting limits on members that are brokers or dealers. These costs could include exchange or association staff resources and legal fees related to drafting, preparing, and filing proposed rule changes with the Commission. The costs also would include staff resources, legal and filing fees related to filing corporate governing documents with the exchange's, association's or facility's state of incorporation. The Commission also recognizes that an exchange or association might need to obtain the approval of its members or shareholders, or of the owners of its facility, to implement such rules, which could require the exchange or association to prepare a proxy statement. The costs that would be required to obtain the necessary approval of any required change would depend on the number of such persons, the ownership concentration of the exchange, association or facility, and such persons' receptiveness to the proposed rules. In addition, corporate law might require the exchange or facility to notify its shareholders or owners of any ownership or voting restrictions by either sending a notice or by inserting a legend on the stock or ownership certificates. The Commission seeks comment on these costs.

The Commission also recognizes that exchanges and associations would incur ongoing costs associated with obtaining ownership information and monitoring the ownership interests of members for compliance with the proposed ownership and voting limits. Facilities also could incur these costs to the extent the exchange or association requires the facility's help to obtain and monitor ownership by members and their related persons in the facility. As stated above in Section IX., the Commission estimates that an exchange or association would spend approximately 14 hours and $1,290 annually if it determined to request ownership information from owners of voting and ownership interests. Thus, the Commission estimates that all exchanges and associations annually would spend a total of approximately 140 hours and $12,900 if they requested such ownership information. The Commission requests comment on this estimate. In addition, an exchange or association, as well as a facility, could incur costs of enforcing the ownership and voting limits. For example, an exchange could incur costs involved with redeeming shares held in excess of the proposed limits if the exchange chooses to provide that any such excess shares would be purchased by the exchange. An exchange, association or facility also could incur costs associated with monitoring votes cast at any shareholder meeting to determine that no member and its related persons subject to the voting limits exceeded those limits.

Any member and its related persons that owns in excess of the proposed limit of any class of securities or other ownership interest of the exchange, association, or facility could incur costs involved with divesting the portion of its ownership interest that exceeds the limit. As stated above in Section IX., the Commission preliminarily believes that only two members that are brokers or dealers currently own greater than 20% of a demutualized exchange or facility.[648] The Commission specifically requests comment on this issue, and whether any other broker-dealer members (alone or together with their related persons) currently own more than 20% of an SRO or a facility of an SRO. The Commission also recognizes that implementation of the proposed ownership and voting restrictions on members that are brokers or dealers potentially could reduce the value of the ownership interests in the exchange, association, or facility, to the extent that the proposed requirements adversely affect the free transferability of the securities, which would impact the owner of the securities, as well as the exchange, association, or facility. The Commission seeks comment on these costs.

Finally, the proposed governance rules would require each exchange and association to adopt a code of conduct and ethics for directors, officers and employees, as well as governance guidelines that include specified provisions.[649] Some exchanges or associations could already have codes and guidelines that comply with the proposed governance rules, in which

[645] *See supra* Section II.B.8.c. for a discussion of proposed Rules 6a–5(n)(5) and 15Aa–3(n)(5).

[646] *See* proposed Rules 6a–5(o)(5) and 15Aa–3(o)(5).

[647] *See supra* Section II.B.5. for a discussion of proposed Rules 6a–5(l)(2) and 15Aa–3(l)(2).

[648] At the time that the Commission approved BOX as a trading facility of BSE, Interactive Brokers Group LLC (a registered broker-dealer) owned more than a 20% interest in BOX. *See* Securities Exchange Act Release No. 49067, *supra* note 59. Also, at the time the Commission approved a PCX rule filing relating to the IPO of Archipelago Holdings, one member of PCX held both an equity trading permit issued by PCX Equities and more than a 20% interest in Archipelago Holdings. *See* Securities Exchange Act Release No. 50170, *supra* note 65.

[649] *See supra* Section II.B.10. for a discussion of the proposed code of conduct and ethics and governance guidelines.

case, little or no costs would be incurred. However, other exchanges or associations may be required to utilize in-house staff or hire legal counsel to draft such codes or guidelines. The Commission requests comment on the extent to which exchanges and associations already have codes and guidelines that comply with the proposed rules.

3. Request for Comment

The Commission generally requests comment as to whether the operation of proposed Rules 6a–5 and 15Aa–3 would result in the potential costs discussed above, and how to quantify these potential costs. In addition, the Commission requests data to quantify the costs and benefits described above. The Commission seeks estimates of these costs and benefits, as well as any costs and benefits not already defined, which may result from the adoption of these proposed new rules.

B. Costs and Benefits of Proposed Regulation AL

As discussed above, the listing of securities issued by an SRO, the facility of an SRO, or an affiliate of either (''affiliated securities'') on the SRO raises questions as to the SRO's ability to independently and effectively enforce its rules against itself.[650] For instance, the SRO might be reluctant to vigorously monitor for compliance with its initial and continued listing rules by the securities of an affiliated issuer or its own securities, and may be tempted to allow its own securities, or the securities of an affiliate, to be listed (and continue to be listed) on its market even if the security is not in full compliance with the SRO's listing rules. The trading of securities of an SRO or the securities of an affiliated issuer on the SRO also raises similar potential conflict concerns, in that the SRO might choose to selectively enforce (or not enforce) its trading rules with respect to trading in its own stock or that of an affiliate so as to benefit itself. For example, the SRO may determine to look the other way with respect to improper trading in an affiliated security that creates the appearance of increased volume, such as through wash sales, or trading that artificially inflates or sustains the price of the stock, such as marking the close.

Proposed Regulation AL would prohibit an exchange or association from approving for listing an affiliated security unless such exchange's or association's Regulatory Oversight Committee (composed of independent directors) certified that such security satisfies the exchange's or association's rules for listing.[651] Proposed Regulation AL also would impose reporting and notice requirements on an exchange or association with respect to an affiliated security.[652] Specifically, an exchange or association would have to file quarterly reports with the Commission regarding its monitoring of the listing and trading of an affiliated security on its market; on an annual basis provide the Commission a copy of a report prepared by a third party analyzing compliance by the affiliated security with the exchange's or association's listing rules; promptly notify an affiliated issuer of alleged non-compliance with a listing rule; provide the Commission with a report detailing such alleged non-compliance; and provide the Commission with a copy of any response from the affiliated issuer.[653] The exchange's or association's Regulatory Oversight Committee would have to approve the quarterly reports and the report detailing non-compliance.

1. Benefits

The Commission believes that requiring an exchange's or association's Regulatory Oversight Committee to have a role in monitoring compliance with the exchange's or association's rules with regard to an affiliated security would reduce the potential for conflict between an exchange's or association's self-regulatory responsibility to vigorously oversee the listing and trading of the affiliated security on its market, and its own commercial or economic interests. In particular, requiring the Regulatory Oversight Committee—a fully independent committee—to certify that an initial listing of an affiliated security satisfies the listing rules would bring a level of independence to the process. Also, requiring the Regulatory Oversight Committee to approve the quarterly reports and reports detailing non-compliance prior to filing with the Commission would serve to bring independent oversight to the ongoing monitoring process, and provide the Regulatory Oversight Committee with timely notice of potential concerns. In addition, the Commission believes that requiring a third party to analyze compliance with listing rules would serve to add an additional layer of impartiality to the oversight process. Regulation AL also would require the exchange or association to apply its listing rules to affiliated securities in a manner that is not materially different than the treatment afforded to other securities listed on the exchange or association, and that any action taken by the exchange or association with respect to listing and trading of an affiliated security be in compliance with the rules of the exchange or association. The Commission believes that these steps would help to address the potential conflict of interest, which would benefit investors and the market generally by helping to prevent fraud and manipulation and by helping to ensure that the exchange or association does not give preferential treatment to affiliated securities.

2. Costs

Each exchange or association already should have in place established policies and procedures for monitoring the listing and trading of securities on or through its facilities.[654] The Commission believes that the monitoring of the listing and trading of an affiliated security should fall within these existing procedures, thus minimizing costs necessary to monitor the listing and trading of an affiliated security's compliance with proposed Regulation AL.

The Commission recognizes that each exchange or association that lists an affiliated security could incur costs associated with a more frequent review for compliance with listing rules if the exchange or association does not perform such review at least once a quarter. As stated above in Section IX., the Commission estimates that an exchange or association that does not review for compliance on a quarterly basis would incur an additional reporting and recordkeeping burden of 8 hours per review, and further estimates that two additional reviews per year would be required. The Commission's preliminary belief, however, is that each exchange and association already performs some level of review for compliance with its listing rules on at least a quarterly basis. The Commission requests comment on this issue.

In addition, the exchange or association could incur costs associated with requiring the Regulatory Oversight Committee to certify the initial listing of the affiliated security, and to approve each quarterly and any non-compliance reports, because the Committee would need time to review the listing rules and reports. An exchange or association also would incur in-house legal, compliance

[650] *See supra* Section III. for a discussion of proposed Regulation AL.

[651] *See* proposed Rule 800(b)(1).

[652] *See* proposed Rule 800(b)(2)

[653] *See id.*

[654] The Commission notes that an exchange or association only would incur costs necessary to comply with proposed Regulation AL if it approved for listing an affiliated security that is to be traded on or through its facilities.

and administrative costs related to preparing and filing quarterly reports with the Commission and, if an exchange or association were to allege that an affiliated security was not in compliance with listing rules, with preparing and filing a report with the Commission detailing such alleged non-compliance.[655] As discussed above in Section IX., the Commission estimates that each exchange or association would spend approximately 17 hours preparing and filing the initial quarterly report and 12 hours for each quarterly report thereafter, for a total of 53 hours per exchange or association for the first year and 48 hours per exchange or association thereafter. Additionally, the Commission estimates that each exchange or association would spend approximately 5 hours to prepare and file a non-compliance report, 2 hours to notify an issuer of alleged non-compliance, 2 hours to comply with the proposed requirement to file a copy with the Commission of a response to any issuer that notifies the exchange or association of alleged non-compliance and $1.29 [656] each time the exchange or association notifies an issuer of alleged non-compliance, files a report with the Commission, sends notice of non-compliance to an issuer or files a copy with the Commission of any notice of non-compliance. The Commission is not able to estimate how many non-compliance reports would need to be filed, how many times an exchange or association would need to notify an issuer of non-compliance, and how many times an exchange or association would need to file a copy with the Commission of any response to any issuer that notifies the exchange or association of its non-compliance, but estimates that one occurrence of each such event per exchange or association would occur each year. Accordingly, the Commission estimates that each exchange or association would spend 9 hours per year and $3.87, for a total of 81 hours and approximately $35 for all exchanges and associations.

In addition, the exchange or association would incur the costs of hiring a third party to analyze and prepare a report regarding the affiliated security's compliance with the exchange's or association's listing rules on an annual basis.[657] The Commission also estimates that an exchange or association would spend approximately 9 hours reviewing and participating in the preparation of such third party reports. As discussed above in Section IX., the Commission preliminarily estimates that it would take a third party approximately 22 hours to prepare and file each report, for a total annual cost per exchange or association of approximately $6,612, or $59,508 annually for all exchanges and associations.

3. Request for Comment

The Commission seeks comment on any additional benefits of proposed Regulation AL. The Commission also generally requests comment as to whether the operation of the proposed rule would result in the potential costs discussed above, and how to quantify these potential costs. The Commission also seeks comment on any additional anticipated costs and benefits of the proposed rule, including specifics of the dollar amount of such cost or benefit impact.

C. Costs and Benefits of Proposed Rule 6a–2 and Revised Form 1, and Rule 15Aa–2 and New Form 2

The Commission proposes to amend the procedures for application as a national securities exchange (or exchange exempt from registration based on limited volume) or registered securities association (or affiliated securities association), and for the submission of amendments to such applications. In addition, the proposals would harmonize the disclosure requirements for exchanges and associations.

Under the proposals, an applicant for registration as a national securities exchange or an exchange exempt from registration pursuant to Section 5 of the Exchange Act,[658] or as a registered securities association or an affiliated securities association, would be required to submit a registration statement and provide disclosure to the Commission on revised Form 1 (for exchanges) or new Form 2 (for associations).[659] Any exchange or association that is registered with the Commission as of the publication date of adoption of any proposed amendments to the forms would be required to file a complete registration statement on revised Form 1 or new Form 2, as applicable, within six months following such publication date. Exchanges and associations also would use revised Form 1 and new Form 2, respectively, to submit amendments. An exchange or association further would be required to comply with proposed amendments to Rule 6a–2 [660] and revised Form 1, and proposed Rule 15Aa–2 and new Form 2, on behalf of any facility that is a separate legal entity [661] or any regulatory subsidiary of the exchange or association with respect to the filing of specified Exhibits.[662] The term ''regulatory subsidiary'' would mean any person that, directly or indirectly, is controlled by the exchange or association and that provides, whether pursuant to contract, agreement or rule, regulatory services to or on behalf of the exchange or association.[663]

The Commission's proposals would require the disclosure of greater information about exchanges and associations, particularly with respect to their governance and organizational structure, their regulatory programs, and significant ownership of the exchange or association or facility of the exchange or association.[664] Under the Commission's proposals, certain Exhibits to the current Form 1 (exchanges) would be revised to require more detailed disclosures; comparable disclosures would be required pursuant to Form 2 (associations). These revised Exhibits

[655] The exchange or association may also incur outside legal costs, to the extent they choose to outsource the preparation of these reports. The Commission does not believe it likely that an exchange or association would outsource the preparation of these reports, but requests comment on the issue.

[656] The Commission assumes that each report and notification will weigh five ounces and will be mailed via first class mail at a rate of $0.37 for the first ounce and $0.23 for each additional ounce, for a total of $1.29.

[657] The Commission believes that most, if not all, exchange and association listing rules include fairly objective quantitative (*e.g.* market capitalization) and qualitative (*e.g.* that the majority of the board be independent) listing standards. For example, *see* Sections 1 and 3 of the NYSE *Listed Company Manual* and Rules 4300, *et seq.*, of the NASD Manual.

[658] 15 U.S.C. 78e.

[659] Currently, securities associations are required to register on Form X–15AA–1 and to file amendments and supplements on Forms X–15AJ–1 and X–15AJ–2. The Commission proposes to redesignate Form X–15AA–1 as Form 2 and to amend Form 2 in a manner consistent with the proposals contained in this release. For clarity, we refer to the registration form for exchanges, as proposed to be amended, as ''revised Form 1'' and the registration form for securities associations, as proposed to be redesignated and amended, as ''new Form 2.''

[660] 17 CFR 240.6a–2.

[661] The term ''facility'' when used with respect to an exchange would have the same meaning as in Section 3(a)(2) of the Exchange Act. 15 U.S.C. 78c(a)(2). The term ''facility'' when used with respect to an association is defined in proposed Rule 15Aa–3(b)(11).

[662] The proposed Exhibits to revised Form 1 and new Form 2 for which an exchange or association would need to include information with respect to a facility or regulatory subsidiary are Exhibits A (governance documents and rules), B (written rulings, interpretations), C (composition, structure and responsibilities of the board), D (list of officers), E (information about executive board and committees), F (governance guidelines, code of conduct and ethics (and waivers), G (internal organizational charts), H (regulatory program), and I (financial information).

[663] *See* proposed Instructions to revised Form 1 and new Form 2.

[664] *See supra* Section IV.

would pertain to information about the officers of exchanges and associations;[665] a description of the structure, composition, and responsibilities of any executive board and each committee;[666] financial information, including an itemization of revenues and expenses;[667] the ownership interest of any exchange, association, or facility of an exchange or association, and information on persons owning more than 5% of such ownership interest;[668] and information about securities listed or traded on the SRO or on any SRO trading facility.[669] In addition, the Commission is proposing to add several new Exhibits to the current Form 1 and to incorporate those Exhibits in new Form 2. These Exhibits would pertain to the composition, structure, and responsibilities of the board;[670] the governance guidelines, code of conduct and ethics (and waivers thereof),[671] and the method established by the exchange or association for interested parties to communicate their concerns regarding any matter within the authority or jurisdiction of a Standing Committee directly to independent directors;[672] the organizational structure of the exchange or association;[673] the regulatory program of the exchange or association;[674] the relationship between and among the exchange (or association), any facility of an exchange (or association), and any affiliate of the exchange (or association) or facility of the exchange (or association);[675] and the location of the exchange's or association's books and records.[676]

One of the most significant proposed features is the requirement that exchanges and associations provide more in-depth disclosures about their regulatory programs and a breakdown of the revenues and expenses associated with those programs. Exchanges and associations would need to provide a description of their regulatory programs (and those of any regulatory subsidiary). The description would include information concerning member firm regulation, market surveillance, enforcement, listing qualifications, arbitrations, rulemaking and interpretation, and the process for assessment and development of regulatory policy. Exchanges and associations would be required to provide a copy of any delegation plan or other contract or agreement relating to regulatory services that are provided or will be provided to the exchange or association by another SRO, a regulatory subsidiary, or a regulatory subsidiary of another SRO. Exchanges and associations also would be required to describe fully the method established by the board for interested parties to communicate their concerns regarding any matter within the authority or jurisdiction of a Standing Committee directly to independent directors.[677]

Further, revised Form 1 and new Form 2 would require the exchange or association to provide a description of the structural or functional independence of the regulatory program from the market operations and other commercial interests of the exchange or association, and to discuss fully any significant regulatory issues that have arisen or any significant events that have taken place in the past year and the effect these significant issues or events may have on the mission, strategy, and future operations of the exchange's or association's regulatory program.[678]

In addition, the proposals would require exchanges and associations to disclose their regulatory expenses as a proportion of their total budget, and separately as a proportion of their total annual revenues. Pursuant to this provision, exchanges and associations would be required to disclose the aggregate amounts that they expend on regulatory activities, as well as the amounts that they expend on certain subcategories of regulatory activities, including supervisory activities (*e.g.*, routine examinations and oversight of member activity conducted in the regular course of business), surveillance activities (*e.g.*, manual and automated surveillance to ensure compliance with rules, such as trading rules and financial responsibility rules), and disciplinary activities (*e.g.*, enforcement activities). Revised Form 1 and new Form 2 also would require exchanges and associations to disclose the dollar amount of their revenues and expenses of their regulatory programs, with detailed itemization within the following broad categories: revenues; direct expenses; and allocated expenses. Exchanges and associations would provide this information for each area of their regulatory programs, such as surveillance, supervision, and discipline, and provide aggregate data for all program areas.[679]

Further, the proposals would require exchanges and associations to amend Form 1 and Form 2 closer in time to the occurrence of an event that requires amendment.[680] The Commission also is proposing to require that each exchange and association prepare annually an updated Form 1 or Form 2, as applicable,[681] and continuously post its most recent form and any subsequent amendments on a publicly accessible Internet Web site controlled by the exchange or association.[682] The proposed amendments would give exchanges and associations the option of complying with the annual filing requirements for specified Exhibits by posting the required information on an Internet Web site and certifying that the posted information is accurate.[683]

1. Benefits

By requiring that national securities exchanges (and exchanges exempted from registration based on limited volume) and registered securities associations (and affiliated securities association) to provide equivalent information on revised Form 1 (exchanges) and new Form 2 (associations), the Commission expects that the proposals would benefit an exchange's or association's members, users of their facilities, institutional and retail investors, and the shareholders or other owners of the exchange or association, as well as the Commission, by providing them with access to more frequent and more detailed information about aspects of exchanges' and associations' governance and organizational structures, their regulatory programs, and their significant owners. Further, the proposals are intended to align the

[665] *See* proposed Exhibit D to revised Form 1 and new Form 2.

[666] *See* proposed Exhibit E to revised Form 1 and new Form 2.

[667] *See* proposed Exhibit I to revised Form 1 and new Form 2.

[668] *See* proposed Exhibit Q to revised Form 1 and new Form 2.

[669] *See* proposed Exhibit T to revised Form 1 and new Form 2. The term ''SRO trading facility'' would mean any facility of a national securities exchange or registered securities association that executes orders in securities. *See* proposed Instructions to revised Form 1 and new Form 2.

[670] *See* proposed Exhibit C to revised Form 1 and new Form 2.

[671] *See* proposed Exhibit F to revised Form 1 and new Form 2.

[672] *See* proposed Exhibit C to revised Form 1 and new Form 2.

[673] *See* proposed Exhibit G to revised Form 1 and new Form 2.

[674] *See* proposed Exhibit H to revised Form 1 and new Form 2.

[675] *See* proposed Exhibit P to revised Form 1 and new Form 2.

[676] *See* proposed Exhibit U to revised Form 1 and new Form 2.

[677] *See* proposed Exhibit C to revised Form 1 and new Form 2.

[678] *See* proposed Exhibit H to revised Form 1 and new Form 2.

[679] *See* proposed Exhibit I to revised Form 1 and new Form 2.

[680] *See* proposed Rules 6a–2(a) and 15Aa–2(a).

[681] *See* proposed Rules 6a–2(b) and 15Aa–2(b).

[682] *See* proposed Rules 6a–2(c) and 15Aa–2(c).

[683] *See* proposed Rules 6a–2(d) and 15Aa–2(d).

regulatory disclosure framework for exchanges and associations by mandating comparable disclosure requirements for both types of SROs, particularly as they are charged with nearly identical obligations under the Exchange Act.[684] The Commission also believes that disclosure of information with respect to the facility or regulatory subsidiary of an exchange or association would provide benefits to investors, market participants, and others by providing a more accurate and complete overview of the structure and governance of an SRO.

In the Commission's view, the proposed amendments to Rule 6a–2 and new Rule 15Aa–2, along with revised Form 1 and new Form 2, should bring a much greater degree of transparency to the administration, organization, governance, and ownership of exchanges and associations than currently exists. The Commission and the public would have access to more detailed information about the board members, officers, and committee members of exchanges and associations; the structure, composition, and responsibilities of the board, executive board, and each committee; financial information, including an itemization of revenues and expenses; the ownership interest of any exchange, association, or facility of an exchange or association, and information on persons owning more than 5% of such ownership interest; and information about securities listed or traded on the SRO or on any SRO trading facility. In addition, the Commission and the public would be able to obtain information about the governance guidelines, waiver of the code of conduct and ethics, and method by which interested parties may communicate concerns to independent directors with respect to a Standing Committee; the organizational structure of the exchange or association; the regulatory program of the exchange or association; the relationship between and among the SRO, its facilities, and any affiliate of the SRO or a facility of the SRO; and the location of the exchange's or association's books and records.

These enhanced disclosure requirements would enable a wide range of individuals and entities, including members of exchanges and associations, users of their facilities, institutional and retail investors, other market participants, shareholders and other owners of demutualized exchanges or facilities and the public generally, as well as regulators, to have access to important information about exchanges and associations. Such specific, detailed disclosure requirements would further the goal of providing market participants, investors, and the public generally with disclosures by SROs that present a greater degree of clarity and transparency. As SROs, exchanges and associations are accorded a public trust to oversee their markets and members and to protect investors and the public interest. The proposed disclosure requirements are intended to shed more light on those aspects of an SRO that are central to its carrying out its obligations under the Exchange Act.[685] Thus, the proposed disclosure requirements should enhance investors' confidence in the fairness and integrity of the securities markets by requiring exchanges and associations to provide specific disclosures about their governance and administration.

The proposed disclosure requirements also should benefit exchanges and associations because they would require these SROs to periodically focus on their governance structures and regulatory programs, as well to identify their significant owners, when they prepare the annual updates to Forms 1 and 2. Moreover, the proposals would provide the Commission with access to a stream of important information about exchanges and associations that could be used for oversight purposes. For instance, requiring an SRO to report on persons that own more than 5% of the SRO or its facilities would serve to focus the SRO's attention on persons who accumulate significant interests. SROs could use this information to assess the ability of those persons to affect the operation of the SRO and its performance of its regulatory responsibilities. Providing detailed information regarding significant owners of the SRO or its facilities to the Commission, investors, members, and users of an SRO's facilities should help ensure greater accountability on the part of the exchange to monitor for undue influence or control of its regulatory and commercial operations, as well as further the ability of the Commission to carry out its oversight responsibilities over the SRO.

The Commission believes that requiring those exchanges and associations that are registered with the Commission as of the date of publication in the **Federal Register** of adoption of any proposed amendments to the forms to file a complete registration statement on revised Form 1 or new Form 2 within six months following such publication date would establish a baseline for all registered exchanges and associations and would facilitate bringing such exchanges and associations into the disclosure process as proposed to be revised. In addition, the Commission's proposal to require more frequent updates of amendments to revised Form 1 and new Form 2, and to post recent versions of the forms on a publicly accessible Internet Web site in lieu of paper filing, should benefit investors, market participants, and the Commission. The proposed amendments should enhance investor confidence in the integrity of the markets by requiring exchanges and associations to provide more regular and up-to-date disclosures about significant changes in their governance, regulation, administration, and significant ownership. The Commission expects that posting the most recent version of completed Form 1 or Form 2 on an Internet Web site would make such information more readily accessible to both the Commission and the public, thereby enhancing the transparency of each exchange and association. Web site disclosure should assist market participants and the public in their understanding and awareness of significant aspects of these SROs. Moreover, SRO members, market participants, investors and regulators would be able to more easily monitor the effectiveness and performance of SROs, thus helping to promote greater accountability by SROs with their Exchange Act obligations.

Finally, the Commission believes that the proposed elimination of Forms X–15AJ–1 and X–15AJ–2 and the proposed use of Form 2 as both the application for initial registration as a registered securities association or affiliated securities association, and the form for submitting amendments to the initial application, would provide for more uniform disclosure requirements for exchanges and associations than the existing regulatory scheme. The Commission believes that more closely aligning the disclosure requirements for exchanges and associations would benefit the Commission and the public, particularly in light of the fact that the Exchange Act imposes comparable requirements on these SROs. The Commission requests comment on the benefits of its proposals to increase disclosure on revised Form 1 and new Form 2.

2. Costs

The Commission anticipates that the additional disclosure requirements contained in the proposals, and the proposed requirements for more

[684] *See* Sections 6 and 15A of the Exchange Act, 15 U.S.C. 78f and 78*o*–3.

[685] *See* Sections 6(b) and 15A(b) of the Exchange Act, 15 U.S.C. 78f(b) and 78*o*–3(b).

frequent filing, would impose costs on exchanges and associations in terms of additional staff time dedicated to recordkeeping, the obtaining and compilation of data, annual preparation and internal review of revised Form 1 and new Form 2, respectively, and periodic amendments to the applicable form. However, much of the required information should be readily available to the boards of exchanges and associations and management of these SROs, particularly with respect to matters relating to governance structure. The Commission anticipates, however, that an exchange or association would incur greater costs in the first year or two after adoption of the proposals than in subsequent years. This is in part because the exchange or association would incur costs as it becomes familiar with the new requirements and sets up the mechanisms and internal procedures to collect and provide the information required by the forms' Exhibits, particularly the information relating to ownership of the exchange, association or a facility of either. Once these systems have been established, the Commission anticipates that the cost to maintain them would be relatively low. Under the proposed implementation schedule, the requirement that exchanges and associations that are registered with the Commission as of the publication date of adoption of any proposed amendments to the forms submit an initial complete revised Form 1 or new Form 2 from within six months following such publication date also would impose a higher initial cost on such exchanges and associations in the first year after the adoption of the proposals. A registered exchange or association, whose fiscal year ends after the final date by which such initial complete revised Form 1 or new Form 2, as applicable, must be submitted before the end of the calendar year in which such initial complete form is submitted, would incur higher costs in that first year because it also would be required to file an annual amendment in the same year as it submits the initial complete revised Form 1 or new Form 2, as applicable. The Commission believes that this is a necessary and justified cost, however, in order to bring currently registered exchanges and associations into the disclosure process, as proposed to be revised.

As discussed above in Section IX, Commission staff believes that exchanges and associations would incur some costs in gathering the documentation to comply with the proposed rule and form amendments. The Commission believes the initial paperwork burdens for an exchange or association filing an initial registration statement is estimated to be 157 hours per applicant. The yearly ongoing paperwork burdens for an exchange or association that has been approved for registration is estimated to be 48 hours per SRO.

The Commission also believes that those exchanges and associations that are registered with the Commission as of the publication date of adoption of any proposed amendments to the forms, and thus would need to file a complete registration on revised Form 1 or new Form 2 no later than six months following such publication date would incur a paperwork burden of 157 hours per exchange or association for the complete revised Form 1 or new Form 2, plus an additional 20 hours if an annual amendment is required within the same calendar year. The yearly ongoing paperwork burden for each such exchange or association would be 48 hours. As a result, these exchanges and associations could have to file a completed registration form twice within a twelve month period. An exchange or association also would incur costs in the mailing of paper filings and copies to the Commission. The Commission estimates that the costs of mailing an initial application on revised Form 1 or new Form 2 would be $673.33 per exchange or association.[686] The costs of filing a complete registration statement on revised Form 1 or new Form 2 no later than six months following the final rules' publication date is also estimated by the Commission to be $673.33 per exchange or association.[687] The Commission estimates that the costs of mailing an amendment to revised Form 1 or new Form 2 would be $365.86 per exchange or association.[688] We request comment on the costs associated with this implementation proposal.

As discussed in Section IX., for PRA purposes, the Commission estimates that total reporting and recordkeeping burden for an exchange that submits an initial registration or exemption application on the revised Form 1 would be 157 hours and $673.33 per applicant.[689] For exchanges that are already registered with the Commission, the estimated reporting and recordkeeping burden for filing a complete revised Form 1 and any requisite updating amendments for the first year in which the final rules' are published would be 177 hours and approximately $1,039 per exchange. Thus, the Commission estimates that the total recordkeeping and reporting burden for all nine registered exchanges for the first year in which the final rules' are published would be 1,593 hours and approximately $9,351. After the year in which an exchange initially files the revised Form 1, the Commission estimates that such exchange would bear an annual reporting and recordkeeping burden of 48 hours and $731.72, and that all exchanges would bear a total annual reporting and recordkeeping burden of 432 hours and approximately $6,585.

The Commission estimates that total reporting and recordkeeping burden for an association that submits an initial registration application on the new Form 2 would be 157 hours and $673.33 per applicant.[690] For associations that are already registered with the Commission, the estimated reporting and recordkeeping burden for filing a complete new Form 2 and any requisite updating amendments for the first year in which the final rules' are published would be 177 hours and approximately $1,039 per association. Thus, the Commission estimates that the total recordkeeping and reporting burden for the one registered association for the first year in which the final rules' are published would be 177 hours and approximately $1,039. After the year in which an association initially files the new Form 2, the Commission estimates that such association would bear an annual reporting and recordkeeping burden of 48 hours and $731.72.

Revised Form 1 and new Form 2 would require that exchanges and associations provide copies of certain documents to the Commission. For example, exchanges and associations would be required to provide a copy of the constitution and other governing documents, and a copy of all written rulings and interpretations.[691] Exchanges and associations also would be required to provide a copy of the written charter for each Standing

[686] The Commission estimates that an initial application and copies would weigh approximately 180 lbs, and would be mailed via courier/shipping service.

[687] *See supra* note 686.

[688] The Commission estimates that an amendment and copies would weigh approximately 60 lbs, and would be mailed via courier/shipping service.

[689] This total includes the burden of preparing and submitting the initial registration form, but does not include any initial start-up burden for creating a website (this is a burden on which the Commission is soliciting comments).

[690] This total includes the burden of preparing and submitting the initial registration form, but does not include any initial start-up burden for creating a website (this is a burden on which the Commission is soliciting comments).

[691] *See* proposed Exhibits A and B of revised Form 1 and new Form 2.

Committee.[692] In addition, exchanges and association would be required to submit a copy of the governance guidelines, code of conduct and ethics,[693] and copy of the procedures for interested persons to communicate concerns regarding matters within the jurisdiction or authority of a Standing Committee to independent directors.[694] Copies of delegation plans or other agreement relating to regulatory services provided to the exchange or association,[695] membership applications,[696] forms of financial statements, reports or questionnaires relating to financial responsibility or minimum capital requirements,[697] and listing applications [698] also would be required to be provided on revised Form 1 and new Form 2. The Commission believes that exchanges and associations already maintain these documents, and should only incur mailing costs, as discussed earlier.[699] The Commission, however, requests comment on whether exchanges and associations currently retain such documents.

However, other Exhibits to Forms 1 and 2 would require the exchange or association, respectively, to provide charts detailing aspects of its governance structure and internal organizational structure, as well as the relationship among the exchange, association, its facilities, and any affiliates.[700] If the exchange or association currently does not prepare such charts, it would incur costs in preparing these charts. The exchange or association also must provide a table indicating the compensation of the five most highly compensated executives.[701] The Commission does not expect that exchanges and associations would incur significant costs in preparing such charts or tables as this information is readily available to them. The Commission requests comment on the costs associated with the preparation of charts or tables in compliance with revised Form 1 and new Form 2.

Exchanges and associations also would be required to provide more detailed information regarding their regulatory programs, including revenues and expenditures related to those regulatory programs.[702] Exhibit H to revised Form 1 and new Form 2 would require exchanges and associations to provide a description of all of their regulatory programs. Further, Exhibit H would require a description of the structural independence of the regulatory program from market operation and other commercial interests of the exchange or association. Exchanges and associations would be required to discuss any significant changes that are planned for their regulatory programs. In addition, each exchange and association would be required to discuss fully any significant regulatory issues that have arisen or any significant events that have taken place in the past year, that relate to or otherwise may affect the exchange's or association's regulatory responsibilities or the operation of its regulatory program. Exhibit H also would require exchanges and associations to discuss the effect that these significant issues or events may have on the mission, strategy, and future operations of the exchange's or association's regulatory program.[703] An exchange or association would be likely to incur costs with regard to the description and discussion of the specified aspects of regulatory program that is necessary for compliance with proposed Exhibit H to revised Form 1 and new Form 2. The Commission requests comment on the costs of compliance with this proposal. The Commission further requests comment on whether the SRO would be likely to incur costs related to hiring and compensating outside counsel or consultants to aid in completing the description and discussion of specific aspects of the exchange's or association's regulatory program.

Revised Form 1 and new Form 2 would require exchanges and associations to submit audited financial statements. This requirement is contained in the current Form 1 and the Commission believes that there should not be significant new costs associated with providing audited financial statements. The Commission requests comment on the costs associated with the preparation and filing of audited financial statements in accordance with revised Form 1 and new Form 2.

Exchanges and associations would be required to disclose their regulatory expenses as a proportion of their total budget, and separately as a proportion of their total annual revenues. Pursuant to proposed Exhibit I to revised Form 1 and new Form 2, exchanges and associations would be required to disclose the aggregate amounts that they expend on regulatory activities, as well as the amounts that they expend on certain subcategories of regulatory activities, including supervisory activities, surveillance activities, and disciplinary activities. Revised Form 1 and new Form 2 also would require exchanges and associations to disclose the dollar amount of their revenues and expenses for each area (*e.g.*, surveillance, supervision, and discipline) of their regulatory programs, with detailed itemization within the following broad categories: revenues; direct expenses; and allocated expenses.[704] The Commission believes that the SROs currently track and maintain records of this financial information and that the costs of compliance with revised Form 1 and new Form 2 therefore would not be substantial. The Commission requests comment on the costs of compiling information about their regulatory revenues and expenses.

Exchanges and associations also would be required to provide an itemization of their non-regulatory expenditures, including, but not limited to, personnel expenses, program expenses, systems and other technology expenses, consultants and advisors, and overhead.[705] The Commission believes that the SROs currently track and maintain records of this financial information and that the costs of compliance with revised Form 1 and new Form 2 therefore would not be substantial. The Commission requests comment on the costs of compiling information about their non-regulatory expenditures.

Exchanges and associations also would be required to disclose all charitable contributions of the exchange or association (whether made directly or indirectly) in excess of $1,000 to a charity in which an executive officer or director of the applicant, or any of their immediate family members, is an executive officer or director of the

[692] *See* proposed Exhibit E of revised Form 1 and new Form 2.

[693] *See* proposed Exhibit F of revised Form 1 and new Form 2.

[694] *See* proposed Exhibit C of revised Form 1 and new Form 2.

[695] *See* proposed Exhibit H of revised Form 1 and new Form 2.

[696] *See* proposed Exhibit M of revised Form 1 and new Form 2.

[697] *See* proposed Exhibit N of revised Form 1 and new Form 2.

[698] *See* proposed Exhibit O of revised Form 1 and new Form 2.

[699] Moreover, as discussed below, the costs of filing some of the exhibits should be further reduced for exchanges and associations that choose to comply by posting specified Exhibits on an Internet Web site. *See* proposed Rules 6a–2(d) and 15Aa–2(d).

[700] *See* proposed Exhibits E, G, and P of revised Form 1 and new Form 2.

[701] *See* proposed Exhibit I of revised Form 1 and new Form 2.

[702] *See* proposed Exhibits H and I of revised Form 1 and new Form 2.

[703] *See* proposed Exhibit H to revised Form 1 and new Form 2.

[704] *See* proposed Exhibit I to revised Form 1 and new Form 2.

[705] *See* proposed Exhibit I to revised Form 1 and new Form 2.

charity.[706] Exchange and associations would incur costs in obtaining this financial information. The Commission requests comment on the costs of compiling information about charitable contributions of the exchange or association. The Commission further requests comment on whether SROs currently obtain information about charitable contributions from officers, directors, and their immediate family members. Commenters also are asked to comment on the ease by which an SRO could obtain information regarding charitable contributions required to be disclosed on revised Form 1 and new Form 2.

Further, under proposed Exhibit I, the exchange or association would have to incorporate a discussion of any unusual or infrequent events or transactions or any significant economic changes that have had a material effect on the financial condition of the exchange or association, and any known demands, commitments, events or uncertainties that would result in or are reasonably likely to result in a material change in financial condition. Proposed Exhibit I also would require a description of any significant business development involving the exchange or association, including a reorganization, merger or consolidation, acquisition or disposition of significant assets, or any other material change in business or operations.[707] An exchange or association is likely to incur costs with regard to the staff and board analysis and internal discussion of such events and changes that is necessary for compliance with proposed Exhibit I to revised Form 1 and new Form 2. The Commission requests comment on the costs of compliance with this proposal. The Commission further requests comment on whether the SRO would be likely to incur costs related to hiring and compensating outside counsel or consultants to aid in completing the requirements of proposed Exhibit I.

In addition, proposed Exhibit I would require exchanges and associations to describe all material contracts and all material related party transactions. Further, Exhibit I would require a description of the material commitments of the exchange or association for expenditures as of the end of the latest fiscal period, and indicate the general purpose of such commitments and the anticipated source of funds needed to fulfill such commitments.[708] SROs would incur costs to track and maintain records of this financial information. The Commission requests comment on the costs of compiling information about their material contracts and material related party transactions. The Commission further requests comment on whether SROs currently maintain records of their material contracts and related party transactions, and, if not, the ease of with which an SRO could obtain such information.

Finally, proposed Exhibit I would require a description of the material terms of the employment agreements of the five most highly compensated executives of the exchange or association and would require the exchange or association to provide a description of the compensation provided to members of its board.[709] The Commission believes that the SROs currently track and maintain records of their compensation agreements with executives and that the costs of compliance would therefore not be substantial. The Commission requests comment on the costs of compiling information about employment agreements with the five most highly compensated executives of the exchange or association.

Overall, the Commission requests comment as to the types of records exchanges and associations presently maintain with respect to their budgets, revenues, and expenses, and, in particular, the revenues and expenses associated with their regulatory programs. Further, the Commission recognizes that exchanges and associations, would incur costs in the first year or two in setting up the format for disclosing revenues and expenditures according to the categories set forth in proposed Exhibit I to Forms 1 and 2, and in becoming familiar with the format. The Commission seeks comment on the costs that would be incurred by an exchange or association in preparing the proposed financial data contained in proposed Exhibit I according to the categories set forth therein.

Proposed Exhibit Q to revised Form 1 and new Form 2 would require the exchange or association to disclose detailed information regarding direct and indirect significant (more than 5%) owners of the exchange or association or a facility thereof. Although an exchange or association may already collect or have access to some of this information, it is likely that it would incur costs associated with putting in place a process to obtain more detailed information, both in terms of the type of ownership information (*e.g.*, number of shares, contracts relating to ownership) and the scope of persons whose ownership interest must be aggregated together (*e.g.*, a person's interest must be aggregated with any of its ''related persons'' ''its affiliates, associated persons, and immediate family members). Facilities of the exchange or association also may incur costs associated with obtaining and providing ownership information to the exchange or association. The Commission believes that these costs would likely be more in the first year or two as the exchange, association or facility becomes familiar with the process, but recognizes that there would be ongoing costs to continually obtain this information. The Commission requests comment on the accuracy of this view and on the specific costs of obtaining and providing such detailed ownership information pursuant to revised Form 1 and new Form 2. The Commission further requests comment on the ease or difficulty an SRO would encounter to obtain all the information required to be disclosed by proposed Exhibit Q, including information regarding related persons. In addition, commenters are requested to provide information on costs associated with monitoring ownership on an on-going basis, including whether exchanges and associations would have to file a proposed rule change with the Commission to make changes to their rules to allow them to request this information from their or a facility's owners.

The Commission proposes to more closely align the disclosure requirements for exchanges and associations. Currently, associations are not required to provide the same kind of information as exchanges. As a result of the proposed revisions that would require associations to disclose information in a format that is comparable to the one currently used by exchanges, associations likely would incur greater costs to comply with the disclosure requirements of new Form 2 than exchanges would face in complying with revised Form 1. The Commission requests comment on the costs of requiring more uniform registration forms for exchanges and associations.

With limited exceptions,[710] revised Form 1 or new Form 2, and all subsequent amendments thereto, would be required to be filed in paper format with the Commission, as well as posted on a publicly accessible Internet Web site controlled by the exchange or association. The exchanges registered

[706] *See id.*

[707] *See id.*

[708] *See id.*

[709] *See id.*

[710] *See* proposed Rules 6a–2(d) and 15Aa–2(d).

under Section 6(a) of the Exchange Act and the only association registered under Section 15A(a) of the Exchange Act, the NASD, all currently maintain publicly accessible Internet Web sites.[711] Therefore, each exchange and association should incur minimal costs in updating their Internet Web sites to meet the proposed requirements. The Commission seeks comment on these costs.

The Commission recognizes that certain exhibits require information that changes frequently; in addition, the paper involved to prepare those Exhibits could be voluminous. For that reason, the proposed rules provide that with respect to Exhibits A, B, M, N, S, or T, or Items 1–7 of Exhibit L,[712] of revised Form 1 and new Form 2, an exchange or association, in lieu of filing such information on paper, would be required only to identify the Internet Web site it controls where such information is available continuously and to certify to the accuracy of such information as of the date of filing. The Commission, in the future, may consider the feasibility of eliminating the paper filing requirement and permitting the forms and exhibits to be posted on an Internet Web site controlled by the SRO, filed electronically with the Commission or through some other means. The Commission seeks comment on these costs.

3. Request for Comment

The Commission requests data to quantify the costs and benefits associated with its proposals to improve SRO transparency and provide for uniform regulatory treatment of exchanges and associations. The Commission seeks estimates of these costs and benefits, as well as any costs and benefits not already defined, which may result from the adoption of these proposed amendments to Rule 6a–2, new Rule 15Aa–1, revised Form 1, and new Form 2, along with the proposed repeal of Forms X–15AJ–1 and X–15AJ–2. Commenters are requested to provide empirical data and other factual support for their views to the extent possible.

[711] *See supra* note 546 and accompanying text.

[712] These proposed Exhibits to revised Form 1 and new Form 2 would require disclosure of: governance documents and rules (Exhibit A); written rulings and interpretations (Exhibit B); membership forms (Exhibit M); documents relating of financial responsibility or minimum capital requirements (Exhibit N); list of members and other users (Exhibit S); securities listed and traded (Exhibit T); and certain information regarding the manner of operation of an SRO trading facility (Items 1–7 of Exhibit L).

D. Costs and Benefits of Proposed Amendments to Rule 17a–1

The proposed change to Rule 17a–1 would require national securities exchanges, national securities associations, registered clearing agencies and the Municipal Securities Rulemaking Board to keep in the United States at least one copy of all documents required to be kept by Section 17(a)[713] of the Exchange Act and Rule 17a–1 thereunder.[714]

1. Benefits

While the Commission believes that in practice SROs subject to Rule 17a–2 currently keep copies of all documents in the United States, the Commission is concerned that, given the globalization of the securities markets and the trend of SROs to demutualize, there is a greater potential that an SRO may be owned by a non-U.S. entity. By proposing to require that at least one copy of each document is kept in the United States, such documents should be more readily accessible for inspection and examination by the Commission pursuant to Section 17 of the Exchange Act,[715] thus increasing the efficiency and effectiveness of Commission examinations and aiding the Commission's ability carry out its oversight responsibilities. The Commission seeks comment on any additional benefits of the proposed changes to Rule 17a–1.

2. Costs

The Commission preliminarily believes that the proposed changes to Rule 17a–1 would impose minimal costs, if any, on national securities exchanges, national securities associations, registered clearing agencies and the Municipal Securities Rulemaking Board. The Commission believes that the proposed changes to Rule 17a–1 would reflect the current practice of these entities to keep at least one copy of their documents in the United States. To the extent one of these entities currently keeps its documents outside the United States, the Commission preliminarily believes that any storage and staff costs incurred in keeping the documents in the United States would be at least partially off-set by the reduction in storage and staff costs of keeping the documents outside of the United States. The Commission recognizes, however, that such SRO may incur costs to maintain duplicate sets of books and records.

[713] 15 U.S.C. 78q(a).

[714] 17 CFR 240.17a–1. *See supra* Section IV.C.11 for a discussion of the proposed change to Rule 17a–1.

[715] 15 U.S.C. 78q.

3. Request for Comment

The Commission seeks comment on whether there are any additional costs of the proposed change to Rule 17a–1, including specifics of the dollar amount of such cost impact, and whether any national securities exchanges, national securities associations, registered clearing agencies or the Municipal Securities Rulemaking Board currently keeps documents solely outside of the United States. The Commission also requests comment on any additional benefits associated with the proposed change to Rule 17a–1.

E. Costs and Benefits of Proposed Rule 17a–26

The Commission proposes to adopt new Rule 17a–26 under the Exchange Act, which would require every national securities exchange and registered securities association, other than a national securities exchange registered pursuant to Section 6(g) of the Exchange Act[716] and a limited purpose national securities association registered pursuant to Section 15A(k)(l) of the Exchange Act,[717] to file with the Commission, on a quarterly and annual basis, reports that contain the information specified by the rule. The reports would be submitted electronically. Proposed Rule 17a–26 would require exchanges and associations to establish procedures for the preparation of the required reports in a uniform, readily accessible, and usable electronic format.

The quarterly reports would include information with respect to an exchange's or association's surveillance program; complaints received; investigations, examinations, and enforcement cases; and listings information; as well as copies of final agenda from any board or board committee meeting that took place during the quarter.[718] The annual report would contain: (1) An aggregated year-end cumulative summary of specified categories of information regarding the SRO's regulatory program in the quarterly reports; (2) additional updated information on all items that are required to be part of the annual report, including a discussion of regulatory program procedures, the effectiveness of the regulatory program, internal controls addressing conflicts of interest, employment arrangements with senior regulatory personnel, efforts to comply

[716] 15 U.S.C. 78f(g).

[717] 15 U.S.C. 78*o*–3(k)(l).

[718] *See* proposed Rule 17a–26(b)(2).

with undertakings made to the Commission, and copies of the proposed Standing Committee self-evaluations and the annual governance performance evaluation prepared by the Governance Committee; and (3) an independent audit of any electronic SRO trading facility.[719] Finally, exchanges and associations would be required to file a supplement under certain circumstances in order to provide information concerning material changes or material events that affect the SRO's regulatory program.[720]

1. Benefits

Proposed new Rule 17a–26 is intended to enhance the Commission's ability to monitor national securities exchanges' and registered securities associations' compliance with their self-regulatory responsibilities, particularly during the period between inspections by the Commission. The reports filed by these SROs would enable the Commission to monitor, on a routine basis, key aspects of the exchanges' and associations' regulatory programs; assess the SROs' responses to critical issues affecting them; and better target the Commission's inspection resources. Moreover, analysis of information provided in the reports should aid the Commission and SROs in the regulation and evaluation of other regulated entities, such as brokers and dealers. By utilizing the information in the reports, the Commission and SROs would better be able to target their resources to adopt rules to deter violative behavior, or to remove regulation that may be unnecessary.

The Commission also would be able to use the reports to identify compliance trends within and among the exchanges and associations, including trends in exception reports and enforcement activities. The quarterly and annual reports would allow the Commission to monitor for developments, both within a given exchange or association and among the various exchanges and associations, upon which the Commission may be required to act. Thus, proposed Rule 17a–26 would assist the Commission in its efforts to stay abreast of new developments and challenges affecting exchanges and associations, their regulatory programs, their members and investors, and would permit the Commission and its staff to better identify, on a more contemporaneous basis, issues that warrant further investigation or immediate attention. The proposed rule also would assist the Commission by allowing it to utilize its inspection staff and resources more effectively.

The Commission also believes that proposed Rule 17a–26 would provide benefits to exchanges and associations. The proposed rule should have a positive effect on exchange and association compliance practices. For example, the requirement that exchanges and associations obtain an annual audit of the operations of any of their electronic SRO trading facilities would help assure that such facilities are operated in compliance with all applicable legal and regulatory requirements. Given the technological and operational complexity of many electronic SRO trading facilities, the annual audit could help to ensure the integrity of these systems in practice with respect to their proper functioning and regulatory compliance. The Commission would be able to use such information in monitoring SRO compliance with Exchange Act rules and regulations, and SROs could be encouraged to take action on their own initiative to address any regulatory concerns raised by such audit.

In addition, the proposed rule would require exchanges and associations to review, on at least a quarterly basis, the operation and performance of their regulatory programs. In summarizing material and preparing the reports required under the proposed rule, exchanges and associations would benefit by the opportunity to review on a quarterly basis the strengths and weaknesses of their regulatory programs. Exchanges and associations could use the reports to track surveillance and enforcement trends within their regulatory programs, as well as monitor trends in complaints received regarding the operation of their regulatory programs. The Commission expects that the reporting requirements should help exchanges and associations identify potential weaknesses in their compliance practices and surveillance programs, allowing them to update and strengthen their regulatory programs as needed.

The Commission also expects that proposed Rule 17a–26 would encourage exchanges and associations to stress the importance of an active, top-quality compliance program, including thorough and diligent surveillance and enforcement, to their members and to their listed issuers, as well as to the senior management of the exchange or association. The annual and quarterly reports also would be a useful tool to allow the board of the exchange or association, as well as management, to monitor the operation of the exchange's or association's regulatory program over time. Finally, knowledge that SROs are submitting reports on a periodic basis to the Commission on their regulatory programs should contribute to an increased confidence by investors, issuers, and other market participants in the market as a whole.

2. Costs

Proposed Rule 17a–26 would require national securities exchanges and registered securities associations to file quarterly and annual reports with the Commission. As discussed above in Section IX., the Commission believes that exchanges and associations would incur costs to comply with the proposed rule. In particular, based on information available to the Commission at this time, the Commission estimates that each national securities exchange and registered securities association would incur an average burden of 40 hours to prepare each quarterly report and 35 hours to prepare each annual report required by the proposed rule, for an annual burden of 195 hours per respondent. Accounting for nine national securities exchanges and one registered securities association, the total burden to comply with the quarterly and annual reporting requirements in proposed new Rule 17a–26 is therefore estimated to be 1,950 hours per year. Further, for purposes of this release, the Commission estimates that an exchange or association would incur a burden of 4 hours to prepare each interim updating amendment, which would likely be required, on average, 5 times per year for a total of 20 hours per respondent and 200 hours total for the nine exchanges and one association. Accordingly, as discussed above in Section IX., the total burden resulting from the proposed rule's quarterly and annual reporting provisions would be 2,150 hours and $60[721] to prepare and file with the Commission each report and interim supplement.

The Commission notes that some exchanges and associations could need to hire additional staff to comply with the requirements of the proposed rule. Whether an exchange or association

[719] *See* proposed Rule 17a–26(a)(2) and (b)(3). The term ''electronic SRO trading facility'' would be defined as a facility of an exchange or association that executes orders in securities on an electronic basis. *See* proposed Rule 17a–26 (j)(3).

[720] *See* proposed Rule 17a–26(d)(1).

[721] The Commission estimates that an average filing will weigh two ounces, accounting for a diskette and accompanying letter, and will be mailed via first class mail at a rate of $0.37 for the first ounce and $0.23 for the additional ounce, for a total of $0.60 per filing. At four quarterly reports, one annual report, and an estimated five interim supplements, the Commission expects that each exchange or association would incur a cost of $6 to comply with the proposed rule. The Commission solicits comments on the accuracy of this estimate.

would need to hire additional staff to gather information and prepare the required reports would depend on the thoroughness and effectiveness of an exchange's or association's current recordkeeping systems and practices, the level and extent of regulatory activity subject to quarterly reporting (*e.g.,* an exchange that experiences unusually heavy enforcement activity or has highly active listings activity could incur a greater reporting burden), and the current workloads of existing staff. The Commission expects that most exchanges and associations, in fulfilling their self-regulatory and recordkeeping requirements, are currently collecting most, if not all, of the information required to be reported under the proposed rule. Based on conversations with two of the larger SROs, the Commission understands that much of the information required by the proposed rule, in particular with respect to the quarterly reports, currently is maintained by those SROs. Specifically, the information that would be required to appear in the quarterly reports, including the results of surveillance programs; information on complaints received; information on investigations and examinations; information on enforcement cases; information on new listings, delistings, and alleged failures to satisfy listing standards; and board and board committee agenda, generally is retained by those SROs in varying formats. Accordingly, the primary cost to those SROs with respect to the information they currently retain would be in assembling that information into an electronic report for submission to the Commission. Thus, a primary burden on an exchange or association would be to prepare a consolidated electronic report containing all of the information proposed to be required, to the extent that it is not doing so already as part of its routine business practices. The Commission seeks comment on these costs. The Commission also requests comment on the extent to which exchanges and associations currently maintain this information in electronic format.

The required annual reports would require exchanges and associations to aggregate information contained in the quarterly reports to be submitted as part of the annual report; however, the Commission expects that those costs would not be substantial. Given the proposed electronic nature of the quarterly reports, the Commission would expect that it would not be a costly or complicated task for an SRO to aggregate the quarterly information and incorporate the data into the proposed annual report. The Commission requests comment on the costs of compiling the data and preparing the proposed annual report. Exchanges and associations should comment on whether such reports would be prepared in-house or by outside counsel or advisors. Comment is also requested on whether exchanges and associations would expect to purchase software or hardware to aid in the preparation of the proposed annual reports.

The Commission believes that exchanges and associations would incur costs related to the proposed requirement to include in the annual report an audit of any electronic SRO trading facility, which must be prepared by an independent third party. The purpose of this audit is to assess whether the operations of the electronic SRO trading facility comply with the rules governing the facility. Because the exchange or association would need to hire an independent third party to conduct this annual audit, it would incur ongoing yearly costs to comply with this requirement. As discussed above in Section IX., the Commission estimates that nine national securities exchanges and one registered securities association would be required to obtain and submit as part of the annual report, an annual audit of any electronic SRO trading facility, and each such exchange or association owning, operating, or sponsoring at least one such facility would spend approximately 15 hours interacting with the third party with respect to their conduct of the audit and preparation of the audit report and 20 hours reviewing each audit report received from the third party, for a total of 35 hours per exchange or association per year, for a total annual reporting and recordkeeping burden of 350 hours. With respect to the third-party auditor, the Commission estimates that it would take each third party 100 hours to conduct the audit and prepare the audit report for each exchange or association that owns, operates, or sponsors at least one electronic SRO trading facility, for a total annual cost per exchange or association of $15,000,[722] resulting in a total annual burden cost of $150,000. The Commission requests comment on the expected costs of hiring an independent third-party to conduct the proposed annual audit. Exchanges and associations should comment as to whether they currently use the services of an independent third party to audit their operations and what type of business the third party is primarily engaged in (*e.g.,* legal, consultant, financial). The Commission notes, however, that certain other annual report requirements, such as the discussion of internal controls and the discussion of the processes for carrying out regulatory responsibilities, should not impose significant costs on exchanges and associations.

Further, the Commission believes that exchanges and associations would incur initial start-up costs as part of the proposed rule. Exchanges and associations would be required to establish procedures for a uniform, readily accessible, electronic format for the required data. While these SROs would incur start-up costs in establishing these procedures, the Commission does not believe that these start-up costs would be significant. As stated above in Section IX., the Commission estimates that each exchange or association would spend approximately 35 hours during the initial year of the proposed rule's effectiveness to establish procedures for the preparation of the reports required by the proposed rule in a uniform, readily accessible, and usable electronic format. Accounting for nine national securities exchanges and one registered securities association, the total burden per year to comply with the provision in proposed Rule 17a–26 regarding the uniform format for the quarterly and annual reports is estimated to be 350 hours. The Commission seeks comment on these costs.

3. Request for Comment

The Commission requests data to quantify the costs and benefits of proposed Rule 17a–26. The Commission seeks estimates of these costs and benefits, as well as any costs and benefits not discussed above, that may result from the adoption of this proposed rule. Commenters are requested to provide empirical data and other factual support for their views to the extent possible. The Commission specifically requests comment on the costs and benefits associated with the Commission's proposal to require periodic regulatory reports from exchanges and associations, including both start-up costs and annual ongoing compliance costs. The Commission also specifically requests comment on the costs and benefits of obtaining the report of an independent third party relating to the annual review of the

[722] The estimate assumes that the report will be prepared by an independent accounting firm or similar entity for the exchange or association at an estimated cost of $150 per hour, based on an hourly estimate for auditing services obtained from industry sources. The Commission requests comment on this estimate, and on what type of entity an exchange or association may hire to prepare this report.

operations of an electronic SRO trading facility.

F. Costs and Benefits of Proposed Rule 17a–27

Proposed Rule 17a–27 would require any member of an exchange or association that is a broker or dealer to provide a report to the Commission and the exchange or association of which it is a member when it, alone or together with its related persons, acquires, directly or indirectly, more than 5% of any class of securities or other ownership interest of such exchange, association, or of a facility of such exchange or association through which it is permitted to effect transactions.[723]

1. Benefits

As discussed above, a member of an exchange or association that is a broker or dealer and that owns a significant interest in such exchange, association, or a facility thereof potentially could control or influence the regulatory process and market operations of the exchange or association to its benefit. Requiring such members to furnish a statement to the Commission, and a copy of the statement to the SRO, describing their ownership interests in an exchange, association or facility, along with information regarding the member's ability to influence the management of the exchange or association, would help guard against any potential abuses of influence or control of the SRO's regulatory authority by alerting the Commission and the applicable exchange or association to accumulations of significant ownership interests by its members that are brokers or dealers. Providing information to the Commission on accumulations of interest by these members would facilitate the SRO's ability to effectively perform its regulatory obligations, and the Commission's ability to effectively carry out its statutory oversight responsibilities with respect to the exchange or association, by allowing the Commission and the applicable exchange or association to more easily monitor for accumulations of significant interests, to monitor the effects of such ownership, and to monitor the ability of a person or group of related persons to influence the operation of the exchange, association, or facility.

Moreover, providing copies of the statement to the applicable exchange or association for which ownership information is provided would facilitate the exchange's or association's ability to monitor whether the ownership interests of its members that are brokers or dealers are in compliance with the proposed limits on broker-dealer members' ownership in and voting of interests in the SRO or its facilities. In addition, proposed Rule 17a–27 would assist exchanges and associations in complying with the proposed requirement of Exhibit Q to revised Form 1 and new Form 2 that would require exchanges and associations to provide disclosure to the Commission regarding any person that owns more than 5% of the exchange, association, or a facility thereof.

2. Costs

The Commission recognizes that the proposed rule would impose costs on members that are brokers or dealers to track, calculate, and report ownership of more than 5% in an exchange or association of which it is a member or of a facility of an exchange or association through which it is permitted to effect transactions. The Commission preliminarily believes that, given the nature of their business, most members that are brokers or dealers currently have in place systems to track their ownership (and that of their affiliates) of securities, even for securities for which there is no reporting requirement under Sections 13(d) or 13(g) of the Exchange Act, but specifically requests comment on this issue.[724] The proposed rule likely would, however, require these members to make modifications to their systems and procedures to obtain additional ownership information for ''related persons'' for which they might not already obtain such information. For instance, the definition of ''related person'' includes immediate family members of the member (if such member is a natural person) and of a person associated with a member.[725] The Commission notes that if the exchange, association, or facility is a public reporting company under Section 12 of the Exchange Act,[726] members of the exchange or facility are required under Regulation 13D under the Exchange Act[727] to monitor their ownership interests in such entity and to file a Schedule 13D or 13G if they exceed the 5% reporting threshold.[728] However, because the scope of the reporting requirement of proposed Rule 17a–27 is broader than what is required by Schedule 13D and 13G, members may incur additional costs to comply with the proposed rule. In addition, for exchanges, associations or facilities that are not public reporting companies under Section 12 of the Exchange Act,[729] the member likely would incur greater costs to comply with proposed Rule 17a–27 because such members currently are not required to monitor their ownership interests in those entities. The Commission requests comment on the costs associated with obtaining and calculating ownership information under the proposed rule.

A member of an exchange or association that is a broker or dealer and that exceeds the reporting threshold also would incur costs to prepare and file the statement required by proposed Rule 17a–27. Such members would incur in-house legal, compliance and administrative costs associated with preparing and filing the initial report and periodic amendments in the event of an increase or decrease of more than 1% of the ownership interest last reported. The members also may incur outside legal costs associated with preparing these reports; although the Commission preliminarily believes that preparation of the report likely would not be outsourced, the Commission requests comment on this issue. As discussed above in Section IX., the Commission estimates that a member would spend approximately 35 hours to prepare and file the initial report, 2 hours and $1.29 to prepare and send a copy of the report or any amendment to the exchange or association and 10 hours to prepare and file any amendment, resulting in a total initial annual burden for all members of 4,700 hours and $258, and 1,200 hours and $258 annually thereafter. Additionally, the Commission estimates that each exchange or association would spend 4 hours to post a member's report on its Web site, resulting in a total annual burden of 400 hours for all exchanges and associations.

3. Request for Comment

The Commission requests comment on whether there are any additional costs of the proposed Rule 17a–27. The Commission also requests comment on quantifying the amount of time and the dollar amount of the costs discussed above and any additional costs, including the costs associated with

[723] *See* supra Section VI. for a discussion of the proposed rule.

[724] For example, members may monitor their ownership interests to prevent and monitor conflicts of interests and for supervision and compliance purposes.

[725] The Commission preliminarily believes that most, if not all, members require their associated persons to report their securities transactions and holdings to the member. *See, e.g.,* NASD Rule 3050. Thus, the member could incorporate this information into its system for tracking ownership as would be required by proposed Rule 17a–27.

[726] 15 U.S.C. 78*l*.

[727] 17 CFR 240.13d–1 through 13d–7.

[728] 17 CFR 240.13d–101 or 240.13d–102.

[729] 15 U.S.C. 78*l*.

tracking and reporting ownership interests pursuant to the proposed rule. The Commission also seeks comment on any additional benefits of the proposed Rule 17a–27.

XI. Consideration of Burden on Competition, and Promotion of Efficiency, Competition, and Capital Formation

Section 3(f) of the Exchange Act requires the Commission, whenever it engages in rulemaking or in the review of a rule of an SRO, and it is required to consider or determine whether an action is necessary or appropriate in the public interest, to consider, in addition to the protection of investors, whether the action will promote efficiency, competition, and capital formation.[730] Section 23(a)(2) of the Exchange Act [731] requires the Commission, in adopting rules under the Exchange Act, to consider the impact that any such rules would have on competition. Section 23(a)(2) also prohibits the Commission from adopting any rule that would impose a burden on competition not necessary or appropriate in furtherance of the purposes of the Exchange Act.[732]

The Commission has considered the proposed rules in light of these standards and preliminarily believes that they will not impose a burden on competition not necessary or appropriate in furtherance of the purposes of the Exchange Act. In addition, the Commission believes that the proposed governance rules should have a beneficial impact on efficiency, competition, and capital formation. In particular, proposed Exchange Act Rules 6a–5 and 15Aa–3 are designed to strengthen the independence of SROs' governance and regulatory processes by enhancing the independence and effectiveness of exchange and association boards and those board committees. Moreover, the independence of exchanges' and associations' regulatory programs should be strengthened by the proposal to require the separation of their regulatory programs from their market operations and other commercial interests, as well as by the prohibition on using regulatory funds for non-regulatory purposes and the prohibition on using regulatory information for competitive purposes. Further, the proposed limitations on ownership and voting should help prevent members of an exchange or association that are brokers or dealers from being able to influence the operation of the exchange or association and the performance of its regulatory function in a manner detrimental to its competitors or in a manner favorable to such person or its affiliates. Overall, these requirements would help prevent an exchange or association from disregarding the regulatory process, and should help bolster investors' confidence in the entities that oversee and operate our nation's securities markets. Similarly, the Commission believes that the disclosure requirements under proposed Exchange Act Rules 6a–2, 15Aa–1, 15Aa–2 and the related Forms 1 and 2 are appropriately tailored to provide the Commission and the public with important information about an exchange's or association's governance practices and regulatory programs. To the extent that the proposed rules would affect efficiency, competition, and capital formation, we believe that any effect would be positive because these proposals should help improve the transparency of exchanges and associations and thus increase investor confidence in the administration and operation of the securities markets.

The Commission believes that the reporting requirements of proposed new Exchange Act Rule 17a–26 would not impose any unnecessary or inappropriate burden on competition because they would enhance the Commission's ability to monitor exchanges' and associations' compliance with their regulatory responsibilities, particularly during the period between inspections by Commission staff. Further, proposed Rule 17a–26 should enable the Commission to deploy its inspection resources more efficiently and to monitor more effectively these SROs' responses to critical issues affecting their markets. In addition, the Commission believes that, to the extent that there is any impact on efficiency, competition, and capital formation as a result of proposed Rule 17a–26, the result would be a positive one. The proposal is designed to require exchanges and associations to provide quarterly and annual information about key features of their regulatory programs, which in turn should heighten these SROs' attention to their regulatory responsibilities under the Exchange Act as they prepare the required quarterly and annual reports.

The proposed amendments to Rule 17a–1 and proposed new Rule 17a–27 should bolster investor confidence in the markets by helping to ensure that the Commission is able to carry out its oversight responsibilities over national securities exchanges and registered securities associations. In addition, proposed Regulation AL, by requiring notice and heightened reporting by an exchange or association to the Commission with respect to the exchange's or association's oversight of the listing and trading of the securities of an affiliated issuer, should help bolster investor confidence that the exchange or association is fairly and effectively carrying out its regulatory obligations with respect to the listing and trading of the affiliated security.

By promoting investor confidence in the fairness and integrity of our markets, and in the entities that oversee and operate our securities markets, investors may be more willing to effect transactions in those markets, which in turn would help to increase liquidity and to foster the capital formation process. The Commission requests comment on whether the proposed rules are expected to affect efficiency, competition, and capital formation.

XII. Consideration of Impact on the Economy

For purposes of the Small Business Regulatory Enforcement Fairness Act of 1996, or ''SBREFA,'' [733] the Commission must advise the Office of Management and Budget as to whether proposed Exchange Act Rules 3b–19, 6a–5, 15Aa–3, 17a–26, 17a–27, or Regulation AL; the proposed amendments to Form 1 under the Exchange Act, redesignated Form 2 under the Exchange Act, Exchange Act Rules 6a–2, 15Aa–1 and 17a–1, or redesignated Exchange Act Rule 15Aa–2; or the removal of Forms X–15AJ–1 and X–15AJ–2 under the Exchange Act constitute a ''major'' rule. Under SBREFA, a rule is considered ''major'' where, if adopted, it results or is likely to result in:

- An annual effect on the economy of $100 million or more (either in the form of an increase or a decrease);
- A major increase in costs or prices for consumers or individual industries; or
- A significant adverse effect on competition, investment, or innovation.

If a rule is ''major,'' its effectiveness will generally be delayed for 60 days pending Congressional review. We request comment on the potential impact of the proposed Exchange Act rules on the economy on an annual basis. Commenters are requested to provide empirical data and other factual support for their views to the extent possible.

[730] 15 U.S.C. 78c(f).

[731] 15 U.S.C. 78w(a).

[732] 15 U.S.C. 78w(a)(2).

[733] Pub. L. 104–121, Title II, 110 Stat. 857 (1996) (codified in various sections of 5 U.S.C., 15 U.S.C., and as a note to 5 U.S.C. 601).

XIII. Regulatory Flexibility Act Certification

Section 3(a) of the Regulatory Flexibility Act (''RFA'')[734] requires the Commission to undertake an Initial Regulatory Flexibility Analysis (''IRFA'') of the proposed rules and amendments on small entities unless the Commission certifies that the proposed rules and amendments, if adopted, would not have a significant economic impact on a substantial number of small entities.[735] The Commission hereby certifies, pursuant to 5 U.S.C. 605(b), that the proposed Rules 3b–19, 6a–5, 15Aa–2, 15Aa–3, 17a–26, and 17a–27, proposed Regulation AL, revised Rules 6a–2, 15Aa–1, 17a–1, and revised Form 1 and new Form 2, if adopted, would not have a significant economic impact on a substantial number of small entities. Proposed Rules 3b–19, 6a–5, 15Aa–2, 15Aa–3, and 17a–26, proposed Regulation AL, Section (d) of proposed Rule 17a–27, revised Rules 6a–2, 15Aa–1, 17a–1, and revised Form 1 and new Form 2 would apply only to national securities exchanges, exchanges exempted from such registration based on limited volume, registered securities associations, or affiliated securities associations. Neither national securities exchanges, exchanges exempted from such registration based on limited volume, registered securities associations, nor affiliated securities associations, are considered ''small entities'' within the meaning of the Regulatory Flexibility Act.[736] Accordingly, the Commission does not believe that proposed Rules 6a–5, 15Aa–2, 15Aa–3, and 17a–26, proposed Regulation AL, revised Rules 6a–2, 15Aa–1, 17a–1, and revised Form 1 and new Form 2 would have a significant economic impact on a substantial number of small entities.

Proposed Rules 17a–27(b) and (c) would apply to any member of an exchange or association that is a broker or dealer. The Commission preliminarily believes that proposed Rules 17a–27(b) and (c) would not have a significant economic impact on a substantial number of small entities. Proposed Rules 17a–27(b) and (c) would apply to any member of a national securities exchange or registered securities association that is a broker or dealer and that, alone or together with its ''related persons,''[737] directly or indirectly beneficially owns more than 5% of any class of securities or other ownership interest of such exchange or association, or a facility of an exchange or association. The Commission estimates there are approximately 6,800 members of an exchange or association that are registered brokers or dealers,[738] of which approximately 906 are considered small entities.[739] Although the Commission does not have sufficient data to determine how many members that are brokers or dealers and are small entities have or would have, alone or together with their related persons, ownership interests that would trigger the requirements of proposed Rule 17a–27, the Commission believes it is unlikely that any member that is a broker or dealer and is a small entity would trigger the 5% threshold, given the $500,000 capital limit a broker or dealer must not exceed to be considered a small entity.[740] Based upon information available to the Commission at this time, the Commission estimates that there are less than 20 brokers or dealers that would trigger the requirements of proposed Rules 17a–27(b) and (c), and that these brokers or dealers would not be considered small entities. The Commission requests comment on this estimate. Furthermore, because of the cost of acquiring 5% or more of the securities of or other ownership interest in an exchange, association or facility thereof, the Commission believes it is unlikely that any broker or dealer that is a small entity would acquire such a substantial interest.[741] Even if such a broker or dealer did acquire an interest in excess of 5%,[742] the Commission does not believe that a substantial number would do so, given the limited number of exchanges, associations and facilities, and the relatively high price of acquiring such an interest. Consequently, the Commission does not believe that a substantial number of small entities would be required to prepare and file reports with the Commission pursuant to proposed Rule 17a–27. In addition, if a small broker or dealer did have to file a report with the Commission because it exceeded the 5% threshold, the Commission does not believe that the preparation and filing of that report would have a significant economic impact on the broker or dealer.[743]

[734] 5 U.S.C. 603(a).

[735] 5 U.S.C. 605(b).

[736] 5 U.S.C. 603.

[737] Pursuant to proposed Rule 17a–27(a)(13), the term ''related person'' would be defined to mean, with respect to any member that is a broker or dealer: (i) Any affiliate of the member; (ii) any person associated with the member; (iii) any immediate family member of such member, or any immediate family member of the member's spouse, who, in each case, has the same home as the member or who is a director or officer of the disclosure entity or any of its parents or subsidiaries; and (iv) any immediate family member of the person associated with the member, or any immediate family member of that person's spouse, who, in each case, has the same home as the person associated with the member or who is a director or officer of the disclosure entity or any of its parents or subsidiaries. Pursuant to proposed Rule 17a–27(a)(6), the term ''disclosure entity'' would be defined to mean, with respect to any member: (i) A national securities exchange of which it is a member, other than an exchange registered pursuant to Section 6(g) of the Exchange Act; (ii) a registered securities association of which it is a member, other than a limited purpose national securities association registered pursuant to Section 15A(K)(l) of the Exchange Act; and (iii) a facility of such national securities exchange or registered securities association through which it is permitted to effect transactions.

[738] *See id.*

[739] Based on the data in reports filed pursuant to Exchange Act Rule 17a–5, the Commission has determined that 906 of the 6,553 filers are ''small entities.'' Paragraph (c) of Rule 0–10 of the Act states that the term ''small business,'' when referring to a broker or dealer, means a broker or dealer that: (i) Had total capital (net worth plus subordinated liabilities) of less than $500,000 on the date in the prior fiscal year as of which its audited financial statements were prepared pursuant to 17 CFR 240.17a–5(d) or, if not required to file such statements, a broker or dealer that had total capital (net worth plus subordinated liabilities) of less than $500,000 on the last business day of the preceding fiscal year (or in the time that it has been in business, if shorter); and (ii) is not affiliated with any person (other than a natural person) that is not a small business or small organization as defined in Rule 0–10.

[740] 17 CFR 240.0–10(c)(1). *See supra* note 739.

[741] For example, there were 46,310,865 outstanding shares of common stock of Archipelago Holdings, Inc. as of August 12, 2004 (*see* Archipelago Holdings, Inc.'s prospectus dated August 12, 2004, filed with the Commission on August 12, 2004). Based on the closing price of $17.46 per share for Archipelago Holdings, Inc.'s common stock on November 3, 2004, 5% of the common stock of Archipelago Holdings, Inc. would be valued at approximately $43,886,461 (assuming the number of outstanding shares has not increased or decreased). There are 1,366 ''seats'' on the NYSE. These seats represent an ownership interest in the NYSE. Based on the last reported sale price of a NYSE seat on October 29, 2004 of $1,035,000 (*see* NYSE's Web site, *www.nyse.com*), a 5% ownership interest in the NYSE would be valued at approximately $70,690,500. Similarly, there are over 200 seats on the BSE. Assuming 200 seats and based on the last reported sale price of $5,000 on April 6, 2004 (*see* BSE's Web site, ''*www.bostonstock.com*''), a 5% ownership interest in the BSE would be valued at approximately $50,000. The Commission believes it unlikely that an entity with total capital of less than $500,000 would be the holder of an ownership interest of such value or, if it did hold such interest, would not be affiliated with an entity (other than a natural person) that is not a small entity.

[742] For example, the Commission believes that the possibility of a small broker or dealer acquiring a 5% interest in the BSE would be greater than the possibility of a small broker or dealer acquiring a 5% interest in the NYSE.

[743] The Commission notes that, if any small entities are required to prepare and file reports pursuant to proposed Rule 17a–27, the Commission estimates that the rule would require: (i) approximately 35 hours per statement to prepare and file the initial statement pursuant to proposed Rule 17a–27(b), including the time required for a member to modify its system for monitoring ownership for purposes of preparing the statement; (ii) approximately 2 hours and $1.29 to prepare and send the copy of the statement or any amendment

Even if a small broker or dealer did not trigger the 5% ownership threshold, it may feel the need to monitor ownership levels. The Commission believes that any system or other changes a small broker or dealer would need to make to monitor ownership interest would not cause a significant economic impact. The Commission believes that given the nature of their business, most members that are brokers or dealers, including those that are small entities, would have in place the necessary systems and procedures for tracking their ownership of securities, both for ownership of entities subject to reporting under Section 13(d) of the Exchange Act and for other entities as well. The Commission preliminarily believes that members could monitor their and their related persons' ownership interests in exchanges, associations and facilities pursuant to these existing systems. The Commission does recognize, however, that members may need to update their systems to meet the scope of the reporting parameters of the proposed rule (for instance, to include all ''related persons''), but preliminarily does not believe that these changes would create a significant economic impact. In addition, a broker or dealer that is considered a small entity likely would have fewer ''related persons'' for which to track ownership. Therefore, the Commission does not believe that proposed Rule 17a–27 would have a ''significant economic impact'' on a substantial number of small entities.

The Commission encourages written comments regarding this certification. The Commission requests that commentators describe the nature of any impact on small entities and provide empirical data to support the extent of the impact. In particular, the Commission requests comments on (a) the number of small entities that would be affected by proposed Rule 17a–27; (b) the nature of any impact the by proposed Rule 17a–27 would have on small entities and empirical data supporting the extent of the impact; and (c) how to quantify the number of small entities that would be affected by or how to quantify the impact of by proposed Rule 17a–27. Commentators are asked to describe the nature of any impact and provide empirical data supporting the extent of the impact. Persons wishing to submit written comments should refer to the instructions for submitting comments in the front of this release.

XIV. Statutory Authority and Text of Proposed Rules

Pursuant to the Exchange Act, 15 U.S.C. 78a *et seq.*, and particularly, Sections 3, 6, 11A, 15A, 17, 19, 23(a) and 36(a) thereof, the Commission is proposing to (1) adopt §§ 240.3b–19, 240.6a–5, 240.15Aa–3, 240.17a–26, 240.17a–27 and Regulation AL under the Exchange Act; (2) amend Form 1 and §§ 240.6a–2, 240.15Aa–1 and 240.17a–1 under the Exchange Act; (3) redesignate § 240.15Aj–1 under the Exchange Act as § 240.15Aa–2 and amend newly redesignated § 240.15Aa–2; (4) redesignate Form X–15AA–1 as Form 2 and amend newly redesignated Form 2; and (5) remove Forms X–15AJ–1 and X–15AJ–2.

List of Subjects in 17 CFR Parts 240, 242 and 249

Brokers, Reporting and recordkeeping requirements, Securities.

For the reasons stated in the preamble, the Commission is proposing to amend Title 17, Chapter II of the Code of the Federal Regulations as follows:

PART 240—GENERAL RULES AND REGULATIONS, SECURITIES EXCHANGE ACT OF 1934

1. The general authority citation for part 240 is revised to read as follows:

Authority: 15 U.S.C. 77c, 77d, 77g, 77j, 77s, 77z–2, 77z–3, 77eee, 77ggg, 77nnn, 77sss, 77ttt, 78c, 78d, 78e, 78f, 78g, 78i, 78j, 78j–1, 78k, 78k–1, 78*l*, 78m, 78n, 78o, 78*o*–3, 78p, 78q, 78s, 78u–5, 78w, 78x, 78*ll*, 78mm, 79q, 79t, 80a–20, 80a–23, 80a–29, 80a–37, 80b–3, 80b–4, 80b–11, and 7201 *et seq.*; and 18 U.S.C. 1350, unless otherwise noted.

* * * * *

1. Section 240.3b–19 is added to read as follows:

§ 240.3b–19 Definition of rules of an exchange and rules of an association.

(a) *Definitions.* The terms *rules of an exchange* and *rules of an association* shall include the constitution, articles of incorporation, bylaws, and rules, or instruments corresponding to the foregoing, of a regulatory subsidiary of an exchange or of an association of brokers and dealers.

(b) *Exemptions.* Upon written request or on its own motion, the Commission may grant an exemption from the provisions of this section, either unconditionally or on specified terms and conditions, if the Commission determines that such exemption is necessary or appropriate in the public interest and is consistent with the protection of investors.

3. Section 240.6a–2 is amended by:

a. Revising paragraphs (a)(2) and paragraphs (b) through (e), and

b. Adding paragraph (a)(3) and new paragraph (g).

The revisions and additions read as follows:

§ 240.6a–2 Amendments to application.

(a) * * *

(2) Information filed as part of Exhibits C, D, E, H, I, J, K, M, N, O, P, S, or U and as part of Item 3 of Exhibit F or Items 1, 5, 6, and 7 of Exhibit Q, or any amendments thereto; or

(3) Information filed as part of Items 2 or 3 of Exhibit Q, or any amendment thereto, except that such information is not required to be filed with respect to any ownership change that is less than one percent from the ownership interest last reported on Form 1 (17 CFR 249.1), or any amendment thereto.

(b) Within 60 days of the end of its fiscal year, a national securities exchange or an exchange exempted from such registration based on limited volume, must submit an amendment to its Form 1 that updates the Form 1 in its entirety. Each Exhibit to the amended Form 1 shall be up to date as of the end of the latest fiscal year of the exchange.

(c) Except as set forth in paragraph (d) of this section, a national securities exchange or an exchange exempted from such registration based on limited volume, must continuously post any amendments required to be filed under paragraphs (a) and (b) of this section on a publicly-accessible Internet web site controlled by the exchange, simultaneous with the filing of such information in paper form with the Commission. Only the most recent annual amendment filed under paragraph (b) of this section and any subsequent updates filed under paragraph (a) of this section are required to be posted on such Internet Web site. In its filing with the Commission, such exchange shall:

(1) Indicate the location of the Internet Web site where such information may be found; and

(2) Certify that the information available at such location is accurate as of its date.

(d)(1) If the information required to be filed under paragraphs (a) or (b) of this section for Exhibits A, B, M, N, S, or T or Items 1–7 of Exhibit L is available continuously on an Internet Web site controlled by an exchange, in lieu of filing such information in paper form

to the applicable exchange or association pursuant to proposed Rule 17a–27(c); and (iii) that each amendment required by proposed Rule 17a–27(b)(4) would require 10 hours per amendment. *See supra* Section IX.G.4. for further discussion of the Commission's estimates of the reporting and recordkeeping burden for proposed Rule 17a–27.

with the Commission, such exchange may:

(i) Indicate the location of the Internet Web site where such information may be found; and

(ii) Certify that the information available at such location is accurate as of its date.

(2) Only the most recent annual amendment required under paragraph (b) of this section and any subsequent updates required under paragraph (a) of this section must be continuously posted on an Internet Web site controlled by an exchange under paragraph (d)(1) of this section.

(e) Upon written request or on its own motion, the Commission may grant an exemption from any of the requirements of this section, either unconditionally or on specified terms and conditions, if the Commission determines that such exemption is necessary or appropriate in the public interest and is consistent with the protection of investors.

* * * * *

(g) A national securities exchange shall file as an amendment to Form 1 a complete new statement together with all exhibits which are prescribed to be filed in connection with Form 1 no later than [six months following the date of publication of final rules in the **Federal Register**].

* * * * *

4. Section 240.6a–5 is added to read as follows:

§ 240.6a–5 Fair administration and governance of national securities exchanges.

(a) *General.* Each national securities exchange must comply with, and have rules that comply with, the provisions of this section, and must have the capacity to carry out the purposes of this section. If the national securities exchange has a regulatory subsidiary, the provisions of paragraphs (c), (d), (e), (f), (g), (h), (i), (j), (k), (l), (m), (n), (p) and (q) of this section shall apply to such regulatory subsidiary in the same manner as the national securities exchange; *provided, however,* that to the extent that a Standing Committee of the national securities exchange is authorized to carry out responsibilities on behalf of the regulatory subsidiary, as set forth in its written charter, the regulatory subsidiary shall not be required to have a Standing Committee that performs the same responsibilities and to the extent that the Chief Regulatory Officer of the national securities exchange performs the same responsibilities for the regulatory subsidiary as he or she does for the national securities exchange, the regulatory subsidiary shall not be required to appoint a Chief Regulatory Officer. When used in paragraphs (c), (d), (e), (f), (g), (h), (i), (j), (k), (l), (m), (n), (p) and (q) of this section, the terms ''exchange'' shall also mean the regulatory subsidiary of the exchange; ''Board'' shall also mean the Board of the regulatory subsidiary; ''director'' or ''directors'' shall also mean the directors or directors of the regulatory subsidiary; ''independent director'' or ''independent directors'' shall also mean the independent director or independent directors of the regulatory subsidiary; ''executive session'' shall also mean executive session of the Board of the regulatory subsidiary; and ''Standing Committee'' or ''Standing Committees'' shall also mean the Standing Committee or Standing Committees of the Board of the regulatory subsidiary.

(b) *Definitions.* For purposes of this section, the following definitions shall apply:

(1) The term *affiliate* means any person that, directly or indirectly, controls, is controlled by, or is under common control with, the national securities exchange.

(2) The term *affiliated issuer* means the national securities exchange, an SRO trading facility of the national securities exchange, an affiliate of the national securities exchange, or an affiliate of an SRO trading facility of the national securities exchange.

(3) The term *affiliated security* means any security issued by an affiliated issuer, except that it shall not include any option exempt from the Securities Act of 1933 under § 230.238 of this chapter and any security futures product exempt from the Securities Act of 1933 under section 3(a)(14) of the Securities Act of 1933 (15 U.S.C. 77c(a)(14)).

(4) The terms *beneficial ownership, beneficially owns* or any derivative thereof shall have the same meaning, with respect to any security or other ownership interest, as set forth in § 240.13d–3, as if (and whether or not) such security or other ownership interest were a voting equity security registered under section 12 of the Act (15 U.S.C. 78*l*); provided that to the extent any person beneficially owns any security or other ownership interest solely because such person is a member of a group within the meaning of section 13(d)(3) of the Act (15 U.S.C. 78m(d)(3)), such person shall not be deemed to beneficially own such security or other ownership interest for purposes of this section, unless such person has the power to direct the vote of such security or other ownership interest.

(5) The term *Board* means the Board of Directors or Board of Governors of the national securities exchange, or any equivalent body.

(6) The term *compensation* means any form of compensation and any material perquisites awarded, or that are to be awarded, whether or not set forth in any written documents, to any executive officer of the national securities exchange, including, without limitation, salary, bonus, pension, deferred compensation, compensation awarded pursuant to any incentive plan or equity-based plan, or any other plan, contract, authorization or arrangement pursuant to which cash or securities may be received.

(7) The term *control* means the possession, direct or indirect, of the power to direct or cause the direction of the management and policies of a person, whether through the ownership of voting securities, by contract, or otherwise. A person is presumed to control another person if the person:

(i) Is a director, general partner or officer exercising executive responsibility (or having similar status or functions);

(ii) Directly or indirectly has the right to vote 25 percent or more of a class of voting securities or has the power to sell or direct the sale of 25 percent or more of a class of voting securities; or

(iii) In the case of a partnership, has the right to receive, upon dissolution, or has contributed, 25 percent or more of the capital.

(8) The term *director* means any member of the Board.

(9) The term *executive session* means a meeting of the independent directors of the Board, without the presence of management of the national securities exchange or the directors who are not independent directors.

(10) The term *facility* has the same meaning as set forth in section 3(a)(2) of the Act (15 U.S.C. 78c(a)(2)).

(11) The term *immediate family member* means a person's spouse, parents, children, and siblings, whether by blood, marriage or adoption, or anyone residing in such person's home.

(12) The term *independent director* means a director who has no material relationship with the national securities exchange or any affiliate of the national securities exchange, any member of the national securities exchange or any affiliate of such member, or any issuer of securities that are listed or traded on the national securities exchange or a facility of the national securities exchange. A director is not independent if any of the following circumstances exists:

(i) The director, or an immediate family member, is employed by or otherwise has a material relationship with the national securities exchange or any affiliate of the national securities exchange, or within the past three years was employed by or otherwise had a material relationship with the national securities exchange or any affiliate of the national securities exchange.

(ii) The director is a member or is employed by or affiliated with a member or any affiliate of a member or, within the past three years was a member or was employed by or affiliated with a member or any affiliate of a member, or the director has an immediate family member that is, or within the past three years was, an executive officer of a member or any affiliate of a member.

(iii) The director, or an immediate family member, has received during any twelve month period within the past three years more than $60,000 in payments from the national securities exchange or any affiliate of the national securities exchange or from a member or any affiliate of a member, other than the following:

(A) Compensation for Board or Board committee service;

(B) Compensation to an immediate family member who is not an executive officer of the national securities exchange or any affiliate of the national securities exchange or of a member or any affiliate of a member; and

(C) Pension and other forms of deferred compensation for prior service, provided such compensation is not contingent in any way on continued service.

(iv) The director, or an immediate family member, is a partner in, or controlling shareholder or executive officer of any organization to which the national securities exchange or any affiliate of the national securities exchange made, or from which the national securities exchange or any affiliate of the national securities exchange received, payments for property or services in the current or any of the past three full fiscal years that exceed two percent of the recipient's consolidated gross revenues for that year, or $200,000, whichever is more, other than the following:

(A) Payments arising solely from investments in the securities of the national securities exchange or any facility or affiliate of the national securities exchange; or

(B) Payments under non-discretionary charitable contribution matching programs.

(v) The director, or an immediate family member, is, or within the past three years was, an executive officer of an issuer of securities listed or primarily traded on the national securities exchange or a facility of the national securities exchange.

(vi) The director, or an immediate family member, is, or within the past three years was, employed as an executive officer of another entity where any of the national securities exchange's executive officers serves on that entity's compensation committee.

(vii) The director, or an immediate family member, is a current partner of the outside auditor of the national securities exchange or any affiliate of the national securities exchange, or was a partner or employee of the outside auditor of the national securities exchange or any affiliate of the national securities exchange who worked on the national securities exchange's or any affiliate's audit, at any time within the past three years.

(viii) In the case of a director that is a member of the Audit Committee, such director (other than in his or her capacity as a member of the Audit Committee, the Board, or any other Board committee), accepts, directly or indirectly, any consulting, advisory, or other compensatory fee from the national securities exchange, any affiliate of the national securities exchange, any member, or any affiliate of a member, other than fixed amounts of pension and other forms of deferred compensation for prior service, provided such compensation is not contingent in any way on continued service.

(13) The term *material relationship* means a relationship, whether compensatory or otherwise, that reasonably could affect the independent judgment or decision-making of the director.

(14) The term *member* has the same meaning as set forth in section 3(a)(3)(A) of the Act (15 U.S.C. 78c(a)(3)(A)).

(15) The term *person* has the same meaning as set forth in section 3(a)(9) of the Act (15 U.S.C. 78c(a)(9)).

(16) The term *person associated with a member* has the same meaning as set forth in section 3(a)(21) of the Act (15 U.S.C. 78c(a)(21)).

(17) The term *regulatory information* means any information collected by a national securities exchange in the course of performing its regulatory obligations under the Act.

(18) The term *regulatory subsidiary* means any person that, directly or indirectly, is controlled by the national securities exchange and that provides, whether pursuant to contract, agreement or rule, regulatory services to or on behalf of the national securities exchange.

(19) The term *related person* means, with respect to any member that is a broker or dealer:

(i) Any affiliate of the member;

(ii) Any person associated with the member;

(iii) Any immediate family member of the member, or any immediate family member of the member's spouse, who, in each case, has the same home as the member or who is a director or officer of the national securities exchange or facility or any of its parents or subsidiaries; and

(iv) Any immediate family member of a person associated with the member, or any immediate family member of such person's spouse, who, in each case, has the same home as the person associated with the member or who is a director or officer of the national securities exchange or facility or any of its parents or subsidiaries.

(20) The term *SRO trading facility* means any facility of a national securities exchange that executes orders in securities.

(21) The term *Standing Committees* means the following committees of the Board: Nominating Committee, Governance Committee, Compensation Committee, Audit Committee, and Regulatory Oversight Committee, or their equivalent.

(c) *Board.* (1) The Board of each national securities exchange must be composed of a majority of independent directors.

(2) No director may qualify as an independent director unless the Board affirmatively determines that the director has no material relationship with the national securities exchange or any affiliate of the national securities exchange. The Board must make this determination upon the director's nomination or appointment to the Board and thereafter no less frequently than annually and as often as necessary in light of the director's circumstances.

(3) The national securities exchange must establish policies and procedures to require each director, on his or her own initiative and upon request of the national securities exchange, to inform the national securities exchange of the existence of any relationship or interest that may reasonably be considered to bear on whether such director is an independent director.

(4) At least 20 percent of the total number of directors must be selected by members.

(5) At least one director must be representative of issuers and at least one director must be representative of investors, and, in each case, such

director must not be associated with a member or broker or dealer.

(6) When the Board considers any matter that is recommended by or otherwise is within the authority or jurisdiction of a Standing Committee, a majority of the directors who vote on the matter must be independent directors.

(7) The national securities exchange must adopt rules establishing a fair process for members to nominate an alternative candidate or candidates to the Board by petition and the percentage of members that is necessary to put forth such alternative candidate or candidates. The percentage of members that is necessary to put forth an alternative candidate or candidates must not exceed 10 percent of the total numbers of members.

(8) If the national securities exchange fails to comply with the requirement that the Board be composed of a majority of independent directors because there is a vacancy on the Board or a director ceases to be independent, it must comply with this requirement by the earlier of its next annual meeting or one year from the date of the occurrence of the event that caused the failure to comply with this requirement.

(9) The national securities exchange must establish procedures for interested persons to communicate their concerns regarding any matter within the authority or jurisdiction of a Standing Committee directly to the independent directors.

(d) *Executive session.* (1) Independent directors of the national securities exchange must meet regularly in executive session.

(2) The independent directors must have the authority to direct and supervise inquiries into any matter brought to their attention within the scope of their duties and to obtain advice and assistance from independent legal counsel and other advisors as they determine necessary to carry out their duties.

(3) The national securities exchange must provide sufficient funding and other resources, as determined by the independent directors, to permit the independent directors to fulfill their responsibilities and to retain independent legal counsel and other advisors.

(e) *Standing Committees of the Board.* (1) The national securities exchange, at a minimum, must have the following Standing Committees of the Board, or their equivalent: Nominating Committee, Governance Committee, Compensation Committee, Audit Committee, and Regulatory Oversight Committee. Each of these Standing Committees must report to the Board.

(2) Each Standing Committee must have the authority to direct and supervise inquiries into any matter brought to its attention within the scope of its duties, and to obtain advice and assistance from independent legal counsel and other advisors as it deems necessary to carry out its duties.

(3) The national securities exchange must provide sufficient funding and other resources, as determined by each Standing Committee, to permit the Standing Committees to fulfill their responsibilities and to retain independent legal counsel and other advisors.

(f) *Nominating Committee.* (1) The Nominating Committee must be composed solely of independent directors.

(2) The Nominating Committee must have a written charter that addresses the Nominating Committee's purpose and responsibilities, which, at a minimum, must be to identify individuals qualified to become Board members, consistent with criteria approved by the Board and administer a process for the nomination of individuals to the Board.

(3) The Nominating Committee must administer a fair process that provides members with the opportunity to select at least 20 percent of the total number of directors. The Nominating Committee must also administer the process established by the exchange under paragraph (c)(7) of this section for the nomination of an alternative candidate or candidates by members through petition.

(4) The Nominating Committee must nominate at least one director who is representative of issuers and at least one director who is representative of investors and who, in each case, is not associated with a member or broker or dealer.

(5) The Nominating Committee must conduct an annual performance self-evaluation.

(g) *Governance Committee.* (1) The Governance Committee must be composed solely of independent directors.

(2) The Governance Committee must have a written charter that addresses the Committee's purpose and responsibilities, which, at a minimum, must be to develop and recommend to the Board a set of governance principles applicable to the national securities exchange and to oversee the evaluation of the Board and management.

(3) The Governance Committee must conduct an annual performance evaluation of the governance of the national securities exchange, including the effectiveness of the Board and its committees.

(h) *Compensation Committee.* (1) The Compensation Committee must be composed solely of independent directors.

(2) The Compensation Committee must have a written charter that addresses the Compensation Committee's purpose and responsibilities, which, at a minimum, must be to have direct responsibility to review and approve corporate goals and objectives relevant to the compensation of the executive officers of the national securities exchange; evaluate the performance of the executive officers in light of those goals and objectives; and consider and approve recommendations with respect to the compensation level of the executive officers, based on this evaluation.

(3) The Compensation Committee must conduct an annual performance self-evaluation.

(i) *Audit Committee.* (1) The Audit Committee must be composed solely of independent directors.

(2) The Audit Committee must have a written charter that addresses the Audit Committee's purpose and responsibilities, which, at a minimum, must be to assist the Board in oversight of the integrity of the national securities exchange's financial statements; the national securities exchange's compliance with related legal and regulatory requirements; and the qualifications and independence of the national securities exchange's auditor, including direct responsibility for the hiring, firing, and compensation of the auditor; overseeing the auditor's engagement; meeting regularly in executive session with the auditor; reviewing the auditor's reports with respect to the national securities exchange's internal controls; pre-approving all audit and non-audit services performed by the auditor; determining the budget and staffing of the national securities exchange's internal audit department; and establishing procedures for the receipt of complaints regarding accounting, internal accounting controls, or auditing matters of the national securities exchange and the confidential submission by employees of the national securities exchange of concerns regarding questionable accounting or auditing matters.

(3) The Audit Committee must conduct an annual performance self-evaluation.

(j) *Regulatory Oversight Committee.* (1) The Regulatory Oversight Committee must be composed solely of independent directors.

(2) The Regulatory Oversight Committee must have a written charter that addresses the Regulatory Oversight Committee's purpose and responsibilities, which, at a minimum, must be to assure the adequacy and effectiveness of the regulatory program of the national securities exchange; assess the exchange's regulatory performance; determine the regulatory plan, programs, budget, and staffing for the regulatory functions of the exchange; assess the performance of, and recommend compensation and personnel actions involving, the Chief Regulatory Officer and other senior regulatory personnel to the Compensation Committee; monitor and review regularly with the Chief Regulatory Officer matters relating to the exchange's surveillance, examination, and enforcement units; assure that the exchange's disciplinary and arbitration proceedings are conducted in accordance with the exchange's rules and policies and any other applicable laws or rules, including those of the Commission; prior to the exchange's approval of an affiliated security for listing, certify that such security meets the exchange's rules for listing; and approve reports filed with the Commission as required by Regulation AL (§ 242.800 of this chapter).

(3) At least 20 percent of the members of any committee, subcommittee, or panel that is responsible for conducting hearings, rendering decisions, and imposing sanctions with respect to disciplinary matters must be members of the national securities exchange.

(4) Any committee, subcommittee, or panel that is responsible for conducting hearings, rendering decisions, and imposing sanctions with respect to disciplinary matters must be subject to the jurisdiction of the Regulatory Oversight Committee.

(5) The Regulatory Oversight Committee must oversee the preparation of the national securities exchange's annual regulatory report, as required by § 240.17a–26.

(6) The Regulatory Oversight Committee must conduct an annual performance self-evaluation.

(k) *Other committees of the Board.* (1) The national securities exchange may establish such other committees of the Board as it deems appropriate. However, if such committee has the authority to act on behalf of the Board, the committee must be composed of a majority of independent directors. The national securities exchange may not delegate to any committee not consisting solely of independent directors the authority to act on matters that otherwise are within the jurisdiction of a Standing Committee.

(2) At least 20 percent of the members of any committee must be members of the national securities exchange if such committee:

(i) Is not a Standing Committee, or is a committee, subcommittee, or panel that is subject to the jurisdiction of a Standing Committee; and

(ii) Is responsible for providing advice with respect to trading rules or disciplinary rules.

(l) *Other requirements applicable to directors and officers.* The rules of the national securities exchange must provide that:

(1) Any person subject to a statutory disqualification as defined in section 3(a)(39) of the Act (15 U.S.C. 78c(a)(39)) shall not be an officer or director of the exchange.

(2) Each director, in discharging his or her responsibilities as a member of the Board, must reasonably consider all requirements applicable to such exchange under the Act.

(m) *Separation of positions of Chairman of the Board and Chief Executive Officer.*

(1) If the Chief Executive Officer of the national securities exchange is not also the Chairman of the Board, the Chairman of the Board must be an independent director.

(2) The Chief Executive Officer must not participate in any executive sessions of the Board.

(3) If a single individual serves as both Chairman of the Board of the national securities exchange and the Chief Executive Officer, the Board must designate an independent director as a lead director to preside over executive sessions of the Board. The Board must publicly disclose such lead director's name and a means by which interested parties may communicate with the lead director.

(4) The Chairman of the Board of the national securities exchange must not serve on the Nominating, Governance, Compensation, Audit, or Regulatory Oversight Committees, unless the Chairman of the Board is an independent director.

(n) *Separation of regulatory and market operations.* (1) The national securities exchange must establish policies and procedures to assure the independence of its regulatory program from its market operations or other commercial interests.

(2) The national securities exchange's regulatory program must be:

(i) Structurally separated from the market operations and other commercial interests of the exchange, by means of separate legal entities; or

(ii) Functionally separated within the same legal entity from the market operations and other commercial interests of the exchange.

(3) The Board must appoint a Chief Regulatory Officer to administer the regulatory program of the national securities exchange. The Chief Regulatory Officer must report directly to the Regulatory Oversight Committee.

(4)(i) Any funds received by the national securities exchange from regulatory fees, fines, or penalties must be applied only to fund programs and operations directly related to such exchange's regulatory responsibilities; and

(ii) The national securities exchange must make and keep books and records necessary to demonstrate compliance with the requirement in paragraph (n)(4)(i) of this section.

(5)(i) A national securities exchange must establish policies and procedures reasonably designed to:

(A) Prevent the dissemination of regulatory information to any person other than an officer, director, employee, or agent of the exchange directly involved in carrying out the exchange's regulatory obligations under the Act;

(B) Prevent the use of regulatory information for any purpose other than carrying out the exchange's regulatory obligations under the Act; and

(C) Maintain the confidentiality of any information required to be submitted to effectuate a transaction on or through such exchange or its facilities, unless such information is aggregated to such an extent that no person whose information is included in the aggregated information can be identified, or unless the person has consented to the dissemination and use of its information by the exchange.

(ii) An exchange's policies and procedures must require its officers, directors, employees, and agents to agree to comply with the requirements of paragraph (n)(5)(i) of this section.

(o) *Limits on member ownership and voting.* (1) The rules of a national securities exchange must prohibit any member of such exchange that is a broker or dealer, alone or together with its related persons, from either:

(i) Beneficially owning, directly or indirectly, any interest in the national securities exchange or a facility of such exchange through which the member is permitted to effect transactions that exceeds 20 percent of any class of securities or other ownership interest of such national securities exchange or facility; or

(ii) Directly or indirectly voting, causing the voting of, or giving any

consent or proxy with respect to the voting of, any interest in the national securities exchange or a facility of such exchange through which the member is permitted to effect transactions that exceeds 20 percent of the voting power of any class of securities or other ownership interest of such national securities exchange or facility.

(2) The prohibition in paragraph (o)(1)(ii) shall not apply to any solicitation or receipt of a revocable proxy by any member that is a broker or dealer or its related persons from other shareholders of the national securities exchange or facility that is conducted pursuant to, and in accordance with, Regulation 14A under the Act (15 U.S.C. 78n), except that a member and its related persons may not conduct a solicitation or receive a proxy pursuant to § 240.14a–2(b)(2) with regard to or from a person or persons whose interest in the national securities exchange or facility, together with the member's and its related person's aggregate interest, would exceed the voting limitation in paragraph (o)(1) of this section.

(3) The rules of the national securities exchange must provide an effective mechanism to divest any member that is a broker or dealer and its related persons of any interest owned in excess of the ownership limitation in paragraph (o)(1) of this section.

(4) The rules of the national securities exchange must be reasonably designed to not give effect to the portion of a vote by a member that is a broker or dealer and its related persons that is in excess of the voting limitation in paragraph (o)(1) of this section.

(5) The rules of the national securities exchange must provide an effective mechanism for the national securities exchange to obtain information relating to ownership and voting interests in the national securities exchange or any facility of the national securities exchange from any owner of any interest.

(p) *Code of conduct and ethics.* (1) The rules of the national securities exchange must provide:

(i) For a code of conduct and ethics for directors, officers and employees that, at a minimum, establishes policies and procedures regarding: conflicts of interest; corporate opportunities; confidentiality; fair dealing; protection and proper use of the exchange's assets; compliance with laws, rules, and regulations by directors, officers and employees; and the reporting of illegal or unethical behavior; and

(ii) That any waiver of the code of conduct and ethics established under paragraph (p)(1)(i) of this section must be approved by the Board.

(2) The rules of the national securities exchange must prohibit any of its employees or officers from being a member of the board of directors of a listed issuer or member firm.

(q) *Governance guidelines.* The national securities exchange must adopt rules implementing governance guidelines that, at a minimum, establish policies regarding: director qualification standards; director responsibilities; director access to management and independent advisors; director compensation; director orientation and continuing education; management succession; and annual performance evaluations of the Board.

(r) *Implementation.* (1) The rules of each national securities exchange must be designed to meet the requirements of this section and must be operative no later than [one year following the date of publication of final rules in the **Federal Register**].

(2) Each national securities exchange must submit to the Commission a proposed rule change that complies with this section no later than [four months following the date of publication of final rules in the **Federal Register**].

(3) Each national securities exchange must have final rules that comply with this section approved by the Commission no later than [ten months following the date of publication of final rules in the **Federal Register**].

(s) *Exemptions.* (1) A national securities exchange registered pursuant to section 6(g)(1) of the Act (15 U.S.C. 78f(g)(1)) is exempt from the requirements of this section.

(2) Upon written request or on its own motion, the Commission may grant an exemption from any provision of this section, either unconditionally or on specified terms and conditions, if the Commission determines that such exemption is necessary or appropriate in the public interest and is consistent with the protection of investors.

§ 240.15Aa–1 [Amended]

5. Section 240.15Aa–1 is amended by revising the reference to ''Form X–15AA–1'' to read ''Form 2''.

§ 240.15Aj–1 [Removed]

6. Section 240.15Aj–1 is removed.

7. Section 240.15Aa–2 is added to read as follows:

§ 240.15Aa–2. Amendments to application.

(a) A registered securities association or an affiliated securities association shall file an amendment to Form 2, which shall set forth the nature and effective date of the action taken, and shall provide any new information and correct any information rendered inaccurate on Form 2, within 10 calendar days after any material event takes place that renders inaccurate, or that causes to be incomplete, any of the following:

(1) Information filed on the Execution Page of Form 2, or amendment thereto;

(2) Information filed as part of Exhibits C, D, E, H, I, J, K, M, N, O, P, S, or U and as part of Item 3 of Exhibit F or Items 1, 5, 6, and 7 of Exhibit Q, or any amendments thereto; or

(3) Information filed as part of Items 2 or 3 of Exhibit Q, or any amendment thereto, except that such information is not required to be filed with respect to any ownership change that is less than one percent from the ownership interest last reported on Form 2, or any amendment thereto.

(b) Within 60 days of the end of its fiscal year, a registered securities association or an affiliated securities association must submit an amendment to its Form 2 that updates the Form 2 in its entirety. Each Exhibit to the amended Form 2 shall be up to date as of the end of the latest fiscal year of the association.

(c) Except as set forth in paragraph (d) of this section, a registered securities association or an affiliated securities association must continuously post any amendments required to be filed under paragraphs (a) and (b) of this section on a publicly-accessible Internet web site controlled by the association, simultaneous with the filing of such information in paper form with the Commission. Only the most recent annual amendment filed under paragraph (b) of this section and any subsequent updates filed under paragraphs (a) of this section are required to be posted on such Internet web site. In its filing with the Commission, such association shall:

(1) Indicate the location of the Internet web site where such information may be found; and

(2) Certify that the information available at such location is accurate as of its date.

(d)(1) If the information required to be filed under paragraphs (a) or (b) of this section for Exhibits A, B, M, N, S, or T or Items 1–7 of Exhibit L is available continuously on an Internet web site controlled by an association, in lieu of filing such information in paper form with the Commission, such association may:

(i) Indicate the location of the Internet web site where such information may be found; and

(ii) Certify that the information available at such location is accurate as of its date.

(2) Only the most recent annual amendment required under paragraph (b) of this section and any subsequent updates required under paragraph (a) of this section must be continuously posted on an Internet web site controlled by an association under paragraph (d)(1) of this section.

(e) Upon written request or on its own motion, the Commission may grant an exemption from any of the requirements of this section, either unconditionally or on specified terms and conditions, if the Commission determines that such exemption is necessary or appropriate in the public interest and is consistent with the protection of investors.

(f) A registered securities association or an affiliated securities association shall file as an amendment to Form 2 a complete new statement together will all exhibits which are prescribed to be filed in connection with Form 2 no later than [six months following the date of publication of final rules in the **Federal Register**].

8. Section 240.15Aa–3 is added to read as follows:

§ 240.15Aa–3 Fair administration and governance of registered securities associations.

(a) *General.* Each association must comply with, and have rules that comply with, the provisions of this section, and must have the capacity to carry out the purposes of this section. If the association has a regulatory subsidiary, the provisions of paragraphs (c), (d), (e), (f), (g), (h), (i), (j), (k), (l), (m), (n), (p) and (q) of this section shall apply to such regulatory subsidiary in the same manner as the association; *provided, however,* that to the extent that a Standing Committee of the association is authorized to carry out responsibilities on behalf of the regulatory subsidiary, as set forth in its written charter, the regulatory subsidiary shall not be required to have a Standing Committee that performs the same responsibilities and to the extent that the Chief Regulatory Officer of the association performs the same responsibilities for the regulatory subsidiary as he or she does for the association, the regulatory subsidiary shall not be required to appoint a Chief Regulatory Officer. When used in paragraphs (c), (d), (e), (f), (g), (h), (i), (j), (k), (l), (m), (n), (p) and (q) of this section, the terms ''association'' shall also mean the regulatory subsidiary of the association; ''Board'' shall also mean the Board of the regulatory subsidiary; ''director'' or ''directors'' shall also mean the directors or directors of the regulatory subsidiary; ''independent director'' or ''independent directors'' shall also mean the independent director or independent directors of the regulatory subsidiary; ''executive session'' shall also mean executive session of the Board of the regulatory subsidiary; and ''Standing Committee'' or ''Standing Committees'' shall also mean the Standing Committee or Standing Committees of the Board of the regulatory subsidiary.

(b) *Definitions.* For purposes of this section, the following definitions shall apply:

(1) The term *affiliate* means any person that, directly or indirectly, controls, is controlled by, or is under common control with, the association.

(2) The term *affiliated issuer* means the association, an SRO trading facility of the association, an affiliate of the association, or an affiliate of an SRO trading facility of the association.

(3) The term *affiliated security* means any security issued by an affiliated issuer, except that it shall not include any option exempt from the Securities Act of 1933 under § 230.238 of this chapter and any security futures product exempt from the Securities Act of 1933 under section 3(a)(14) of the Securities Act of 1933 (15 U.S.C. 77c(a)(14)).

(4) The term *association* means any association registered under section 15A of the Act (15 U.S.C. 78*o*–3).

(5) The terms *beneficial ownership, beneficially owns* or any derivative thereof shall have the same meaning, with respect to any security or other ownership interest, as set forth in § 240.13d–3, as if (and whether or not) such security or other ownership interest were a voting equity security registered under section 12 of the Act (15 U.S.C. 78*l*); *provided that* to the extent any person beneficially owns any security or other ownership interest solely because such person is a member of a group within the meaning of section 13(d)(3) of the Act (15 U.S.C. 78m(d)(3)), such person shall not be deemed to beneficially own such security or other ownership interest for purposes of this section, unless such person has the power to direct the vote of such security or other ownership interest.

(6) The term *Board* means the Board of Directors or Board of Governors of the association, or any equivalent body.

(7) The term *compensation* means any form of compensation and any material perquisites awarded, or that are to be awarded, whether or not set forth in any written documents, to any executive officer of the association, including, without limitation, salary, bonus, pension, deferred compensation, compensation awarded pursuant to any incentive plan or equity-based plan, or any other plan, contract, authorization or arrangement pursuant to which cash or securities may be received.

(8) The term *control* means the possession, direct or indirect, of the power to direct or cause the direction of the management and policies of a person, whether through the ownership of voting securities, by contract, or otherwise. A person is presumed to control another person if the person:

(i) Is a director, general partner or officer exercising executive responsibility (or having similar status or functions);

(ii) Directly or indirectly has the right to vote 25 percent or more of a class of voting securities or has the power to sell or direct the sale of 25 percent or more of a class of voting securities; or

(iii) In the case of a partnership, has the right to receive, upon dissolution, or has contributed, 25 percent or more of the capital.

(9) The term *director* means any member of the Board.

(10) The term *executive session* means a meeting of the independent directors of the Board, without the presence of management of the association or the directors who are not independent directors.

(11) The term *facility* when used with respect to an association includes its premises, tangible or intangible property whether on the premises or not, any right to the use of such premises or property or any service thereof for the purpose of effecting or reporting a transaction (including, among other things, any system of communication to or from the association, by ticker or otherwise, maintained by or with the consent of the association), and any right of the association to the use of any property or service.

(12) The term *immediate family member* means a person's spouse, parents, children, and siblings, whether by blood, marriage or adoption, or anyone residing in such person's home.

(13) The term *independent director* means a director who has no material relationship with the association or any affiliate of the association, any member of the association or any affiliate of such member, or any issuer of securities that are listed or traded on a facility of the association. A director is not independent if any of the following circumstances exists:

(i) The director, or an immediate family member, is employed by or otherwise has a material relationship with the association or any affiliate of the association, or within the past three years was employed by or otherwise had a material relationship with the

association or any affiliate of the association.

(ii) The director is a member or is employed by or affiliated with a member or any affiliate of a member or, within the past three years was a member or was employed by or affiliated with a member or any affiliate of a member, or the director has an immediate family member that is, or within the past three years was, an executive officer of a member or any affiliate of a member.

(iii) The director, or an immediate family member, has received during any twelve month period within the past three years more than $60,000 in payments from the association or any affiliate of the association or from a member or any affiliate of a member, other than the following:

(A) Compensation for Board or Board committee service;

(B) Compensation to an immediate family member who is not an executive officer of the association or any affiliate of the association or of a member or any affiliate of a member; and

(C) Pension and other forms of deferred compensation for prior service, provided such compensation is not contingent in any way on continued service.

(iv) The director, or an immediate family member, is a partner in, or controlling shareholder or executive officer of any organization to which the association or any affiliate of the association made, or from which the association or any affiliate of the association received, payments for property or services in the current or any of the past three full fiscal years that exceed two percent of the recipient's consolidated gross revenues for that year, or $200,000, whichever is more, other than the following:

(A) Payments arising solely from investments in the securities of the association or any facility or affiliate of the association; or

(B) Payments under non-discretionary charitable contribution matching programs.

(v) The director, or an immediate family member, is, or within the past three years was, an executive officer of an issuer of securities listed or primarily traded on a facility of the association.

(vi) The director, or an immediate family member, is, or within the past three years was, employed as an executive officer of another entity where any of the association's executive officers serves on that entity's compensation committee.

(vii) The director, or an immediate family member, is a current partner of the outside auditor of the association or any affiliate of the association, or was a partner or employee of the outside auditor of the association or any affiliate of the association who worked on the association's or any affiliate's audit, at any time within the past three years.

(viii) In the case of a director that is a member of the Audit Committee, such director (other than in his or her capacity as a member of the Audit Committee, the Board, or any other Board committee), accepts, directly or indirectly, any consulting, advisory, or other compensatory fee from the association, any affiliate of the association, any member, or any affiliate of a member, other than fixed amounts of pension and other forms of deferred compensation for prior service, provided such compensation is not contingent in any way on continued service.

(14) The term *material relationship* means a relationship, whether compensatory or otherwise, that reasonably could affect the independent judgment or decision-making of the director.

(15) The term *member* has the same meaning as set forth in section 3(a)(3)(B) of the Act (15 U.S.C. 78c(a)(3)(B)).

(16) The term *person* has the same meaning as set forth in section 3(a)(9) of the Act (15 U.S.C. 78c(a)(9)).

(17) The term *person associated with a member* has the same meaning as set forth in section 3(a)(21) of the Act (15 U.S.C. 78c(a)(21)).

(18) The term *regulatory information* means any information collected by an association in the course of performing its regulatory obligations under the Act.

(19) The term *regulatory subsidiary* means any person that, directly or indirectly, is controlled by the association and that provides, whether pursuant to contract, agreement or rule, regulatory services to or on behalf of the association.

(20) The term *related person* means, with respect to any member:

(i) Any affiliate of the member;

(ii) Any person associated with the member;

(iii) Any immediate family member of the member, or any immediate family member of the member's spouse, who, in each case, has the same home as the member or who is a director or officer of the association or facility or any of its parents or subsidiaries; and

(iv) Any immediate family member of a person associated with the member, or any immediate family member of such person's spouse, who, in each case, has the same home as the person associated with the member or who is a director or officer of the association or facility or any of its parents or subsidiaries.

(21) The term *SRO trading facility* means any facility of an association that executes orders in securities.

(22) The term *Standing Committees* means the following committees of the Board: Nominating Committee, Governance Committee, Compensation Committee, Audit Committee, and Regulatory Oversight Committee, or their equivalent.

(c) *Board.* (1) The Board of each association must be composed of a majority of independent directors.

(2) No director may qualify as an independent director unless the Board affirmatively determines that the director has no material relationship with the association or any affiliate of the association. The Board must make this determination upon the director's nomination or appointment to the Board and thereafter no less frequently than annually and as often as necessary in light of the director's circumstances.

(3) The association must establish policies and procedures to require each director, on his or her own initiative and upon request of the association, to inform the association of the existence of any relationship or interest that may reasonably be considered to bear on whether such director is an independent director.

(4) At least 20 percent of the total number of directors must be selected by members.

(5) At least one director must be representative of issuers and at least one director must be representative of investors, and, in each case, such director must not be associated with a member or broker or dealer.

(6) When the Board considers any matter that is recommended by or otherwise is within the authority or jurisdiction of a Standing Committee, a majority of the directors who vote on the matter must be independent directors.

(7) The association must adopt rules establishing a fair process for members to nominate an alternative candidate or candidates to the Board by petition and the percentage of members that is necessary to put forth such alternative candidate or candidates. The percentage of members that is necessary to put forth an alternative candidate or candidates must not exceed 10 percent of the total numbers of members.

(8) If the association fails to comply with the requirement that the Board be composed of a majority of independent directors because there is a vacancy on the Board or a director ceases to be independent, it must comply with this requirement by the earlier of its next annual meeting or one year from the date of the occurrence of the event that

caused the failure to comply with this requirement.

(9) The association must establish procedures for interested persons to communicate their concerns regarding any matter within the authority or jurisdiction of a Standing Committee directly to the independent directors.

(d) *Executive session.* (1) Independent directors of the association must meet regularly in executive session.

(2) The independent directors must have the authority to direct and supervise inquiries into any matter brought to their attention within the scope of their duties and to obtain advice and assistance from independent legal counsel and other advisors as they determine necessary to carry out their duties.

(3) The association must provide sufficient funding and other resources, as determined by the independent directors, to permit the independent directors to fulfill their responsibilities and to retain independent legal counsel and other advisors.

(e) *Standing Committees of the Board.* (1) The association, at a minimum, must have the following Standing Committees of the Board, or their equivalent: Nominating Committee, Governance Committee, Compensation Committee, Audit Committee, and Regulatory Oversight Committee. Each of these Standing Committees must report to the Board.

(2) Each Standing Committee must have the authority to direct and supervise inquiries into any matter brought to its attention within the scope of its duties, and to obtain advice and assistance from independent legal counsel and other advisors as it deems necessary to carry out its duties.

(3) The association must provide sufficient funding and other resources, as determined by each Standing Committee, to permit the Standing Committees to fulfill their responsibilities and to retain independent legal counsel and other advisors.

(f) *Nominating Committee.* (1) The Nominating Committee must be composed solely of independent directors.

(2) The Nominating Committee must have a written charter that addresses the Nominating Committee's purpose and responsibilities, which, at a minimum, must be to identify individuals qualified to become Board members, consistent with criteria approved by the Board and administer a process for the nomination of individuals to the Board.

(3) The Nominating Committee must administer a fair process that provides members with the opportunity to select at least 20 percent of the total number of directors. The Nominating Committee must also administer the process established by the association under paragraph (c)(7) of this section for the nomination of an alternative candidate or candidates by members through petition.

(4) The Nominating Committee must nominate at least one director who is representative of issuers and at least one director who is representative of investors and who, in each case, is not associated with a member or broker or dealer.

(5) The Nominating Committee must conduct an annual performance self-evaluation.

(g) *Governance Committee.* (1) The Governance Committee must be composed solely of independent directors.

(2) The Governance Committee must have a written charter that addresses the Committee's purpose and responsibilities, which, at a minimum, must be to develop and recommend to the Board a set of governance principles applicable to the association and to oversee the evaluation of the Board and management.

(3) The Governance Committee must conduct an annual performance evaluation of the governance of the association, including the effectiveness of the Board and its committees.

(h) *Compensation Committee.* (1) The Compensation Committee must be composed solely of independent directors.

(2) The Compensation Committee must have a written charter that addresses the Compensation Committee's purpose and responsibilities, which, at a minimum, must be to have direct responsibility to review and approve corporate goals and objectives relevant to the compensation of the executive officers of the association; evaluate the performance of the executive officers in light of those goals and objectives; and consider and approve recommendations with respect to the compensation level of the executive officers, based on this evaluation.

(3) The Compensation Committee must conduct an annual performance self-evaluation.

(i) *Audit Committee.* (1) The Audit Committee must be composed solely of independent directors.

(2) The Audit Committee must have a written charter that addresses the Audit Committee's purpose and responsibilities, which, at a minimum, must be to assist the Board in oversight of the integrity of the association's financial statements; the association's compliance with related legal and regulatory requirements; and the qualifications and independence of the association's auditor, including direct responsibility for the hiring, firing, and compensation of the auditor; overseeing the auditor's engagement; meeting regularly in executive session with the auditor; reviewing the auditor's reports with respect to the association's internal controls; pre-approving all audit and non-audit services performed by the auditor; determining the budget and staffing of the association's internal audit department; and establishing procedures for the receipt of complaints regarding accounting, internal accounting controls, or auditing matters of the association and the confidential submission by employees of the association of concerns regarding questionable accounting or auditing matters.

(3) The Audit Committee must conduct an annual performance self-evaluation.

(j) *Regulatory Oversight Committee.* (1) The Regulatory Oversight Committee must be composed solely of independent directors.

(2) The Regulatory Oversight Committee must have a written charter that addresses the Regulatory Oversight Committee's purpose and responsibilities, which, at a minimum, must be to assure the adequacy and effectiveness of the regulatory program of the association; assess the association's regulatory performance; determine the regulatory plan, programs, budget, and staffing for the regulatory functions of the association; assess the performance of, and recommend compensation and personnel actions involving, the Chief Regulatory Officer and other senior regulatory personnel to the Compensation Committee; monitor and review regularly with the Chief Regulatory Officer matters relating to the association's surveillance, examination, and enforcement units; assure that the association's disciplinary and arbitration proceedings are conducted in accordance with the association's rules and policies and any other applicable laws or rules, including those of the Commission; prior to the association's approval of an affiliated security for listing, certify that such security meets the association's rules for listing; and approve reports filed with the Commission as required by Regulation AL (§ 242.800 of this chapter).

(3) At least 20 percent of the members of any committee, subcommittee, or panel that is responsible for conducting hearings, rendering decisions, and

imposing sanctions with respect to disciplinary matters must be members of the association.

(4) Any committee, subcommittee, or panel that is responsible for conducting hearings, rendering decisions, and imposing sanctions with respect to disciplinary matters must be subject to the jurisdiction of the Regulatory Oversight Committee.

(5) The Regulatory Oversight Committee must oversee the preparation of the association's annual regulatory report, as required by § 240.17a–26.

(6) The Regulatory Oversight Committee must conduct an annual performance self-evaluation.

(k) *Other committees of the Board.* (1) The association may establish such other committees of the Board as it deems appropriate. However, if such committee has the authority to act on behalf of the Board, the committee must be composed of a majority of independent directors. The association may not delegate to any committee not consisting solely of independent directors the authority to act on matters that otherwise are within the jurisdiction of a Standing Committee.

(2) At least 20 percent of the members of any committee must be members of the association if such committee:

(i) Is not a Standing Committee, or is a committee, subcommittee, or panel that is subject to the jurisdiction of a Standing Committee; and

(ii) Is responsible for providing advice with respect to trading rules or disciplinary rules.

(l) *Other requirements applicable to directors and officers.* The rules of the association must provide that:

(1) Any person subject to a statutory disqualification as defined in section 3(a)(39) of the Act (15 U.S.C. 78c(a)(39)) shall not be an officer or director of the association.

(2) Each director, in discharging his or her responsibilities as a member of the Board, must reasonably consider all requirements applicable to such association under the Act.

(m) *Separation of positions of Chairman of the Board and Chief Executive Officer.* (1) If the Chief Executive Officer of the association is not also the Chairman of the Board, the Chairman of the Board must be an independent director.

(2) The Chief Executive Officer must not participate in any executive sessions of the Board.

(3) If a single individual serves as both Chairman of the Board of the association and the Chief Executive Officer, the Board must designate an independent director as a lead director to preside over executive sessions of the Board. The Board must publicly disclose such lead director's name and a means by which interested parties may communicate with the lead director.

(4) The Chairman of the Board of the association must not serve on the Nominating, Governance, Compensation, Audit, or Regulatory Oversight Committees, unless the Chairman of the Board is an independent director.

(n) *Separation of regulatory and market operations.* (1) The association must establish policies and procedures to assure the independence of its regulatory program from its market operations or other commercial interests.

(2) The association's regulatory program must be:

(i) Structurally separated from the market operations and other commercial interests of the association, by means of separate legal entities; or

(ii) Functionally separated within the same legal entity from the market operations and other commercial interests of the association.

(3) The Board must appoint a Chief Regulatory Officer to administer the regulatory program of the association. The Chief Regulatory Officer must report directly to the Regulatory Oversight Committee.

(4)(i) Any funds received by the association from regulatory fees, fines, or penalties must be applied only to fund programs and operations directly related to such association's regulatory responsibilities; and

(ii) The association must make and keep books and records necessary to demonstrate compliance with the requirement in paragraph (n)(4)(i) of this section.

(5)(i) An association must establish policies and procedures reasonably designed to:

(A) Prevent the dissemination of regulatory information to any person other than an officer, director, employee, or agent of the association directly involved in carrying out the association's regulatory obligations under the Act;

(B) Prevent the use of regulatory information for any purpose other than carrying out the association's regulatory obligations under the Act; and

(C) Maintain the confidentiality of any information required to be submitted to effectuate a transaction on or through such association or its facilities, unless such information is aggregated to such an extent that no person whose information is included in the aggregated information can be identified, or unless the person has consented to the dissemination and use of its information by the association.

(ii) An association's policies and procedures must require its officers, directors, employees, and agents to agree to comply with the requirements of paragraph (n)(5)(i) of this section.

(o) *Limits on member ownership and voting.* (1) The rules of an association must prohibit any member of such association, alone or together with its related persons, from either:

(i) Beneficially owning, directly or indirectly, any interest in the association or a facility of such association through which the member is permitted to effect transactions that exceeds 20 percent of any class of securities or other ownership interest of such association or facility; or

(ii) Directly or indirectly voting, causing the voting of, or giving any consent or proxy with respect to the voting of, any interest in the association or a facility of such association through which the member is permitted to effect transactions that exceeds 20 percent of the voting power of any class of securities or other ownership interest of such association or facility.

(2) The prohibition in paragraph (o)(1)(ii) shall not apply to any solicitation or receipt of a revocable proxy by any member or its related persons from other shareholders of the association or facility that is conducted pursuant to, and in accordance with, Regulation 14A under the Act (15 U.S.C. 78n), except that a member and its related persons may not conduct a solicitation or receive a proxy pursuant to § 240.14a–2(b)(2) with regard to or from a person or persons whose interest in the association or facility, together with the member's and its related person's aggregate interest, would exceed the voting limitation in paragraph (o)(1) of this section.

(3) The rules of the association must provide an effective mechanism to divest any member and its related persons of any interest owned in excess of the ownership limitation in paragraph (o)(1) of this section.

(4) The rules of the association must be reasonably designed to not give effect to the portion of a vote by a member and its related persons that is in excess of the voting limitation in paragraph (o)(1) of this section.

(5) The rules of the association must provide an effective mechanism for the association to obtain information relating to ownership and voting interests in the association or any facility of the association from any owner of any interest.

(p) *Code of conduct and ethics.* (1) The rules of the association must provide:

(i) For a code of conduct and ethics for directors, officers and employees that, at a minimum, establishes policies and procedures regarding: conflicts of interest; corporate opportunities; confidentiality; fair dealing; protection and proper use of the association's assets; compliance with laws, rules, and regulations by directors, officers and employees; and the reporting of illegal or unethical behavior; and

(ii) That any waiver of the code of conduct and ethics established under paragraph (p)(1)(i) of this section must be approved by the Board.

(2) The rules of the association must prohibit any of its employees or officers from being a member of the board of directors of a listed issuer or member firm.

(q) *Governance guidelines.* The association must adopt rules implementing governance guidelines that, at a minimum, establish policies regarding: director qualification standards; director responsibilities; director access to management and independent advisors; director compensation; director orientation and continuing education; management succession; and annual performance evaluations of the Board.

(r) *Implementation.* (1) The rules of each association must be designed to meet the requirements of this section and must be operative no later than [one year following the date of publication of final rules in the **Federal Register**].

(2) Each association must submit to the Commission a proposed rule change that complies with this section no later than [four months following the date of publication of final rules in the **Federal Register**].

(3) Each association must have final rules that comply with this section approved by the Commission no later than [ten months following the date of publication of final rules in the **Federal Register**].

(s) *Exemptions.* (1) A limited purpose national securities association registered pursuant to section 15A(k)(1) of the Act (15 U.S.C. 78*o*–3(k)(1)), is exempt from the requirements of this section.

(2) Upon written request or on its own motion, the Commission may grant an exemption from any provision of this section, either unconditionally or on specified terms and conditions, if the Commission determines that such exemption is necessary or appropriate in the public interest and is consistent with the protection of investors.

9. Section 240.17a–1 is amended by revising paragraph (b) to read as follows:

§ 240.17a–1 Recordkeeping rule for national securities exchanges, national securities associations, registered clearing agencies and the Municipal Securities Rulemaking Board.

* * * * *

(b) Every national securities exchange, national securities association, registered clearing agency and the Municipal Securities Rulemaking Board shall keep all such documents for a period of not less than five years at a place within the United States, the first two in an easily accessible place, subject to the destruction and disposition provisions in § 240.17a-6.

* * * * *

10. Section 240.17a–26 is added to read as follows:

§ 240.17a–26 Regulatory reports of national securities exchanges and registered securities associations.

(a)(1) *Quarterly and annual reports.* Every national securities exchange and every registered securities association must file with the Commission reports, in electronic format, prepared by the exchange or association containing the information required by paragraph (b) of this section. Unless otherwise noted, the information specified in paragraph (b)(2) of this section must be filed on a quarterly basis within 20 business days after the end of each calendar quarter. In addition, an annual report containing the information specified in paragraphs (a)(2), (b)(2)(i) through (b)(2)(vii), and (b)(3) of this section must be filed on an annual basis within 60 calendar days after the year end.

(2) *Electronic SRO trading facilities.* Every national securities exchange and registered securities association that owns, operates, or sponsors an electronic SRO trading facility must file, as part of the annual report, a report of an independent audit designed to assess whether the operations of any electronic SRO trading facility of the exchange or association comply with the rules governing such facility. The report must be prepared by a third party not affiliated with the exchange or association that is qualified to render an opinion on such matters.

(b)(1)(i) *Scope.* The quarterly and annual reports required by paragraph (a) of this section must include the information specified in paragraphs (b)(2) and (b)(3) of this section, relating to the regulatory program of the national securities exchange or registered securities association and any affiliate, including any surveillance, examination, and disciplinary programs. In the event that the exchange or association has entered into a contract or agreement with a regulatory subsidiary or with another self-regulatory organization pursuant to which such regulatory subsidiary or other self-regulatory organization provides regulatory services to or on behalf of the exchange or association, the information required by paragraph (b) of this section must include the information relating to the regulatory subsidiary's or other self-regulatory organization's activities on behalf of the exchange or association. In addition, the quarterly and annual reports must contain information, including surveillance reporting, both for those members for which the exchange or association is the designated examining authority and for any other members that use any facility of the exchange or association.

(ii) *Uniform format.* Every national securities exchange and registered securities association subject to this section shall establish procedures for the preparation of the quarterly and annual reports required by this section in a uniform, readily accessible, and usable electronic format, review the reporting procedures from time to time to evaluate their efficacy, and revise the procedures as necessary.

(2) *Quarterly reports.* The following information must be filed with the Commission by every national securities exchange and registered securities association on a quarterly basis:

(i) Results of the surveillance programs, both manual and automated, during the reporting period, including, but not limited to: The number of exception reports and alerts generated, sorted by applicable rule or category; the number of exception reports and alerts reviewed by the exchange or association; and the number of exception reports and alerts closed or referred for further investigation or for enforcement proceedings;

(ii) Results of surveillance programs relating to financial and operational requirements of members and other entities over which the exchange or association exercises examining authority during the reporting period, including, but not limited to: A list of member firms with net capital computation errors exceeding ten percent of excess net capital, using a unique identifier specific to the member firm to identify such member firm, and a factual description of any action taken by the exchange or association in response thereto; a list of member firms that filed late reports on Form X–17A–5 under § 240.17a–5(a), using a unique identifier specific to the member firm to identify such member firm, and a factual description of any action taken by the exchange or association in

response thereto; and a list of member firms that filed amendments to their reports on Form X–17A–5 under § 240.17a–5(a), using a unique identifier specific to the member firm to identify such member firm, and a factual description of any action taken by the exchange or association in response thereto;

(iii) A summary of all complaints relating to the exchange's or association's regulatory program received during the reporting period from any source, grouped by subject matter and using a unique identifier specific to the member and any associated person(s) involved; and including the date the complaint was received; the type of source from which the complaint originated; and a factual description of any response or action taken by the exchange or association in response to the complaint, including any disposition of the matter and the date of any response;

(iv) A summary of all investigations opened, closed, and pending during the reporting period including the aggregate number of investigations for each such category, and a summary of the facts of each investigation including, but not limited to: The member firm and any associated person(s) under review using a unique identifier specific to the member firm and associated person(s) under review; a factual description of any alleged violations; the type of source that led to the investigation; a factual description of the matter under investigation and the relevant security symbol or specific type of security involved; the date of the occurrence of the matter under investigation and the date it was reported or detected; the date the investigation was opened and, as applicable, closed; the length of time the investigation has been or was open; and, if applicable, a factual description of the recommendations and disposition of the investigation. In addition, the report should include a summary of the number of investigations conducted during the reporting period and the average elapsed time, in days, for all investigations closed during the reporting period;

(v) A summary of all examinations opened, closed, and pending during the reporting period including the aggregate number of examinations for each such category, and a summary of the facts of each examination including, but not limited to: A list of the members examined during the reporting period using a unique identifier specific to the member firm; the frequency with which each such member is examined; the type of examination, including whether the examination was a cycle or for-cause examination and a factual description of any reasons for a cause examination; whether the examination was of a new member and, if so, the date the member was registered under the Act and the date the examination of the new member commenced; a factual description of the scope and subject matter of such examination; the date the examination was opened and, as applicable, closed; the length of time the examination has been or was open; whether the examination included an on-site branch examination; a factual description of any potential violations; and, if applicable, a factual description of the recommendations and disposition of the examination. In addition, the report should include a summary of the number of examinations conducted during the reporting period and the average elapsed time, in days, for all examinations closed during the reporting period;

(vi) A summary of all enforcement cases opened, closed, and pending during the reporting period including the aggregate number of enforcement cases in each category, grouped by subject matter, and a summary of the facts of each case including, but not limited to: The member firm and any associated person(s) under review using a unique identifier specific to the member firm and associated person(s) under review; the type of source that led to the case; a factual description of any alleged violations and, as applicable, the relevant security symbol or specific type of security involved; the date of the occurrence of any alleged violations and the date they were reported or detected; the date the enforcement case was opened and, as applicable, closed; the length of time the case has been or was open; and, if applicable, a factual description of the disposition of the case, including whether the case was settled and any sanctions imposed. In addition, the report should include a summary of the number of enforcement cases conducted during the reporting period and the average elapsed time, in days, for all enforcement cases closed during the reporting period;

(vii) A summary of listings information during the reporting period, including, but not limited to: A list of all securities that were newly listed or were delisted during the reporting period, including the name, symbol, and issuer; a list of all issuers to whom the exchange or association, or a facility thereof, sent during the reporting period a notice alleging that such issuer does not satisfy a rule or standard for continued listing on the exchange or association, or a facility thereof, and, in the case of an exchange, a notice that the exchange has submitted an application under § 240.12d–2 to the Commission to delist a class of the issuer's securities, or, in the case of an association, a notice that the association has taken all necessary steps under it rules to delist the security from its facility; a list of all issuers, using unique identifiers, alleged to not satisfy a rule or standard for continued listing and any action taken with respect to any listed issuer that allegedly failed to satisfy any rule or standard for continued listing; and a list of any issuers, using unique identifiers, that are alleged to have failed to file timely quarterly or annual reports. The summary must set forth the rule or standard for continued listing that the issuer is alleged to have failed to satisfy and the date when the issuer was alleged to have failed to satisfy any rule or standard for continued listing; and the status of any compliance plan for the issuer, including any alleged failure by the issuer to satisfy the requirements of the compliance plan. In addition, for listed options, the report should include a list and a factual description of the circumstances surrounding options classes or series that were improperly listed; and

(viii) Copies of the final agenda of any meeting of the board and of any executive board of the exchange or association, or of any committee of the board or executive board, that occurred during the reporting period.

(3) *Annual report.* In addition to a year-end cumulative presentation of the information specified in paragraph (b)(2)(i) through (b)(2)(vii), and the information specified in paragraph (a)(2), the following information must be filed with the Commission by every national securities exchange and registered securities association as part of the annual report:

(i) A complete discussion of the internal policies and procedures for carrying out the regulatory responsibilities of the exchange or association, including a discussion of the overall program of surveillance and enforcement and any new, revised, or terminated surveillance programs along with a discussion of the reasons for any change. In addition, the exchange or association must submit as part of the annual report a chart indicating by group or section the regulatory activities performed by such group or section, the number of staff involved in each group or section, the names of the staff responsible for such regulatory activities, and the names of the supervisors of each group or section;

(ii) An evaluation of the effectiveness of the exchange's or association's

regulatory programs in effect during the reporting period, including a discussion of the overall operation and effectiveness of the regulatory program; the particular strengths and weaknesses of the regulatory program; areas in which the regulatory program needs to be improved; and any planned revisions to the regulatory program in response to any weaknesses, including those weaknesses uncovered during the process of preparing the annual and quarterly reports required by this section;

(iii) A complete discussion of the internal controls implemented by the exchange or association that are designed to detect, prevent, and control for any conflicts of interest between the market operations and other commercial interests of the exchange or association and its self-regulatory responsibilities, and to assure that the exchange or association appropriately carries out its self-regulatory responsibilities;

(iv) A complete discussion of the exchange's or association's employment arrangements with its Chief Regulatory Officer and other senior regulatory program personnel;

(v) Copies of the most recent annual performance self-evaluation of each standing committee of the board of a national securities exchange or registered securities association, as well as the annual governance performance evaluation prepared by each exchange's or association's Governance Committee, as set forth in § 240.6a–5 and § 240.15Aa–3; and

(vi) A complete discussion of the exchange or association's efforts to comply with any recommendations or plan resulting from any inspection or examination conducted by the Commission's staff.

(c) *Certifications.* The reports provided for in paragraph (a) of this section, as well as any supplement provided for in paragraph (d) of this section, must be accompanied by a certification, executed by an exchange's or association's chief executive officer on behalf of, and with the authority of, the exchange or association, representing that the information contained in the respective report or amendment is current, true, and complete as of the date filed with the Commission.

(d)(1) *Interim changes to the regulatory program.* Any material change to the regulatory program of a national securities exchange or registered securities association, or any material developments that affect such regulatory program, including any changes to the parameters used in surveilling for and enforcing compliance with the federal securities laws and rules and regulations thereunder and the exchange's or association's rules, including any new, revised, or terminated surveillance and enforcement programs that occurred since the filing of the prior quarterly report required by this section, must be reported in a supplemental filing with the Commission within ten business days of such change, along with a discussion of the reasons for such change.

(2) *Interim changes to the regulatory department or unit.* Any material change to the organization or staffing of any regulatory or supervisory department or unit must be reported in a supplemental filing with the Commission within ten business days of such change, along with a discussion of the reasons for such change.

(e) *Confidentiality.* All information submitted pursuant to this section will be accorded confidential treatment to the extent permitted by law.

(f) *Compliance date.* Every national securities exchange and national securities association must comply with this section beginning with the first full quarterly reporting period commencing [six months from the date of publication of the final rule in the **Federal Register**].

(g) *Extensions.* Upon written request or on its own motion, the Commission may grant an extension of time for filing any reports or materials required by this section, if the Commission determines that such extension is necessary or appropriate in the public interest and is consistent with the protection of investors.

(h)(1) *Exemptions.* Upon written request or on its own motion, the Commission may grant an exemption from any of the requirements of this section, either unconditionally or on specified terms and conditions, if the Commission determines that such exemption is necessary or appropriate in the public interest and is consistent with the protection of investors.

(2) A national securities exchange registered pursuant to section 6(g) of the Act (15 U.S.C. 78f(g)), and a limited purpose national securities association registered pursuant to section 15A(k)(1) of the Act (15 U.S.C. 78*o*–3(k)(1)) are exempt from the requirements of this section.

(i) Each report filed pursuant to this section shall constitute a ''report'' within the meaning of sections 17(a), 18(a), and 32(a) of the Act (15 U.S.C. 78q(a), 78r(a), and 78ff(a)), and any other applicable provisions of the Act.

(j) *Definitions.* For purposes of this section,

(1) The term *Act* means the Securities Exchange Act of 1934.

(2) The term *board* means the Board of Directors or Board of Governors of a national securities exchange or registered securities association, or any equivalent body.

(3) The term *electronic SRO trading facility* means a facility of an exchange or association that executes orders in securities on an electronic basis.

(4) The term *facility* has the same meaning as set forth in section 3(a)(2) of the Act (15 U.S.C. 78c(a)(2)), or § 240.15Aa–3, as applicable.

(5) The term *regulatory subsidiary* means any person that, directly or indirectly, is controlled by the national securities exchange or registered securities association and that provides, whether pursuant to contract, agreement or rule, regulatory services to or on behalf of the national securities exchange or registered securities association.

(6) The term *standing committee* has the same meaning as defined in § 240.6a–5(b)(21) for a national securities exchange and in § 240.15Aa–3(b)(22) for a registered securities association.

11. Section 240.17a–27 is added to read as follows:

§ 240.17a–27 Ownership of a national securities exchange, registered securities association, or facility of a national securities exchange or registered securities association.

(a) *Definitions.* (1) The term *Act* means the Securities Exchange Act of 1934.

(2) The term *affiliate* means, with respect to any person, any other person that directly or indirectly controls, is controlled by, or is under common control with, the person.

(3) The terms *beneficial ownership, beneficially owns* or any derivative thereof shall have the same meaning, with respect to any security or other ownership interest, as set forth in § 240.13d–3, as if (and whether or not) such security or other ownership interest were a voting equity security registered under section 12 of the Act (15 U.S.C. 78*l*); *provided that* to the extent any person beneficially owns any security or other ownership interest solely because such person is a member of a group within the meaning of section 13(d)(3) of the Act (15 U.S.C. 78m(d)(3)), such person shall not be deemed to beneficially own such security or other ownership interest for purposes of this section, unless such person has the power to direct the vote of such security or other ownership interest.

(4) The term *class of securities of a disclosure entity* means the outstanding

securities of such class, exclusive of any securities of such class held by or for the account of the disclosure entity or a subsidiary of the disclosure entity.

(5) The term *control* means the possession, direct or indirect, of the power to direct or cause the direction of the management and policies of a person, whether through the ownership of voting securities, by contract, or otherwise. A person is presumed to control another person if the person:

(i) Is a director, general partner or officer exercising executive responsibility (or having similar status or functions);

(ii) Directly or indirectly has the right to vote 25 percent or more of a class of voting securities or has the power to sell or direct the sale of 25 percent or more of a class of voting securities; or

(iii) In the case of a partnership, has the right to receive, upon dissolution, or has contributed, 25 percent or more of the capital.

(6) The term *disclosure entity* means, with respect to a member,

(i) A national securities exchange of which it is a member, other than an exchange registered pursuant to section 6(g) of the Act (15 U.S.C. 78f(g));

(ii) A registered securities association of which it is a member, other than a limited purpose national securities association registered pursuant to section 15A(k)(1) of the Act (15 U.S.C. 78*o*–3(k)(1)); and

(iii) A facility of such national securities exchange or registered securities association through which it is permitted to effect transactions.

(7) The term *facility* shall have the meaning in section 3(a)(2) of the Act (15 U.S.C. 78c(a)(2)) or § 240.15Aa–3, as applicable.

(8) The term *immediate family member* means a person's spouse, parents, children, and siblings, whether by blood, marriage, or adoption, or anyone residing in such person's home.

(9) The term *member* shall have the meaning set forth in section 3(a)(3) of the Act (15 U.S.C. 78c(a)(3)).

(10) The term *national securities exchange* means any exchange registered pursuant to section 6 of the Act (15 U.S.C. 78g).

(11) The term *person* shall have the meaning in section 3(a)(9) of the Act (15 U.S.C. 78c(a)(9)).

(12) The term *registered securities association* means any association of brokers and dealers registered pursuant to section 15A of the Act (15 U.S.C. 78*o*–3).

(13) The term *related person* means, with respect to any member that is a broker or dealer:

(i) Any affiliate of the member;

(ii) Any person associated with the member;

(iii) Any immediate family member of such member, or any immediate family member of the member's spouse, who, in each case, has the same home as the member or who is a director or officer of the disclosure entity or any of its parents or subsidiaries; and

(iv) Any immediate family member of a person associated with the member, or any immediate family member of that person's spouse, who, in each case, has the same home as the person associated with the member or who is a director or officer of the disclosure entity or any of its parents or subsidiaries.

(14) The term *share* means a share of stock in a corporation or unit of interest in an unincorporated person.

(b)(1) *Filing requirement.* A member of a national securities exchange or registered securities association that is a broker or dealer must file with the Commission a statement containing the information required by paragraph (b)(2) of this section if such member, directly or indirectly, alone or together with its related persons, beneficially owns more than five percent of any class of securities or other ownership interest in a disclosure entity.

(2) *Required information.* A statement that a member is required to file under paragraph (b)(1) of this section must include the following:

(i) The title of the class of securities or other ownership interest for which the member is required to file this statement, and the identity and form of organization (*e.g.* LLC) of the disclosure entity;

(ii) If the member is a corporation, general partnership, limited partnership, syndicate or other group of persons, its name, the state or other place of its organization, its principal business, the address of its principal business, and the address of its principal office;

(iii) If the member is a natural person, his or her name, residence or business address, present principal occupation or employment, and the name, principal business and address of any corporation or other organization in which such employment is conducted;

(iv) A description of the securities or other ownership interest that are the subject of the filing, including:

(A) The total number of securities or other ownership interests issued and outstanding in each class or series;

(B) If the securities are publicly traded, the market(s) where they trade;

(C) Any restrictions on ownership, voting, transfers, or other disposition of such securities or other ownership interest; and

(D) Any other material provisions relating to ownership of the disclosure entity;

(v) Whether such disclosure entity is a reporting issuer under section 12 of the Act (15 U.S.C. 78*l*);

(vi)(A) The aggregate number and percentage of shares of a class of securities or other ownership interest in such disclosure entity that are beneficially owned by the member;

(B) The aggregate number of shares or ownership interest as to which the member:

(*1*) Has the sole power to vote or to direct the vote;

(*2*) Has shared power to vote or to direct the vote;

(*3*) Has sole power to dispose or to direct the disposition;

(*4*) Has shared power to dispose or to direct the disposition; and

(C) If any other person is known to have the right to receive or the power to direct the receipt of dividends from, or the proceeds from the sale of, such securities or other ownership interest, a statement to that effect should be included in response to this section and, if such interest relates to more than five percent of the securities or other ownership interest, such person should be identified; provided that, a listing of the shareholders of an investment company registered under the Investment Company Act of 1940 or the beneficiaries of an employee benefit plan, pension fund or endowment fund is not required.

(vii) Separately identify each related person whose ownership in a disclosure entity is included in the calculation of beneficial ownership required to be disclosed by the member pursuant to this paragraph (b) and state the aggregate number and percentage of shares of a class of securities or other ownership interest in such disclosure entity that are beneficially owned by the related person. For each related person identified provide the following information:

(A) Indicate the aggregate number of shares or ownership interest as to which the related person:

(*1*) Has the sole power to vote or to direct the vote;

(*2*) Has shared power to vote or to direct the vote;

(*3*) Has sole power to dispose or to direct the disposition;

(*4*) Has shared power to dispose or to direct the disposition; and

(B) If any other person is known to have the right to receive or the power to direct the receipt of dividend from, or the proceeds from the sale of, such securities or other ownership interest, a statement to that effect should be

included in response to this provision and, if such interest relates to more than five percent of the securities or other ownership interest, such person should be identified; provided that, a listing of the shareholders of an investment company registered under the Investment Company Act of 1940 or the beneficiaries of an employee benefit plan, pension fund or endowment fund is not required;

(viii) For each member and its related persons, indicate whether and how such member, alone or together with its related persons, possesses the power, directly or indirectly, to direct or cause the direction of the management and policies of the disclosure entity, whether through ownership of voting securities, by contract, or otherwise;

(ix) Specifically describe the ability of each member and its related persons, through governance provisions or otherwise, to exercise any influence or control over the regulatory responsibilities of the exchange or association; and

(x) A description of any contracts, arrangements, understandings or relationships (legal or otherwise) among the member and its related persons and between such persons and any other person with respect to any securities or other ownership interest of the disclosure entity, including but not limited to transfer or voting of any of the securities or other ownership interest, finder's fees, joint ventures, loan or option arrangements, put or calls, guarantees of profits, division of profits or loss, or the giving or withholding of proxies. Name the persons with whom such contracts, arrangements, understandings or relationships have been entered into. Include such information for any of the securities or other ownership interest that are pledged or otherwise subject to a contingency the occurrence of which would give another person voting power or investment power over such securities or interest except that disclosure of standard default and similar provisions contained in loan agreements need not be included.

(3) *Timing of initial filing.* A member must file a statement containing the information specified in paragraph (b)(2) of this section within 10 calendar days after becoming subject to such filing requirement under paragraph (b)(1) of this section.

(4) *Periodic update.* A member must file an amendment to the statement required pursuant to paragraph (b)(1) of this section within ten calendar days of any change in the information specified under paragraph (b)(2) of this section, except in the event of an increase or decrease of less than 1 percent of ownership of a class of securities or other ownership interest last reported on the statement filed pursuant to paragraph (b)(1) of this section, or any amendment thereto.

(c) *Copy to exchange or association.* The member shall provide a copy of the statement required by paragraph (b)(1) and amendment required by paragraph (b)(4) of this section to the disclosure entity if the disclosure entity is a national securities exchange or registered securities association, or to the applicable national securities exchange or registered securities association, if the disclosure entity is a facility.

(d) *SRO posting requirements.* A national securities exchange or registered securities association must continuously post any statement received from a member pursuant to paragraph (c) of this section on a publicly-accessible Web site controlled by the exchange or association within ten calendar days of receipt of such statement.

(e) *Other provisions.* (1) Each statement filed pursuant to this section shall constitute a ''report'' within the meaning of sections 17(a), 18(a), and 32(a) of the Act (15 U.S.C. 78q(a), 78r(a), and 78ff(a)), and any other applicable provisions of the Act.

(2) Each statement filed pursuant to this section shall be considered filed upon receipt by the Division of Market Regulation at the Commission's principal office in Washington, DC.

(f) *Exemptions.* Upon written request or on its own motion, the Commission may grant an exemption from the provisions of this section, either unconditionally or on specified terms and conditions, if the Commission determines that such exemption is necessary or appropriate in the public interest and is consistent with the protection of investors.

PART 242—REGULATIONS M, ATS, AC, NMS, AL, B and SHO AND CUSTOMER MARGIN REQUIREMENTS FOR SECURITY FUTURES

12. The authority citation for part 242 continues to read as follows:

Authority: 15 U.S.C. 77g, 77q(a), 77s(a), 78b, 78c, 78g(c)(2), 78i(a), 78j, 78k–1(c), 78*l*, 78m, 78n, 78o(b), 78o(c), 78o(g), 78q(a), 78q(b), 78q(h), 78w(a), 78dd–1, 78mm, 80a–23, 80a–29, and 80a–37.

13. The part heading for part 242 is revised as set forth above.

14. Part 242 is amended by adding an undesignated center heading and § 242.800, to read as follows:

Regulation AL—National Securities Exchanges and Registered Securities Associations Listing and Trading Affiliated Securities

§ 242.800 Regulation AL; National securities exchanges and registered securities associations listing and trading affiliated securities.

(a) *Definitions.* For purposes of this section:

(1) The term *Act* means the Securities Exchange Act of 1934.

(2) The term *affiliate* means, with respect to any person, any other person that directly or indirectly controls, is controlled by, or is under common control with, the person.

(3) The term *affiliated issuer* means:

(i) With respect to a national securities exchange, the national securities exchange, an SRO trading facility of the national securities exchange, an affiliate of the national securities exchange, or an affiliate of an SRO trading facility of the national securities exchange, and

(ii) With respect to a registered securities association, the registered securities association, an SRO trading facility of the registered securities association, an affiliate of the registered securities association, or an affiliate of an SRO trading facility of the registered securities association.

(4) The term *affiliated security* means any security issued by an affiliated issuer, except that it shall not include any option exempt from the Securities Act of 1933 under § 230.238 of this chapter and any security futures product exempt from the Securities Act of 1933 under section 3(a)(14) of the Securities Act of 1933 (15 U.S.C. 77c(a)(14)).

(5) The term *control* means the possession, direct or indirect, of the power to direct or cause the direction of the management or policies of a person, whether through ownership of voting securities, by contract, or otherwise. A person is presumed to control another person if the person:

(i) Is a director, general partner or officer exercising executive responsibility (or having similar status or functions);

(ii) Directly or indirectly has the right to vote 25 percent or more of a class of voting securities or has the power to sell or direct the sale of 25 percent or more of a class of voting securities; or

(iii) In the case of a partnership, has the right to receive, upon dissolution, or has contributed, 25 percent or more of the capital.

(6) The term *SRO trading facility* means any facility of a national securities exchange or registered

securities association that executes orders in securities.

(7) The term *facility* shall have the meaning in section 3(a)(2) of the Act (15 U.S.C. 78c(a)(2)) and § 240.15Aa–3 of this chapter.

(8) The term *member* shall have the meaning in section 3(a)(3) of the Act (15 U.S.C. 78c(a)(3)).

(9) The term *regulatory oversight committee* means a committee of the national securities exchange or registered securities association as required by § 240.6a–5(j) or § 240.15Aa–3(j) of this chapter.

(b) *Listing and trading of affiliated securities.* (1) A national securities exchange or registered securities association may not approve for listing an affiliated security unless such exchange's or association's regulatory oversight committee certifies that such security satisfies the exchange's or association's rules for listing.

(2) If an affiliated security is listed on, approved for trading on, or trades pursuant to the rules of, a national securities exchange or registered securities association, the exchange or association must:

(i) File with the Commission not more than 30 calendar days after the end of each calendar quarter a report that:

(A) Summarizes such exchange's or association's monitoring of the affiliated security's compliance with exchange's or association's listing rules, including a statement regarding such affiliated security's compliance with each applicable rule; and

(B) Summarizes such exchange's or association's surveillance of the trading of the affiliated security by the exchange's or association's members;

(ii) File with the Commission not more than 60 calendar days after the end of such exchange's or association's fiscal year a report prepared by a third party analyzing compliance by the affiliated security with the exchange's or association's listing rules;

(iii) Notify the affiliated issuer promptly if the exchange or association alleges that the affiliated security is not in compliance with any applicable listing rule of the exchange or association;

(iv) Within five business days of notifying an affiliated issuer under paragraph (b)(2)(iii) of this section, file a report with the Commission that identifies the date the exchange or association alleged that the affiliated security was not in compliance, the listing rule(s) with which the exchange or association alleged such affiliated security failed to comply, the action the exchange or association proposes to take with respect to such affiliated security, and any other material information conveyed to the affiliated issuer; and

(v) Provide the Commission with a copy of any response from the affiliated issuer regarding the exchange's or association's allegation that its affiliated security failed to comply with exchange or association rules within five business days of receipt of such response.

(c) *Regulatory Oversight Committee approval.* (1) The exchange's or association's regulatory oversight committee must approve the reports required to be filed pursuant to paragraphs (b)(2)(i) and (b)(2)(iv) of this section prior to filing with the Commission.

(2) Within five business days of receipt, the exchange or association must provide to the exchange's or association's regulatory oversight committee a copy of the report prepared by a third party pursuant to paragraph (b)(2)(ii) of this section and any response received from an affiliated issuer that is provided to the Commission pursuant to paragraph (b)(2)(v) of this section.

(d) *Application of rules.* Except as otherwise required by this section:

(1) Any action taken by the national securities exchange or registered securities association with regard to the listing of an affiliated security must be in compliance with the rules of the exchange or association;

(2) The exchange or association must not apply the same listing rules to affiliated securities in a manner that is materially different than the treatment afforded to other securities listed on the exchange or association; and

(3) Any action taken by the exchange or association with regard to trading of an affiliated security by the exchange's or association's members must be in compliance with the rules of the exchange or association and with the federal securities laws, and must not be materially different than action taken with respect to the trading of other securities traded on the exchange or association.

(e) *Other provisions.* (1) Each report filed pursuant to paragraphs (b)(2)(i), (b)(2)(ii), and (b)(2)(iv) of this section shall constitute a ''report'' within the meaning of sections 17(a), 18(a), and 32(a) of the Act (15 U.S.C. 78q(a), 78r(a), and 78ff(a)), and any other applicable provisions of the Act.

(2) Each report or response filed pursuant to this section shall be considered filed upon receipt by the Division of Market Regulation at the Commission's principal office in Washington, DC.

(f) *Exemptions.* Upon written request or on its own motion, the Commission may grant an exemption from the provisions of this section, either unconditionally or on specified terms and conditions, if the Commission determines that such exemption is necessary or appropriate in the public interest and is consistent with the protection of investors.

PART 249—FORMS, SECURITIES EXCHANGE ACT OF 1934

15. The authority citation for part 249 continues to read in part as follows:

Authority: 5 U.S.C. 78a *et seq.* and 7201 *et seq.*; and 18 U.S.C. 1350, unless otherwise noted.

* * * * *

16. Form 1 (referenced in § 249.1) is revised to read as follows:

Note: The text of Form 1 does not and this amendment will not appear in the Code of Federal Regulations.

BILLING CODE 8010–01–P

Insert OMB Box Information

FORM 1 INSTRUCTIONS

A. GENERAL INSTRUCTIONS

1. Form 1 is the application for registration as a national securities exchange or an exchange exempt from registration pursuant to Section 5 of the Securities Exchange Act of 1934 ("Exchange Act").

2. **UPDATING** - A registered exchange or exchange exempt from registration pursuant to Section 5 of the Exchange Act must file amendments to Form 1 in accordance with Exchange Act Rule 6a-2.

3. **CONTACT EMPLOYEE** - The individual listed on the Execution Page (Page 1) of Form 1 as the contact employee must be authorized to receive all contact information, communications, and mailings, and is responsible for disseminating such information within the applicant's organization.

4. **FORMAT**

   - Attach an Execution Page (Page 1) with original manual signatures.
   - Please type all information.
   - Use only the current version of Form 1 or a reproduction.

5. If the information called for by any Exhibit is available in printed form, the printed material may be filed, provided it does not exceed 8 1/2 X 11 inches in size.

6. If any Exhibit required is inapplicable, a statement to that effect shall be furnished in lieu of such Exhibit.

7. All materials required by Form 1 must be filed with the Commission in paper and also posted on a publicly accessible Internet Web site controlled by the applicant.

8. **WHERE TO FILE AND NUMBER OF COPIES** - Submit one original and two copies of Form 1 to: SEC, Division of Market Regulation, Office of Market Supervision, 450 Fifth Street, NW, Washington, DC 20549.

9. **PAPERWORK REDUCTION ACT DISCLOSURE**

   - Form 1 requires an exchange seeking to register as a national securities exchange or seeking an exemption from registration as a national securities exchange pursuant to Section 5 of the Exchange Act to provide the Securities and Exchange Commission ("SEC" or "Commission") with certain information regarding the operation of the exchange.
   - Form 1 also requires national securities exchanges or exchanges exempt from registration based on limited volume to update certain information on a periodic basis.
   - An agency may not conduct or sponsor, and a person is not required to respond to, a collection of information unless it displays a currently valid control number. Sections 3(a)(1), 5, 6(a) and 23(a) authorize the Commission to collect information on this Form 1 from exchanges. See 15 U.S.C. §§78c(a)(1), 78e, 78f(a) and 78w(a).
   - Any member of the public may direct to the Commission any comments concerning the accuracy of the burden estimate on the facing page of Form 1 and any suggestions for reducing this burden.
   - Form 1 is designed to enable the Commission to determine whether an exchange applying for registration is in compliance with the provisions of Sections 6 and 19 of the Exchange Act. Form 1 is also designed to enable the Commission to determine whether a national securities exchange or exchange exempt from registration based on limited volume is operating in compliance with the Exchange Act.
   - It is estimated that an exchange will spend approximately [47] hours completing the initial application on Form 1 pursuant to Exchange Act Rule 6a-1. It is also estimated that each exchange will spend approximately [25] hours to prepare each annual amendment to Form 1 pursuant to Rule 6a-2.
   - It is mandatory that an exchange seeking to operate as a national securities exchange or as an exchange exempt from registration based on limited volume file Form 1 with the Commission. It is also mandatory that national securities exchanges or exchanges exempt from registration based on limited volume file amendments to Form 1 under Rule 6a-2.

FORM 1 INSTRUCTIONS

- No assurance of confidentiality is given by the Commission with respect to the responses made in Form 1. The public has access to the information contained in Form 1.
- This collection of information has been reviewed by the Office of Management and Budget ("OMB") in accordance with the clearance requirements of 44 U.S.C. §3507. The applicable Privacy Act system of records is SEC-2 and the routine uses of the records are set forth at 40 FR 39255 (August 27, 1975) and 41 FR 5318 (February 5, 1976).

FORM 1 INSTRUCTIONS

B. EXPLANATION OF TERMS

APPLICANT - The entity or organization filing an application for registration or an exemption for registration, or amending any such application on this Form 1.

AFFILIATE - Any person that, directly or indirectly, controls, is controlled by, or is under common control with, the applicant.

BENEFICIAL OWNERSHIP – shall have the same meaning, with respect to any security or other ownership interest, as set forth in Rule 13d-3 under the Exchange Act, as if (and whether or not) such security or other ownership interest were a voting equity security registered under Section 12 of the Exchange Act; provided that to the extent any person beneficially owns any security or other ownership interest solely because such person is a member of a group within the meaning of Section 13(d)(3) of the Exchange Act, such person shall not be deemed to beneficially own such security or other ownership interest for purposes of this Form 1, unless such person has the power to direct the vote of such security or other ownership interest.

BOARD - Shall mean the Board of Directors or Board of Governors of the exchange, or any equivalent body.

CONTROL - The possession, direct or indirect, of the power to direct or cause the direction of the management and policies of a person, whether through ownership of voting securities, by contract, or otherwise. A person is presumed to control another person if the person:
(1) is a director, general partner or officer exercising executive responsibility (or having similar status or functions);
(2) directly or indirectly has the right to vote 25 percent or more of a class of voting securities or has the power to sell or direct the sale of 25 percent or more of a class of voting securities; or
(3) in the case of a partnership, has the right to receive, upon dissolution, or has contributed, 25 percent or more of the capital.

DIRECTOR - Shall mean a member of the Board.

DISCLOSURE ENTITY – Shall mean (1) the applicant and (2) any facility of the applicant.

FACILITY – Shall have the same meaning as in Section 3(a)(2) of the Exchange Act.

IMMEDIATE FAMILY MEMBER – Shall mean a person's spouse, parents, children, and siblings, whether by blood, marriage, or adoption, or anyone residing in such person's home.

MEMBER - Shall have the same meaning as in Section 3(a)(3) of the Exchange Act.

NATIONAL SECURITIES EXCHANGE - Shall mean any exchange registered pursuant to Section 6 of the Exchange Act.

PERSON – Shall have the same meaning as in Section 3(a)(9) of the Exchange Act.

PERSON ASSOCIATED WITH A MEMBER - Shall have the same meaning as in Section 3(a)(21) of the Exchange Act.

REGISTERED PUBLIC ACCOUNTING FIRM – Shall have the same meaning as in Section 2(a)(12) of the Sarbanes-Oxley Act of 2002.

REGULATORY SUBSIDIARY – Shall mean any person that, directly or indirectly, is controlled by the applicant and that provides, whether pursuant to contract, agreement or rule, regulatory services to or on behalf of the applicant.

RELATED PERSON - Shall mean,

(1) with respect to any member of an applicant that is a broker or dealer, any related person as defined in Rule 6a-5 under the Exchange Act; or

(2) with respect to any other person:

(a) any affiliate of the person; and

(b) in the case of a person that is a natural person, any immediate family member of such person, or any immediate family member of such person's spouse, who, in each case, has the same home as such person or who is a director or officer of the Disclosure Entity or any of its parents or subsidiaries.

SHARE – Shall mean a share of stock in a corporation or unit of interest in an unincorporated person.

SRO TRADING FACILITY – Shall mean any facility of a national securities exchange that executes orders in securities.

Form 1 Page 1 Execution Page	**UNITED STATES SECURITIES AND EXCHANGE COMMISSION** **WASHINGTON, D.C. 20549** **APPLICATION FOR, AND AMENDMENTS TO APPLICATION FOR, REGISTRATION AS A NATIONAL SECURITIES EXCHANGE OR EXEMPTION FROM REGISTRATION PURSUANT TO SECTION 5 OF THE EXCHANGE ACT**	Date Filed (MM/DD/YY):	OFFICIAL USE ONLY

WARNING: Failure to keep this form current and to file accurate supplementary information on a timely basis, or the failure to keep accurate books and records or otherwise to comply with the provisions of law applying to the conduct of the applicant would violate the federal securities laws and may result in disciplinary, administrative, or criminal action.

INTENTIONAL MISSTATEMENTS OR OMISSIONS OF FACTS MAY CONSTITUTE CRIMINAL VIOLATIONS

APPLICATION AMENDMENT

1. State the name of the applicant:
2. Provide the applicant's primary street address (Do not use a P.O. Box):
3. Provide the applicant's mailing address (if different):
4. Provide the applicant's business telephone and facsimile numbers:

   Telephone: _____ Facsimile: _____

5. Provide the name, title, and telephone number of a contact employee:

   Name: _____ Title: _____ Telephone Number: _____

6. Provide the name and address of counsel for the applicant:
7. Provide the date applicant's fiscal year ends:
8. Indicate legal status of applicant:

   _ Corporation _ Sole Proprietorship _ Partnership _ Limited Liability Company _ Other (specify):

   If other than a sole proprietor, indicate the date and place where applicant obtained its legal status (e.g. state where incorporated, place where partnership agreement was filed or where applicant entity was formed):

   (a) Date (MM/DD/YY): _____ (b) State/Country of formation: _____

   (c) Statute under which applicant was organized:

9. Provide the Internet Web site address at which the applicant's Form 1 and amendments, as filed with the Commission, may be viewed:

EXECUTION: The applicant consents that service of any civil action brought by, or notice of any proceeding before, the Securities and Exchange Commission in connection with the applicant's activities may be given by registered or certified mail or confirmed telegram to the applicant's contact employee at the main address, or mailing address if different, given in Items 2 and 3. The undersigned, being first duly sworn, deposes and says that he/she has executed this form on behalf of, and with the authority of, said applicant. The undersigned and applicant represent that the information and statements contained herein, including exhibits, schedules, or other documents attached hereto, and other information filed herewith, all of which are made a part hereof, are current, true, and complete.

Date: _____ _____
(MM/DD/YY) (Name of applicant)

By: _____ _____
(Signature) (Printed Name and Title)

Subscribed and sworn before me this _____ day of _____, _____ by _____
(Month) (Year) (Notary Public)

My Commission expires _____ County of _____ State of _____

This page must always be completed in full with original, manual signature and notarization.

Affix notary stamp or seal where applicable.

Form 1 Page 2	UNITED STATES SECURITIES AND EXCHANGE COMMISSION WASHINGTON, D.C. 20549 APPLICATION FOR, AND AMENDMENTS TO APPLICATION FOR, REGISTRATION AS A NATIONAL SECURITIES EXCHANGE OR EXEMPTION FROM REGISTRATION PURSUANT TO SECTION 5 OF THE EXCHANGE ACT	OFFICIAL USE	OFFICIAL USE ONLY

DO NOT WRITE BELOW THIS LINE - FOR OFFICIAL USE ONLY

EXHIBITS

File all Exhibits with an application for registration as a national securities exchange or exemption from registration pursuant to Section 5 of the Exchange Act and Rule 6a-1, or with amendments to such application pursuant to Rule 6a-2. For each Exhibit, include the name of the applicant, the date upon which the Exhibit was filed and the date as of which the information is accurate (if different from the date of the filing). If any Exhibit required is inapplicable, a statement to that effect shall be furnished in lieu of such Exhibit. For purposes of Exhibits A, B, C, D, E, F, G, H, and I, the term "applicant" includes any facility that is a separate legal entity and any regulatory subsidiary of the applicant. Therefore, the applicant must file as part of these Exhibits the information specified in these Exhibits with respect to any such facility and regulatory subsidiary of the applicant.

Exhibit A A copy of the constitution, articles of incorporation or association with all subsequent amendments, and of existing by-laws or corresponding rules or instruments, whatever the name, of the applicant.

Exhibit B A copy of all written rulings, settled practices having the effect of rules, and interpretations of the Board or any committee of the applicant in respect of any provisions of the constitution, by-laws, rules, or trading practices of the applicant, which are not included in Exhibit A.

Exhibit C Describe the composition, structure and responsibilities of the Board of the applicant. This description should include:

1. A list of all directors who presently hold or have held their positions during the previous year, indicating the following for each: (a) name; (b) title; (c) dates of commencement and termination of term or position; (d) type of business in which each is primarily engaged; (e) whether the director is an "independent director" as defined in 17 C.F.R. 240.6a-5 and the basis for the affirmative determination that such director is an independent director; and (f) any affiliations or relationships that reasonably could affect the director's independent judgment or decision-making as a director.
2. If the Chairman of the Board ("Chairman") and Chief Executive Officer ("CEO") are the same person, indicate the director that is designated as the lead independent director under 17 CFR 240.6a-5.
3. A discussion of the authority of the Board, including any powers of the Board to delegate its authority to management or any executive board or committee.
4. A discussion of the lines of authority between the Chairman and CEO (or between any lead independent director and the CEO when the CEO is the Chairman).
5. The method established by the Board for interested parties to communicate their concerns regarding any matter within the authority or jurisdiction of a Standing Committee directly to the independent directors, as required by 17 CFR 240.6a-5.

Exhibit D A list of the officers of the applicant who presently hold or have held their offices or positions during the previous year, indicating the following for each: (a) name; (b) title; (c) dates of commencement and termination of term of office; (d) type of business in which each is primarily engaged (e.g. floor broker, specialist, odd lot dealer, etc.); and (e) responsibilities.

Form 1 Page 3	**UNITED STATES SECURITIES AND EXCHANGE COMMISSION** **WASHINGTON, D.C. 20549** **APPLICATION FOR, AND AMENDMENTS TO APPLICATION FOR, REGISTRATION AS A NATIONAL SECURITIES EXCHANGE OR EXEMPTION FROM REGISTRATION PURSUANT TO SECTION 5 OF THE EXCHANGE ACT**	OFFICIAL USE	OFFICIAL USE ONLY

Exhibit E

Describe the composition, structure, and responsibilities of any executive board and each committee of the applicant (including Board committees, non-Board committees, mixed Board and non-Board committees, and executive board committees). Include a chart or charts that illustrate fully the governance structure of the applicant. In addition, for each applicant, provide:

1. A list of members of any executive board and each committee (including Board committees, non-Board committees, mixed Board and non-Board committees, and executive board committees), or persons performing similar functions, who presently hold or have held their offices or positions during the previous year, indicating the following for each: (a) name; (b) title; (c) dates of commencement and termination of term of office or position; (d) type of business in which each is primarily engaged; and (e) any affiliations or relationships that reasonably could affect the executive board or committee member's independent judgment or decision-making.
2. A copy of the written charter for each Standing Committee, as defined in 17 CFR 240.6a-5.

Exhibit F

Provide:

1. A copy of the governance guidelines of the applicant.
2. A copy of the code of conduct and ethics for directors, officers, and employees of the applicant.
3. A disclosure of any waivers of the code of conduct and ethics for directors, officers or employees of the applicant.

Exhibit G

Provide a chart or charts illustrating fully the internal organizational structure of the applicant. The chart or charts should indicate the internal divisions or departments; the responsibilities of each such division or department; and the reporting structure of each division or department, including its oversight by committees (or their equivalent).

Exhibit H

With regard to the regulatory program of the applicant, provide the following information:

1. Describe fully the regulatory program of the applicant, including member firm regulation, market surveillance, enforcement, listing qualifications, arbitration, rulemaking and interpretation, and the process for assessment and development of regulatory policy.
2. Describe the independence of the regulatory program of the applicant from the market operations and other commercial interests of the applicant.
3. Provide a copy of any delegation plan or other contract or agreement relating to regulatory services that are provided or will be provided to the applicant by another self-regulatory organization, a regulatory subsidiary of the applicant, or a regulatory subsidiary of another self-regulatory organization.
4. Discuss any significant changes planned for the regulatory program of the applicant.
5. Discuss fully any new significant regulatory issues that have arisen or any significant events that have taken place, including any technology or trading issues, that relate to or otherwise may affect the applicant's regulatory responsibilities or the operation of its regulatory program, and discuss the effect these significant issues or events may have on the mission, strategy, and future operations of the applicant's regulatory program.

Form 1 Page 4	UNITED STATES SECURITIES AND EXCHANGE COMMISSION WASHINGTON, D.C. 20549 APPLICATION FOR, AND AMENDMENTS TO APPLICATION FOR, REGISTRATION AS A NATIONAL SECURITIES EXCHANGE OR EXEMPTION FROM REGISTRATION PURSUANT TO SECTION 5 OF THE EXCHANGE ACT	OFFICIAL USE	OFFICIAL USE ONLY
Exhibit I	For the latest fiscal year, audited financial statements of the applicant that are prepared in accordance with, or in the case of a foreign applicant, reconciled with, United States generally accepted accounting principles, and are covered by a report prepared by a registered public accounting firm. In addition to the foregoing, for the applicant, provide the following information: 1. Financial information regarding the applicant, including a comparison to the same figures for the prior fiscal year and estimated figures for the next fiscal year, as follows: a. The percentage of the applicant's total annual budget devoted to regulatory activities, in the aggregate and itemized by program area, including supervision of members, surveillance activities, and disciplinary activities; b. The percentage of the applicant's total annual revenues devoted to regulatory activities, in the aggregate and itemized by program area, including supervision of members, surveillance activities, and disciplinary activities; c. The total dollar amount of the applicant's annual revenues and expenses, in the aggregate and itemized by program area, itemized on the basis of the following categories and sub-categories, and any other categories that incorporate the applicant's revenues and expenses, with each category annotated as appropriate to further a clear understanding of the nature of the revenues and expenses reported; i. Revenues, including: A. Regulatory fees, including member dues and assessments and similar fees, for the purpose of funding regulation, itemized by category; B. Other member dues and assessments not included in subparagraph 1.c.i.A. above; C. Transaction fees, transaction services fees, trading privileges fees, and similar fees, itemized by category; D. Market information fees, including market data fees, itemized by product; E. Fines and penalties resulting from disciplinary and enforcement actions; F. Fees paid by issuers, including listing fees and issuer services; G. Investments, including dividend and interest income; H. Other revenues, itemized as appropriate. ii. Direct expenses incurred for the applicant's regulatory activities, including supervision of members, surveillance activities, and disciplinary activities not included in allocated costs reported under subparagraph 1.c.iii. below, including, but not limited to: A. Personnel expenses, including compensation expenses; B. Compensation schedules for the Chief Regulatory Officer and all other senior regulatory personnel, including bonus ranges; C. Training; D. Expenses incurred in connection with examinations, investigations, and enforcement actions, reported separately; E. Information technology expenses, itemized by categories including data center costs, systems hardware and software, systems consultant fees, and electronic surveillance systems; F. Costs associated with any contract or other agreement with a regulatory subsidiary or another self-regulatory organization that provides (whether pursuant to contract, agreement, or rule) regulatory services to or on behalf of the applicant, disclosed separately;		

Form 1 Page 5	UNITED STATES SECURITIES AND EXCHANGE COMMISSION WASHINGTON, D.C. 20549 APPLICATION FOR, AND AMENDMENTS TO APPLICATION FOR, REGISTRATION AS A NATIONAL SECURITIES EXCHANGE OR EXEMPTION FROM REGISTRATION PURSUANT TO SECTION 5 OF THE EXCHANGE ACT	OFFICIAL USE	OFFICIAL USE ONLY

G. Occupancy and other overhead expenses;
H. Professional services, including auditing;
I. Depreciation and amortization; and
J. Other expenses. itemized as appropriate.

iii. Allocated expenses incurred by non-regulatory personnel attributable to regulation-related activities of other divisions and offices or personnel of other divisions and offices that are not formally a part of the exchange or exchange's regulatory program, including, but not limited to:

A. Personnel expenses, based on a stated percentage of employee hours devoted to regulation-related activities;
B. Information technology expenses;
C. Occupancy and other overhead expenses; and
D. Other allocated costs including, but not limited to legal fees related to regulatory activities and expenses of regulatory and business conduct committees.

2. An itemization of non-regulatory expenses, including, but not limited to, personnel expenses, program expenses, systems and other technology expenses, consultants and advisors, and overhead.
3. A discussion of information necessary to an understanding of the financial condition of the applicant and any material changes in its financial condition.
4. A discussion of any unusual or infrequent events or transactions or any significant economic changes that have had a material effect on the financial condition of the applicant and any known demands, commitments, events or uncertainties that would result in or are reasonably likely to result in a material change in financial condition. The discussion should focus on material events and uncertainties known to management that would cause reported financial information not to be necessarily indicative of future financial condition.
5. A description of any significant business development involving the applicant, including reorganization, merger or consolidation, acquisition or disposition of significant assets, or any other material change in the business or operations of the applicant.
6. A description of all material contracts and all material related party transactions. In this context, "material" contracts and related party transactions are those to which the applicant or any facility or regulatory subsidiary of the applicant is a party; any director, nominee for director, officer, member, lessee, or any immediate family member of any of the foregoing is also a party; and either the amount involved exceeds $60,000 or it is not a contract made in the ordinary course of business of the applicant or any facility or regulatory subsidiary of the applicant.
7. A description of material commitments by the applicant for expenditures as of the end of the latest fiscal period, and indicate the general purpose of such commitments and the anticipated source of funds needed to fulfill such commitments.
8. Any charitable contributions of the applicant in excess of $1,000, whether made directly or indirectly, to a charity in which an executive officer or director of the applicant, or any of their immediate family members, is an executive officer or director of the charity.
9. A table detailing the compensation of the five most highly compensated executives of the applicant, which table shall be modeled after the compensation table required to be disclosed by public reporting companies in Item 402(b) of Regulation S-K.

Form 1 Page 6	UNITED STATES SECURITIES AND EXCHANGE COMMISSION WASHINGTON, D.C. 20549 APPLICATION FOR, AND AMENDMENTS TO APPLICATION FOR, REGISTRATION AS A NATIONAL SECURITIES EXCHANGE OR EXEMPTION FROM REGISTRATION PURSUANT TO SECTION 5 OF THE EXCHANGE ACT	OFFICIAL USE	OFFICIAL USE ONLY
	10. A description of the material terms of the employment agreements of the five most highly compensated executives of the applicant. 11. A description of the compensation provided to directors.		
Exhibit J	For each affiliate of the applicant (unless the information has been provided pursuant to Exhibit I), provide separate financial statements for the latest fiscal year. Such financial statements shall consist, at a minimum, of a balance sheet and an income statement and a statement of cash flows with such footnotes and other disclosures as are necessary to avoid rendering the financial statements misleading. If any affiliate is required by another Commission rule to submit annual financial statements, a statement to that effect, with a citation to the other Commission rule, may be provided along with a copy of the financial statements prepared pursuant to such other Commission rule.		
Exhibit K	For each affiliate of the applicant and for any unaffiliated entity that operates an SRO trading facility, provide the following information (unless the information has been provided pursuant to another Exhibit to this form): 1. Name and address of organization. 2. Form of organization (e.g., association, corporation, partnership, etc.). 3. Name of state and statute citation under which organized. Date of incorporation in present form. 4. Brief description of nature and extent of affiliation. 5. Brief description of business or functions. Description should include responsibilities with respect to operation of the SRO trading facility and/or execution, reporting, clearance, or settlement of transactions in connection with operation of the SRO trading facility. In addition to the foregoing, for each affiliate of the applicant and for any unaffiliated entity that operates an SRO trading facility, provide the following information (unless the information has been provided pursuant to another Exhibit to this form): 1. A copy of the constitution. 2. A copy of the articles of incorporation or association, including all amendments. 3. A copy of existing by-laws or corresponding rules or instruments. 4. The name and title of the present officers, governors, members of all standing committees, or persons performing similar functions. 5. An indication of whether such business or organization ceased to be associated with the applicant during the previous year, and a brief statement of the reasons for termination of the association.		

Form 1 Page 7	UNITED STATES SECURITIES AND EXCHANGE COMMISSION WASHINGTON, D.C. 20549 APPLICATION FOR, AND AMENDMENTS TO APPLICATION FOR, REGISTRATION AS A NATIONAL SECURITIES EXCHANGE OR EXEMPTION FROM REGISTRATION PURSUANT TO SECTION 5 OF THE EXCHANGE ACT	OFFICIAL USE	OFFICIAL USE ONLY

Exhibit L Describe the manner of operation of any SRO trading facility. This description should include the following:

1. The means of access to the SRO trading facility.
2. Procedures governing entry and display of quotations and orders in the SRO trading facility.
3. Procedures governing the execution, reporting, clearance and settlement of transactions in connection with the SRO trading facility.
4. Proposed fees.
5. Procedures for ensuring compliance with SRO trading facility usage guidelines.
6. The hours of operation of the SRO trading facility, and the date on which applicant intends to commence operation of the SRO trading facility.
7. Attach a copy of the users' manual.
8. If the applicant proposes to hold funds or securities on a regular basis, describe the controls that will be implemented to ensure safety of those funds or securities.

Exhibit M A complete set of all forms pertaining to:

1. Application for membership, participation, or subscription to the applicant.
2. Application for approval as a person associated with a member, participant, or subscriber of the applicant.
3. Any other similar materials.

Exhibit N A complete set of all forms of financial statements, reports, or questionnaires required of members, participants, subscribers, or any other users relating to financial responsibility or minimum capital requirements for such members, participants, or any other users. Provide a table of contents listing the forms included in this Exhibit N.

Exhibit O A complete set of documents comprising the applicant's listing applications, including any agreements required to be executed in connection with listing and a schedule of listing fees. If the applicant does not list securities, provide a brief description of the criteria used to determine what securities may be traded on the exchange. Provide a table of contents listing the forms included in this Exhibit O.

Exhibit P Provide an organizational chart showing the relationship between and among the applicant, any facility of the applicant, and any affiliate(s) of the applicant or a facility of the applicant. In addition, provide the following information for the applicant and each facility and affiliate:

1. Full legal name.
2. The form of organization (e.g., corporation, limited liability company) and the jurisdiction and statute citation under which the applicant, the facility or the affiliate is organized.
3. Ownership structure.
4. Whether the applicant, facility or affiliate is a reporting issuer under Section 12 of the Exchange Act.
5. Whether the applicant, facility or affiliate is registered with the Commission as a broker or dealer, investment adviser, or otherwise.
6. Whether and how a facility or affiliate possesses the power, directly or indirectly, to direct or cause the direction of the management and policies of the applicant, whether through ownership of voting securities, by contract, or otherwise.
7. Specifically describe the ability of the facility or affiliate, through governance provisions or otherwise, to exercise any influence or control over the applicant's regulatory responsibilities.

Form 1 Page 8	UNITED STATES SECURITIES AND EXCHANGE COMMISSION WASHINGTON, D.C. 20549 APPLICATION FOR, AND AMENDMENTS TO APPLICATION FOR, REGISTRATION AS A NATIONAL SECURITIES EXCHANGE OR EXEMPTION FROM REGISTRATION PURSUANT TO SECTION 5 OF THE EXCHANGE ACT	OFFICIAL USE	OFFICIAL USE ONLY

Exhibit Q Provide the following information:

1. A description of each class or series of outstanding securities or other ownership interest (including debt) of each Disclosure Entity that includes:
   a. The title of the class of securities or other ownership interest;
   b. The total number of securities or other ownership interest issued and outstanding;
   c. Any restrictions on ownership, voting, transfers, or other disposition of such securities or other ownership interest;
   d. If the securities are publicly traded, the market(s) where they trade; and
   e. Any other material information relating to ownership of the Disclosure Entity.
2. Provide the following information with regard to any person, alone or together with its Related Persons, that directly or indirectly beneficially owns more than 5% of any class of securities or other ownership interest in a Disclosure Entity:
   a. If the person is a corporation, general partnership, limited partnership, syndicate or other group of persons, provide the following information:
      i. Name;
      ii. The state or other place of its organization;
      iii. Its principal business;
      iv. The address of its principal business; and
      v. The address of its principal office.
   b. If the person is a natural person, provide the following information:
      i. Name;
      ii. Residence or business address; and
      iii. Present principal occupation or employment and the name, principal business and address of any corporation or other organization in which such employment is conducted.
      iv. Whether such person is an officer or director of the Disclosure Entity.
   c. For each person, state the aggregate number and percentage of the shares of a class of securities or other ownership interest that are beneficially owned. In addition:
      i. Indicate the aggregate number of shares or ownership interest as to which there is sole power to vote or to direct the vote, shared power to vote or to direct the vote, sole power to dispose or to direct the disposition, or shared power to dispose or to direct the disposition.
      ii. If any other person is known to have the right to receive or the power to direct the receipt of dividends from, or the proceeds from the sale of, such securities or other ownership interest, a statement to that effect should be included in response to this provision and, if such interest relates to more than 5% of the securities or other ownership interest, such person should be identified. A listing of the shareholders of an investment company registered under the Investment Company Act of 1940 or the beneficiaries of an employee benefit plan, pension fund or endowment fund is not required.

Form 1 Page 9	**UNITED STATES SECURITIES AND EXCHANGE COMMISSION** **WASHINGTON, D.C. 20549** **APPLICATION FOR, AND AMENDMENTS TO APPLICATION FOR, REGISTRATION AS A NATIONAL SECURITIES EXCHANGE OR EXEMPTION FROM REGISTRATION PURSUANT TO SECTION 5 OF THE EXCHANGE ACT**	OFFICIAL USE	OFFICIAL USE ONLY

3. Separately identify each Related Person whose ownership in a Disclosure Entity is included in the calculation of beneficial ownership required to be disclosed pursuant to Paragraph 2 of this Exhibit Q, and state the aggregate number and percentage of shares of a class of securities or ownership interest that are beneficially owned. In addition:
   a. Indicate the aggregate number of shares or ownership interest as to which there is sole power to vote or to direct the vote, shared power to vote or to direct the vote, sole power to dispose or to direct the disposition, or shared power to dispose or to direct the disposition.
   b. If any other person is known to have the right to receive or the power to direct the receipt of dividends from, or the proceeds from the sale of, such securities or other ownership interest, a statement to that effect should be included in response to this provision and, if such interest relates to more than 5% of the securities or other ownership interest, such person should be identified. A listing of the shareholders of an investment company registered under the Investment Company Act of 1940 or the beneficiaries of an employee benefit plan, pension fund or endowment fund is not required.
   c. Indicate whether the Related Person is an officer or director of the Disclosure Entity.
4. In determining, for purposes of this Exhibit Q, any percentage of a class of any security of a Disclosure Entity, such class shall be deemed to consist of the outstanding securities of such class, exclusive of any securities of such class held by or for the account of the Disclosure Entity or a subsidiary of the Disclosure Entity.
5. For each person and its Related Person, state whether and how such person, alone or with its Related Persons, possesses the power, directly or indirectly, to direct or cause the direction of the management or policies of the Disclosure Entity, whether through ownership of voting securities, by contract, or otherwise.
6. If the Disclosure Entity is a partnership, provide a list of all general partners and those limited and special partners that have the right to receive upon dissolution, or have contributed, more than 5% of the partnership's capital.
7. Describe any contracts, arrangements, understandings or relationships (legal or otherwise) among the persons identified in Paragraphs 2.a, 2.b, and 3 of this Exhibit Q and between such persons and any other person with respect to any securities or other ownership interest of the Disclosure Entity, including but not limited to transfer or voting of any of the securities or other ownership interest, finder's fees, joint ventures, loan or option arrangements, put or calls, guarantees of profits, division of profits or loss, or the giving or withholding of proxies, and name the persons with whom such contracts, arrangements, understandings or relationships have been entered into. Include such information for any of the securities or other ownership interest that are pledged or otherwise subject to a contingency, the occurrence of which would give another person voting power or investment power over such securities or other ownership interest, except that disclosure of standard default and similar provisions contained in loan agreements need not be included.

Form 1 Page 10	UNITED STATES SECURITIES AND EXCHANGE COMMISSION WASHINGTON, D.C. 20549 APPLICATION FOR, AND AMENDMENTS TO APPLICATION FOR, REGISTRATION AS A NATIONAL SECURITIES EXCHANGE OR EXEMPTION FROM REGISTRATION PURSUANT TO SECTION 5 OF THE EXCHANGE ACT	OFFICIAL USE	OFFICIAL USE ONLY

Exhibit R Describe the applicant's criteria for membership. Describe conditions under which members may be subject to suspension or termination with regard to access to the exchange. Describe any procedures that will be involved in the suspension or termination of a member.

Exhibit S Provide an alphabetical list of all members, participants, subscribers or other users, including the following information:

1. Name;
2. Date of election to membership or acceptance as a participant, subscriber or other user;
3. Principal business address and telephone number;
4. If member, participant, subscriber or other user is an individual, the name of the entity with which such individual is associated and the relationship of such individual to the entity (e.g., partner, officer, director, employee, etc.);
5. Describe the type of activities primarily engaged in by the member, participant, subscriber, or other user (e.g., floor broker, specialist, odd lot dealer, other market maker, proprietary trader, non-broker dealer, inactive or other functions). A person shall be "primarily engaged" in an activity or function for purposes of this item when that activity or function is the one in which that person is engaged for the majority of their time. When more than one type of person at an entity engages in any of the six types of activities or functions enumerated in this item, identify each type (e.g., proprietary trader, Registered Competitive Trader and Registered Competitive Market Maker) and state the number of members, participants, subscribers, or other users in each; and
6. The class of membership, participation or subscription or other access.

Exhibit T Provide a schedule for each of the following:

1. The securities listed on the applicant or any facility of the applicant, indicating for each the name of the issuer and a description of the security;
2. The securities admitted to unlisted trading privileges, indicating for each the name of the issuer and a description of the security;
3. The unregistered securities admitted to trading on the applicant or any facility of the applicant that are exempt from registration under Section 12(a) of the Act. For each security listed, provide the name of the issuer and a description of the security, and the statutory exemption claimed (e.g., 17 CFR 240.12a-6); and
4. Other securities traded on the applicant or any facility of the applicant, including for each the name of the issuer and a description of the security.
5. If a class of securities of the applicant, an SRO trading facility of the applicant, or any affiliate of the applicant or an SRO trading facility of the applicant, is listed on, approved for trading on, or trades pursuant to the rules of, the applicant, an explanation of the process for monitoring initial and ongoing compliance by the security with the applicant's listing rules and trading in the security by the applicant's members, as well as the process for enforcing the applicant's listing rules, trading rules and federal securities laws with respect to the listing and trading of the securities.

Exhibit U Provide the name and address for the location of the applicant's books and records.

17. Section 249.2 and Form 2 (referenced in § 249.2) are added to read as follows:

§ 249.2 Form 2, for application for, and amendments to applications for, registration as a registered securities association or affiliated securities association.

The form shall be used for application for, and amendments to applications for, registration as a registered securities association or affiliated securities association.

Note: The text of Form 2 does not and this amendment will not appear in the Code of Federal Regulations.

Insert OMB Box Information

FORM 2 INSTRUCTIONS

A. GENERAL INSTRUCTIONS

1. Form 2 is the application for registration as a registered securities association or an affiliated securities association pursuant to Section 15A of the Securities Exchange Act of 1934 ("Exchange Act").
2. **UPDATING** - A registered securities association or affiliated securities association must file amendments to Form 2 in accordance with Exchange Act Rule 15Aa-2.
3. **CONTACT EMPLOYEE** - The individual listed on the Execution Page (Page 1) of Form 2 as the contact employee must be authorized to receive all contact information, communications, and mailings, and is responsible for disseminating such information within the applicant's organization.
4. **FORMAT**
   - Attach an Execution Page (Page 1) with original manual signatures.
   - Please type all information.
   - Use only the current version of Form 2 or a reproduction.
5. If the information called for by any Exhibit is available in printed form, the printed material may be filed, provided it does not exceed 8 1/2 X 11 inches in size.
6. If any Exhibit required is inapplicable, a statement to that effect shall be furnished in lieu of such Exhibit.
7. All materials required by Form 2 must be filed with the Commission in paper and also posted on a publicly accessible Internet Web site controlled by the applicant.
8. **WHERE TO FILE AND NUMBER OF COPIES** - Submit one original and two copies of Form 2 to: SEC, Division of Market Regulation, Office of Market Supervision, 450 Fifth Street, NW, Washington, DC 20549.
9. **PAPERWORK REDUCTION ACT DISCLOSURE**
   - Form 2 requires an association seeking to register as a registered securities association or affiliated securities association to provide the Securities and Exchange Commission ("SEC" or "Commission") with certain information regarding the operation of the association.
   - Form 2 also requires registered securities associations or affiliated securities associations to update certain information on a periodic basis.
   - An agency may not conduct or sponsor, and a person is not required to respond to, a collection of information unless it displays a currently valid control number. Sections 3(a)(26), 15A, and 23(a) authorize the Commission to collect information on this Form 2 from associations. See 15 U.S.C. §§78c(a)(26), 78o-3, and 78w(a).
   - Any member of the public may direct to the Commission any comments concerning the accuracy of the burden estimate on the facing page of Form 2 and any suggestions for reducing this burden.
   - Form 2 is designed to enable the Commission to determine whether an association applying for registration is in compliance with the provisions of Sections 15A and 19 of the Exchange Act. Form 2 is also designed to enable the Commission to determine whether a registered securities associations or affiliated securities association is operating in compliance with the Exchange Act.
   - It is estimated that an exchange will spend approximately [47] hours completing the initial application on Form 2 pursuant to Exchange Act Rule 15Aa-2. It is also estimated that each exchange will spend approximately [25] hours to prepare each annual amendment to Form 2 pursuant to Rule 15Aa-2.
   - It is mandatory that an association seeking to operate as a registered securities association or as an affiliated securities association file Form 2 with the Commission. It is also mandatory that registered securities associations or affiliated securities associations file amendments to Form 2 under Rule 15Aa-2.

FORM 2 INSTRUCTIONS

- No assurance of confidentiality is given by the Commission with respect to the responses made in Form 2. The public has access to the information contained in Form 2.
- This collection of information has been reviewed by the Office of Management and Budget ("OMB") in accordance with the clearance requirements of 44 U.S.C. §3507. The applicable Privacy Act system of records is SEC-2 and the routine uses of the records are set forth at 40 FR 39255 (August 27, 1975) and 41 FR 5318 (February 5, 1976).

FORM 2 INSTRUCTIONS

B. EXPLANATION OF TERMS

APPLICANT - The entity or organization filing an application for registration or an exemption for registration, or amending any such application on this Form 2.

AFFILIATE - Any person that, directly or indirectly, controls, is controlled by, or is under common control with, the applicant.

AFFILIATED SECURITIES ASSOCIATION - Shall mean any association registered pursuant to Section 15A(d) of the Exchange Act.

BENEFICIAL OWNERSHIP – shall have the same meaning, with respect to any security or other ownership interest, as set forth in Rule 13d-3 under the Exchange Act, as if (and whether or not) such security or other ownership interest were a voting equity security registered under Section 12 of the Exchange Act; provided that to the extent any person beneficially owns any security or other ownership interest solely because such person is a member of a group within the meaning of Section 13(d)(3) of the Exchange Act, such person shall not be deemed to beneficially own such security or other ownership interest for purposes of this Form 2, unless such person has the power to direct the vote of such security or other ownership interest.

BOARD - Shall mean the Board of Directors or Board of Governors of the association, or any equivalent body.

CONTROL - The possession, direct or indirect, of the power to direct or cause the direction of the management and policies of a person, whether through ownership of voting securities, by contract, or otherwise. A person is presumed to control another person if the person:

(1) is a director, general partner or officer exercising executive responsibility (or having similar status or functions);
(2) directly or indirectly has the right to vote 25 percent or more of a class of voting securities or has the power to sell or direct the sale of 25 percent or more of a class of voting securities; or
(3) in the case of a partnership, has the right to receive, upon dissolution, or has contributed, 25 percent or more of the capital, is presumed to control that person.

DIRECTOR - Shall mean a member of the Board.

DISCLOSURE ENTITY – Shall mean (1) the applicant and (2) any facility of the applicant.

FACILITY – Shall have the same meaning in 17 CFR 240.15Aa-3.

IMMEDIATE FAMILY MEMBER – Shall mean a person's spouse, parents, children, and siblings, whether by blood, marriage, or adoption, or anyone residing in such person's home.

MEMBER - Shall have the same meaning as in Section 3(a)(3) of the Exchange Act.

REGISTERED SECURITIES ASSOCIATION- Shall mean any association registered pursuant to Section 15A(b) of the Exchange Act.

PERSON – Shall have the same meaning as in Section 3(a)(9) of the Exchange Act.

PERSON ASSOCIATED WITH A MEMBER - Shall have the same meaning as in Section 3(a)(21) of the Exchange Act.

REGISTERED PUBLIC ACCOUNTING FIRM – Shall have the same meaning as in Section 2(a)(12) of the Sarbanes-Oxley Act of 2002.

REGULATORY SUBSIDIARY – Shall mean any person that, directly or indirectly, is controlled by the applicant and that provides, whether pursuant to contract, agreement or rule, regulatory services to or on behalf of the applicant.

RELATED PERSONS - Shall mean,

(1) with respect to any member of an applicant, any related person as defined in Rule 15Aa-3 under the Exchange Act; or

(2) with respect to any other person:

(a) any affiliate of the person; and

(b) in the case of a person that is a natural person, any immediate family member of such person, or any immediate family member of such person's spouse who, in each case, has the same home as such person or who is a director or officer of the Disclosure Entity or any of its parents or subsidiaries.

SHARE – Shall mean a share of stock in a corporation or unit of interest in an unincorporated person.

SRO TRADING FACILITY – Shall mean any facility of a registered securities association that executes orders in securities.

Form 2 Page 1 Execution Page	**UNITED STATES SECURITIES AND EXCHANGE COMMISSION WASHINGTON, D.C. 20549 APPLICATION FOR, AND AMENDMENTS TO APPLICATION FOR, REGISTRATION AS A REGISTERED SECURITIES ASSOCIATION OR AFFILIATED SECURITIES ASSOCIATION**	Date Filed (MM/DD/YY):	OFFICIAL USE ONLY

WARNING: Failure to keep this form current and to file accurate supplementary information on a timely basis, or the failure to keep accurate books and records or otherwise to comply with the provisions of law applying to the conduct of the applicant would violate the federal securities laws and may result in disciplinary, administrative, or criminal action.

INTENTIONAL MISSTATEMENTS OR OMISSIONS OF FACTS MAY CONSTITUTE CRIMINAL VIOLATIONS

APPLICATION AMENDMENT

1. State the name of the applicant:

2. Provide the applicant's primary street address (Do not use a P.O. Box) for (a) statutory office; (b) principal executive office; and (c) branch or district offices:
3. Provide the applicant's mailing address (if different):
4. Provide the applicant's business telephone and facsimile numbers:

   Telephone: _____ Facsimile: _____
5. Provide the name, title, and telephone number of a contact employee:
   Name: _____ Title: _____ Telephone Number: _____
6. Provide the name and address of counsel for the applicant:
7. Provide the date applicant's fiscal year ends:
8. Indicate legal status of applicant:
   _ Corporation _ Sole Proprietorship _ Partnership _ Limited Liability Company _ Other (specify):
   If other than a sole proprietor, indicate the date and place where applicant obtained its legal status (e.g. state where incorporated, place where partnership agreement was filed or where applicant entity was formed):
   (a) Date (MM/DD/YY): _____ (b) State/Country of formation: _____
   (c) Statute under which applicant was organized:
9. Provide the Internet Web site address at which the applicant's Form 2 and amendments, as filed with the Commission, may be viewed:
10. If the application is for registration as an affiliated securities association, provide the name of the registered securities association to which the applicant seeks to be affiliated, and estimate the annual dollar volume of transactions effected by members of the applicant association.

EXECUTION: The applicant consents that service of any civil action brought by, or notice of any proceeding before, the Securities and Exchange Commission in connection with the applicant's activities may be given by registered or certified mail or confirmed telegram to the applicant's contact employee at the main address, or mailing address if different, given in Items 2 and 3. The undersigned, being first duly sworn, deposes and says that he/she has executed this form on behalf of, and with the authority of, said applicant. The undersigned and applicant represent that the information and statements contained herein, including exhibits, schedules, or other documents attached hereto, and other information filed herewith, all of which are made a part hereof, are current, true, and complete.

Date: _____ _____
(MM/DD/YY) (Name of applicant)

By: _____ _____
(Signature) (Printed Name and Title)

Subscribed and sworn before me this _____ day of _____, _____ by _____
(Month) (Year) (Notary Public)

My Commission expires _____ County of _____ State of _____

This page must always be completed in full with original, manual signature and notarization.

Affix notary stamp or seal where applicable.

Form 2 Page 2	UNITED STATES SECURITIES AND EXCHANGE COMMISSION WASHINGTON, D.C. 20549 APPLICATION FOR, AND AMENDMENTS TO APPLICATION FOR, REGISTRATION AS A REGISTERED SECURITIES ASSOCIATION OR AFFILIATED SECURITIES ASSOCIATION	OFFICIAL USE	OFFICIAL USE ONLY

DO NOT WRITE BELOW THIS LINE - FOR OFFICIAL USE ONLY

EXHIBITS

File all Exhibits with an application for registration as a registered securities association or affiliated securities association, or with amendments to such application pursuant to Rule 15Aa-2. For each Exhibit, include the name of the applicant, the date upon which the Exhibit was filed and the date as of which the information is accurate (if different from the date of the filing). If any Exhibit required is inapplicable, a statement to that effect shall be furnished in lieu of such Exhibit. For purposes of Exhibits A, B, C, D, E, F, G, H, and I, the term "applicant" includes any facility that is a separate legal entity and any regulatory subsidiary of the applicant. Therefore, the applicant must file as part of these Exhibits the information specified in these Exhibits with respect to any such facility and regulatory subsidiary of the applicant.

Exhibit A A copy of the constitution, articles of incorporation or association with all subsequent amendments, and of existing by-laws or corresponding rules or instruments, whatever the name, of the applicant.

Exhibit B A copy of all written rulings, settled practices having the effect of rules, and interpretations of the Board or any committee of the applicant in respect of any provisions of the constitution, by-laws, rules, or trading practices of the applicant, which are not included in Exhibit A.

Exhibit C Describe the composition, structure and responsibilities of the Board of the applicant. This description should include:

1. A list of all directors who presently hold or have held their positions during the previous year, indicating the following for each: (a) name; (b) title; (c) dates of commencement and termination of term or position; (d) type of business in which each is primarily engaged; (e) whether the director is an "independent director" as defined in 17 C.F.R. 240.15Aa-3 and the basis for the affirmative determination that such director is an independent director; and (f) any affiliations or relationships that reasonably could affect the director's independent judgment or decision-making as a director.
2. If the Chairman of the Board ("Chairman") and Chief Executive Officer ("CEO") are the same person, indicate the director that is designated as the lead independent director.
3. A discussion of the authority of the Board, including any powers of the Board to delegate its authority to management or any executive board or committee.
4. A discussion of the lines of authority between the Chairman and CEO (or between any lead independent director and the CEO when the CEO is the Chairman).
5. The method established by the Board for interested parties to communicate their concerns regarding any matter within the authority or jurisdiction of a Standing Committee directly to the independent directors, as required by 17 CFR 15Aa-3.

Exhibit D A list of the officers of the applicant who presently hold or have held their offices or positions during the previous year, indicating the following for each: (a) name; (b) title; (c) dates of commencement and termination of term of office; (d) type of business in which each is primarily engaged (e.g. floor broker, specialist, odd lot dealer, etc.) and (e) responsibilities.

Form 2 Page 3	UNITED STATES SECURITIES AND EXCHANGE COMMISSION WASHINGTON, D.C. 20549 APPLICATION FOR, AND AMENDMENTS TO APPLICATION FOR, REGISTRATION AS A REGISTERED SECURITIES ASSOCIATION OR AFFILIATED SECURITIES ASSOCIATION	OFFICIAL USE	OFFICIAL USE ONLY

Exhibit E Describe the composition, structure, and responsibilities of any executive board and each committee of the applicant (including Board committees, non-Board committees, mixed Board and non-Board committees, and executive board committees). Include a chart or charts that illustrate fully the governance structure of the applicant. In addition, for each applicant, provide:

1. A list of members of any executive board and each committee (including Board committees, non-Board committees, mixed Board and non-Board committees, and executive board committees), or persons performing similar functions, who presently hold or have held their offices or positions during the previous year, indicating the following for each: (a) name; (b) title; (c) dates of commencement and termination of term of office or position; (d) type of business in which each is primarily engaged; and (e) any affiliations or relationships that reasonably could affect the executive board or committee member's independent judgment or decision-making.
2. A copy of the written charter for each Standing Committee, as defined in 17 CFR 240.15Aa-3.

Exhibit F Provide:

1. A copy of the governance guidelines of the applicant.
2. A copy of the code of conduct and ethics for directors, officers, and employees of the applicant.
3. A disclosure of any waivers of the code of conduct and ethics for directors, officers or employees of the applicant.

Exhibit G Provide a chart or charts illustrating fully the internal organizational structure of the applicant. The chart or charts should indicate the internal divisions or departments; the responsibilities of each such division or department; and the reporting structure of each division or department, including its oversight by committees (or their equivalent).

Exhibit H With regard to the regulatory program of the applicant, provide the following information:

1. Describe fully the regulatory program of the applicant, including member firm regulation, market surveillance, enforcement, listing qualifications, arbitration, rulemaking and interpretation, and the process for assessment and development of regulatory policy.
2. Describe the independence of the regulatory program of the applicant from the market operations and other commercial interests of the applicant.
3. Provide a copy of any delegation plan or other contract or agreement relating to regulatory services that are provided or will be provided to the applicant by another self-regulatory organization, a regulatory subsidiary, or a regulatory subsidiary of another self-regulatory organization.
4. Discuss any significant changes planned for the regulatory program of the applicant.
5. Discuss fully any new significant regulatory issues that have arisen or any significant events that have taken place, including any technology or trading issues, that relate to or otherwise may affect the applicant's regulatory responsibilities or the operation of its regulatory program, and discuss the effect these significant issues or events may have on the mission, strategy, and future operations of the applicant's regulatory program.

Form 2 Page 4	UNITED STATES SECURITIES AND EXCHANGE COMMISSION WASHINGTON, D.C. 20549 APPLICATION FOR, AND AMENDMENTS TO APPLICATION FOR, REGISTRATION AS A REGISTERED SECURITIES ASSOCIATION OR AFFILIATED SECURITIES ASSOCIATION	OFFICIAL USE	OFFICIAL USE ONLY

Exhibit I For the latest fiscal year, audited financial statements of the applicant that are prepared in accordance with, or in the case of a foreign applicant, reconciled with, United States generally accepted accounting principles, and are covered by a report prepared by a registered public accounting firm. In addition to the foregoing, for the applicant, provide the following information:

1. Financial information regarding the applicant, including a comparison to the same figures for the prior fiscal year and estimated figures for the next fiscal year, as follows:

   a. The percentage of the applicant's total annual budget devoted to regulatory activities, in the aggregate and itemized by program area, including supervision of members, surveillance activities, and disciplinary activities;
   b. The percentage of the applicant's total annual revenues devoted to regulatory activities, in the aggregate and itemized by program area, including supervision of members, surveillance activities, and disciplinary activities;
   c. The total dollar amount of the applicant's annual revenues and expenses, in the aggregate and itemized by program area, itemized on the basis of the following categories and sub-categories, and any other categories that incorporate the applicant's revenues and expenses, with each category annotated as appropriate to further a clear understanding of the nature of the revenues and expenses reported;
      i. Revenues, including:
         A. Regulatory fees, including member dues and assessments and similar fees, for the purpose of funding regulation, itemized by category;
         B. Other member dues and assessments not included in subparagraph 1.c.i.A., above;
         C. Transaction fees, transaction services fees, trading privileges fees, and similar fees, itemized by category;
         D. Market information fees, including market data fees, itemized by product;
         E. Fines and penalties resulting from disciplinary and enforcement actions;
         F. Fees paid by issuers, including listing fees and issuer services;
         G. Investments, including dividend and interest income;
         H. Other revenues, itemized as appropriate.
      ii. Direct expenses incurred for the applicant's regulatory activities, including supervision of members, surveillance activities, and disciplinary activities not included in allocated costs reported under subparagraph 1.c.iii. below, including, but not limited to:
         A. Personnel expenses, including compensation expenses;
         B. Compensation schedules for the Chief Regulatory Officer and all other senior regulatory personnel, including bonus ranges;
         C. Training;
         D. Expenses incurred in connection with examinations, investigations, and enforcement actions, reported separately;
         E. Information technology expenses, itemized by categories including data center costs, systems hardware and software, systems consultant fees, and electronic surveillance systems;
         F. Costs associated with any contract or other agreement with a regulatory subsidiary or another self-regulatory organization that provides (whether pursuant to contract, agreement, or rule) regulatory services to or on behalf of the applicant, disclosed separately;

Form 2 Page 5	UNITED STATES SECURITIES AND EXCHANGE COMMISSION WASHINGTON, D.C. 20549 APPLICATION FOR, AND AMENDMENTS TO APPLICATION FOR, REGISTRATION AS A REGISTERED SECURITIES ASSOCIATION OR AFFILIATED SECURITIES ASSOCIATION	OFFICIAL USE	OFFICIAL USE ONLY

G. Occupancy and other overhead expenses;
H. Professional services, including auditing;
I. Depreciation and amortization; and
J. Other expenses, itemized as appropriate.

iii. Allocated expenses incurred by non-regulatory personnel attributable to regulation-related activities of other divisions and offices or personnel of other divisions and offices that are not formally a part of the association or association's regulatory program, including, but not limited to:

A. Personnel expenses, based on a stated percentage of employee hours devoted to regulation-related activities;
B. Information technology expenses;
C. Occupancy and other overhead expenses; and
D. Other allocated costs including, but not limited to legal fees related to regulatory activities and expenses of regulatory and business conduct committees.

2. An itemization of non-regulatory expenses, including, but not limited to, personnel expenses, program expenses, systems and other technology expenses, consultants and advisors, and overhead.
3. A discussion of information necessary to an understanding of the financial condition of the applicant and any material changes in its financial condition.
4. A discussion of any unusual or infrequent events or transactions or any significant economic changes that have had a material effect on the financial condition of the applicant and any known demands, commitments, events or uncertainties that would result in or are reasonably likely to result in a material change in financial condition. The discussion should focus on material events and uncertainties known to management that would cause reported financial information not to be necessarily indicative of future financial condition.
5. A description of any significant business development involving the applicant including reorganization, merger or consolidation, acquisition or disposition of significant assets, or any other material change in the business or operations of the applicant.
6. A description of all material contracts and all material related party transactions. In this context, "material" contracts and related party transactions are those to which the applicant or any facility or regulatory subsidiary of the applicant is a party; any director, nominee for director, officer, member, lessee, or any immediate family member of any of the foregoing is also a party; and either the amount involved exceeds $60,000 or it is not a contract made in the ordinary course of business of the applicant or any facility or regulatory subsidiary of the applicant.
7. A description of material commitments by the applicant for expenditures as of the end of the latest fiscal period, and indicate the general purpose of such commitments and the anticipated source of funds needed to fulfill such commitments.
8. Any charitable contributions of the applicant in excess of $1,000, whether made directly or indirectly, to a charity in which an executive officer or director of the applicant, or any of their immediate family members, is an executive officer or director of the charity.
9. A table detailing the compensation of the five most highly compensated executives of the applicant which table shall be modeled after the compensation table required to be disclosed by public reporting companies in Item 402(b) of Regulation S-K.

Form 2 Page 6	UNITED STATES SECURITIES AND EXCHANGE COMMISSION WASHINGTON, D.C. 20549 APPLICATION FOR, AND AMENDMENTS TO APPLICATION FOR, REGISTRATION AS A REGISTERED SECURITIES ASSOCIATION OR AFFILIATED SECURITIES ASSOCIATION	OFFICIAL USE	OFFICIAL USE ONLY

10. A description of the material terms of the employment agreements of the five most highly compensated executives of the applicant.
11. A description of the compensation provided to directors.

Exhibit J For each affiliate of the applicant (unless the information has been provided pursuant to Exhibit I), provide separate financial statements for the latest fiscal year. Such financial statements shall consist, at a minimum, of a balance sheet and an income statement and a statement of cash flows with such footnotes and other disclosures as are necessary to avoid rendering the financial statements misleading. If any affiliate is required by another Commission rule to submit annual financial statements, a statement to that effect, with a citation to the other Commission rule, may be provided along with a copy of the financial statements prepared pursuant to such other Commission rule.

Exhibit K For each affiliate of the applicant and for any unaffiliated entity that operates an SRO trading facility, provide the following information (unless the information has been provided pursuant to another Exhibit to this form):

1. Name and address of organization.
2. Form of organization (e.g., association, corporation, partnership, etc.).
3. Name of state and statute citation under which organized. Date of incorporation in present form.
4. Brief description of nature and extent of affiliation.
5. Brief description of business or functions. Description should include responsibilities with respect to operation of the SRO trading facility and/or execution, reporting, clearance, or settlement of transactions in connection with operation of the SRO trading facility.

In addition to the foregoing, for each affiliate of the applicant and for any unaffiliated entity that operates an SRO trading facility, provide the following information (unless the information has been provided pursuant to another Exhibit to this form):

1. A copy of the constitution.
2. A copy of the articles of incorporation or association, including all amendments.
3. A copy of existing by-laws or corresponding rules or instruments.
4. The name and title of the present officers, governors, members of all standing committees, or persons performing similar functions.
5. An indication of whether such business or organization ceased to be associated with the applicant during the previous year, and a brief statement of the reasons for termination of the association.

Form 2 Page 7	UNITED STATES SECURITIES AND EXCHANGE COMMISSION WASHINGTON, D.C. 20549 APPLICATION FOR, AND AMENDMENTS TO APPLICATION FOR, REGISTRATION AS A REGISTERED SECURITIES ASSOCIATION OR AFFILIATED SECURITIES ASSOCIATION	OFFICIAL USE	OFFICIAL USE ONLY

Exhibit L Describe the manner of operation of any SRO trading facility. This description should include the following:

1. The means of access to the SRO trading facility.
2. Procedures governing entry and display of quotations and orders in the SRO trading facility.
3. Procedures governing the execution, reporting, clearance and settlement of transactions in connection with the SRO trading facility.
4. Proposed fees.
5. Procedures for ensuring compliance with SRO trading facility usage guidelines.
6. The hours of operation of the SRO trading facility, and the date on which applicant intends to commence operation of the SRO trading facility.
7. Attach a copy of the users' manual.
8. If the applicant proposes to hold funds or securities on a regular basis, describe the controls that will be implemented to ensure safety of those funds or securities.

Exhibit M A complete set of all forms pertaining to:

1. Application for membership, participation, or subscription to the applicant.
2. Application for approval as a person associated with a member, participant, or subscriber of the applicant.
3. Any other similar materials.

Exhibit N A complete set of all forms of financial statements, reports, or questionnaires required of members, participants, subscribers, or any other users relating to financial responsibility or minimum capital requirements for such members, participants, or any other users. Provide a table of contents listing the forms included in this Exhibit N.

Exhibit O A complete set of documents comprising the applicant's listing applications, including any agreements required to be executed in connection with listing and a schedule of listing fees. If the applicant does not list securities, provide a brief description of the criteria used to determine what securities may be traded on the applicant or on any facility of the applicant. Provide a table of contents listing the forms included in this Exhibit O.

Exhibit P Provide an organizational chart showing the relationship between and among the applicant, any facility of the applicant, and any affiliate(s) of the applicant or a facility of the applicant. In addition, provide the following information for the applicant and each facility and affiliate:

1. Full legal name.
2. The form of organization (e.g., corporation, limited liability company) and the jurisdiction and statute citation under which the applicant, the facility or the affiliate is organized.
3. Ownership structure.
4. Whether the applicant, facility or affiliate is a reporting issuer under Section 12 of the Exchange Act.
5. Whether the applicant, facility or affiliate is registered with the Commission as a broker or dealer, investment adviser, or otherwise.
6. Whether and how a facility or affiliate possesses the power, directly or indirectly, to direct or cause the direction of the management and policies of the applicant, whether through ownership of voting securities, by contract, or otherwise.
7. Specifically describe the ability of the facility or affiliate, through governance provisions or otherwise, to exercise any influence or control over the applicant's regulatory responsibilities.

Form 2 Page 8	**UNITED STATES SECURITIES AND EXCHANGE COMMISSION** **WASHINGTON, D.C. 20549** **APPLICATION FOR, AND AMENDMENTS TO APPLICATION FOR, REGISTRATION AS A REGISTERED SECURITIES ASSOCIATION OR AFFILIATED SECURITIES ASSOCIATION**	OFFICIAL USE	OFFICIAL USE ONLY

Exhibit Q Provide the following information:

1. A description of each class or series of outstanding securities or other ownership interest (including debt) of each Disclosure Entity that includes:
   a. The title of the class of securities or other ownership interest;
   b. The total number of securities or other ownership interest issued and outstanding;
   c. Any restrictions on ownership, voting, transfers, or other disposition of such securities or other ownership interest;
   d. If the securities are publicly traded, the market(s) where they trade; and
   e. Any other material information relating to ownership of the Disclosure Entity.
2. Provide the following information with regard to any person, alone or together with its Related Persons, that directly or indirectly beneficially owns more than 5% of any class of securities or other ownership interest in a Disclosure Entity:
   a. If the person is a corporation, general partnership, limited partnership, syndicate or other group of persons, provide the following information:
      i. Name;
      ii. The state or other place of its organization;
      iii. Its principal business;
      iv. The address of its principal business; and
      v. The address of its principal office.
   b. If the person is a natural person, provide the following information:
      i. Name;
      ii. Residence or business address; and
      iii. Present principal occupation or employment and the name, principal business and address of any corporation or other organization in which such employment is conducted.
      iv. Whether such person is an officer or director of the Disclosure Entity.
   c. For each person, state the aggregate number and percentage of the shares of a class of securities or other ownership interest that are beneficially owned. In addition:
      i. Indicate the aggregate number of shares or ownership interest as to which there is sole power to vote or to direct the vote, shared power to vote or to direct the vote, sole power to dispose or to direct the disposition, or shared power to dispose or to direct the disposition.
      ii. If any other person is known to have the right to receive or the power to direct the receipt of dividends from, or the proceeds from the sale of, such securities or other ownership interest, a statement to that effect should be included in response to this provision and, if such interest relates to more than 5% of the securities or other ownership interest, such person should be identified. A listing of the shareholders of an investment company registered under the Investment Company Act of 1940 or the beneficiaries of an employee benefit plan, pension fund or endowment fund is not required.

Form 2 Page 9	UNITED STATES SECURITIES AND EXCHANGE COMMISSION WASHINGTON, D.C. 20549 APPLICATION FOR, AND AMENDMENTS TO APPLICATION FOR, REGISTRATION AS A REGISTERED SECURITIES ASSOCIATION OR AFFILIATED SECURITIES ASSOCIATION	OFFICIAL USE	OFFICIAL USE ONLY

3. Separately identify each Related Person whose ownership in a Disclosure Entity is included in the calculation of beneficial ownership required to be disclosed pursuant to Paragraph 2 of this Exhibit Q, and state the aggregate number and percentage of shares of a class of securities or ownership interest that are beneficially owned. In addition:
    a. Indicate the aggregate number of shares or ownership interest as to which there is sole power to vote or to direct the vote, shared power to vote or to direct the vote, sole power to dispose or to direct the disposition, or shared power to dispose or to direct the disposition.
    b. If any other person is known to have the right to receive or the power to direct the receipt of dividends from, or the proceeds from the sale of, such securities or other ownership interest, a statement to that effect should be included in response to this provision and, if such interest relates to more than 5% of the securities or other ownership interest, such person should be identified. A listing of the shareholders of an investment company registered under the Investment Company Act of 1940 or the beneficiaries of an employee benefit plan, pension fund or endowment fund is not required.
    c. Indicate whether the Related Person is an officer or director of the Disclosure Entity or the applicant.
4. In determining, for purposes of this Exhibit Q, any percentage of a class of any security of a Disclosure Entity, such class shall be deemed to consist of the outstanding securities of such class, exclusive of any securities of such class held by or for the account of the Disclosure Entity or a subsidiary of the Disclosure Entity.
5. For each person and its Related Person, state whether and how such person, alone or with its Related Persons, possesses the power, directly or indirectly, to direct or cause the direction of the management or policies of the Disclosure Entity, whether through ownership of voting securities, by contract, or otherwise.
6. If the Disclosure Entity is a partnership, provide a list of all general partners and those limited and special partners that have the right to receive upon dissolution, or have contributed, more than 5% of the partnership's capital.
7. Describe any contracts, arrangements, understandings or relationships (legal or otherwise) among the persons identified in Paragraphs 2.a, 2.b, and 3 of this Exhibit Q and between such persons and any other person with respect to any securities or other ownership interest of the Disclosure Entity, including but not limited to transfer or voting of any of the securities or other ownership interest, finder's fees, joint ventures, loan or option arrangements, put or calls, guarantees of profits, division of profits or loss, or the giving or withholding of proxies, and name the persons with whom such contracts, arrangements, understandings or relationships have been entered into. Include such information for any of the securities
or other ownership interest that are pledged or otherwise subject to a contingency, the occurrence of which would give another person voting power or investment power over such securities or other ownership interest, except that disclosure of standard default and similar provisions contained in loan agreements need not be included.

Form 2 Page 10	**UNITED STATES SECURITIES AND EXCHANGE COMMISSION WASHINGTON, D.C. 20549 APPLICATION FOR, AND AMENDMENTS TO APPLICATION FOR, REGISTRATION AS A REGISTERED SECURITIES ASSOCIATION OR AFFILIATED SECURITIES ASSOCIATION**	OFFICIAL USE	OFFICIAL USE ONLY
Exhibit R	Describe the applicant's criteria for membership. Describe conditions under which members may be subject to suspension or termination with regard to access to the association. Describe any procedures that will be involved in the suspension or termination of a member.		
Exhibit S	Provide an alphabetical list of all members, participants, subscribers or other users, including the following information: 1. Name; 2. Date of election to membership or acceptance as a participant, subscriber or other user; 3. Principal business address and telephone number; 4. If member, participant, subscriber or other user is an individual, the name of the entity with which such individual is associated and the relationship of such individual to the entity (e.g., partner, officer, director, employee, etc.); 5. Describe the type of activities primarily engaged in by the member, participant, subscriber, or other user (e.g., floor broker, specialist, odd lot dealer, other market maker, proprietary trader, non-broker dealer, inactive or other functions). A person shall be "primarily engaged" in an activity or function for purposes of this item when that activity or function is the one in which that person is engaged for the majority of their time. When more than one type of person at an entity engages in any of the six types of activities or functions enumerated in this item, identify each type (e.g., proprietary trader, Registered Competitive Trader and Registered Competitive Market Maker) and state the number of members, participants, subscribers, or other users in each; and 6. The class of membership, participation or subscription or other access.		
Exhibit T	Provide a schedule for each of the following: 1. The securities listed on the applicant or any facility of the applicant, indicating for each the name of the issuer and a description of the security; 2. The securities admitted to unlisted trading privileges, indicating for each the name of the issuer and a description of the security; 3. The unregistered securities admitted to trading on the applicant or any facility of the applicant that are exempt from registration under Section 12(a) of the Act. For each security listed, provide the name of the issuer and a description of the security, and the statutory exemption claimed (e.g., 17 CFR 240.12a-6); and 4. Other securities traded on the applicant or any facility of the applicant, including for each the name of the issuer and a description of the security. 5. If a class of securities of a the applicant, an SRO trading facility of the applicant, or any affiliate of the applicant or an SRO trading facility of the applicant, is listed on, approved for trading on, or trades pursuant to the rules of, the applicant, an explanation of the process for monitoring initial and ongoing compliance by the security with the applicant's listing rules and trading in the security by the applicant's members, as well as the process for enforcing the applicant's listing rules, trading rules, and federal securities laws with respect to the listing and trading of the securities.		
Exhibit U	Provide the name and address for the location of the applicant's books and records.		

§§ 249.801, 249.802, and 249.803 [Removed]

18. Sections 249.801, 249.802, and 249.803 are removed.

Dated: November 18, 2004.

By the Commission.

Margaret H. McFarland,

Deputy Secretary.

[FR Doc. 04–26153 Filed 12–7–04; 8:45 am]

BILLING CODE 8010–01–P

Federal Register

Wednesday,
December 8, 2004

Part III

Securities and Exchange Commission

17 CFR Part 240

Concept Release Concerning Self-Regulation; Proposed Rule

SECURITIES AND EXCHANGE COMMISSION

17 CFR Part 240

[Release No. 34–50700; File No. S7–40–04]

RIN 3235–AJ36

Concept Release Concerning Self-Regulation

AGENCY: Securities and Exchange Commission.

ACTION: Concept release; request for comment.

SUMMARY: The Securities and Exchange Commission (''Commission'' or ''SEC'') is publishing this concept release and seeking public comment on a range of issues related to the self-regulatory system of the securities industry. This release discusses the foundations of the self-regulatory system and new considerations that the Commission and the industry are facing. In addition, this release describes certain enhancements that could be made to the current system that could improve its operation and also discusses a variety of other potential approaches to securities industry regulation.

DATES: Comments should be submitted on or before March 8, 2005.

ADDRESSES: Comments may be submitted by any of the following methods:

Electronic Comments

- Use the Commission's Internet comment form (*http://www.sec.gov/rules/concept.shtml*); or
- Send an e-mail to *rule-comments@sec.gov*. Please include File Number S7–40–04 on the subject line; or
- Use the Federal eRulemaking Portal (*http://www.regulations.gov*). Follow the instructions for submitting comments.

Paper Comments

- Send paper comments in triplicate to Jonathan G. Katz, Secretary, Securities and Exchange Commission, 450 Fifth Street, NW., Washington, DC 20549–0609.

All submissions should refer to File Number S7–40–04. This file number should be included on the subject line if e-mail is used. To help us process and review your comments more efficiently, please use only one method. The Commission will post all comments on the Commission's Internet Web site (*http://www.sec.gov/rules/concept.shtml*). Comments are also available for public inspection and copying in the Commission's Public Reference Room, 450 Fifth Street, NW., Washington, DC 20549. All comments received will be posted without change; we do not edit personal identifying information from submissions. You should submit only information that you wish to make available publicly.

FOR FURTHER INFORMATION CONTACT: Christopher B. Stone, Senior Special Counsel to the Director, at (202) 942–7938 who is in the Division of Market Regulation, Securities and Exchange Commission, 450 Fifth Street NW., Washington DC 20549–1001.

SUPPLEMENTARY INFORMATION:

Table of Contents

I. Introduction
II. Foundations of Self-Regulation
III. New Considerations
IV. Current SRO System Attributes
A. Inherent Conflicts With Members, Market Operations, Issuers, and Shareholders
1. Inherent Conflicts with Members
2. Inherent Conflicts with Market Operations
3. Inherent Conflicts with Issuers
4. Inherent Conflicts with Shareholders
B. Inefficiencies of Multiple SROs
C. Intermarket Surveillance
D. Funding
1. Overview
2. SRO Funding Sources
a. Regulatory Fees
b. Transaction Fees
c. Listing Fees
d. Market Data Fees
e. Miscellaneous Fees
V. Alternative Regulatory Approaches
A. Proposed Enhancements to the Current SRO System
1. SRO Governance and Transparency Rulemaking
2. Intermarket Surveillance Enhancements
B. Independent Regulatory and Market Corporate Subsidiaries
C. Hybrid Model
D. Competing Hybrid Model
E. Universal Industry Self-Regulator
F. Universal Non-Industry Regulator
G. SEC Regulation
H. Other Models
VI. Solicitation of Additional Comments

I. Introduction

Self-regulation is a key component of U.S. securities industry regulation. All broker-dealers are required to be members of a self-regulatory organization (''SRO''), which sets standards, conducts examinations, and enforces rules regarding its members.[1] Most, but not all, SROs also operate and regulate markets or clearing services.[2] Inherent in self-regulation is the conflict of interest that exists when an organization both serves the commercial interests of and regulates its members or users.

The Securities Exchange Act of 1934 (''Exchange Act''),[3] the Maloney Act of 1938 (''Maloney Act''),[4] and the Exchange Act Amendments of 1975 (''1975 Amendments''),[5] reflect Congress' determination to rely on self-regulation as a fundamental component of U.S. market and broker-dealer regulation, despite this inherent conflict of interest. Congress favored self-regulation for a variety of reasons. A key reason was that the cost of effectively regulating the inner-workings of the securities industry at the federal level was viewed as cost prohibitive and inefficient.[6] In addition, the complexity of securities trading practices made it desirable for SRO regulatory staff to be intimately involved with SRO rulemaking and enforcement.[7] Moreover, the SROs could set standards that exceeded those imposed by the Commission, such as just and equitable principles of trade and detailed proscriptive business conduct standards.[8] In short, Congress determined that the securities industry self-regulatory system would provide a workable balance between federal and industry regulation.[9]

Since the self-regulatory system was incorporated into the federal securities laws, the Commission has reexamined it periodically.[10] While steps have been

[1] 15 U.S.C. 78o15(b)(8).

[2] Analysis in this release focuses primarily on one registered national securities association SRO, the National Association of Securities Dealers (''NASD'') (including its subsidiary, the Nasdaq Stock Market (''Nasdaq'')), and those registered national securities exchange SROs that operate equity or options markets, the American Stock Exchange (''Amex''), the Boston Stock Exchange (''BSE''), the Chicago Board Options Exchange (''CBOE''), the Chicago Stock Exchange (''CHX''), the International Securities Exchange (''ISE''), the National Stock Exchange (''NSX'') the New York Stock Exchange (''NYSE''), the Pacific Exchange (''PCX''), and the Philadelphia Stock Exchange (''Phlx''). Unless otherwise specifically noted, discussion in this release does not necessarily relate to other registered SROs, including the National Futures Association (''NFA''), the Municipal Securities Rulemaking Board (''MSRB''), the registered clearing agencies, and notice registered national securities exchanges.

[3] 15 U.S.C. 78a *et seq.*

[4] Pub. L. 75–719, 52 Stat. 1070 (1938) (codified as amended at 15 U.S.C. 78*o*, authorizing the U.S. Securities and Exchange Commission to register national securities associations).

[5] Pub. L. 29, 89 Stat. 97 (1975).

[6] *See generally* S. Rep. No. 1455, 73d Cong., 2d Sess. (1934); H.R. Doc. No. 1383, 73d Cong., 2d Sess. (1934); S. Rep. No. 1455, 73d Cong., 2d Sess. (1934).

[7] *Id.*

[8] *Id.*

[9] *Id.*

[10] *See e.g.*, 1961–1963 Special Study of Securities Markets. Securities and Exchange Commission, Report of Special Study of Securities Markets, (''Special Study''), H.R. Doc. No. 95, 88th Cong., 1st Sess. (1963) and *Market 2000: An Examination of Current Equity Market Developments*, Division of Market Regulation, U.S. Securities and Exchange Commission (January 1994) (''Market 2000 Report'').

taken over time to redress perceived shortcomings, the SRO structure has been repeatedly reaffirmed both by Congress and the Commission.[11] In recent years, changes in the markets and in the ownership structure of SROs have generated questions about the fairness and efficiency of the current SRO structure.[12] The increased dispersion of order flow across multiple markets has produced questions of comparable regulation by SROs and the effectiveness of cross-market supervision.[13] The increased competition among markets for listings and trading volume has applied pressure on SRO regulatory efforts and sources of funding.[14] Moreover, the advent of for-profit, shareholder-owned SROs has introduced potential new conflicts of interest and issues of regulatory incentives.[15] In addition, recent failings or perceived failings with respect to SROs fulfilling their self-regulatory obligations have sparked public debate as to the efficacy of the SRO system in general.[16]

For these reasons, the Commission is publishing this release to discuss and solicit comments on the role and operation of SROs in today's markets. This release examines a number of issues concerning securities industry self-regulation, including: (1) The inherent conflicts of interest between an SRO's regulatory obligations and the interests of its members, its market operations, its listed issuers, and, in the case of a demutualized SRO, its shareholders; (2) the costs and inefficiencies of the multiple SRO model; (3) the challenges of surveillance across markets by multiple SROs; and (4) the manner in which SROs generate revenue and how SROs fund regulatory operations. Finally, this release examines and seeks comment on certain enhancements to the current system and a number of regulatory approaches or legislative initiatives that could be considered by the Commission to address concerns with the current SRO model.

II. Foundations of Self-Regulation

Securities industry self-regulation has a long tradition in the U.S. securities markets. In its earliest years, the nascent U.S. securities industry was subject loosely to state laws and, in 1792, the New York broker community negotiated the historic Buttonwood Agreement to form the first organized stock market in New York.[17] As the NYSE and other stock exchanges developed, trading conventions became formalized as exchange rules. In 1817, the NYSE's Constitution was adopted and the NYSE subsequently adopted a range of rules governing its members and listed companies, including member financial responsibility rules and listed company registration and financial reporting rules.[18] In 1820, a detailed set of NYSE By-Laws was adopted.[19]

Federal regulation of exchanges, and their formal recognition as self-regulatory organizations, followed a number of significant events, including the stock market crash of 1929 and the evidence of NYSE investigatory failures related to market manipulation highlighted at the 1934 Pecora Hearings.[20] In Section 6 of the Exchange Act, Congress recognized the regulatory role of exchanges, and required all existing securities exchanges, including the NYSE, to register with the Commission and to function as self-regulatory organizations.[21]

The stock market crash of 1929 also severely damaged the public reputation of over-the-counter (''OTC'') securities dealers. In 1933, in an effort to improve their collective image, OTC dealers formed the Investment Bankers Code Committee (''IBCC''), which promulgated industry best practices.[22] In 1936, the IBCC was succeeded, by the Investment Bankers Conference (''IBC''), a prominent group of investment banks formed to act as a national, voluntary industry organization.[23]

After experience with the IBCC and the IBC, the Commission and leaders of the investment banking community generally agreed that an industry association needed official legal status in order to effectively carry out the task of self-regulating the OTC market.[24] Ultimately, in 1938, the Maloney Act amended the Exchange Act by adding a new Section 15A and establishing the concept of registered national securities association SROs.[25] To date, the NASD and the NFA [26] are the only registered national securities associations.

In enacting these provisions, Congress concluded that self-regulation of both the exchange markets and the OTC market was a mutually beneficial balance between government and securities industry interests.[27] Through establishment of self-regulation, the securities industry was supervised by an organization familiar with the nuances of securities industry operations. In addition, industry participants preferred the less invasive regulation by their peers to direct government regulation and the government benefited by being able to leverage its resources through its oversight of self-regulatory organizations.[28] Moreover, the SROs had the ability to set proscriptive standards relating to just and equitable principles of trade and detailed business conduct standards.[29] In enacting the Maloney Act in 1938, Congress stated that an approach to securities regulation relying solely on government regulation ''would involve a pronounced expansion of the organization of the Securities and Exchange Commission; the multiplication of branch offices; a large increase in the expenditure of public funds; an increase in the problem of avoiding the evils of bureaucracy; and a minute, detailed, and rigid regulation of business conduct by law.'' [30]

The legislative history of the 1975 Amendments noted that, rather than adopt this purely governmental approach, Congress determined that it was ''distinctly preferable'' to rely on ''cooperative regulation, in which the task will be largely performed by representative organizations of investment bankers, dealers, and brokers, with the Government exercising appropriate supervision in the public interest, and exercising supplementary

[11] *See e.g., Id.*; infra notes 30–31.

[12] *See generally* infra Section IV.

[13] *Id.*

[14] *Id.*

[15] *Id.*

[16] *Id.*

[17] Robert Sobel, *The Big Board, A History of the New York Stock Market* 14–27 (The Free Press 1965). The agreement generally bound its signors to give preference to each other when buying and selling. *Id.*

[18] *Id.* at 30–31.

[19] *Id.* at 38–40.

[20] Joel Seligman, *The Transformation of Wall Street: A History of the Securities and Exchange Commission and Modern Corporate Finance* at 1–38 (Aspen Pub. N.Y. 3rd ed. 2003).

[21] Exchange Act Section 6, 15 U.S.C. 78f.

[22] Seligman at 183–85.

[23] The IBC, however, proved to be imperfect, because only seventeen hundred of the nation's six thousand securities dealers ultimately joined. While the Commission realized that this voluntary organization was not effectively regulating the OTC market, it also determined that direct Commission regulation of the OTC market was not practicable. *See* Seligman at 183–85. While not speaking for the whole Commission, one early Commissioner compared the prospect of regulating the OTC market to building a structure out of sand because ''there is no cohesive force to hold it together, no organization with which [the Commission] could build, as authoritatively representing a substantial element in the over-the-counter business.'' *Id.*

[24] *Id.*

[25] Exchange Act Section 15A, 15 U.S.C. 78o–3.

[26] NFA is a national securities association registered for the limited purpose of regulating the activities of members who are registered as brokers or dealers in security futures products under Section 15(b)(11) of the Exchange Act, 15 U.S.C. 78o(b)(11).

[27] *See* supra notes 6–9.

[28] *Id.*

[29] Market 2000 Report at VI–6.

[30] S. Rep. No. 1455, 75th Cong., 3d Sess. I.B.4. (1938); H.R. Rep. No. 2307, 75th Cong., 3d Sess. I.B.4. (1938) (duplicate text quoted in both reports).

powers of direct regulation.'' [31] Similarly, in 1975, Congress stated that a principal reason for retaining a self-regulatory regime was the ''sheer ineffectiveness of attempting to assure [regulation] directly through the government on a wide scale,'' and that, although the SROs had not always performed their role up to expectations, self-regulation generally was considered to have worked well and ''should be preserved and strengthened.'' [32]

The Commission has periodically examined the self-regulatory system and the extent to which SROs have successfully fulfilled their statutory obligations.[33] Such analysis has sometimes resulted in SROs making changes to their structures or regulatory programs. For example, after problems surfaced regarding the floor operations of Amex specialists, the Commission sponsored the sweeping 1961–1963 Special Study.[34] The Special Study concluded that SROs have a natural tendency to protect member firms and that SRO regulatory operations appear to falter without the ''pointed stimuli'' of vigilant Commission oversight.[35] Among other conclusions, the Special Study found a need for a reduction in the amount of control that exchange floor members exercised over exchange regulatory operations and governance.[36] Moreover, the study called for a general strengthening of SRO governance.[37]

Another example of past analysis was the Commission's Division of Market Regulation review of the structure and costs of the SRO system in the Market 2000 Report, which was published by the Commission in 1994. The Market 2000 Report noted the impact that increasing intermarket competition and duplicative SRO rules were having on the self-regulatory system.[38] In addition, the report discussed the extent to which costs to support the SRO system were being fairly allocated across the markets.[39] The report also examined the desirability of reallocating the regulatory and market functions of SROs and the possibility of the Commission assuming a greater role with respect to the functions carried out by the SROs.[40] While the opinion advanced in the Market 2000 Report was that such changes were unlikely to improve the existing SRO system, it did not foreclose the possibility of reconsidering this position in the future in light of changed circumstances.[41]

Another example of past Commission analysis on this issue was in 1996 when the Commission instituted administrative proceedings against the NASD with respect to OTC market maker pricing collusion.[42] At the same time, the Commission issued the 21(a) Report regarding the NASD and Nasdaq. In the 21(a) Report, issued pursuant to Section 21(a) of the Exchange Act, the Commission discussed at length a range of issues concerning the efficacy of the self-regulatory system and the potential problems associated with inherent SRO conflicts.[43] Of particular concern, in this case, was the lack of independence of the NASD regulatory staff from Nasdaq's market operations.[44]

In sum, while Congress and the Commission have criticized and modified the SRO system in the past, it has not been radically revised or dismantled since its establishment. Rather, it is generally considered that the SRO system has functioned effectively and has served government, industry, and investors well.[45] Notwithstanding this positive record, because of new considerations in our markets, the Commission believes it is an appropriate time to reexamine and solicit public comment on the efficacy of the system overall.

III. New Considerations

In recent years, the U.S. markets have experienced increasingly vigorous competition. The effect of this development is that markets operated by SROs have faced increased competition from foreign trading markets and from electronic communications networks (''ECNs'') that have shifted significant amounts of market share away from the primary markets, especially with respect to Nasdaq securities. For example, the NYSE and Amex historically dominated trading in their listed securities, and market makers dominated trading in Nasdaq stocks. Today, however, in the Nasdaq market, automated market centers (such as Nasdaq's order collector, aggregator, and execution system, SuperMontage, the Archipelago exchange (''ArcaEx''), and the INET ECN) have captured more than 50% of share volume.[46] For Amex-listed stocks (for which approximately 39% of share volume now is represented by two extremely active exchange-traded funds (''ETFs'')—the QQQ and SPDR), Amex now handles approximately 21% of the volume, with the remaining balance split among Arca-Ex, INET, and others.[47] The NYSE has managed to retain approximately 80% of the volume in its listed stocks, but other market centers are raising the level of competition and reducing the NYSE's share of trading.[48] Moreover, the NYSE and Amex have sought to add automated facilities that are integrated with and complement their traditional exchange floors.[49] In the listed options markets, the proliferation of multiple trading of options and the entry of two new electronic exchanges has raised the tempo of competition among these markets and redistributed their market share.[50]

[31] S. Rep. No. 94–75, 94th Cong., 1st Sess. 7, II (1975).

[32] *Id.*

[33] *See e.g.*, supra note 10. In addition, the Commission speaks implicitly and explicitly to self-regulatory concepts in virtually every SRO rule that is noticed for public comment and approved through the Commission Rule 19b–4 rule filing process. SEC Rule 19b–4, 17 CFR 240.19b–4.

[34] Specialist domination of the Amex resulted in a series of scandals in the late 1950s involving market manipulations. In 1961, the Commission launched an investigation into the trading practices of two Amex specialists in particular. This investigation was ultimately broadened into the Special Study. *See* Seligman at 281–86.

[35] *See generally* Seligman at 299–348.

[36] *Id.*

[37] *Id.* Congress recognized that self-regulators may not always be as diligent as desired, and, indeed, may use self-regulation as a device to avoid regulation altogether. Nonetheless, Congress also was of the view that members of the securities industry could bring down to bear on the problems of regulation a degree of expertise and, in many circumstances, expedition not expected of a necessarily more remote governmental agency. Special Study at 693–697.

[38] *See* Market 2000 Report at III–1.

[39] *Id.* at III–3.

[40] *Id.* at III–5–7.

[41] *Id.* at III–10. *See also* infra Section IV.

[42] *See* In the Matter of National Association of Securities Dealers, Inc.; SEC Release No. 34–37538, August 8, 1996; Administrative Proceeding File No. 3–9056 (''21(a) Administrative Order''). *See also* Report and Appendix to Report Pursuant to Section 21(a) of the Securities Exchange Act of 1934 Regarding the NASD and The Nasdaq Stock Market (August 8, 1996) and Securities Exchange Act Release No. 37538 (August 8, 1996) (''21(a) Report''). The undertakings were included in the SEC Order (''21(a) Report Undertakings'').

[43] *See* 21(a) Administrative Order Section III; 21(a) Report at 40–47.

[44] *See* 21(a) Administrative Order Section III; 21(a) Report at 52–54.

[45] *See e.g.*, supra note 10.

[46] The figure is based on Nasdaq/UTP Plan market data (as of September 2004).

[47] The figure is based on Network B, CTS Activity market data (as of September 2004).

[48] The figure is based on Network A, CTS Activity market data (as of September 2004). *See also e.g.,* Ivy Schmerken, *Will the NYSE's Specialist Probe Open the Listed Market to ECNs?,* Wall Street + Technology, July 1, 2003, at 18; Robert Sales, *The Big Picture—ECN Evolution,* Wall Street + Technology, February 1, 2003, at 6.

[49] *See* Securities Exchange Act Release Nos. 50173 (August 10, 2004), 69 FR 50407 (August 16, 2004) (notice of proposed rule change proposing improvements to NYSE's existing automatic execution facility, NYSE Direct+®); and 49921 (June 25, 2004), 69 FR 40690 (July 6, 2004) (approval of proposed rule change by Amex to enhance its Auto-Ex technology for exchange-traded funds and Nasdaq stocks traded on the exchange).

[50] In August 1999, 32% of equity options were traded on more than one exchange. By September 2000, that number had risen to 45%. Over the same period, the percentage of aggregate option volume traded on only one exchange fell from 60% to 15%. *See* Exchange Act Release No. 43085 (July 28,

This heightened competition has benefited trading markets by spurring innovation in trading systems and responsiveness to customers.[51] It has also driven down costs, including fees charged by the trading markets.[52] At the same time, this competition places greater strains on the self-regulatory system.[53] Some industry observers have posited that trading previously covered by one market's rules may move to another market in search of lower regulatory standards.[54] Others have argued that trading across markets may be subject to inconsistent rules across several markets.[55] Some have voiced concerns about falling market share inducing SROs to reduce the rigor of their member and market supervision programs.[56] Also, concerns have been raised about SROs favoring key participants in their markets to encourage those key participants to remain active in their markets or to attract other users.[57] Shifts in market share can undermine revenues supporting an SRO's regulatory functions, without reducing the SRO's responsibility for supervision of its members trading across markets.[58] Shifts in trading to multiple markets also increase concerns about potential gaps in the surveillance of intermarket trading.[59]

Other considerations also may alter the delicate balance of the SRO system. The conversion of some SROs to publicly traded, for profit status may increase the actual or perceived conflicts inherent in the SRO model.[60] Likewise, numerous recent SRO failings related to governance, member oversight and trading supervision raise significant concerns about the efficacy of the self-regulatory model.[61] Finally, in response to the recently proposed Regulation NMS (''Reg NMS''),[62] commenters raised serious questions about the level of market data fees, which are an important component of SRO revenues and the funding of self-regulation.[63] The Commission believes that it is an appropriate time to issue a concept release to examine and solicit public comment on the extent to which recent developments in our markets warrant changes to the current system.

IV. Current SRO System Attributes

This discussion focuses on the following distinctive attributes of the existing SRO system and explores how recent market changes have impacted them: (1) The inherent conflicts of interest between SRO regulatory operations and members, market operations, issuers, and shareholders; (2) the costs and inefficiencies of multiple SROs, arising from multiple SRO rulebooks, inspection regimes, and staff; (3) the challenges of surveillance of cross market trading by multiple SROs; and (4) the funding SROs have available for regulatory operations and the manner in which SROs allocate revenue to regulatory operations.

A. Inherent Conflicts With Members, Market Operations, Issuers, and Shareholders

Among the most controversial features of the existing SRO system is the inherent conflict that exists within every SRO between its regulatory functions and its members, market operations, listed issuers, and shareholders. The following discussion considers these conflicts.

1. Inherent Conflicts With Members

The SROs are responsible for promulgating and enforcing rules that govern all aspects of their members' securities business, including their financial condition, operational capabilities, sales practices, and the qualifications of their personnel.[64] In fulfilling these functions, the SROs conduct examinations on the premises of their members, monitor financial and other operational reports, investigate potential violations of rules, and bring disciplinary proceedings when appropriate. In addition, SROs must surveil trading on any markets they operate to detect rule violations and other improper practices, such as insider trading and market manipulation. Unchecked conflicts in the dual role of regulating and serving can result in poorly targeted SRO rulemaking, less extensive SRO rulemaking, and under zealous enforcement of SRO rules against members. It is also important to note that, even where an SRO structure may appear sound, successful self-regulation relies on sufficiently vigorous rule enforcement against members on the part of the SRO. If regulatory staff is disinclined to regulate members, self-regulation will fail. Thus, to be effective, an SRO must be structured in such a way that regulatory staff is unencumbered by inappropriate business pressure.

Pressures that inhibit effective regulation and discourage vigorous enforcement against members can arise for a variety of reasons, including member domination of SRO funding, member control of SRO governance, and member influence over regulatory and enforcement staff. In addition, the economic importance of certain SRO members may create particularly acute conflicts, especially in light of the consolidation of some of the largest securities firms. For example, the number of NYSE specialist firms, which are central to the NYSE's auction trading model, has dropped from 27 in 1999 to 7 in 2002.[65] One NYSE specialist firm in 2003 accounted for over 28% of total NYSE trading volume.[66] The number of specialist firms at the CHX has dropped from 15 in 2002 to 8 in 2004.[67] Approximately 47% and 29% of the NSX's total

2000), 65 FR 47918 (August 4, 2000) (proposing to extend Exchange Act Rule 11Ac1–1 to options). According to the Options Clearing Corporation, by September 2003, 98.3% of equity options classes traded on more than one exchange. As of December 2003, the market shares held by options exchanges were 31.3% by the CBOE, 27.0% by the ISE, 19.8% by the Amex, 12.4% by the Phlx, and 9.5% by the PCX. Options Clearing Corporation, 2003 Annual Report 1 (2004). By June of 2004, the ISE's market share was 33.6%, the CBOE's was 26.0%, the Amex's was 18.6%, the Phlx's was 11.6%, the PCX's was 8.4% , and the BSE Boston Options Exchange (''BOX'') facility's was 1.8%. Will Acworth, *Electronic Trading Sweeps Options Industry,* Futures Industry Magazine, September/October 2004 (citing Futures Industry Association statistics).

[51] *See* generally infra Section IV.

[52] *Id.*

[53] *Id.*

[54] *Id.*

[55] *Id.*

[56] *Id.*

[57] *Id.*

[58] *Id.*

[59] *Id.*

[60] *Id.*

[61] *See In the Matter of Chicago Stock Exchange,* Securities Exchange Act Release No. 48566 (September 30, 2003). *See also In the Matter of Bear Wagner Specialists LLC,* Securities Exchange Act Release No. 49498 (March 30, 2004); *In the Matter of Fleet Specialist, Inc.,* Securities Exchange Act Release No. 49499 (March 30, 2004); *In the Matter of LaBranche & Co. LLC,* Securities Exchange Act Release No. 49500 (March 30, 2004); *In the Matter of Spear, Leeds & Kellogg Specialists LLC,* Securities Exchange Act Release No. 49501 (March 30, 2004); *In the Matter of Van der Moolen Specialists USA, LLC,* Securities Exchange Act Release No. 49502 (March 30, 2004). *See In the Matter of SIG Specialists, Inc.,* Securities Exchange Act Release No. 50076 (July 26, 2004) and *In the Matter of Performance Specialist Group LLC,* Securities Exchange Act Release No. 50075 (July 26, 2004). *See also* Securities Exchange Act Release No. 48946 (December 17, 2003), 68 FR 74678 (December 24, 2003) (approving NYSE proposal to restructure NYSE corporate governance structure).

[62] *See* Exchange Act Release No. 49325 (February 26, 2004), 69 FR 11126 (March 9, 2004) (noticing proposed rulemaking for comment); Exchange Act Release No. 49749 (May 20, 2003), 69 FR 30142 (May 26, 2004) (extending comment period and seeking additional comments).

[63] *See infra* Section IV.

[64] See *e.g.*, Exchange Act Sections 6(b) and 15A(b), 15 U.S.C. 78f(b) and 78o–3(b).

[65] LaBranche & Co. Inc., 2002 Annual Report 6 (2002).

[66] LaBranche & Co. Inc., 2002 Annual Report 14 (2003).

[67] Peter Chapman, *Windy City Loses Another Specialist,* Traders Magazine, July 1, 2004.

transaction charges were derived from one member for the years 2003 and 2002, respectively.[68] In addition, this single NSX member was responsible for generating 93% and 10% of Tape B market data revenues for the years 2003 and 2002, respectively.[69] This single NSX member was also responsible for generating 100% of NSX's Tape C market data revenues in both 2003 and 2002.[70] In the options market, there are just over 40 specialists and market makers on the nation's options exchanges, whereas just three years ago there were over 70.[71]

Thus, the current situation appears to be one in which a declining number of member firms are increasingly important to the business interests of their regulator SROs. The anecdotal evidence cited above could indicate that SROs have become more dependent on large members for their funding, potentially enabling those members to wield significant influence with respect to their regulator SROs. This creates the potential for failures by SROs to enforce rules against these members, especially when compared to enforcement against other smaller or less economically influential members, and SRO failures to develop rules that would disrupt the business practices of important members.

The PCX's proposal in 2001 to enter into an arrangement in which ArcaEx would become the PCX's equity trading facility presented a particularly complicated situation in which an SRO would be affiliated with a member. [72] In the ArcaEx Approval Order, the Commission examined a variety of issues related to self-regulation, including the regulatory responsibilities of the PCX under the new structure and the potential for inherent conflicts to be exacerbated when an SRO is affiliated with a member. In addition, the Commission imposed certain requirements with respect to PCX and ArcaEx that were designed to ensure that the various functions of the affiliated broker-dealer were properly regulated.[73]

In the ArcaEx Approval Order, the Commission discussed the PCX's proposal that Wave Securities LLC (''Wave''), a wholly owned subsidiary of ArcaEx, would be a registered broker-dealer and a member of both the PCX and the NASD. Wave would have two primary functions with respect to ArcaEx. Specifically, Wave would act as an introducing broker for customers that were not PCX members and would provide sponsored access to ArcaEx. Wave would also provide an optional routing service for ArcaEx, and, as necessary, would route orders to other market centers from ArcaEx.[74]

Under Section 6(b)(5) of the Exchange Act, the rules of a national securities exchange must not be designed to permit unfair discrimination between customers, issuers, brokers, or dealers.[75] The Commission noted in the ArcaEx Approval Order that the potential for unfair discrimination may be heightened if a national securities exchange or its affiliate owns or operates a broker-dealer. This is because, the Commission stated, the financial interests of the exchange may conflict with its responsibilities as an SRO regarding the affiliated broker-dealer. Moreover, the Commission described the conflict of interest that may arise if a national securities exchange (or an affiliate) provides advantages to its broker-dealer that are not available to other members, or provides a feature to all members that was designed to give its broker-dealer a special advantage. These advantages, such as greater access to information, improved speed of execution, or enhanced operational capabilities in dealing with the exchange, might constitute unfair discrimination under the Exchange Act, the Commission concluded. Thus, the Commission required that the PCX not serve as the self-regulatory organization primarily responsible for examining the Wave broker dealer.[76]

The Commission ultimately determined that, although Wave's routing services would be optional, Wave's order-routing function occupied a special position with respect to ArcaEx. In the Commission's view, Wave was uniquely linked to and endorsed by ArcaEx to provide its outbound routing functionality. Therefore, the Commission concluded that the PCX application of the Wave order-routing function fell within the definition of a facility under Section 3(a)(2) of the Exchange Act [77] and, as such, would be subject to the Commission's continuing oversight. In particular, under the Exchange Act, the PCX would be required to file rule changes and fees relating to the Wave order-routing function, and Wave would be subject to exchange non-discrimination requirements. Thus, the Commission imposed these requirements to address the potential misuse of advantages that might arise from an SRO member carrying out an order-routing function on behalf of an SRO.[78]

In the past, members also have historically controlled the boards and the key committees of SROs. For example, in the 21(a) Report concerning the NASD, the Commission discussed the extent to which large members had made up a majority or substantial proportion of the NASD's Board of Governors.[79] Moreover, the Commission discussed the extensive influence wielded by market maker members over the SRO's disciplinary process due to their strong representation on the NASD's District Business Conduct Committees (''DBCCs''), which served a ''grand jury'' function with respect to the initiation of disciplinary proceedings.[80] Ultimately, the Commission's settlement with the NASD resulted in significant corporate structure changes designed to prevent these conflicts from occurring in the future.[81]

Recently, the NYSE changed its governance structure to reduce conflicts of interest with respect to members.[82] Specifically, the NYSE created a wholly independent board and regulatory staff that report to an independent board committee.[83] In addition, amendments to the NYSE's charter mandated increased transparency of the NYSE's operations and corporate governance.[84] The governance changes included the

[68] NSX, 2003 Annual Report Exhibit I–12 (2004).

[69] *Id.*

[70] *Id.*

[71] Eric Noll, *Shifting Models of Option Market Participants*, Futures Industry Magazine, September/October 2004.

[72] *See* Exchange Act Release No. 44983 (October 25, 2001), 66 FR 55225, 55229–30 (November 1, 2001) (approving SR–PCX–00–25) (''ArcaEx Approval Order''). ArcaEx is operated by Archipelago Exchange LLC. At the time of this approval, PCX's ownership interest in Arca LLC consisted solely of a 10% interest in Archipelago Holdings LLC, the parent company of Arca LLC. *See* 66 FR at 55225.

[73] *Id.*

[74] *Id.*

[75] *See* Section 6(b)(5) of the Act, 15 U.S.C. 78f(b)(5).

[76] *See* ArcaEx Approval Order at 55233.

[77] The term ''facility'' when used with respect to an exchange includes its premises, tangible or intangible property whether on the premises or not, any right to use of such premises or property or any service thereof *for the purpose of effecting or reporting a transaction on the exchange (including, among other things, any system of communication to or from the exchange,* by ticket or otherwise maintained by or with the consent of the exchange), and any right of the exchange to the use of any property or service. (Emphasis added.) Exchange Act Section 3(a)(2), 15 U.S.C. 78c(a)(2).

[78] *See* ArcaEx Approval Order at 55233–55234.

[79] *See* 21(a) Report at 41.

[80] *See* 21(a) Report at 40–44.

[81] *See supra* note 42. *See also* infra Section V.B.

[82] *See generally* Exchange Act Release Nos. 48764 (November 7, 2003), 68 FR 64380 (November 13, 2003), and 48946 (December 17, 2003), 68 FR 74678 (December 24, 2003) (''NYSE Governance Changes Approval'').

[83] *Id.*

[84] *Id.*

establishment of a fully independent board of directors composed of 6 to 12 fully independent directors, the NYSE Chief Executive Officer (''CEO''), and the NYSE Chairman.[85] The concept of ''independence'' under the NYSE rules was redefined with respect to directors to exclude essentially all persons with any relationship or association to the exchange, an exchange member, or an exchange listed issuer.[86] A fully independent board committee, the Regulatory Oversight & Regulatory Budget Committee, was established and tasked with overseeing the NYSE's regulatory plans, programs, budget and staffing proposals on an annual basis.[87]

In an effort to ensure that the NYSE's regulatory function was sufficiently independent, a new Chief Regulatory Officer position was created that reports directly to the Regulatory Oversight & Regulatory Budget Committee [88] An additional fully independent committee, the Human Resources & Compensation Committee, was created to set staff compensation.[89] Other fully independent committees included the Audit Committee and the Nominating & Governance Committee, which was designed to ensure that governance procedures are appropriate and to administer the board's annual self-review process.[90]

Because the new definition of independent director excluded most users of the NYSE's services, an advisory Board of Executives was also created to ensure that NYSE constituents continued to have a meaningful voice in the affairs of the exchange.[91] This advisory group was to be composed of 22 individuals representing key NYSE constituencies and tasked primarily with advising the board on operational issues.[92] The Board of Directors is required to meet on at least a quarterly basis both with and without the Board of Executives present.[93] In approving these amendments, the Commission noted the importance of independence of regulatory staff from business pressures.[94]

As discussed further below,[95] another recent concern is the extent to which the profit motive of a demutualized SRO could detract from proper self-regulation. In that regard, the Commission recently approved SRO rule changes that permitted several SROs to convert to for-profit entities.[96] To avoid the potential for member shareholders to wield an in appropriate amount of influence over the regulatory function of the SROs, limits were imposed on the percentage that could be controlled by any one member.[97] SROs have put forth various reasons for demutualizing, but a common theme is an increased ability to more quickly respond to competitive pressures.[98]

In a companion release, the Commission is proposing SRO governance and transparency measures (the ''SRO Governance and Transparency Proposal'') to address a range of concerns, including member ownership controls for demutualized exchanges.[99] If adopted, the SRO Governance and Transparency Proposal, which will be discussed in greater detail below,[100] would impose a variety of restrictions on shareholder owned SROs, including effectively restricting revenue from regulatory operations being used to pay dividends to shareholders.

The Commission seeks public comment on the following specific questions related to conflicts in member regulation:

Question 1: To what extent are the conflicts caused by member funding of SRO operations a concern? Has consolidation within the securities industry, and the dependence of SROs on a relatively small number of firms for the bulk of their funding, or other developments exacerbated this conflict? If other developments have done so, identify them. Is it possible to minimize these conflicts through SRO governance initiatives that are designed to ensure greater independence of the board and key committees from the regulated members?

Question 2: To what extent are member governance conflicts a concern? Have the governance changes recently made by the NYSE and other SROs to enhance their independence been effective in reducing these conflicts? Are there other governance changes that could be made by the SROs that would further reduce these conflicts?

Question 3: Can potential conflicts between the regulatory function and SRO members be effectively managed through the recent enhancements made to SRO governance and the changes proposed by the SRO Governance and Transparency Proposal? Are there other measures the Commission should consider?

2. Inherent Conflicts with Market Operations

In addition to conflicts with members, an SRO's regulatory obligations may conflict with the interests of its own or its affiliate's market operations. The SROs that operate markets (currently, all except the MSRB, the NFA, and the clearing agencies) are responsible for promulgating rules that govern trading in their markets; establishing the necessary systems and procedures to monitor such trading; identifying instances of suspicious trading, such as potential insider trading and market manipulation; and enforcing the Exchange Act, the rules thereunder, and their own rules.[101] If an SRO identifies potential misconduct involving persons or entities within its jurisdiction, the SRO is responsible for conducting a further investigation and bringing a disciplinary action when appropriate. For potential misconduct outside its jurisdiction, an SRO is responsible for making referrals to the Commission or other appropriate agencies and assisting these agencies in their investigations.

As competition among markets grows, the markets that SROs operate will continue to come under increased pressure to attract order flow. This

[85] *Id.* at 74679.

[86] *Id.*

[87] *Id.* at 74681.

[88] *Id.* at 74682.

[89] *Id.* at 74681.

[90] *Id.* at 74680–74681.

[91] *Id.* at 74679–74680.

[92] *Id.*

[93] *Id.* at 74679.

[94] *Id.* at 74687.

[95] *See* infra Section IV.A.4.

[96] *See e.g.*, Securities Exchange Act Release Nos. 45803 (April 23, 2003), 67 FR 21306 (April 30, 2003) (order approving the restructuring of the ISE from a limited liability company to a corporation); 49718 (May 17, 2004), 69 FR 29611 (May 24, 2004) (order approving the demutualization of the PCX); and 49098 (January 16, 2004), 69 FR 3974 (January 27, 2004) (order approving the demutualization of the Phlx).

[97] *Id.*

[98] *See* Securities Exchange Act Release Nos. 49451 (March 19, 2004), 69 FR 16305 (March 29, 2004) (PCX stating that by ''restructuring its business as a stock corporation with business control and management vested in a Board of Directors, the entity will have greater flexibility to develop and execute strategies designed to improve its competitive position than it has under the current membership-cooperative structure'' and that it anticipates that ''by restructuring as a stock corporation, PCX management will be better able to respond quickly to competitive pressures and to make changes to its operations as market conditions warrant, without diminishing the integrity of its regulatory programs.'') and 49098, *supra* note (Phlx stating that it proposed to effect a demutualization for a number of reasons, including to ''expand its sources of capital and revenue; to facilitate its ability to enter into relationships with strategic for financial partners who may be crucial for the Exchange's future development, capital formation and viability; to facilitate the introduction for new products and thus potentially increase transaction volume and Exchange revenues; and to better position itself to react to new opportunities and challenges'').

[99] *See* Exchange Act Release No. 34–50699, (November 18, 2004).

[100] For a more detailed description of the SRO Governance and Transparency Proposal see infraSection V.A.1.

[101] *See e.g.*, Exchange Act Sections 6(b) and 15A(b), 15 U.S.C. 78f(b) and 78*o*–3(b).

business pressure can create a strong conflict between the SRO regulatory and market operations functions. Because increasing inter-market competition has provided members (and those that represent their orders through members) with increasing flexibility as to where to direct order flow, SRO staff may be less inclined to enforce vigorously SRO rules that would cause large liquidity providers to redirect order flow.

For example, one hedge fund typically may account for between 1% and 2% of total daily dollar volume traded on the NYSE.[102] One mutual fund complex may account for as much as 5% of the NYSE's daily trading volume.[103] Approximately half of the 80 million exchange-listed shares executed per day on the CHX is directed to eight specialist firms.[104] Moreover, as of July 2004, the NSX's market share grew to 26.2 percent of the Nasdaq market with the majority of that trading activity being generated by one member, the INET ECN.[105] As of May 2004, the Brut ECN's matched shares reported to the BSE represented 8.7% of overall Nasdaq trading volume.[106]

While regulatory staff is responsible for carrying out self-regulatory obligations, they are also a component of a competitive business organization. As intermarket competition increases, regulatory staff may come under pressure to permit market activity that attracts order flow to their market. Market operations staff may also be less likely to cooperate and communicate with regulatory staff if they think such cooperation or communication will hinder their effort to attract order flow.

In addition, SROs face conflicts in regulating members that are influential in the their markets. For example, in the 21(a) Report concerning the NASD, the Commission found that Nasdaq market makers had exerted substantial influence over the affairs of the NASD through their dominant role in its governance, the administration of the NASD's disciplinary process, and the operation of Nasdaq.[107] Other less favored constituencies, such as retail and institutional investors and other broker-dealers, particularly those day trading firms that heavily used Nasdaq's Small Order Execution System (''SOES Firms''), did not have comparable representation on the key NASD boards and committees.[108]

The Commission found that market maker influence led to a concerted effort by the NASD staff to bring disciplinary actions against SOES firms.[109] Indeed, the 21(a) Report concluded that the NASD made a high priority of enforcement related to violations of its SOES rules by subjecting firms to special ''sweep'' examinations, and devoting substantial resources to monitoring, examining, and bringing disciplinary actions for potential violations of the day trading rules.[110] In contrast, the Commission found that the NASD was far less aggressive with respect to its enforcement of rule violations by market makers.[111]

Another concern is the potential for SRO regulatory staff, in the course of developing rules and examining members, to become overly dependent on members for their understanding of market practices and to lose their independent perspective concerning these practices. A potential loss of objectivity could accompany the greater knowledge and expertise that result from having SRO regulatory staff interwoven with SRO market operations.

Also, SROs may have a tendency to abuse their SRO status by over-regulating members that operate markets that compete with the SRO's own market for order flow.[112] Indeed, among other reasons, these concerns led the Commission to require the NASD to establish the Alternative Display Facility (''ADF'').[113] Exchange Act rule 11Ac1–1 [114] requires that SRO members communicate their best bids and offers to an SRO and in the late 1990s broker-dealer choice as to where to post quotes in Nasdaq securities was effectively limited to Nasdaq.[115] Thus, certain users of Nasdaq were concerned that they would be put at a distinct competitive disadvantage if they were compelled to provide their best bids and offers to the exclusive securities information processor (''SIP'') for Nasdaq securities through the new SuperMontage system.[116] These users argued that, not only would their quotes be subject to a competing market's trading rules, but that the situation would be rife for abuse because of Nasdaq functioning both as a regulator and competitor of the ECNs.[117] Thus, before permitting the launch of Nasdaq's SuperMontage, the Commission required that the NASD provide an alternative, the ADF, to Nasdaq's SuperMontage on which to quote Nasdaq securities.[118]

The Commission specifically seeks public comment on the following questions related to conflicts with market operations:

Question 4: To what extent do conflicts exist between SRO regulatory and market operations functions? Has increased intermarket competition exacerbated this potential conflict? Are markets today attempting to use ''lax regulation'' as a means to attract business? Are they attempting to use ''aggressive regulation'' as a weapon against competitors? Is it unrealistic to expect a ''cost center,'' such as regulation, to resist pressure from a function that generates business revenue in a modern business enterprise?

Question 5: To what extent has internal SRO separation of these functions addressed these concerns? Has the restructuring of the NASD, and the recent governance changes of the NYSE and other SROs to enhance their independence, been effective in better insulating the regulatory function from the market function?

Question 6: Can potential conflicts between the regulatory function and

[102] *See* Citadel Investment Group LLC Web site (*https://www.citadelgroup.com/*).

[103] Charles Forelle, *Fidelity Opposes NYSE Proposal Over Limits on ''Sweeps'' of Trades*, The Wall Street Journal, August 17, 2004, at C3.

[104] Traders Magazine, *The Windy City's Auto-Ex Democracy* (March 1, 2004).

[105] Isabelle Clary, Markets Editor, Securities Industry News, *Brut Buy May Boost Nasdaq*, (September 6, 2004).

[106] Isabelle Clary, Markets Editor, Securities Industry News, *Nasdaq Strikes Back with Brut Deal* (May 31, 2004). The Brut ECN has subsequently shifted the reporting of all of its Tape C trading activity to Nasdaq. *See* Nasdaq Head Trader Alert #2004–115, Nasdaq Completes Acquisition of Brut LLC (September 7, 2004).

[107] *See* 21(a) Report at 40–44.

[108] *Id.*

[109] *Id.*

[110] *Id.*

[111] For example, complaints related to market makers failing to abide by the firm quote rule were effectively discouraged both by an ineffective procedure for enforcing the rule and by the absence of adequate sanctions for demonstrated misconduct. The Commission found that the small number of NASD formal disciplinary actions for market related rule violations brought against joint NYSE/NASD member firms, which would encompass the larger firms in the securities industry, was cause for serious concern over the NASD's enforcement priorities. *See* 21(a) Report at 40–44.

[112] Securities and Exchange Commission Concept Release, Regulation of Exchanges, S7–16–97, Exchange Act Release No. 38672 (May 23, 1997), 62 FR 30485 (June 4, 1997) (''ATS Concept Release''). The Commission acknowledged that conflicts could become particularly acute when an ATS member is regulated by an SRO that operates a competing market. *Id.* at 30486–30487.

[113] *See* Exchange Act Release No. 43863 (January 19, 2001), 66 FR 8020 (January 26, 2001); Exchange Act Release No. 42166 (November 22, 1999), 64 FR 68125 (December 6, 1999); Exchange Act Release No. 42573 (March 23, 2000), 65 FR 16981 (March 30, 2000); Exchange Act Release No. 43133 (August 10, 2000), 65 FR 49842 (August 15, 2000); and Exchange Act Release No. 43514 (November 3, 2000), 65 FR 69084 (November 15, 2000). The Commission received 104 comments regarding Nasdaq's order collector, aggregator, and execution facility (''SuperMontage'') proposal.

[114] 17 CFR 240.11Ac1–1.

[115] 66 FR 8020, 8052–8055.

[116] *Id.*

[117] *Id.*

[118] *Id.*

SRO market operations be effectively managed through the recent enhancements made to SRO governance and the changes proposed by the SRO Governance and Transparency Proposal? Are there other measures the Commission should consider?

3. Inherent Conflicts With Issuers

Another potential SRO conflict is with listed issuers. The SROs promulgate and administer listing standards that govern the securities that may be traded in their markets. For corporate securities, these rules include minimum financial qualifications and reporting requirements for their issuers. Obtaining a listing on a prominent SRO market provides corporate issuers with enhanced visibility and prestige in the eyes of investors, as well as the appearance of a well-operated and well-regulated trading market for their securities. An active market for secondary trading in a corporation's securities benefits not only its shareholders, but also the corporation itself through enhanced capital-raising capacities.

SRO listing standards also have a major role in corporate governance, particularly since the passage of the Sarbanes-Oxley Act.[119] Specifically, under recently adopted rules, SROs are prohibited from listing any security of an issuer that is not in compliance with certain standards.[120] Each member of the audit committee of the issuer must be independent according to specified criteria.[121] In addition, the audit committee of each issuer must be directly responsible for the appointment, compensation, retention and oversight of the work of any registered public accounting firm engaged for the purpose of preparing or issuing an audit report or performing other audit, review or attest services for the issuer, and each such registered public accounting firm must report directly to the audit committee.[122] Moreover, each audit committee must establish procedures for the receipt, retention and treatment of complaints regarding accounting, internal accounting controls or auditing matters, including procedures for the confidential, anonymous submission by employees of the issuer of concerns regarding questionable accounting or auditing matters.[123] Each audit committee must also have the authority to engage independent counsel and other advisors, as it determines necessary, to carry out its duties and each issuer must provide appropriate funding for the audit committee.[124]

The SROs are responsible for monitoring issuers and delisting the securities of those that fail to meet SRO minimum requirements, but also compete vigorously to attract and retain listings, as illustrated recently by the high profile competition to list the Google Initial Public Offering.[125] This competition has been heightened by new listing venues. For instance, the equity trading facility of the PCX, ArcaEx, has been actively courting issuers to list[126] and in the Spring of 2004, Nasdaq launched a high profile dual listing program for NYSE stocks.[127] Moreover, there are indications that international stock exchanges are becoming more competitive with respect to attracting foreign companies to list on their markets (rather than on U.S. markets).[128]

As issuers are offered new alternatives as to markets on which to list their securities, SROs face increasing competitive pressure to gain and retain listings. As with SRO competition for members and order flow, competition for issuers may cause an SRO to fail to discharge its self-regulatory responsibilities properly. This can take the form of admitting to trading issuers that fail to satisfy initial listing standards; delaying the delisting of issuers that no longer satisfy maintenance standards; failing to enforce listing standards (including the new issuer corporate governance standards); and reducing (or even eliminating) listing fees. This competition also can reveal itself in an unwillingness to restrict issuer activities or impose requirements that may be more stringent than similar rules of competitor SROs.

Another issue with respect to listings relates to conflicts associated with listings of members' proprietary products such as Exchange Traded Funds (''ETFs''). In some instances, the creator of a proprietary product may be an SRO member that becomes the specialist or primary market maker of the product. In the equity markets, the issuer typically has authority with respect to where the stock is to be listed. With respect to such proprietary products, the product creator (and potentially the product's sole specialist or primary market maker) may have significant authority as to where the product is listed. When an SRO member is a combined member/issuer of a popular product and that member wields authority with respect to transferring the listing of the product to another SRO, the SRO may be disinclined to regulate that member vigorously.

The Commission specifically seeks public comment on the following questions related to conflicts with issuers:

Question 7: To what extent have conflicts arisen between SRO regulatory and issuer listing functions? Has the recent increase in competition among SRO markets for listings created incentives to admit issuers that fail to satisfy initial listing standards or delay the delisting of issuers that no longer satisfy maintenance standards? To the extent increased competition for listings has caused SROs to waive or lower listing fees, has this negatively impacted regulatory funding and further inhibited enforcement of listing standards?

Question 8: Has the sponsorship of popular proprietary products by member firms compounded the inherent conflicts discussed above with both members and issuers? Specifically, are SROs disinclined to regulate vigorously either the trading activity of popular proprietary products or the activity of members firms that are the sponsors of such products?

4. Inherent Conflicts With Shareholders

Another significant conflict of interest for SRO responsibilities is with SRO shareholders. SRO demutualization raises the concern that the profit motive of a shareholder-owned SRO could detract from proper self-regulation. For instance, shareholder owned SROs may commit insufficient funds to regulatory operations or use their disciplinary function as a revenue generator with respect to member firms that operate competing trading systems or whose trading activity is otherwise perceived as undesirable. Moreover, as with the inherent conflicts discussed above, this conflict can be exacerbated by increased intermarket competition.[129]

[119] Pub. L. 107–204, 116 Stat. 745 (2002).

[120] *See generally* Exchange Act Release No. 47654 (April 9, 2003), 68 FR 18788 (April 16, 2003).

[121] *Id.* at 18790.

[122] *Id.*

[123] *Id.*

[124] *Id.*

[125] Andrei Postelnicu, *Listing Chief Sets Sights Abroad,* Financial Times, August 23, 2004, at 25.

[126] Andrei Postelnicu, *ArcaEx launches listings drive,* Financial Times, September 16, 2004, at 22.

[127] *Nasdaq CEO: Competitive Practices Could Have Helped NYSE,* Dow Jones News Service, August 25, 2004.

[128] Yuka Hayashi, *Foreign Firms Consider Listing Shares in Tokyo,* Wall Street Journal, October 18, 2004, at C16.

[129] It is also possible for demutualization of SROs to cause complicated transactional issues to arise. For instance, complications could surface if a demutualized SRO bid to purchase a listed company. Another problematic situation could be one in which a demutualized SRO competes with

Continued

A variety of ownership controls for demutualized SROs can potentially prevent some of these conflicts.[130] Indeed, as previously noted, this concept release is being published in conjunction with the SRO Governance and Transparency Proposal, which would, if adopted, impose a variety of restrictions, including an effective restriction on revenue from regulatory operations being used to pay dividends to shareholders.

The Commission specifically seeks public comment on the following questions related to conflicts with shareholders:

Question 9: What are the conflicts between a demutualized SRO's regulatory responsibilities and the profit-making orientation of its shareholders? To what extent do they heighten the inherent SRO conflicts with members, market operations, and listed issuers discussed above?

Question 10: Can potential conflicts between the regulatory function and SRO shareholders be effectively managed through the recent enhancements to SRO governance and the changes proposed by the SRO Governance and Transparency Proposal? Or are there other measures the Commission should take to help ensure that the effectiveness of the regulatory function is not diminished?

B. Inefficiencies of Multiple SROs

Securities industry self-regulation carries with it an inherent inefficiency in that it can cause duplicative and potentially conflicting regulation. Specifically, the existence of multiple SROs can result in duplicative and conflicting SRO rules, rule interpretations, and inspection regimes. The system can also result in redundant SRO regulatory staff and infrastructure across SROs.

Congress and the Commission have put in place methods for reducing a certain amount of regulatory duplication. Pursuant to Exchange Act Section 17(d) and Rule 17d–1,[131] when a member belongs to more than one SRO, the SEC shall designate the responsibility to one SRO for examining the member for compliance with applicable financial responsibility rules.[132] The undesignated SRO is relieved of responsibility for examining the member for compliance with financial responsibility rules.[133] In addition, Rule 17d–2 under the Exchange Act permits SROs to establish Commission approved joint plans for allocating regulatory responsibilities with respect to common members.[134] An SRO participating in such a regulatory plan approved by the Commission is relieved of regulatory responsibilities with respect to a broker-dealer member, if those regulatory responsibilities have been allocated to another SRO under the regulatory plan.[135]

The options SROs, for example, have utilized a 17d–2 agreement to reduce regulatory redundancies.[136] The options markets' 17d–2 Plan reduces regulatory duplication for a large number of firms currently members of two or more of the SRO participants by equitably allocating regulatory responsibility for a set of options sales practice rules that are substantially identical for each of the SRO participants.[137]

While the potential for the SRO system to cause regulatory redundancies is not a novel issue for the Commission,[138] it appears that the inefficiencies caused by the SRO system are being aggravated by greater market fragmentation of order flow among SROs. Thus, a recent U.S. General Accounting Office ("GAO") analysis is worth discussing. In May of 2002, the GAO issued a report, which specifically focused on the implications of market fragmentation with respect to securities industry regulatory redundancies.[139] It ultimately discussed a broad range of issues related to the relationship between self-regulation and intermarket competition for order flow. The GAO Report recommended that the Commission work with the SROs and broker-dealers to implement a formal process for systematically identifying and addressing material regulatory inefficiencies caused by differences in rules and rule interpretations among SROs and by multiple examinations of broker-dealers.[140] In the wake of the GAO Report, the Commission supported the formation of a joint NASD and NYSE task force with the mission of examining their conflicting rules and determining how those conflicts could be resolved. The Commission has been working with the SROs in this respect and facilitating SRO rule amendments when appropriate.[141]

More recently, in light of issues raised in a petition for rulemaking filed by Nasdaq, the Commission published a concept release covering the regulation of intermarket trading of Nasdaq securities.[142] The Intermarket Trading Concept Release discussed Nasdaq's concern about the potential development of "regulatory arbitrage" when SRO rules are inconsistent across markets.[143] Specifically, according to Nasdaq, this type of arbitrage could result in the attraction of order flow and members to certain SROs over others because of the prospect of lax regulation.[144] The Intermarket Trading Concept Release sought public comment on the importance of uniformity with respect to a variety of rules related to intermarket trading of Nasdaq-listed securities, including rules related to market manipulation, illegal short

a listed company for the purchase of a third entity. Conflicts would clearly present themselves in these situations.

[130] For instance, several exchanges that have converted to shareholder-owned structures have limited the ability of any person, including their members, to directly or indirectly own and vote more than a certain percentage of the interest in the exchange. *See e.g.*, Securities Exchange Act Release Nos. 49718 and 49098. Exchanges also have similar limits on concentration of ownership of facilities that are separate corporate entities from the exchange. *See e.g.*, Securities Exchange Act Release Nos. 50170 and 49067. The Commission approved these limitations on a case-by-case basis pursuant to the rule filing process of Section 19(b) of the Exchange Act and Rule 19b–4 thereunder. 15 U.S.C. 78s(b) and 17 CFR 240.19b–4.

[131] 15 U.S.C. 78q and 17 CFR 240.17d–1.

[132] 17 CFR 240.17d–1.

[133] *Id.*

[134] 17 CFR 240.17d–2.

[135] *Id.*

[136] *See generally* Exchange Act Release No. 49197 (February 5, 2004), 69 FR 7046 (February 12, 2004).

[137] Under the plan, the SRO participant responsible for conducting options-related sales practice examinations of a firm, and investigating options-related customer complaints and terminations for cause of associated persons of that firm, is known as the firm's Designated Options Examining Authority ("DOEA"). Pursuant to the plan, any other SRO of which the firm is a member is relieved of these responsibilities during the period the firm is assigned to a DOEA. The options 17d–2 Plan is administered by a committee, the Options Self-Regulatory Council, which is composed of one representative from each SRO signatory to the plan. Under the Options 17d–2 plan, common options rules across the different options SROs have been designated and are enforced by the DOEA. The DOEAs for common members are assigned based on a variety of factors, including the most equitable allocation of the regulatory burden of carrying out the duties of the DOEA. In addition, all DOEA assignments are made by a majority vote of all SRO participants of the plan. Common rules covered by the plan include those related to the opening of options accounts, the supervision of options trading, and customer suitability for trading options. *See e.g.*, Exchange Act Release No. 49197 (February 5, 2004), 69 FR 7046 (February 12, 2004).

[138] *See* supra Section II.

[139] U.S. General Accounting Office Report to Congressional Committees, "Securities Markets Competition and Multiple Regulators Heighten Concern about Self-Regulation" (May 2004) ("GAO Report").

[140] GAO Report at 30.

[141] *See e.g.*, notice and comment process for the adoption of a uniform NASD and NYSE "branch office" definition. Exchange Act Release Nos. 48897 (December 9, 2003), 68 FR 70059 (December 16, 2003); 46888 (November 22, 2002), 67 FR 72257 (December 4, 2002).

[142] Concept Release: Request for Comment on Nasdaq Petition Relating to the Regulation of Nasdaq-Listed Securities, Exchange Act Release No. 47849 (May 14, 2003), 68 FR 27722 (May 20, 2003) ("Intermarket Trading Concept Release").

[143] Intermarket Trading Concept Release at 27724.

[144] *Id.*

selling, insider trading, fraud, front running, marking the open or close, non-compliance with the limit order display rule, and non-compliance with the firm quote rule.[145] The Intermarket Trading Concept Release solicited comment on whether uniform rules are necessary to prevent regulatory arbitrage.[146] It also noted Nasdaq's contention that the disparities in rules between SROs pose a serious threat to investor protection and discussed Nasdaq's request that the Commission exercise its authority under Sections 12(f)(2) and (3) of the Act[147] to prohibit the launch or continuation of Nasdaq trading by any market that failed to adopt adequate regulatory protections, including rules related to inter-market trading issues.[148]

The Commission received a variety of comments in response to the Intermarket Trading Concept Release. Commenters, including certain SROs and ECNs that compete with Nasdaq for order flow, argued that there is, in fact, no unequal regulation across markets and that trading that falls within each SRO's purview is effectively regulated.[149] Some commenters voiced a qualified endorsement of uniform rules in certain areas, but were careful to note that uniform rules should in no way restrict each SRO's ability to craft rules that reinforce its own unique intra-market structures or competitive business models.[150] At least one commenter even supported the creation of a single independent regulator that would be responsible for regulating all broker-dealers in all markets.[151]

Thus, while the Intermarket Trading Concept Release drew out thoughtful public commentary on discrete issues related to the SRO system's regulatory inefficiencies and redundancies, this concept release seeks public commentary on these issues in the broader context of the efficacy of the SRO system overall. Specifically, the Commission specifically seeks public comment on the following questions:

Question 11: Is the lack of intermarket rules across markets trading the same type of securities causing regulatory arbitrage and, if so, what is the impact of this on the SRO system? Should this issue be addressed through changes at the SRO system level, rather than at the individual SRO level?

Question 12: How significant are the inefficiencies resulting from multiple SROs overseeing the activities of the same members? In what areas do these issues primarily arise?

C. Intermarket Surveillance

Another area in which the SRO system has recently come under increasing strain because of market fragmentation is with respect to SRO and Commission supervision of intermarket trading. When order flow was largely concentrated in the primary markets, traders had limited ability to cloak illicit activity by spreading trades across markets. When trading takes place in multiple active markets, however, it is possible for traders to veil illegal trading activity by dispersing trades across markets.

The Intermarket Trading Concept Release specifically sought public comment on this topic.[152] The release focused public attention on Nasdaq's contention that its extensive audit trail data was of limited use for cross-market surveillance, because it cannot capture relevant data for executions that take place on other markets trading Nasdaq securities, and other markets do not have comparable systems that can interact with NASD's Order Audit Trail System (''OATS''), which captures regulatory data concerning the important stages in the life of a trade.[153]

The Intermarket Trading Concept Release also focused comment on the role of the Intermarket Surveillance Group (''ISG''), which is an industry organization created in 1983 to coordinate intermarket surveillance among the self-regulatory organizations by cooperatively sharing regulatory information pursuant to a written agreement between the parties.[154] The goal of the ISG's information sharing is to coordinate regulatory efforts to address potential intermarket trading abuses and manipulations.[155] Although the ISG Agreement was not established under Section 11A or 17(d) of the Securities Exchange Act of 1934,[156] ISG asserts that the Commission has required new markets to become ISG members as a condition of registration, thus recognizing its importance.[157] ISG's full members are the Amex, BSE, CBOE, CHX, NSX, ISE, NASD, NYSE, PCX, and the Phlx (collectively ''Full Members'').[158] Each of the Full Members is an SRO for which the Commission has direct oversight.[159] As

[145] *Id.*

[146] *Id.*

[147] Exchange Act Sections 12(f)(2) and (3), 15 U.S.C. 78l(f)(2) and (3). Intermarket Trading Concept Release at 27725.

[148] *See* Intermarket Trading Concept Release at 27724–27725.

[149] *See* letter from John S. Markle, Associate General Counsel, Ameritrade Holding Company, to Jonathan G. Katz, Secretary, Commission, pp. 2–3 (July 10, 2003) (''Ameritrade Letter''); letter from William O'Brien, Chief Operating Officer, Brut, LLC, to Jonathan G. Katz, Secretary, the Commission, p. 2 (June 19, 2003) (''Brut Letter''); letter from Jeffrey T. Brown, Cincinnati Stock Exchange, to Jonathan G. Katz, Secretary, Commission, pp. 5–6 (June 19, 2003) (''CSE Letter''); letter from Michael J. Simon, Senior Vice President and Secretary, ISE, to Jonathan G. Katz, Secretary, Commission, p. 2 (June 19, 2003) (''ISE Letter''); letter from Brian F. Colby, Chairman, Intermarket Surveillance Group, to Jonathan G. Katz, Secretary, Commission, pp. 1–2 (June 18, 2003) (''ISG Letter''); letter from Darla C. Stuckey, Corporate Secretary, NYSE, to Jonathan G. Katz, Secretary, Commission, pp. 4–5 (June 19, 2003) (''NYSE letter''); letter from Meyer S. Frucher, Phlx, to Jonathan G. Katz, Secretary, Commission, pp. 2–6 (June 17, 2003) (''Phlx Letter'').

[150] *See* Ameritrade Letter pp. 2–3; letter from Kim Bang, Bloomberg Tradebook LLC, to Jonathan G. Katz, Secretary, Commission, p. 2 (June 20, 2003) (Bloomberg letter); Brut letter pp. 3–4, letter from Richard Ketchum, General Counsel, Global Corporate & Investment Bank, Citigroup Global Capital Markets, to Jonathan G. Katz, Secretary, Commission, pp. 7–9 (July 8, 2003) (''Citigroup letter''); letter from Edward J. Joyce, President and Chief Operating Officer, Chicago Board Options Exchange, Incorporated, to Jonathan G. Katz, Secretary, Commission, p. 2 (June 30, 2003) (''CBOE letter''); letter from Eric Schwartz, Managing Director, Goldman Sachs & Co., and Duncan Niederauer, Co-Chief Executive Officer, Spear, Leeds & Kellogg, L.P., to Jonathan G. Katz, Secretary , Commission, p. 2 (July 25, 2003) (''GS/SLK letter''); letter from Craig S. Tyle, General Counsel, Investment Company Institute , to Jonathan G. Katz, Secretary, Commission, p. 1 (June 19, 2003) (''ICI letter''); letter from Barbara Z. Sweeney, Senior Vice President and Corporate Secretary, NASD, to Jonathan G. Katz, Secretary, Commission, p. 12 (June 20, 2003) (''NASD letter''); letter from Donald D. Kittell, Executive Vice President, Securities Industry Association, to Jonathan G. Katz, Secretary, Commission, pp. 3–5 (June 27, 2003) (''SIA letter''); and Mary McDermott Holland, Mark Madoff, and John C. Giesea, Securities Traders Association, to Jonathan G. Katz, Secretary, Commission, p. 3 (June 19, 2003) (''STA letter'').

[151] *See* letter from W. Hardy Callcott, SVP & General Counsel, Charles Schwab & Co., Inc., to Jonathan G. Katz, Secretary, Commission (July 7, 2003) (''Schwab letter'').

[152] Intermarket Trading Concept Release at 27724.

[153] Intermarket Trading Concept Release at 27724. OATS is part of an integrated audit trail system, developed by NASD. It provides a source of timed, sequenced order events, which, when combined with existing quotation and trading information, assists in the surveillance of the Nasdaq market. *See* OATS Subscriber Manual 2004.3, 1–1 (October 4, 2004). The general objective of OATS is to recreate daily market activity by capturing and maintaining order data reported by member firms. OATS Subscriber Manual at 2–1.

[154] Intermarket Trading Concept Release at 27723.

[155] *Id.*

[156] 15 U.S.C. 78k–1 or 78q(d).

[157] *See* ISG letter at 1.

[158] In its comment letter, ISG states that it has also established an affiliate category of membership to all futures exchanges and non-U.S. organizations to join. Moroever, ISG notes that certain ISG affiliate members (One Chicago LLC, Nasdaq LIFFE Markets LLC, CME Inc. and Island Futures Exchange LLC) by virtue of their status as ''notice registered National Securities Exchanges'' and as signatories to the Addendum for Securities Futures products, have already submitted themselves to elements of the ISG Agreement, as amended in 1994. As such, ISG maintains they have accepted ISG as the appropriate forum for resolving inter-market issues. *See* ISG Letter p. 1–2.

[159] *Id.*

a result, the regulatory procedures that these SROs have developed, individually and jointly, including those developed for insider trading and certain types of market manipulation, are subject to Commission jurisdiction and are regularly examined for sufficiency. [160]

In its petition, Nasdaq asserted that, for a variety of reasons, the data, received through ISG regarding other markets, is insufficient to enable Nasdaq to properly surveil intermarket trading activity. [161] Nasdaq also posited that consolidated regulation of Nasdaq trading across all markets for intermarket surveillance purposes would be fundamentally more effective because of the flaws of ISG data and because the ISG is composed of some members that do not necessarily trade Nasdaq securities (including certain non-Full Members that are not regulated as SROs by the Commission). [162]

In response to the Intermarket Trading Concept Release, the Commission received a variety of comments on intermarket surveillance and order audit trail issues. [163] Some commenters argued that existing audit trail systems were well designed, even though they did not interact with Nasdaq's. [164] In addition, many commenters were concerned that complying with multiple SROs' different order audit trail systems would be burdensome and expensive to implement and administer. [165] Other commenters argued that Nasdaq had understated the effectiveness of ISG and that the organization should be allowed to continue in its role as the facilitator of regulatory data sharing among markets. [166]

In its comment letter, the ISG described its consolidated audit trail system, which supplements individual markets' surveillance systems by facilitating the analysis and review of information concerning potential trading violations. [167] By allowing the SROs to share their regulatory information, ISG asserts, the SROs are able to view trading activity in the context of all markets' clearing level quote and trade data. [168] The ISG argued that its Equity Audit Trail system provides a consolidated view across all markets of quotes and trades, including clearing information. [169] Moreover, ISG stated that its systems serve their purpose well and that no other market had raised the issues that Nasdaq raised in its petition. [170] Specifically, the ISG claimed that neither the time delays in receiving information through ISG nor the lack of a uniform synchronization protocol had proven to be problematic. [171]

In the NYSE's comment letter, it generally supported the traditional role of the ISG. [172] Moreover, the NYSE described its own order audit trail, the Order Tracking System (''OTS''), and how its rules are comparable to those of the NASD's OATS. [173] The NYSE raised the possibility of the Commission requiring that each individual market establish an order audit trail system similar to the NYSE's and the NASD's and mandating that the data from these separate order audit trails be integrated into the ISG's consolidated order audit trail. [174]

In its comment letter in response to the Intermarket Trading Concept Release, the NASD echoed many of the concerns raised by Nasdaq in its petition. Specifically, the NASD argued that the current model of coordinated regulation results in regulatory gaps and that potential misconduct can occur across markets undetected by regulators. [175] It also argued that the less detailed regulatory information collected by the ISG lacks certain critical pieces of information to effectively assist SROs in regulating intermarket trading activity. [176]

With respect to the options markets, in September of 2000, the Commission accepted settlement agreements from the Amex, CBOE, Phlx, and PCX in connection with administrative proceedings, alleging, among other things, that these options exchanges had inadequately discharged their obligations as SROs by failing to enforce compliance with certain rules, including order handling rules, reporting rules, and rules prohibiting anticompetitive conduct. [177] As a result, in settling the Commission's enforcement action, the options exchanges undertook a variety of steps to prevent future self-regulatory lapses, including the design and implementation of a consolidated options audit trail system (''COATS''). [178] COATS would enable the options exchanges to reconstruct markets promptly, effectively surveil them and enforce order handling, firm quote, trade reporting and other rules. [179] The full extent to which COATS effectively enhances intermarket options surveillance is not known as of yet because the system is in the final stage of its implementation. COATS, however, suggests the potential for a consolidated audit trail for the equity markets.

While the full implementation of robust intermarket order audit trails would be a significant step forward, an order audit trail is simply a tool that can be used by regulators to better surveil for illicit trading activity. In the 2000 Options Settlement, the options exchanges undertook to design and implement, concurrent with the design and implementation of COATS, effective surveillance systems to use the newly available COATS data to enforce the federal securities laws and SRO rules. [180] Thus, even when COATS is fully implemented and even if a similar intermarket audit trail were developed for the equity markets, the SRO regulatory function would still play a critical role in the regulation of intermarket trading.

The Commission specifically seeks public comment on the following questions related to intermarket surveillance and regulation:

Question 13: To what extent does our market model of multiple competing SROs create gaps in intermarket trading surveillance? What types of illicit trading activity in particular can be hidden from regulators by dispersing trading across multiple markets?

Question 14: How effectively does the ISG serve as a facilitator of regulatory data sharing and surveillance coordination among SROs? Is the ISG's order audit trail effective as a regulatory

[160] *Id.*

[161] For instance, ISG audit trail information is clearing level data, rather than executing firm level data. According to Nasdaq, the ISG data time fields are not generated by clocks subject to uniform synchronization protocols, as is the case with OATS data. Moreover, Nasdaq states that ISG data is transmitted two days after the trade takes place and in a format that cannot be readily integrated into the NASD's automated surveillance systems. Nasdaq argued that the two day delay significantly hinders NASD's ability to investigate unlawful trading activity on a real-time basis and can prevent NASD from obtaining non-stale regulatory information in an ongoing investigation. Inter-Market Trading Concept Release at 27723.

[162] *Id.*

[163] *See* infra notes 164–176.

[164] CSE letter at 3–7 and ISG letter at 2.

[165] Ameritrade letter at 3; CSE letter at 17–18; ISE letter at 3–4; GS/SLK letter at 3–4; Phlx letter at 6–7; SIA letter at 4; STA letter at 3.

[166] Ameritrade letter at 2; Brut letter at 6; CBOE letter at 2; CSE letter at 10–13; ISE letter at 3–4; ISG letter at 2; NYSE letter at 3–5; Phlx letter at 6–7; and SIA letter at 7.

[167] ISG letter at 2.

[168] *Id.*

[169] *Id.*

[170] ISG letter at 2–3.

[171] ISG letter at 2–3.

[172] *See generally* NYSE letter.

[173] NYSE letter at 4–5.

[174] NYSE letter at 4–5.

[175] NASD letter at 9.

[176] NASD letter at 8.

[177] *See* Exchange Act Release No. 43268 (September 11, 2000), File No. 3–10282, (''Options Settlement'').

[178] *See Id.* at Section IV.B.e.

[179] *Id.*

[180] *Id.*

tool? How feasible would it be to require all markets to adopt order audit trails similar to those of the NYSE and the NASD and ultimately to integrate all markets' order audit trails into the ISG's consolidated order audit trail?

Question 15: How similar are the order audit trail systems of the NYSE and the NASD? Could they be merged into one consolidated system and what would be the benefits of such a consolidated system? Should NASD's OATS or NYSE's OTS requirements be extended to all equity markets to enhance the ability of SROs to surveill intermarket activity? If so, could all markets' individual order audit trails be successfully integrated into the ISG's consolidated order audit trail or another consolidated system? How useful a regulatory tool would the ISG's consolidated order audit trail system be if all markets were required to adopt their own order audit trail systems and their data was required to be integrated into the ISG's?

Question 16: To what extent is there a need for an order audit trail to provide crossover surveillance between the equities and options markets? To what extent would such crossover surveillance detect specific types of illicit trading activity?

D. Funding

Another feature of the SRO system to be discussed relates to the funding of SRO regulatory operations. One of the key historical benefits of the SRO system is its self-funding structure, which leverages the limited resources of the Commission. Experience appears to indicate that the Commission, in its current form, does not have the resources to effectively carry out on its own the full panoply of duties for which the SROs are currently responsible. In 1983, after 18 years of experience with directly regulating over-the-counter broker-dealer activity through the SEC Only (''SECO'') program,[181] the regime was repealed.[182] Congress amended the Exchange Act provisions covering direct regulation of broker dealers by the SEC and imposed compulsory SRO membership.[183]

At the time of the repeal of the SECO program, the House Committee on Energy and Commerce reported to the Committee of the Whole House that the SECO program was unnecessarily costly and diverted the SEC's limited resources away from areas of major concern, merely to duplicate the functions of the NASD.[184] The House Committee stated ''that any attempt to put SECO regulation on a par with that provided by the NASD would require significant expenditures by the Commission for additional staff and administrative costs.'' [185] The committee also noted that SROs were better able to maintain ethical standards for the industry and to perform certain detailed oversight functions.[186] The House also cited the limitations of enforcement and compliance remedies available to the Commission in comparison to the remedies available to the NASD.[187]

In the Market 2000 Report, the Commission's staff provided its retrospective impression of the SECO program's performance. The staff noted its belief that the SECO experience illustrated ''that the resources necessary for the Commission to assume SRO regulatory functions directly and effectively are not realistically attainable.'' [188] The SECO experience demonstrated the important role that SROs play in maximizing the Commission's limited resources. It also illustrated that regulation must be properly funded and have sufficient resources to be effective. In that regard, the most finely-balanced SRO structure will not ensure that SRO statutory obligations are met, if regulatory operations are insufficiently funded. Thus, SRO funding arrangements are critical to the SRO system.[189]

1. Overview

While Congress was fairly prescriptive in its initial enactment of the Exchange Act and in subsequent amendments as to the standing responsibilities of SROs, it has not provided explicit guidance as to the proper levels or methods of funding for self-regulatory operations.[190] Section 6 of the Exchange Act, which addresses the registration of national securities exchanges, requires that ''the rules of the exchange provide for the equitable allocation of reasonable dues, fees, and other charges among its members and issuers and other persons using its facilities.'' [191] Section 15A contains a similar provision in connection with the registration of national securities associations.[192] These provisions also require that an SRO be ''so organized and [have] the capacity to be able to carry out the purposes'' of the Exchange Act and ''to comply, and * * * to enforce compliance by its members, and persons associated with its members, with the provisions' of the Exchange Act.[193] Accordingly, while Congress provided only general guidance with respect to SRO funding, a reasonable reading of the Exchange Act indicates that it intended that regulatory funding be sufficient to permit SROs to fulfill their statutory responsibilities under the Exchange Act, and contemplated that such funding would be achieved through equitable assessments on the members, issuers, and other users of an SRO's facilities.

The Commission to date has not issued detailed rules specifying proper funding levels of SRO regulatory programs, or how costs should be allocated among the various SRO constituencies. Rather, the Commission has examined the SROs to determine whether they are complying with their statutory responsibilities. This approach was developed in response to the diverse characteristics and roles of the various SROs and the markets they operate. The mechanics of SRO funding, including the amount of revenue that is spent on regulation and how that amount is allocated among various regulatory operations, is related to the type of market that an SRO is operating. Prior to the SRO Governance and Transparency Proposal, the Commission had not proposed requiring a single

[181] The SECO program was implemented because neither the Exchange Act nor the Maloney Act compelled broker-dealers to become SRO members. In 1964, the Commission was in favor of compulsory membership in the NASD. Congress, however, opted for Commission regulation of broker-dealers who were not members of an association. Congress intended the SECO regulations to mirror the substantive and most of the procedural requirements of the NASD so that SECO firms would not enjoy a competitive advantage over NASD members or escape the regulation of ethical standards. Consequently, the Commission was tasked with designing rules to promote just and equitable principles of trade; to regulate the training and competency of securities industry professionals; to adopt regulations regarding broker-dealers and associated persons qualifications and training; and to adopt standards to cooperate with associations on qualification exams and exam fees. *See* Market 2000 Report VI–6.

[182] *See* Pub L. 98–38; Exchange Act Release No. 20409 (November 22, 1983), 48 FR 53688(November 29, 1983).

[183] *Id. See also* Exchange Act Section 15, 15 U.S.C. 78o.

[184] H.R. Rep. No. 98–106 (1983).

[185] H.R. Rep. No. 98–106, at 7 (1983).

[186] *Id.*

[187] *Id.* at 6.

[188] *See* Market 2000 Report at VI–6.

[189] As noted above, two ongoing Commission rulemakings have a bearing on SRO funding. First, proposed Reg NMS contains a provision that would reallocate market data revenues to encourage price formation. The Commission is also proposing the SRO Governance and Transparency Proposal, a rulemaking that would greatly increase SRO transparency with respect to funding (including regulatory funding) and funding allocations.

[190] *See generally* Exchange Act Sections 6 and 15A, 15 U.S.C. 78f and 78o–3.

[191] Exchange Act Section 6(b)(4), 15 U.S.C. 78f(b)(4).

[192] *See* Exchange Act Section 15A(b)(5), 15 U.S.C. 78o-3(b)(5).

[193] *See* Exchange Act Section 15A(b)(2) and 6(b)(1) 15 U.S.C. 78o-3(b)(2) and 78f(b)(1).

regulatory structure for all SROs, and the financial structure of each individual SRO is a result of a variety of factors, including the SRO's particular history and competitive position. Thus, each SRO and its financial structure is, to a certain extent, unique. While this uniqueness can result in different levels of SRO funding across markets, it also is a reflection of one of the primary underpinnings of the National Market System. Specifically, by fostering an environment in which diverse markets with diverse business models compete within a unified National Market System, investors and market participants benefit.[194]

The ''appropriate'' amount of funding to be spent by SROs on regulatory operations is governed by a variety of factors, including the SRO's business model, trading systems, regulatory responsibilities, and types of members. For instance, electronic marketplaces may be able to supervise trading occurring in their markets at lower cost than floor-based markets because their trading systems may capture comparatively more information associated with any given trade. Likewise, the characteristics of an SRO's membership base may affect the appropriate level of regulatory funding and how the funding is allocated.

Potential varying levels of regulatory funding notwithstanding, all SROs must meet their statutory obligations. The Exchange Act itself, as well as the Commission's rules and automation review policies thereunder, impose on the SROs important regulatory and operational responsibilities, including most of the day-to-day responsibilities for market and broker-dealer oversight.[195] Satisfying these self-regulatory responsibilities requires a substantial expenditure of expertise and funds. The SROs' combined total operating expenses in 1998 were $1.68 billion [196] and total combined SRO operating expenses in 2003 were $2.4 billion.[197] As stated above, a significant benefit of self-regulation in the securities industry is that this significant cost is largely self-funded.

The Commission's supervision of the adequacy of SRO regulatory funding presents considerable challenges. Given the inherent tension between an SRO's role as a business and as a regulator, there undoubtedly is a temptation for an SRO to fund the business side of its operations at the expense of regulation. For example, if the ''appropriate'' amount of regulatory spending would seriously impair the financial stability of an SRO, that SRO would likely reduce regulatory spending rather than jeopardize its financial viability. When the Commission examines the underlying reasons for regulatory failings, it is often clear that an SRO has not allocated sufficient resources to its regulatory function. Without such failings, however, it can be difficult for the Commission to determine whether an SRO is insufficiently funding its regulatory function or simply administering an efficient regulatory program.[198]

If the Commission's SRO Governance and Transparency Proposal is adopted, however, it could illuminate more clearly SRO practices with respect to regulatory spending levels and allocations. Specifically, the detailed accounting of SRO revenues and expenses proposed could enable the Commission to more accurately and efficiently compare these items. Under the current reporting regime, SROs update their Form 1 annually, including an updated financial statement, but their financial information is not necessarily submitted in a comparable format.[199] Thus, the Commission could use this new information to assist in its effort to detect when an SRO is becoming an industry outlier in terms of relative regulatory spending levels. If the Commission made such a determination, it has the ability to pursue a range of regulatory responses, including designating that SRO for heightened Commission oversight or stronger action, such as SRO deregistration.

Although not proposed in the SRO Governance and Transparency Proposal, the Commission could also consider developing formal or informal regulatory spending guidelines for SROs. Establishing uniform guidelines for SROs generally would be a very complex task, however, given the diversity of their marketplaces and memberships and the evolving nature of regulatory oversight. While the SRO Governance and Transparency Proposal would likely result in a heightened Commission ability to detect low regulatory spending levels, it is important to note that gauging the effectiveness of an SRO's self-regulation cannot necessarily be accurately judged by considering capital expenditures in isolation.

The Commission specifically seeks public comment on the following questions related to SRO funding generally:

Question 17: Should the Commission prescribe specific regulatory funding and allocation levels for SROs and, if so, how? Also, how would these levels be determined?

Question 18: Could enhanced transparency of SRO funding be used effectively to promote adequate SRO regulatory funding levels or would other steps be more effective in that regard? What measures could be used to promote adequate SRO regulatory funding levels?

2. SRO Funding Sources

To provide commenters a basis for considering SRO funding, this section discusses the five primary sources of SRO funding: (a) Regulatory fees; (b) transaction fees; (c) listing fees; (d) market data fees; and (e) other miscellaneous fees. While each source of SRO revenue is important, this discussion will provide an extensive discussion of market data and specifically the level of fees charged for market data.

a. Regulatory Fees

SROs charge members fees for joining and maintaining membership. In addition, SROs charge regulatory fees to members that typically take the form of per member or per transaction fees and are generally allocated to funding self-regulatory operations. SROs also contract with other SROs to provide regulatory services. In 1998, regulatory fees accounted for approximately 19%

[194] *See* generally Exchange Act Section 11A, 15 U.S.C. 78k–1.

[195] *See generally* Policy Statement: Automated Systems of Self-Regulatory Organizations, Exchange Act Release No. 27445 (November 16, 1989), 54 FR 48703 (November 24, 1989); Policy Statement: Automated Systems of Self-Regulatory Organizations (II), Exchange Act Release No. 29185 (May 9, 1991), 56 FR 22490 (May 15, 1991).

[196] *See* Concept Release, Regulation of Market information Fees and Revenues (''Market Data Concept Release''), Exchange Act Release No. 42208 (File No. S7–28–99) (December 9, 1999), 64 FR 70613, 70615 (December 17, 1999).

[197] Data compiled from SRO 2003 Annual Reports.

[198] Even if the Commission were to determine that an SRO was insufficiently funding regulation, it would then have the difficult task of deciding whether to take extreme action (such as deregistration of an SRO) or more measured action (such as the NASD's 21(a) Undertaking requiring that it commit $100 million on self-regulatory enhancements). See *e.g.*, 21(a) Report requiring that the NASD expend $100 million over a five year period, to enhance its systems for market surveillance, including the development and implementation of an enhanced audit trail, and to increase its staffing in the areas of examination, surveillance, enforcement, and internal audit; see also NYSE settlement in connection with Exchange Act section 11(a), 15 U.S.C. 78k(a), violations requiring establishment of OTS, Exchange Act Release No. 41574 (June 29, 1999), Administrative Proceeding File No. 3–9925; *see also* Options Settlement requiring establishment of COATS.

[199] *See* Exchange Act Rule 6a–2, 17 CFR 240.6a–2, and 15Aj–1, 17 CFR 240.15Aj–1.

of SRO revenue,[200] while, in 2003, approximately 23% of SRO revenue was derived from such fees.[201]

A recent development with respect to SRO regulatory fees was the NASD's establishment of a Trading Activity Fee (''TAF''), to supplement the regulatory fees it historically charged its members.[202] The TAF assessed a transaction-based fee that was not linked to trading activity reported through Nasdaq systems.[203] In approving the TAF, the Commission found that it was reasonably designed to recover the NASD's costs related to regulation and oversight of its members.[204] A principal factor in the Commission's approval was its explicit recognition of the NASD's broad responsibilities with respect to its members' activities, irrespective of where securities transactions take place.[205] Specifically, the Commission noted that, as a national securities association, the NASD has the responsibility to oversee its members' finances and conduct toward their customers, except in limited circumstances where this responsibility is allocated to another SRO.[206] The Commission further stated that the NASD's responsibility exists even if the conduct involves a transaction executed on a market not directly regulated by the NASD because it has direct responsibility to oversee the firm's dealing with the public in effecting the transactions and may also have responsibility to oversee the impact of the trading on the firm's financial condition.[207]

The Commission specifically seeks public comment on the following question related to SRO regulatory fees:

Question 19: Under current SRO cost structures, SRO funding for regulatory operations is not derived strictly from revenue associated with regulatory fees and operations. Instead, SROs cross subsidize the cost of regulatory operations with revenue that is not strictly derived from regulatory fees and operations. Should the Commission require that SRO funding for regulatory operations be derived only from regulatory fees, rather than allowing the cost of regulatory operations to be subsidized by other revenue sources? If regulatory funding should be limited strictly to revenue generated by regulatory fees, how should the Commission address a situation in which an SRO does not generate sufficient regulatory revenue to fully fund regulatory operations?

b. Transaction Fees

Another important source of revenue for SROs that operate markets is derived from fees that are associated with members' or others' use of the SRO's systems, such as order routing systems, trade execution systems, and electronic connectivity services. These fees are paid by any user of an SRO's market facilities for services, including executing, reporting, and clearing transactions. In 1998, transaction fees accounted for approximately 30% of SRO revenue,[208] while, in 2003, approximately 27% of SRO revenue was associated with transaction fees.[209]

The intense intermarket competition for order flow has put substantial pressure on these fees. For example, greater competition among options markets has caused transaction fees to all but disappear in the options markets.[210] The equity markets have also come under intense competitive pressure to lower transaction fees. As discussed in the Reg NMS proposal, transaction fees have decreased steadily

[200] Market Data Concept Release at 70625.

[201] Data compiled from SRO 2003 Annual Reports. Note that the NYSE 1998 Consolidated Statement of Revenue did not account for ''Data Processing Fee'' revenue. Due to an intervening change in accounting procedures, the NYSE 2003 Consolidated Statement of Revenue includes this item. To provide a more accurate comparison between the 1998 and 2003 percentages, ''Data Fee Processing'' revenue was not included in total SRO revenue for the purpose of calculating the percentage of total SRO revenue represented by regulatory fee revenue. Based on SRO 2003 Annual Report Consolidated Statements of Income certain items were allocated to regulatory fees with respect to the NYSE (''Regulatory Fees'' and ''Annual Membership Fees''), the BSE (''Members'' Dues and Fees''), the Phlx (''Regulatory Fees''), the NASD (including Amex and Nasdaq consolidated statements of income) (''Regulatory Fees,'' ''Registration Fees,'' ''Qualification Fees,'' ''Corporate Financing Fees,'' and ''Fines''), the PCX (''Regulatory and Registration Fees,'' ''Archipelago Revenue: Regulatory Oversight,'' and ''Member and Participant Dues''), the CHX (''Member Services and Fees'' and ''Member Dues''), the CBOE (''Regulatory Fees'' and ''Other Member Fees''), and the NSX (''Regulatory Fees'').

[202] *See* Exchange Act Release Nos. 46817 (November 12, 2002), 67 FR 69784 (November 19, 2002) (''TAF Proposing Release''); 47946 (May 30, 2003), 68 FR 34021 (June 6, 2003) (''TAF Approval Order''). *See also* Exchange Act Release Nos. 49114 (January 22, 2004), 69 FR 4194 (January 28, 2004) (proposing to amend the TAF and extend it to Trade Reporting and Compliance Engine (''TRACE'')-eligible and municipal securities); 50485 (October 1, 2004), 69 FR 60445 (October 8, 2004)(approving proposal to amend the TAF and extend it to TRACE-eligible and municipal securities).

[203] In its filing, the NASD noted its belief that assessing the regulatory fees only for Nasdaq transactions was no longer appropriate for three reasons. First, on a corporate entity level, Nasdaq was separating itself from the NASD and attempting to register as a national securities exchange. Second, the NASD believed that the historic regulatory fee structure was out of step with recent changes in the markets, such as the drastic growth in trading volumes, reductions in average trade size, decimalization, and trading no longer remaining exclusive to the listing market. Finally, the regulatory fee was only assessed against Nasdaq-listed and other transactions that are reported through Nasdaq's trade reporting system, although these fees were used to support member regulatory activities across all markets. *See* TAF Proposing Release at 69785.

The Commission received a total of 23 comment letters on the proposal, all of which objected to the proposal, either for substantive or procedural reasons. Commenters of the TAF proposal argued that the NASD should not charge members for services related to transactions on other markets, where the NASD does not provide the relevant service. In addition, commenters argued that the TAF proposal was anti-competitive in that it indirectly subsidized Nasdaq by effectively reducing the cost of regulatory services the NASD provides to Nasdaq. They also posited that the TAF could establish a dangerous precedent under which fees could be charged by SROs for trading activity that had little or no nexus to that SRO's market. See TAF Approval Order at 34022–34023.

In response, the NASD clarified that the TAF was to be used only to fund its member regulatory activities in a variety of areas such as sales practices, examinations, financial and operational reviews, new member applications, and enforcement wherever such member activity occurs. In addition, the NASD argued that it regulates the activities of its members in all securities, not simply Nasdaq securities. The specific revenues from the TAF, the NASD stated, would not fund regulatory activities of the Nasdaq stock Market and, thus, not create an inappropriate regulatory subsidy. Finally, with regard to comments that no clear nexus existed between the TAF and the corresponding NASD regulatory responsibilities, the NASD maintained that its mandate is broad, and that its regulatory obligations ''exist separate and apart from any market-specific rules and obligations.'' See TAF Approval Order at 34023.

[204] TAF Approval Order at 34023–34024.

[205] *Id.*

[206] *Id.*

[207] The Commission also stated its belief that the TAF approval was not a harbinger for the imposition of fees on transactions executed on markets for which an SRO either has little or no nexus to regulatory tasks performed by the SRO or for which the SRO has no business interest. Most SROs, the Commission concluded, do not have the broad aegis of the NASD regarding members' customer business, and so will not have a regulatory nexus to support a transaction fee applicable to other markets. *See* TAF Approval Order at 34023–34024.

[208] Market Data Concept Release at 70625.

[209] Data compiled from SRO 2003 Annual Reports. Note that the NYSE 1998 Consolidated Statement of Revenue did not account for ''Data Processing Fee'' revenue. Due to an intervening change in accounting procedures, the NYSE 2003 Consolidated Statement of Revenue includes this item. To provide a more accurate comparison between the 1998 and 2003 percentages, ''Data Fee Processing'' revenue was not included in total SRO revenue for the purpose of calculating the percentage of total SRO revenue represented by transaction fee revenue. Based on SRO 2003 Annual Report Consolidated Statements of Income certain items were allocated to transaction fees with respect to the NYSE (''Transaction Fees''), the BSE (''Transaction Fees''), the Phlx (''Transaction Fees''), the NASD (including Amex and Nasdaq consolidated statements of income) (''Transaction Fees''), the PCX (''Transaction Fees and Data Service Charges''), the CHX (''Transaction Fees''), the CBOE (''Transaction Fees''), and the NSX (''Transaction Fees'').

[210] *See generally* Concept Release: Competitive Developments in the Options Markets. Exchange Act Release No. 49175 (February 3, 2004), 69 FR 6124, 6125 (February 9, 2004) (''Options Concept Release'').

in recent years.[211] In addition, most ECNs and Nasdaq are paying a per-share rebate for limit orders that become executed against incoming orders, thereby further reducing net transaction fees.[212] Thus, not only are SRO transaction fees being driven lower, but competition is compelling certain SROs to rebate a significant percentage of transaction fees collected to market participants.

The Commission specifically seeks public comment on the following questions related to SRO transaction fees:

Question 20: SRO transaction fees have been driven sharply lower in recent years by competition. In light of that, why has the overall percentage of SRO revenue associated with transaction fees not dropped as dramatically since 1998 (approximately 27% in 2003 compared to approximately 30% in 1998)?

Question 21: How has the trend of decreasing transaction fees impacted the SROs' ability to fulfill their statutory obligations?

c. Listing Fees

Another important source of revenue for some SROs is listing fees, which are paid by issuers that list their securities on an SRO's market. Initial listing fees are paid at the time of listing and are typically related to the amount of shares being offered. Listing maintenance fees are paid annually and are generally related to the issuers' total shares outstanding in the listed security. In 1998, listing fees accounted for approximately 23% of SRO revenue,[213] while, in 2003, these fees represented approximately 20% of SRO revenue.[214] These revenues have been highly concentrated in the primary listing markets, with secondary markets charging little or no listing fee.[215] This concentration is exemplified by the fact that of the $9,182 billion worth of stocks listed on exchanges in 2002, $9,119 billion was listed on the New York Stock Exchange.[216]

The Commission specifically seeks public comment on the following question related to SRO listing fees:

Question 22: To what extent has increased inter-market competition impacted SRO listing fee revenue? To what extent has this impacted the SROs' ability to fulfill their regulatory obligations?

d. Market Data Fees

Market data revenue has traditionally been a very important component of SRO funding.[217] In 1998, market data revenue represented approximately 21% of SROs' total revenues,[218] while, in 2003, approximately 18% of SRO revenue flowed from market data.[219] Market data revenues represented 16% of NYSE revenues and 24% of Nasdaq revenues in 2003.[220] For one SRO, market data fees accounted for more than 80% of its total 2003 revenue.[221]

In contrast to the importance of market data revenue to overall SRO funding, it is worth noting that it represents a relatively small portion of the securities industry's total expenses. For example, in 1998, the total SRO market data revenue of $410.6 million represented a very small portion of the securities industry's total expenses for the year—less than 1/4th of one percent.[222] In spite of revenue derived from market data playing an important role in SRO funding, some SROs rebate substantial market data revenues to the market participants that contribute to creating the market data.[223]

The U.S. equity markets are not alone in their reliance on market data revenues as a source of funding. All of the other major world equity markets currently derive large amounts of revenues from selling market information, despite having significantly less trading volume and less market capitalization than the NYSE and Nasdaq. To illustrate, the following table sets forth the respective market information revenues, dollar value of trading, and market

[211] *See* supra note 62.

[212] Most ECNs and Nasdaq pay a per-share rebate for limit orders that become executed against incoming orders. This rebate rewards market participants for submitting ''resting'' limit orders that give depth to the trading book. The ECNs and Nasdaq also impose a per-share access fee on the incoming marketable orders that execute against the resting limit orders and thereby ''remove liquidity'' from the book. In this way, the ECNs and Nasdaq use access fee rebates as payment to attract liquidity to their limit order books. Because non-subscribers cannot place limit orders on an ECN's book and therefore cannot receive the rebates, the fees that they pay act as a subsidy to the subscribers that place standing limit orders on the ECN's book. *See* Reg NMS at 11157.

[213] Market Data Concept Release at 70625.

[214] Data compiled from SRO 2003 Annual Reports. Note that the NYSE 1998 Consolidated Statement of Revenue did not account for ''Data Processing Fee'' revenue. Due to an intervening change in accounting procedures, the NYSE 2003 Consolidated Statement of Revenue includes this item. To provide a more accurate comparison between the 1998 and 2003 percentages, ''Data Fee Processing'' revenue was not included in total SRO revenue for the purpose of calculating the percentage of total SRO revenue represented by listing fee revenue. Based on SRO 2003 Annual Report Consolidated Statements of Income certain items were allocated to listing fees with respect to the NYSE (''Listing Fees''), the BSE (''Listing Fees''), the NASD (including Amex and Nasdaq consolidated statements of income) (''Issuer Services''), and the CHX (''Listing Fees'').

[215] The recent increase in intermarket competition for equity listings has raised issues related to listing fees and SRO funding. In early 2004, for example, the Nasdaq Stock Market launched a dual listing program to attract NYSE-listed issuers and offered a one year waiver of all entry fees and annual fees for NYSE-listed companies that became dually listed. Craig Karmin, *Nasdaq Recruits Six NYSE Firms to Dual Listings,* Wall Street Journal, January 13, 2004, at C1.

[216] *See* Commission, 2003 Annual Report, 140 (2004).

[217] As noted above, while the level of fees charged by the SROs for market data was not directly addressed in Reg NMS, broad industry interest in the issue was apparent from the comments received by the Commission in response to Reg NMS. Thus, while each source of SRO revenue is important, this discussion examines market data extensively and specifically examines the level of fees charged for market data. Various commenters in response to Reg NMS stated that market data revenues are an important source of funding for SROs and should therefore not be capped or reduced. See letter from William J. Brodsky, Chairman and Chief Executive Officer, The Chicago Board Options Exchange, Inc., to Jonathan G. Katz, Secretary, Commission, p. 9 (July 1, 2004) (''Reg NMS CBOE letter''); letter from David A. Herron, Chief Executive Officer, Chicago Stock Exchange, to Jonathan G. Katz, Secretary, Commission, pp.18–19 (June 30, 2004); and letter from David Humphreville, President, The Specialist Association, to Jonathan G. Katz, Secretary, Commission, p. 17 (June 30, 2004). One Reg NMS commenter believed that, in absence of market discipline, the Commission and SROs must ensure that the collection and allocation of revenues to different regulatory functions maximize investor protections at a reasonable cost. *See* letter from Huw Jenkins on behalf of UBS Securities LLC, Managing Director, Head of Equities for the Americas, to Jonathan G. Katz, Secretary, Commission, p. 10 (June 30, 2004) (''Reg NMS UBS letter''). An SRO commenter stated that it is consistent with the purpose and intent of Section 11A of the Exchange Act for a significant portion of the market data revenue to be used by SROs for operations and regulation because such costs are directly related to the quality of the market data disseminated. *See* Reg NMS CBOE letter, p. 9.

[218] Market Data Concept Release at 70625.

[219] Data compiled from SRO 2003 Annual Reports. Note that the NYSE 1998 Consolidated Statement of Revenue did not account for ''Data Processing Fee'' revenue. Due to an intervening change in accounting procedures, the NYSE 2003 Consolidated Statement of Revenue includes this item. To provide a more accurate comparison between the 1998 and 2003 percentages, ''Data Fee Processing'' revenue was not included in total SRO revenue for the purpose of calculating the percentage of total SRO revenue represented by market data fee revenue. Based on SRO 2003 Annual Report Consolidated Statements of Income certain items were allocated to market data fees with respect to the NYSE (''Market Data Fees''), the BSE (''Communications, Net Note B''), the Phlx (''Security Price Data and Floor Charges''), the NASD (including Amex and Nasdaq consolidated statements of income) (''Market Data Fees''), the PCX (''Peripheral Equipment and Market Data Fees''), the CHX (''Market Data Fees''), the CBOE (''OPRA Income''), and the NSX (''Market Data Fees'').

[220] Data compiled from NYSE and NASD 2003 Annual Reports.

[221] *See* NSX, 2003 Annual Report Exhibit I–12 (2004).

[222] *See* Market Data Concept Release Appendix.

[223] *See* Reg NMS at 11179.

capitalization for the largest world equity markets in 2003:[224]

	Data revenues (millions)	Trading volume (trillions)	Market capitalization (trillions)
London	$180	$3.6	$2.5
NYSE	172	9.7	11.3
Nasdaq	147	7.1	2.8
Deutsche Bourse	146	1.3	1.1
Euronext	109	1.9	2.1
Tokyo	60	2.1	3.0

Understanding market data pricing and the role that market data plays with respect to SRO funding is an important part of this discussion. Congress recognized that SROs would charge for market data when it gave the Commission authority in the 1975 Amendments to determine the extent to which SRO fees charged for market data are ''fair and reasonable,'' are ''not unreasonably discriminatory,'' and achieve ''equitable allocation'' of reasonable fees among persons who use an SRO's facilities.[225] Market information revenues serve an important and unique role in that they provide a broad source of SRO funding. The fees are paid by all users of market information, including, for example options and futures markets participants that otherwise would not contribute (through transactions services fees or listing fees) to the funding of the particular markets on whose information they rely. [226]

In addition to being important to SROs, market data is also critical to market participants and investors. Market data is essential to investors and other market participants not physically present in a trading market, enabling them to make informed decisions when to buy and sell. It provides the basis for investment and portfolio decisions. And it creates confidence in the fairness and reliability of the markets. The current market data systems for equities and options collect quotes and trades from many different market centers and disseminate them to the public in a single stream of information for each security. This market information has been an essential element in the success of the U.S. securities markets. In addition to providing transparency of buying and selling interest, consolidated data is the principal tool for addressing fragmentation of trading among many different market centers, and for facilitating the best execution of investor orders by their brokers.[227] Market data fees can have a major impact on the effectiveness of the market data system. The level of these fees and their structure determines the extent that market data is available to different types of market participants and investors. And market data can have anticompetitive effects if it is sold on discriminatory terms or in an unfair fashion.[228]

Market data fees also support the timeliness, accuracy, and reliability of the market data being disseminated. Market data, whether consolidated or not, that is untimely or untrustworthy could harm investors and reduce confidence in the fairness of the U.S. securities markets. One of the Commission's most important market structure responsibilities is to assure the integrity of market data.[229] Today, market data from all equity and options markets is highly reliable and widely used. In order to promote the wide public availability of this information, market data fees must be fair and reasonable.[230] Consistent with this is the notion that such fees should at least generate sufficient revenue to provide adequate funding for the dissemination of market data.

Currently, the Commission typically reviews market data fees in the context of proposed fee changes filed by the three networks that disseminate market data in NMS stocks. These fee filings are published for notice and comment before Commission action.[231] After

[224] Table data is derived from the 2003 annual reports of the various markets and from statistics compiled by the World Federation of Exchanges.

[225] *See* Exchange Act Sections 6(b), 11A(c), and 15A(b), 15 U.S.C. 78f(b), 78k–1(c), and 78o–3. Two provisions of the Exchange Act directly address market data fees. Section 11A(c)(1)(C) grants rulemaking authority to the Commission to assure that all securities information processors may obtain market information from an exclusive processor of that information (*i.e.*, the processors for the three Networks) on terms that are fair and reasonable. Section 11A(c)(1)(D) also grants rulemaking authority to the Commission to assure that all persons may obtain market information on terms that are not unreasonably discriminatory. The Commission applies these standards in reviewing fee filings submitted by exclusive processors for the three consolidated networks that disseminate market data in NMS stocks. The three Networks are (1) Network A, which disseminates data in stocks listed on the NYSE; (2) Network B, which disseminates data in stocks listed on Amex and the regional exchanges; and (3) Network C, which disseminates data in stocks listed on Nasdaq. The Commission also applies these standards in reviewing market data filings submitted by individual SROs.

[226] *See* Market Data Concept Release at 70628.

[227] Reg NMS at p.11176.

[228] In the past, SROs have attempted to distribute market data in ways that could potentially harm competitors. For example, in proposing a new ''depth of book'' market data product, Liquidity Quote, the NYSE asserted that it would incorporate a downstream data consolidation restriction clause into its agreements with market data vendors for the product that would prohibit its being integrated with any other market data product. A variety of anti-competition arguments were raised in connection with this proposal and, ultimately, the Commission approved the proposal, but made the approval expressly contingent upon the NYSE not applying the downstream restrictions that were in its vendor agreements at the time of the approval. *See generally* Exchange Act Release Nos. 47091 (December 23, 2002), 68 FR 133 (January 1, 2003); 47614 (April 2, 2003), 68 FR 17140 (April 8, 2003).

[229] When Congress mandated the creation of a national market system, it stated that ''communication systems, particularly those designed to provide automated dissemination of last sale and quotation information with respect to securities, will form the heart of the national market system.'' H.R. Rep. No. 94–229, 94th Cong., 1st Sess. 93 (1975). While Congress did not specifically mandate the creation of a consolidated market data processor system, the Commission has recently emphasized the benefits of consolidated market data, particularly for retail investors. *See* Reg NMS at 11177.

[230] *See* Exchange Act Section 11A(c)(1)(C). 15 U.S.C. 78k–1(c)(1)(C).

[231] Several Reg NMS commenters believed that the existing notice and comment process for effecting market data fee changes does not facilitate informed and meaningful public and industry participation and comment. *See* letter from Gary Cohn, Managing Director, Goldman, Sachs & Co., to Jonathan G. Katz, Secretary, Commission, p. 12 (July 19, 2004) (''Reg NMS Goldman letter''); letter from Carrie E. Dwyer, Charles Schwab & Co., Inc., to Jonathan G. Katz, Secretary, Commission, p. 9 (June 30, 2004) (''Reg NMS Schwab letter''); letter from Marc Lackritz, President, Securities Industry Association, to Jonathan G. Katz, Secretary, Commission, pp. 24 and 26 (June 30, 2004) (''Reg NMS SIA letter''); and letter from Mary McDermott-Holland, Chairman, John C. Giesea, President/CEO,

Continued

these filings are published, the Commission determines whether the fees are fair and reasonable, not unreasonably discriminatory, and otherwise consistent with the requirements of the Exchange Act.[232] Although most market data fee filings currently involve Network fees, the same standard applies and the same questions arise with regard to the market data fees of an individual SRO.

In reviewing a market data fee filing, the Commission has relied to a great extent on the ability of the Networks to negotiate fees that are acceptable to SRO members, information vendors, investors, and other interested parties. The negotiation process is buttressed by the public notice and comment procedures that accompany the Commission's consideration of proposed rule changes.

As equities and options markets have evolved in recent years, strains began to develop in the arrangements for market data, particularly with respect to setting fees. In evaluating the issues raised, an extensive public record has been developed on the subject of market data fees in the last five years. In 1999, the Commission initiated a full-scale review of market data fees and revenues in the Market Data Concept Release. The review was prompted, in part, by the Commission's concern that retail investors might be paying too much for market data.[233] The Market Data Concept Release included the role of revenues derived from such fees in funding the operation and regulation of markets.[234] The Market Data Concept Release presented for public review a great deal of factual information on market data fees and revenues.[235] In the course of that effort, the Commission emphasized that market data must be affordable for retail investors.[236] At about the same time, the Networks filed proposed rule changes that reduced retail investor fees generally by 75% to 80%. The following table sets forth retail investor fees for NYSE and Nasdaq stocks in 2003 and in 1998:

	NYSE			Nasdaq
	2003	1998	2003	1998
Per Query	¼¢ to ¾¢	1¢	½¢	1¢
Monthly	$0.50 to $1.00	$5.25	$1.00	$4.00

The per-query fees are charged each time that a retail investor requests quote and trade information in a particular stock. The monthly fees represent limits on the total amount that a retail investor can be charged for market data in any month. Thus, for example, all retail investors currently have access to an unlimited quantity of the millions of best quotes and trades in Network A stocks during each trading day for no more than $1 per month, compared to the $5.25 that was charged before the Commission's review of market data fees.[237]

The Security Traders Association, to Jonathan G. Katz, Secretary, Commission, p. 15 (June 30, 2004) (''Reg NMS STANY letter''). A few of these commenters also believed that these procedures, which provide that market data fee changes are effective upon filing, gives excessive power to self-interested parties. *See* Reg NMS Schwab letter, p. 9; Reg NMS SIA letter, p. 26; and Reg NMS STANY letter, p. 15. The SIA also stated that ''[t]he fact that the Commission may abrogate the proposal and require refiling does not equate to a substantive review or challenge to the fees charged, and has not proved such in the past.'' *See* Reg NMS SIA letter, p. 26. The SIA and STANY also suggested that this is responsible, in part, for excessive market data fees. *See* Reg NMS SIA letter, pp. 3 and 26–27; STANY letter, p. 15. Schwab recommended amending Commission rules and the joint-SRO plans to eliminate the ''effective upon filing'' process for market data fee changes, including changes that would impact the treatment of market data users and market data distribution policies. *See* Reg NMS Schwab letter, p. 9. Schwab also recommended that the Commission require the joint-SRO plans to file material policy changes as rule changes that require public notice and comment prior to adoption. See Reg NMS Schwab letter, p. 9. Although fees charged by SROs to members generally are effective on filing, market data fees charged to the public are published for notice and comment before approval. See Exchange Act Rule 19b-4, 17 CFR 240.19b-4.

[232] *See* Exchange Act Section 11A, 15 U.S.C. 78k–1; Exchange Act Rule 11Aa3–2, 17 CFR 240.11Aa3–2.

[233] The Internet had greatly expanded the opportunity for retail investors to obtain access to real-time market data through on-line accounts with their broker-dealers, and investor demand for this data had grown exponentially. For example, the Market Data Concept Release noted that the revenues derived from fees applicable to retail investors had grown from $3.7 million in 1994 to $38.9 million in 1998, and represented approximately 9% of total market data revenues. Market Data Concept Release at 70614 and 70631.

[234] *See generally Id.* at Section IV.

[235] The Appendix, for example, included 16 tables setting forth all of the different subscriber fees of the Networks, the revenues, expenses, and distributions of the Networks, and the revenues and expenses of each of the individual SROs that are participants in the Networks. In addition, the Market Data Concept Release included information to help the public assess whether the level of market data fees remained fair and reasonable. For example, the release noted that even prior to creation of the national market system and the Networks, market data revenues were an important source of SRO funding—market data revenues represented 14.7% of the NYSE's total revenues in 1975, compared to 15.3% in 1998. Market Data Concept Release at 70621. As noted above, market data revenues represented 16.0% of NYSE revenues in 2003. In addition, although the total amount of market data revenues had grown substantially in recent years, the increase was proportional to the increase in other SRO revenues. In 1994, market information revenues amounted to $246.1 million and represented 20% of SRO funding. In 1998, such revenues amounted to $410.6 million and represented 21% of SRO funding. The Commission noted that ''the growth in market information revenues has simply kept pace with the growth of other SRO revenues during the prolonged expansion in trading volume of the last five years. The SROs are no more, but also no less, dependent on market information revenues today than they were in 1994.'' Market Data Concept Release at 70615. Moreover, the percentage growth in market data revenues from 1994 to 1998 was 67%, but had not kept pace with the percentage growth in the securities industry's total revenues during this major expansion of trading, which was 139%. *Id.* at 70626.

[236] The Commission noted that one of the most important functions of the Commission is to assist retail investors in accessing the information they need to protect and further their own interests. Moreover, the Commission stated that communications technology had progressed so that broad access to real-time market information should be an affordable option for most retail investors. This information, the Commission believed, could greatly expand the ability of retail investors to trade securities. The Commission stated its intention that to assure that market information fees applicable to retail investors do not restrict their access to market information and that such fees must be non-discriminatory when compared with the fees charged to professional users of market information. Market Data Concept Release at 70614.

[237] *See* Network C / NASD–2003–132, Securities Exchange Act Release No. 48386 (August 21, 2003), 68 FR 51618 (August 27, 2003) (extending pilot program for reduced non-professional NQDS user fee); Network C / NASD–2002–117, Securities Exchange Act Release No. 46446 (August 30, 2002), 67 FR 57260 (September 9, 2002) (extending pilot program for reduced non-professional NQDS user fee); Network C / NASD–2001–56, Securities Exchange Act Release No. 44788 (September 13, 2001), 66 FR 48303 (September 19, 2001) (extending pilot program allowing for reduced non-professional NQDS user fee); Network C / NASD–2001–32, Securities Exchange Act Release No. 44363 (May 29, 2001), 66 FR 30254 (June 5, 2001) (permanently approving reduced Level 1 Service fees for non-professional users on a monthly and per query basis); Network B / CTA–01–01, Securities Exchange Act Release No. 44047 (March 7, 2001), 66 FR 15151 (March 15, 2001) (reducing the initial ticker charge at each customer location from $21.50 to $13.50 and thereby creating a uniform charge for each location); Network C / NASD–00–47, Securities Exchange Act Release No. 43190 (August 22, 2000), 65 FR 52460 (August 29, 2000) (establishing pilot program for reduced non-professional NQDS user fee); Network C / NASD–00–19, Securities Exchange Act Release No. 42715 (April 24, 2000), 65 FR 25411 (May 1, 2000)

In reviewing the basis for evaluating market data fees, the Market Data Concept Release laid out in detail a ''flexible cost-based approach'' to market data fees.[238] The Commission noted that terms such as ''fair'' and ''reasonable'' generally need standards to guide their application in practice, and that one such standard often used to evaluate fees is the amount of costs incurred to provide a service.[239] The Commission stated that an inflexible cost-based standard, although unavoidable in some contexts, can entail severe practical difficulties.[240] Instead, Congress, consistent with its approach to the National Market System in general, granted the Commission some flexibility in evaluating the fairness and reasonableness of market information fees.[241] Specifically, Congress articulated general findings and objectives for the National Market System in section 11A and directed the Commission to act accordingly in overseeing its development.[242] Congress thereby allowed the Commission to adopt a more flexible approach than ratemaking.[243]

To illustrate the practical difficulties of a strict, cost-of-service ratemaking approach, the Market Data Concept Release described one prior instance in which the Commission had sought to implement such an approach in 1984.[244] In that instance, Instinet had brought a proceeding before the Commission asserting that the NASD's fee for full quotation information from all Nasdaq market participants was an unwarranted denial of access to the information.[245] The Commission found in favor of Instinet, primarily because the NASD had failed to submit an adequate cost-based justification for the fee.[246] The Instinet Order emphasized, however, that the scope of its decision was limited to the particular competitive context presented in the proceedings and did not apply to all market data fees.[247]

While recognizing the practical difficulties of a detailed cost-of-service approach, the Commission nevertheless concluded in the Market Data Concept Release that ''the total amount of market information revenues should remain reasonably related to the cost of market information.''[248] In this regard, one of the issues on which comment particularly was requested was whether the Commission should adopt ''a conceptual approach to evaluating the fairness and reasonableness of fees that, among other things, could establish a link between the cost of market information and the total amount of market information revenues.''[249] Critical to this concept was the determination of what SRO costs should be included in the cost of market data.

The Market Data Concept Release's flexible, cost-based approach was intended to arrive at an approach to market data fees that could be implemented in a reasonably efficient manner, as opposed to a full-fledged ratemaking approach. The first step in fashioning the approach was to identify the categories of SRO costs incurred to generate and disseminate market data. All direct market data costs, such as market data recordation, communication, consolidation, and dissemination, would be included. The flexible cost-based approach would also have included in market data costs some portion of ''common costs''—those costs that support multiple SRO functions, in addition to market data, and therefore must be allocated among these services.[250] These common costs comprised the costs of operating the market that produced the market data and the costs of regulating that market so that the data was not inaccurate and not derived from fraudulent or abusive conduct.[251] The Market Data Concept

(extending pilot program for reduced Level 1 Service fees for non-professional users on a monthly and per query basis and further reducing the Level 1 Service monthly fee for non-professionals); Network B / CTA/CQ–99–02, Securities Exchange Act Release No. 42138 (November 15, 1999), 64 FR 63350 (November 19, 1999) (reducing the Network B non-professional subscriber flat service rate, permanently approving and reducing tiered pay-for-use rates for non-professional subscribers, and allowing non-professional subscribers to pay the lower of the pay-for-use or flat rates); Network A / CTA/CQ–99–01, Securities Exchange Act Release No. 41977 (October 5, 1999), 64 FR 55503 (October 13, 1999) (reducing, inter alia, the Network A non-professional subscriber flat service rate, permanently approving and reducing tiered pay-for-use rates for non-professional subscribers, and allowing non-professional subscribers to pay the lower of the pay-for-use or flat rates); Network C / NASD–99–25, Securities Exchange Act Release No. 41499 (June 9, 1999), 64 FR 32910 (June 18, 1999) (establishing pilot program for reduced Level 1 fees for non-professional users on a monthly and per query basis); Network C / NASD–99–17, Securities Exchange Act Release No. 38608 (May 12, 1997), 62 FR 27095 (May 16, 1997) (increasing monthly subscriber fee for Level 1 Service); Network B / Securities Exchange Act Release No. 29879 (October 29, 1991), 56 FR 56430 (November 4, 1991) (increasing Network B professional and non-professional subscriber fees); and Network A / Securities Exchange Act Release No. 29863 (October 25, 1991), 56 FR 56429 (November 4, 1991) (increasing Network A professional and non-professional subscriber fees).

[238] Market Data Concept Release at 70629–70632.

[239] *Id.* at 70619.

[240] *Id.*

[241] *Id.*

[242] *Id.*

[243] *Id.*

[244] *See generally* Securities Exchange Act Release No. 20874 (April 17, 1984), 49 FR 17640 (April 24, 1984) (''Instinet Order'').

[245] *Id.*

[246] *Id.*

[247] *Id.* The Market Data Concept Release then related the long process that ensued to arrive at a cost-based fee:

The practical difficulties of implementing this strict, cost-of-service approach are demonstrated by the subsequent history of the fee involved in the Instinet Order (later named the ''NQDS'' fee). In August 1985, the NASD proposed a revised fee of $79 per month. The Commission did not approve this proposal, but instead instituted proceedings to determine whether it should be disapproved, based primarily on the question whether the fee included some costs that were inconsistent with the Instinet Order. In September 1986, the NASD proposed another NQDS fee of $50.75 per month. This proposal was supported by an extensive and complex ratemaking analysis. It included a comprehensive allocation of costs to pools consisting of six resources and eleven services. The major categories of costs were summarized as (1) operational costs, which were allocated to the six resource pools based on identifiable personnel, equipment, and physical facilities dedicated to those operations, (2) systems and product/service development costs, which were allocated to the six resource cost pools based on the historical or anticipated level of effort to be devoted to the respective resources, (3) overhead and general and administrative costs, which were allocated directly to resource and service cost pools to the extent that a causal relationship existed between those resources or services and the incurrence of the affected costs, and (4) residual overhead and general and administrative costs, which were allocated to resource and service cost pools based on the total cost input base.

The Commission had not acted on this proposal when the NASD, in July 1990, proposed yet another NQDS fee of $50 per month. This fee, however, included last sale information in addition to quotation information. The Commission approved the fee in October 1990. Notably, the Commission did not undertake any cost-based explanation of the $50 fee, nor did it express any opinion on the extensive cost-of-service analysis that had been included in the NASD's September 1986 proposal. Instead, it noted that, ''in reviewing the fairness and reasonableness of the proposal, the Commission finds it significant that the proposed fee of $50 is the result of negotiations among the concerned parties after protracted proceedings.'' The $50 fee approved for NQDS information in 1990 has remained unchanged up to the present.

Market Data Concept Release at 70623 (footnotes omitted).

[248] *Id.* at 70627.

[249] *Id.* 70615.

[250] As the Commission described in the Market Data Concept Release, under the flexible, cost-based approach, the information that the SROs provide to the Networks would not be considered cost-free. Before quotations and transaction reports can be consolidated and made available to the public, an organized market must provide a mechanism for facilitating the buying and selling of securities in a fair and orderly manner. In addition, the SROs must establish, monitor, and enforce trading rules, as well as otherwise regulate their markets to prevent fraudulent and manipulative acts or practices. The SROs incur substantial costs in performing these functions, and they contribute substantially to the value of the information. *Id.* at 70627.

[251] In contrast to costs incurred to operate and regulate markets, the flexible, cost-based approach set forth in the Market Data Concept Release excluded those SRO costs that did not directly contribute to the quality of market data. These included the costs of member regulation (*e.g.*, sales practice and net capital requirements) and those

Continued

Release noted that there is little value to market information that is tainted by fraud, deception, or manipulation.[252] Moreover, the goal of producing high quality market data cannot be achieved by a poorly operated market that is prone to systems outages and delays.[253]

The Market Data Concept Release recognized that not all common costs should be funded by market data, and that any resulting allocation decision would be conceptually difficult.[254] While the Market Data Concept Release's approach to evaluating the fees of the Networks would require aggregating the allocated costs of the contributing SROs, the Market Data Concept Release specifically stated that a distribution of the revenues need not follow the costs of each SRO, but could be based on the quality of the data contributed by the SRO and its contribution to the market data stream.[255] The Market Data Concept Release also questioned whether the rebate of market data revenues demonstrated that the existing fees were too high.[256]

In reflecting on the Market Data Concept Release and the industry's reaction to it, the Commission gained an understanding of the serious divisions in the securities industry over how best to regulate market data. Specifically, there was a sharp division on the fairness and reasonableness of the existing fee levels of market data. In addition, there was a split of opinion as to whether market information fees should provide funding for other SRO functions such as market regulation or should be more closely related to the direct cost of producing the data. Also significant in the comments to the Market Data Concept Release were proposals that more competition be introduced to the compilation and dissemination of market data.[257]

To help resolve these divisions, the Commission established its Advisory Committee on Market Information in the summer of 2000. In its 2001 report, however, the Advisory Committee specifically rejected the flexible cost-based approach.[258] The Advisory Committee report noted the consensus view that it was essentially a ''ratemaking'' approach that was unwise and, ultimately, unworkable.[259] The Advisory Committee recommended retaining price transparency and consolidated market information as core elements of the U.S. securities markets, while adopting a ''competing consolidators'' model of data dissemination.[260] Under this model, vendors and market data users would themselves consolidate the data from the various markets, with each SRO separately providing and setting fees for its own data, rather than consolidating this data through the Networks.

In commenting on proposed Regulation NMS, a number of SROs said the current market data Networks and their fees were reasonable, while several larger markets and their adherents advocated the competing consolidator model. Many other commenters said that the fees they pay to obtain basic market data—NBBO and trades—are excessive, and are not reasonably related to the cost of producing such data.[261] As in earlier debates, some commenters said that market data fees should be limited to covering solely the costs incurred to disseminate consolidated market data, not the costs incurred by the individual SROs to produce the data and provide it to the Networks.[262] Other commenters said that a prerequisite for evaluating the appropriateness of funding SRO operations and regulatory costs from market data revenues was a transparent accounting of the revenues received for market data and the expenses incurred in operating and regulating the SRO's market.[263]

As noted above, to provide greater transparency of SRO revenues and

costs directly associated with other SRO services. Advertising and marketing expenditures were specifically excluded from market data costs.

[252] Market Data Concept Release at 70627.

[253] For example, in times of significant price volatility and spikes in trading volume, it is critically important that the markets remain fair and orderly and that investors continue to have access to a timely stream of market information.

[254] Market Data Concept Release at 70628–70629.

[255] Market Data Concept Release at 70628.

[256] Market Data Concept Release at 70630–70632.

[257] *See generally* Report of the Advisory Committee on Market Information: A Blueprint for Responsible Change (September 14, 2001), Section V (available at *http://www.sec.gov*) (''Advisory Committee Report''). The Advisory Committee Report includes a comprehensive description of the arrangements for disseminating market data to the public, including the terms, fees, and revenues of the Plans.

[258] *See* Advisory Committee Report.

[259] In the view of a majority of the Advisory Committee, ''the 'public utility' cost-based ratemaking approach is generally disfavored today. It is resource-intensive, involves arbitrary judgments on appropriate costs, and creates distortive economic incentives. Accordingly, the Advisory Committee recommends that the Commission not adopt a cost-based approach for determining whether market information fees are consistent with the Exchange Act * * * Furthermore, the Advisory Committee does not recommend any specific changes to the standard under which the Commission reviews market data fees and revenues, or to the manner in which it conducts this review.'' Advisory Committee Report at Section VII.D.3.

[260] Advisory Committee Report at Section V.

[261] Many commenters, mostly securities firms and associations, believed that the Commission failed to address the main underlying problem, which they believe to be the root of the economic and regulatory distortions that the Commission is trying to address—whether the current fees for market data are excessive in relation to the actual cost of collecting and disseminating market data. *See* letter from Daniel M. Clifton, Executive Director, American Shareholders Association, to Jonathan G. Katz, Secretary, Commission, ASA Letter, p. 2 (June 10, 2004) (''Reg NMS ASA letter''); letter from Kim Bang, President and Chief Executive Officer, Bloomberg Tradebook, LLC, to Jonathan G. Katz, Secretary, Commission, pp. 2 and 8–9 (June 30, 2004) (''Reg NMS Bloomberg letter''); letter from C. Thomas Richardson, Citigroup Global Markets, Inc., to Jonathan G. Katz, Secretary, Commission, pp. 4 and 15 (July 20, 2004) (''Reg NMS Citigroup letter''); Reg NMS Goldman Sachs Letter, pp. 2 and 10; letter from Samuel F. Lek, Chief Executive Officer, Lek Securities Corporation, to Jonathan G. Katz, Secretary, Commission, (no page numbers) (May 24, 2004) (''Reg NMS Lek letter''); letter from Thomas N. McManus, Managing Director and Counsel, Morgan Stanley, to Jonathan G. Katz, Secretary, Commission, pp. 3 and 21 (August 19, 2004) (''Reg NMS Morgan Stanley letter''); letter from David Colker, Chief Executive Officer and President, NSX, to Jonathan G. Katz, Secretary, Commission, pp. 6–7 (June 29, 2004) (''Reg NMS NSX letter''); Reg NMS Schwab letter, p. 2; Reg NMS SIA letter, pp. 3 and 22; and Reg NMS STANY letter, p. 14.

A range of commenters believed that the current level of market data fees warranted review. *See* letter from Ellen L. S. Koplow, Executive Vice President and General Counsel, Ameritrade, Inc., to Jonathan G. Katz, Secretary, Commission, Letter, pp. 3 and 10 (June 30, 2004) (''Reg NMS Ameritrade letter''); letter from James J. Angel, Ph.D., CFA, Associate Professor of Finance, McDonough School of Business, to Jonathan G. Katz, Secretary, Commission, Letter I, p. 5 (June 30, 2004)(''Reg NMS Angel letter''); Reg NMS ASA Letter, p. 2; Reg NMS Bloomberg Letter, pp. 2 and 8–9; letter from William O'Brien, Chief Operating Officer, Brut, LLC, to Jonathan G. Katz, Secretary, Commission, pp. 21–23 (July 29, 2004) (''Reg NMS Brut letter''); Reg NMS Citigroup Letter, p. 15; letter from W. Leo McBlain, Chairman, Financial Information Forum, and Thomas J. Jordan, Executive Director, Financial Information Forum, to Jonathan G. Katz, Secretary, Commission, p. 3 (July 9, 2004)(''Reg NMS FIF letter''); letter from Richard M. Whiting, Executive Director and General Counsel, Financial Services Roundtable, to Jonathan G. Katz, Secretary, Commission, pp. 6–7 (June 30, 2004) (''Reg NMS FSR letter''); Reg NMS Goldman Sachs letter, pp. 2 and 10; letter from Ari Burstein, Associate Counsel, Investment Company Institute, to Jonathan G. Katz, Secretary, Commission, pp. 21–22 (June 30, 2004) (''Reg NMS ICI letter''); Reg NMS Lek letter (no page numbers); Reg NMS Morgan Stanley letter, pp. 3 and 21–22; Reg NMS Nasdaq letter, pp. 4 and 24–26; Reg NMS NSX letter, pp. 6–7; Reg NMS Schwab letter, p. 2; Reg NMS SIA letter, pp. 3 and 22; Reg NMS STANY letter, p. 14; and Reg NMS UBS letter, p. 10.

[262] Many commenters believed that market data revenues should not be used to fund regulatory costs of the SROs. *See* Reg NMS Citigroup letter, pp. 15–16; Reg NMS FIF letter, p. 3; Reg NMS Goldman Sachs letter, p. 11; Reg NMS Schwab letter, p. 3; and Reg NMS SIA letter, pp. 3 and 23.

[263] Some Reg NMS commenters believed that market data fees are not transparent enough to allow a proper assessment of the appropriateness of fees charged because SROs' operating costs and use of revenues are not revealed. *See* Reg NMS Ameritrade Letter, pp. 10–11; letter from W. Hardy Callcott, to Jonathan G. Katz, Secretary, Commission, pp. 2–3 (May 6, 2004) (''Callcott letter''); Reg NMS Goldman Sachs letter, p. 11; Reg NMS Schwab letter, p. 7; Reg NMS SIA letter, pp. 22–23 and 25; and Reg NMS STANY letter, pp. 14–15.

expenses, the Commission is proposing in the SRO Governance and Transparency Proposal to require SROs to file with the Commission public reports detailing their sources of revenues and their uses of these revenues, specifically including their costs of regulation.[264] These reports could provide observers greater ability to evaluate the role of market data revenues in financing an SRO, and to compare these revenues to the expenses of operating and regulating their market. This information also could empower users to respond to market data fee changes on a more informed basis.

Thus, given the concerns raised in response to proposed Reg NMS regarding market data fees and because these issues are related to considerations of overall SRO funding and regulatory operations, the Commission is seeking comment on a number of issues.

Question 23: Should market data revenue be used to cross subsidize SRO regulatory operations?

Question 24: Are current market data fees significantly limiting access of market participants, investors, or other users to data? Why are certain market data fees more problematic than others, such as those associated with SRO data products that are not part of the consolidated quote stream? If so, which fees and why?

Question 25: Should the Commission reconsider the flexible, cost-based approach?

Question 26: Should the Commission consider a narrow cost-based approach that takes into account only limited costs, such as consolidation costs?

Question 27: On a conceptual basis, what should be included in the cost of generating market data?

Question 28: Are there other, better cost-based approaches? What are their potential benefits and drawbacks?

Question 29: Should the Commission require a more detailed explanation of how SROs spend the revenue generated from market data fees? Would the requirements proposed in the SRO Governance and Transparency Proposal that SROs detail their sources and uses of revenues add sufficient transparency in this area, or should more detailed reporting be mandated?

Question 30: If the Commission were to implement a revised approach to market data fees that substantially reduced this element of SRO funding, would SROs be able to raise the level of other revenue sources to remain adequately funded to comply with their statutory obligations?

Question 31: What SRO fees or other charges presently are under priced? What SRO fees or charges are over priced? On balance, are SROs over funded or under funded? What would be the impact on smaller SRO members of funding regulatory costs exclusively through regulatory fees?

Question 32: If market data fees were substantially reduced and SROs were unable to replace these revenues from other sources, would SROs be able to adequately fund their regulatory operations? If an SRO's funding were to become insufficient because of such a decline in revenue, should that SRO lose its status as a registered SRO?

Question 33: If market data fees were substantially reduced, would this exacerbate the conflicts inherent in the SRO system—in particular, the incentive to fund business functions at the expense of regulation?

Question 34: To what extent would the enhancements proposed in the SRO Governance and Transparency Proposal mitigate these concerns about inherent conflicts? Are there other measures that could mitigate these conflicts?

Question 35: Should the Commission require that all SRO fees and charges be closely related to the cost of the SRO providing the service in question? What would be the benefits and risks of doing so?

e. Miscellaneous Fees

In addition to regulatory fees, transaction fees, listing fees, and market data fees, SROs receive revenue from a variety of miscellaneous sources as well. For instance, SROs charge fees for administering joint industry plans and market systems.[265] SROs also derive funding from product licensing,[266] investment gains, and fines. In 1998, these types of miscellaneous SRO fees accounted for 8% of SRO revenue,[267] while, in 2003, 12% of SRO revenue was associated with these miscellaneous fees.[268] This relatively significant increase (a 50% increase compared with the 1998 percentage for miscellaneous fees) may have been caused by an increase in certain SRO sources of revenue, such as derivative product licensing fees, and by the intervening establishment of SRO relationships with other markets.[269]

The Commission specifically seeks public comment on the following question related to SRO miscellaneous fees:

Question 36: In light of the recent growth in SRO revenue that is derived from miscellaneous fees, how important are these fees to SRO funding generally and will this growth trend continue? If so, how does this revenue pose conflicts with respect to the SRO regulatory function? How should these conflicts be addressed? How does it relate, if at all, to the SROs' fulfilling their statutory obligations?

V. Alternative Regulatory Approaches

In order to focus consideration of the strengths and weaknesses of the SRO system, the following section discusses a variety of enhancements and alternative approaches, which would require either Commission or Congressional action to achieve. Specifically, this section will examine: (1) Proposed enhancements to the current SRO system; (2) implementing an independent regulatory and market corporate subsidiary model; (3) implementing a hybrid model; (4) implementing a competing hybrid model; (5) implementing a universal industry self-regulator model; (6) implementing a universal non-industry regulator model; and (7) establishing direct Commission regulation of the securities industry. The discussion of each alternative examines how effectively it would manage the current SRO system's inherent limitations.

It is important to note that this discussion does not attempt to provide an exhaustive list of every potential option and alternative approach that

[264] *See supra* note 99.

[265] For example, the NASD operates both the Central Registration Depository (''CRD'') System for registered representative registration and the Investment Advisor Registration Depository (''IARD'') system. In addition, certain SROs earn fees from the administration of the consolidated data networks.

[266] For example, Nasdaq receives licensing fees from regional exchanges that report trades in Nasdaq–100 Index Tracking Stock. Nasdaq, 2003 Annual Report 43 (2004).

[267] Market Data Concept Release at 70625.

[268] Data compiled from SRO 2003 Annual Reports. Note that the NYSE 1998 Consolidated Statement of Revenue did not account for ''Data Processing Fee'' revenue. Due to an intervening change in accounting procedures, the NYSE 2003 Consolidated Statement of Revenue includes this item. To provide a more accurate comparison between the 1998 and 2003 percentages, ''Data Fee Processing'' revenue was not included in total SRO revenue for the purpose of calculating the percentage of total SRO revenue represented by miscellaneous fee revenue. Based on SRO 2003 Annual Report Consolidated Statements of Income certain items were allocated to miscellaneous fees with respect to the NYSE (''Facility and Equipment'' and ''Investment Income''), the BSE (''Interest'' and ''Other''), the Phlx (''Clearing and settlement,'' ''Dividend and Interest,'' and ''Other''), the NASD (including Amex and Nasdaq consolidated statements of income) (''Dispute Resolution Fees'' and ''Other Revenue''), the PCX (''Archipelago Revenue: Original Consideration Amortization,'' ''Communications,'' and ''Other''), the CHX (''Interest'' and ''Other''), and the CBOE (''Interest'' and ''Other'').

[269] *E.g.,* the Amex's affiliation with the NASD and Arca's affiliation with the PCX.

could be considered. The purpose of this section is to provide a discussion of what appear to be some of the more promising alternatives. Public comment sought, however, is not limited to the options and alternative approaches described herein. In addition, while this section attempts to detail the strengths and weaknesses of the various options and alternative approaches, it should be noted that such a discussion is inherently speculative. The full range of strengths and weaknesses of any given option or alternative approach would likely not be known until that approach were fully implemented.

A. Proposed Enhancements to the Current SRO System

The current SRO system has provided essential regulation of markets and members for over seven decades. Nonetheless, this system has inherent limitations that should be considered. This section discusses possible enhancements to the status quo that could be implemented to address these SRO limitations.

1. SRO Governance and Transparency Rulemaking

The Commission today is proposing an SRO Governance and Transparency Proposal.[270] If adopted, the proposed rulemaking would strengthen SRO governance, enhance SRO disclosure and reporting requirements, and address various issues that have arisen with respect to shareholder-owned SROs.[271] The proposed governance standards would require SROs that are national securities exchanges and registered securities associations to have a majority independent board and fully independent Nominations, Governance, Audit, Compensation, and Regulatory Oversight Committees (or their equivalent).[272] SROs also would be required to effectively separate their regulatory function from their market operations and other commercial interests.[273]

With respect to the regulatory function, each SRO would be required to establish standards to assure the independence of its regulatory program. At a minimum, the regulatory function of an SRO would be required to be overseen by a Chief Regulatory Officer who reports to, and is evaluated by, an independent Regulatory Oversight Committee. Moreover, SROs would be required to provide the Commission with specified information concerning their regulatory programs on a regular basis. As part of this proposal, each SRO would be required to prepare for the Commission annual and quarterly regulatory reports that would give details regarding key aspects of the SRO's regulatory program. As part of the annual report, each SRO also would be required to disclose employment arrangements with its Chief Regulatory Officer and other key regulatory personnel. The filing of this regulatory program information is intended to bolster the Commission's SRO inspections program and thus would be kept confidential to the extent permitted by law.

In addition to filing quarterly and annual reports about their regulatory programs, each SRO would be required to disclose publicly information about its regulatory program and provide greater disclosure regarding revenues and expenses and staffing of its regulatory program. Finally, the SRO Governance and Transparency Proposal proposes ownership and voting concentration limits on members that are broker-dealers to mitigate the conflict of interest that would arise if a broker-dealer were to control a significant interest in its regulator or if a member could exercise too much control over the operations of the SRO.

If the proposed SRO Governance and Transparency Proposal is adopted, a number of benefits could be gained. Regulatory conflicts with members, market operations, issuers, and shareholders could be reduced. The strict reporting lines of the Chief Regulatory Officer reporting to an independent board committee could reduce the SRO regulation conflicts. In addition, the wholly independent Regulatory Oversight Committee's sole responsibility for budgeting decisions with respect to regulatory operations could help insulate the budgeting process from business pressures.

While the Governance and Transparency Proposal could help manage a variety of the traditional SRO limitations, it would not eliminate them. For instance, conflicts could persist in spite of the majority independent board because of the influence of representatives of large members serving on the board, particularly if intermarket competition pressures continue to increase. In addition, the fact that the independent directors would necessarily rely on the expertise of the industry directors to some degree could undermine some of the structural protections put in place. Moreover, the independent directors' own imperceptible institutional biases could compromise some of the structural protections.

Concerns regarding unequal regulation and unequal regulatory funding across markets would persist under the SRO Governance and Transparency Proposal. This would be true even if each SRO's Regulatory Oversight Committee were to make regulatory budgeting decisions irrespective of business or other pressures. These committees would not all necessarily allocate regulatory funding in the same fashion in the different SROs; thus, regulatory inequalities could still exist. The concerns regarding conflicting SRO rules, conflicting SRO rule interpretations, conflicting SRO inspection regimes, and redundant regulatory staff and infrastructure across markets would remain under this proposal. Finally, the proposal also does not address potential intermarket trading surveillance issues.

The Commission specifically seeks public comment on the following questions related to the SRO Governance and Transparency Proposal:

Question 37: To what extent would the changes proposed in the SRO Governance and Transparency Proposal effectively manage inherent SRO limitations related to conflicts, funding, redundancies, and intermarket surveillance?

Question 38: To what extent would the changes proposed in the SRO Governance and Transparency Proposal continue to provide the benefits of the current SRO system (*e.g.*, largely self-funded system with market specific expertise of SRO regulatory staff enhancing rule promulgation and enforcement)?

Question 39: If adopted, would the SRO Governance and Transparency Proposal enable the Commission, investors, and market participants to perceive when a particular SRO was insufficiently funding its regulatory function? If so, could this lead the SROs to develop and follow voluntary guidelines or standards with respect to regulatory spending levels?

Question 40: Would the changes proposed in the SRO Governance and Transparency Proposal more effectively manage inherent SRO limitations compared to the NYSE's recent corporate and regulatory function restructuring?[274]

[270] *See* supra note 99.

[271] *Id.*

[272] *Id.*

[273] *Id.*

[274] *See* Exchange Act Release Nos. 48946 (December 17, 2003), 68 FR 74678; 48764 (November 7, 2003), 68 FR 64380 (November 13, 2003) (regarding NYSE governance and regulatory function amendments).

2. Intermarket Surveillance Enhancements

Another incremental improvement to the current system could be the enhancement of the Commission's and the SROs' ability to regulate intermarket trading activity. As discussed at length above, several equity markets have developed individual order audit trails, the options markets have developed COATS to assist in the surveillance of order flow in the options markets, and the ISG has developed a clearing level order audit trail. Full implementation of a more robust intermarket order audit trail for both the options and equity markets could enhance the surveillance of intermarket order flow. It would not by itself, however, manage any of the other inherent SRO limitations, including conflicts, regulatory redundancies, and funding problems. In addition, even with a consolidated order audit trail, the Commission would have to be vigilant in determining whether the SROs used it to enhance surveillance and regulation of intermarket trading.

The Commission specifically seeks public comment on the following questions related to intermarket surveillance enhancements:

Question 41: To what extent would the establishment of a more robust intermarket surveillance regime more effectively manage inherent SRO limitations related to conflicts, funding, redundancies, and intermarket surveillance?

Question 42: To what extent would enhancing intermarket surveillance continue to provide the benefits of the current SRO system (*e.g.*, largely self-funded system with market specific expertise of SRO regulatory staff enhancing rule promulgation and enforcement)?

Question 43: To what extent is COATS serving as an effective tool for enhancing intermarket surveillance?

Question 44: To what extent should COATS be used as a template for the establishment of a consolidated order audit trail for the equity markets?

Question 45: To what extent are SROs effectively using intermarket order audit trail data to enhance surveillance?

Question 46: What are examples of illicit intermarket trading activity that can be engaged in undetected by regulators?

B. Independent Regulatory and Market Corporate Subsidiaries

Another approach would be to increase SRO regulatory independence through mandated SRO internal restructuring. One option would be to require that all SROs create independent subsidiaries for regulatory and market operations. This model could resemble the NASD corporate structure that was devised in the wake of the joint Department of Justice and SEC investigation into OTC market maker pricing collusion that resulted in a Commission enforcement action.[275] Among the most important NASD Undertaking resulting from the settlement was a corporate restructuring of the NASD and the establishment of an independent regulatory corporate subsidiary, NASD Regulation, Inc. (''NASDR'').[276]

Under this model, regulatory staff of each SRO would be placed within an independent regulatory subsidiary, which would report directly to the corporate parent's board. Substantially all regulatory operations would be housed in the regulatory subsidiary, including examination, rulemaking, and enforcement responsibilities. All market operations responsibilities would be placed within an independent market subsidiary.

This model would provide a more clear organizational separation than most SROs currently exhibit. It would help strengthen an independent attitude in the regulatory subsidiary, which could address conflicts with members, market operations, issuers, and shareholders. This approach might establish even more clearly defined divisions between the regulator and the market functions than the proposed SRO Governance and Transparency Proposal. While the SRO Governance and Transparency Proposal relies on corporate reporting lines to insulate the regulator function, this model would house the regulator and market in distinct corporate subsidiaries that would be governed by separate boards.

As with making incremental changes to the current system, however, this model would not alleviate all SRO limitations. A primary purpose of the regulatory subsidiary would be supervising the competitive market subsidiary. Thus, the independent regulatory subsidiary would still be a component of a larger competitive enterprise and subject to business pressure on some level. With respect to regulatory funding, the influence of major members, issuers, and shareholders, and increased intermarket competitive pressure could still have a detrimental impact on the regulatory budgeting process. Even though an independent board committee would be responsible for budgeting decisions, there would still be reliance on major members and the market operation for funding. As with the approaches already described, the self-funding of regulatory operations by each SRO would cause a continued degree of unequal funding and unequal regulation across markets. Moreover, conflicting SRO rules, conflicting SRO rule interpretations, conflicting SRO inspection regimes, redundant SRO regulatory staff and redundant regulatory infrastructures across markets would remain. This approach also could reduce market specific knowledge on the part of regulatory staff by removing it on a corporate level from market operations. In addition, the intermarket trading surveillance issues in the system would persist.

The Commission specifically seeks public comment on the following questions related to the separate market and regulatory subsidiary SRO structure model:

Question 47: To what extent would the implementation of the separate market and regulatory subsidiary SRO structure model effectively manage inherent SRO limitations related to conflicts, funding, redundancies, and intermarket surveillance?

Question 48: To what extent would the separate market and regulatory subsidiary SRO structure model continue to provide the benefits of the current SRO system (*e.g.*, largely self-funded system with market specific expertise of SRO regulatory staff enhancing rule promulgation and enforcement)?

Question 49: To what extent is the separate market and regulatory subsidiary SRO structure model effective in managing inherent SRO limitations specifically with respect to the NASD?

C. Hybrid Model

Another option, which would require significant system restructuring, would be the Commission's designation of a market neutral single self-regulatory organization (''Single Member SRO'') to regulate all SRO members with respect to membership rules, including rules governing members' financial condition, margin practice, handling of customer accounts, registered representative registration, branch office supervision, and sale practices. The Single Member SRO would be solely responsible for promulgating membership rules, inspecting members for compliance with ''member'' rules, and taking enforcement action against those members that fail to comply. Each SRO that operates a market (''Market SRO'')

[275] *See* 21(a) Administrative Order and 21(a) Report.

[276] *See* 21(a) Report at 50–55.

would be solely responsible for its own market operations and market regulation.

This approach would have a variety of sub-options with respect to the Market SROs' role in surveillance of the market and enforcement of ''market'' rules. For instance, the Market SROs could maintain all of the functions that SROs currently carry out with respect to their market operations, including promulgating market rules, conducting market surveillance, and taking enforcement action with respect to violations of market rules. Alternatively, the Market SROs could be responsible for promulgating rules and conducting surveillance, but enforcement actions could be referred to the Single Member SRO. Another option would limit the Market SROs' responsibility to market rule promulgation and the Single Member SRO would be responsible for all other market surveillance and enforcement functions.

As with the approaches already discussed, this Hybrid model could improve upon the current system in a variety of respects. For instance, because the Single Member SRO would not be affiliated with a particular market, inherent conflicts that exist between the regulatory function and market operation of an SRO would be reduced. It would also eliminate duplicative regulation with respect to membership rules. This approach could result in beneficial synergies by the centralization of membership regulation, while maintaining the value of having market regulatory staff embedded within the Market SROs. The Single Member SRO would also potentially serve as a more effective liaison with the SEC, Congress, and international entities on behalf of the industry because it would be a single, market neutral voice. Depending on the extent to which the Single Member SRO was delegated responsibility under this approach for intermarket surveillance, cross-market surveillance could be simplified and enhanced.

As with other models, this approach has limitations. For example, this approach could reduce self-regulatory knowledge of business practices by removing the Single Member SRO from market operations. In addition, this model would raise a ''boundary issue'' between member and market rules, in that every SRO rule would have to be characterized as either a ''member'' or ''market'' rule. Some rules, such as those related to member capital requirements, would likely be categorized as member rules, because they are unrelated to direct trading activity and deal with requirements imposed on members in support of trading operations. In contrast, certain rules, such as those related to the priority of orders on a market's trading floor or system, would clearly be characterized as trading rules. A variety of other rules, however, such as those related to front running or margin requirements, could be categorized as either ''market'' or ''member'' rules because they embody elements of both types of rules.

While this Single Member SRO approach could reduce certain conflicts, it would not resolve the conflicts arising from member funding, and control, and from reliance on industry members for business experience. Also, conflicts would persist unabated in the Market SROs. As noted above, sub-issues with respect to the duties of the Market SROs would have to be determined and the extent of this conflict would depend on the extent of the Market SRO's regulatory responsibility. For instance, the Market SRO's role in market rule promulgation, market surveillance, and market rule enforcement would have to be determined.

The concerns about unequal funding and unequal regulation of members would be substantially reduced. Specifically, unequal funding and unequal regulation with respect to member regulation would be eliminated because only one Single Member SRO would exist. However, other funding issues could arise. Either the Single Member SRO would be required to depend solely on regulatory fees for funding or the Market SROs would have to contribute to the Single Member SRO from listing, market data, and market operation revenues. Determining the absolute and relative amounts of these contributions would raise difficult issues. Specifically, an allocation formula would have to be devised for determining the relative amount that each Market SRO owed annually for funding the Single Member SRO. The formula could be weighted based on a host of complex and potentially subjective factors, including trading volume, average member size, number of members, type of security traded on the market, and type of business (*e.g.*, agency or proprietary) engaged in by the SROs' members. The concern about unequal funding and unequal regulation would also persist with respect to the Market SROs. Although, inconsistent member rules, staff, and infrastructure would be eliminated, inconsistent market rules, staff, and infrastructure would remain.

The Commission specifically seeks public comment on the following questions related to the Hybrid SRO structure model:

Question 50: To what extent would the implementation of the Hybrid model more effectively manage inherent SRO limitations related to conflicts, funding, redundancies, and intermarket surveillance?

Question 51: To what extent would the Hybrid model continue to provide the benefits of the current SRO system (*e.g.*, largely self-funded system with market specific expertise of SRO regulatory staff enhancing rule promulgation and enforcement)?

Question 52: How would the Single Member SRO be funded under the Hybrid approach?

Question 53: To what extent would the boundary issue with respect to ''member'' and ''market'' rules be a concern in implementing the Hybrid approach? Which types of rules would be subject to the ''boundary'' problem (*i.e.*, which types of rules could be categorized either as ''market'' or ''member'' rules)? How should these ''boundary'' issue rules be categorized and why?

Question 54: In establishing itself, should the Single Member SRO draw personnel, facilities, or other assets from the existing SROs? If so, would the Market SROs from which personnel, facilities, or assets were drawn be able to replace those resources? Would there be any conflicts of interest with respect to Single Member SRO personnel allegiance to their former Market SROs?

Question 55: To what extent should the Market SROs or the Single Member SRO under the Hybrid approach be responsible for market rule promulgation, market surveillance, and enforcement of market rules?

D. Competing Hybrid Model

Another approach involving a significant departure from the current system would be a derivative of the Hybrid approach. Under this approach, Market SROs would exist as in the pure Hybrid approach and market regulation would be conducted separately from member regulation. Rather than one Single Member SRO, however, this approach would permit the existence of multiple competing member SROs (''Competing Member SROs''), which would be required to be registered with the Commission and, thereby, authorized to provide member regulatory services. Under this approach, each Market SRO member would also have to be a member of one of the Competing Member SROs. A Competing Member SRO would charge its members a regulatory fee. Because of the potential disparity in bargaining

power between the Competing Member SROs and individual brokerage firms, this regulatory fee would likely need to be subject to appropriate oversight, including Commission approval. The Competing Member SROs would be responsible for promulgating the range of member rules described in the Hybrid discussion, inspecting members for compliance with member rules, and taking enforcement action against those members that fail to comply. Under this approach, as with the pure Hybrid approach, Market SROs would retain their market regulatory responsibilities.

Under this approach, members of Competing Member SROs would have the right to periodically switch Competing Member SROs. A limit on the frequency with which members could switch between Competing Member SROs would likely need to be imposed for a variety of reasons. For instance, members could conceivably avoid being effectively regulated by switching between Competing Member SROs whenever regulatory action loomed. Further, Competing Member SROs may not vigorously regulate important members that are able to switch to another Competing Member SRO, if the members believe they can receive more lenient regulation from a different Competing Member SRO. In addition, longer Competing Member SRO experience with a particular member would likely result in increased institutional knowledge and potentially more effective regulation.

As with the pure Hybrid model, this approach would have a variety of sub-issues to be resolved with respect to the Market SROs' role in promulgating market rules, conducting surveillance of the market, and enforcement of market rules. For instance, the Market SROs could maintain all of the functions that SROs currently carry out with respect to their market operations. Alternatively, the Market SROs could be responsible for promulgating market rules and conducting market surveillance, but enforcement actions could be referred to the Competing Member SRO of the offending Market SRO member. Another option would be the Market SROs being responsible solely for market rule promulgation and the Competing Member SROs being responsible for all other market surveillance and enforcement functions. This approach would also require considering whether Competing Member SROs should be required to have uniform membership rules to ensure uniformity of rules governing the membership of each market and to limit the potential for regulatory arbitrage. In addition, difficult issues would have to be addressed with respect to the criteria for a Commission determination as to whether a Competing Member SRO was ''authorized'' to provide member regulation.

This model carries with it a variety of benefits. For example, as with the pure Hybrid model, if uniform membership rules were required, this approach could significantly reduce conflicts and inconsistent application and enforcement with respect to membership rules. In addition, it would concentrate membership regulatory expertise in a small number of entities, while continuing to foster market specific expertise in the regulatory staff embedded in Market SROs. As with the Hybrid model, the Competing Member SROs could be more effective liaisons with the SEC, Congress, and international entities on behalf of the industry.

This approach would be a compromise between the Single Member SRO approach and the current system of numerous redundant SRO member regulators. Moreover, this approach would not require the potential elimination of one of the existing primary member regulators in favor of another. Depending on the extent to which the Competing Member SROs are delegated responsibility for inter-market surveillance (and if ultimately a limited number of these Competing Member SROs are registered), cross-market surveillance could be simplified and enhanced. Finally, this model might succeed in centralizing member regulation to a much greater extent than under the current system, but at the same time foster competitive discipline by allowing Competing Member SROs to compete with each other.

As with the approaches already discussed, this model has significant drawbacks. For instance, and as discussed above, it would require the same difficult ''boundary issue'' determinations between ''market'' and ''member'' rules to be made as would be made under the Hybrid approach. As with the pure Hybrid approach, this model could reduce self-regulatory experience by separating self-regulatory member staff from market operations. Moreover, conflicts with members, market operations, issuers, and shareholders would remain unabated in the Market SROs.

Competition could result in an effort by the Competing Member SROs to reduce their fees to attract and keep members and the Commission would ultimately continue to be responsible for determining whether funding remained adequate. This model could reduce conflicting member rules, but would only eliminate these conflicting rules if the Competing Member SROs adopted a uniform set of member rules. In addition, conflicting market rules across Market SROs would still exist. Ideally, under this approach, competitive forces would discipline the Competing Member SROs and discourage them from becoming unresponsive.

As noted above, a significant issue with the Competing Member SRO model would be the ability of an SRO to discipline members if the members could then choose another regulator. This could be addressed by limitations on the ability of members to make changes or a charge for switching from one regulator to another, but such barriers might tend to diminish the benefits of competition.

Finally, if the NASD should be one of the Competing Member SROs, its specific role in overseeing the OTC market and its operation of the ADF, in particular, would also require further analysis under this model. While the NASD, as a registered national securities association under Exchange Act Section 15A,[277] is responsible for overseeing OTC broker-dealer activity, many of its rules related to member use of the ADF could be characterized as market rules (*e.g.*, NASD Rule 4300A regarding direct and indirect electronic access to best bids and offers posted in the ADF).

The Commission specifically seeks public comment on the following questions related to the Competing Hybrid SRO structure model:

Question 56: To what extent would the implementation of the Competing Hybrid SRO structure model effectively manage inherent SRO limitations related to conflicts, funding, redundancies, and intermarket surveillance?

Question 57: To what extent would the Competing Hybrid SRO structure model continue to provide the benefits of the current SRO system (*e.g.*, largely self-funded system with market specific expertise of SRO regulatory staff enhancing rule promulgation and enforcement)?

Question 58: What should the criteria be upon which Competing Member SROs would be registered under the Competing Hybrid approach?

Question 59: What would be the ideal number of Competing Member SROs under the Competing Hybrid approach?

Question 60: What limitations, if any, should be placed on members' ability to change Competing Member SROs?

[277] 15 U.S.C. 78k–1.

Question 61: Should the Competing Member SROs be required to adopt a uniform set of member rules?

E. Universal Industry Self-Regulator

Another model, which would require significant restructuring, would be the establishment of a universal industry self-regulator (''Universal Industry Self-Regulator''). Under this model, one industry self-regulatory organization would be responsible for all market and member rules for all members and all markets. The current SROs' self-regulatory authority would be transferred to the Universal Industry Self-Regulator, including member and market rulemaking, member and market surveillance, and member and market rule enforcement. This approach likely would require legislation or significant restructuring of the current SROs.[278] Under this approach, all member firms would be registered directly with the Universal Industry Self-Regulator and all markets would be non-SROs registered with the Universal Industry Self-Regulator similar to how ATSs are currently registered with SROs. Under this approach, the markets' self-regulatory authority would be eliminated.

This model could resolve weaknesses of prior alternatives in a variety of ways. For instance, and as discussed above, it would erase the ''boundary'' issues between market and member rules associated with the Hybrid and Competing Hybrid Models because one entity would be responsible for all ''market'' and ''member'' rules. This model would establish a level playing field among competing markets in that they would all be subject to the same uniform standards of a single SRO. The Universal Industry Self-Regulator would benefit from a broader knowledge of regulated entities and markets because it would be responsible for all member and market regulation. Because one SRO would exist that would not be subject to inter-market competition, conflicts with market operations, issuers, and shareholders would be almost entirely eliminated as would regulatory redundancies.

Moreover, this approach would address the arguments that unequal funding of regulatory operations and unequal allocation of costs for regulation across the markets cause market distortions. Specifically, the existence of one SRO would prevent unequal regulation in the sense that only one entity would be responsible for the regulation across all markets. Because one SRO would be in possession of all regulatory data (rather than it being held by disparate SROs), this model would also facilitate the development of a consolidated order audit trail for intermarket trading and better enable the regulation of intermarket trading. Because of the central role the Universal Industry Self-Regulator would play in the U.S. securities markets, demutualization of the entity would likely be prohibited. Thus, the primary concern of the profit motive of a shareholder owned market detracting from proper self-regulation could be eliminated under this approach as well.

As with other models discussed, this approach has limitations. The Universal Industry Self-Regulator would be precluded from being a market specific regulator and as such would likely lack market specific expertise. In addition, member conflicts would still remain under this approach in that the Universal Industry Self-Regulator would still rely on members for funding. As discussed above, this conflict would be further complicated if the Universal Industry Self-Regulator became particularly dependent on certain large members for the disproportionately large amount of funding that they provide the SRO in regulatory fees. This universal approach would still require separate market rules to account for different market structures and types of securities traded. For instance, the market operation of an options exchange has markedly different trading rules than an equity exchange. There would also be the potential under this model for the functions of the Universal Industry Self-Regulator and the SEC to overlap with one another. Moreover, the potential for the Universal Industry Self-Regulator to become unresponsive to industry developments would greatly increase because of its size, scope, and lack of competition. Finally, implementing this model would effectively result in the elimination of the existing SROs' role and, thus, could be met with significant resistance.

The Commission specifically seeks public comment on the following questions related to the universal industry self-regulator SRO structure model:

Question 62: To what extent would the implementation of the Universal Industry Self-Regulator model effectively manage inherent SRO limitations related to conflicts, funding, redundancies, and intermarket surveillance?

Question 63: To what extent would the Universal Industry Self-Regulator model continue to provide the benefits of the current SRO system (*e.g.*, largely self-funded system with market specific expertise of SRO regulatory staff enhancing rule promulgation and enforcement)?

Question 64: Would the NASD's role as the regulator of the OTC market be completely occupied by the Universal Industry Self-Regulator or would there be a continuing need for the NASD's existence?

Question 65: To what extent would the Universal Industry Self-Regulator compete or conflict with the Commission?

F. Universal Non-Industry Regulator

Another approach, which would also require significant industry reshaping, would be the establishment of a universal non-industry regulator (''Universal Non-Industry Regulator''). Under this approach, one non-industry entity would be designated to be responsible for all markets and member regulation for all members and all markets. As with the Universal Industry Self-Regulator, this model would require all member firms to be registered with the Universal Non-Industry Regulator. All markets would be registered with the Universal Non-Industry Regulator similar to how ATSs are currently registered with SROs and would not have any self-regulatory authority. The Universal Non-Industry Regulator would be solely responsible for promulgating member and market rules, inspecting for compliance with member and market rules, and taking enforcement action with respect to member and market rules.

While not exactly analogous, this model could resemble the regulatory regime recently adopted for audits of public companies. Specifically, the Public Company Accounting Oversight Board (''PCAOB'') was established, pursuant to the Sarbanes-Oxley Act,[279] as an independent, non-profit corporation, to oversee the audits of public companies that are subject to the securities laws, and related matters, in light of significant failings in self-regulatory oversight of the accounting profession.[280] If this approach were to

[278] See Exchange Act Sections 6 and 15A, 15 U.S.C. 78f and 78k–1. It is conceivable that this approach could be achieved by the SROs engaging in an omnibus market and member regulatory agreement pursuant to Exchange Act Rule 17d–2, 17 CFR 240,17d–2. However, this approach would require significant restructuring of the existing SROs.

[279] Pub. L. 107–204, 116 Stat. 745 (2002).

[280] Prior to the establishment of the PCAOB, the American Institute of Certified Public Accountants (''AICPA'') established and interpreted Generally Accepted Auditing Standards (''GAAS''). The AICPA is a private, professional organization composed of certified public accountants (''CPAs''). The Public Oversight Board (''POB''), created by the

be adopted in the securities industry, an independent, non-profit, non-governmental body could be established to be the Universal Non-Industry Regulator. The board of the Universal Non-Industry Regulator would consist of full-time members appointed by the Commission, and would be tasked with overseeing all member and market rules for all members and all markets. The SEC would have ongoing oversight responsibility for supervising the universal regulator, including appointing and removing members, approving its budget, and approving its rules. The Universal Non-Industry Regulator approach would reduce substantially, if not eliminate, the industry's self-regulatory role in that the universal regulator's board would be entirely selected by the Commission and its staff would be entirely appointed by the board.

The sources of funding for this model would have to be established. The PCAOB is primarily funded through accounting support fees, as provided in the Sarbanes-Oxley Act, paid by issuers.[281] The goal of this funding structure is to ensure that the PCAOB's funding is independent of both the accounting profession and the federal government.[282] A determination by Congress would have to be made as to whether shifting the significant cost of regulation of the securities industry to issuers would be appropriate or if some other funding structure would be more appropriate (such as a fee on trades or on markets and broker-dealer revenues).[283]

This model would have several advantages over other approaches. For instance, this approach would likely eliminate the member rule and market rule boundary concerns that exist under the Hybrid and Competing Hybrid approaches. Even more than the Hybrid and Competing Hybrid approaches, this model would result in broad interaction between the regulator, members, and markets. Conflicts with members, market operations, issuers, and shareholders would be substantially eliminated under this model because the entity would have no direct affiliation with any of those constituencies. Regulatory redundancies would also be effectively diminished because the Universal Non-Industry Regulator would be responsible for all ''member'' and ''market'' rules for all members and markets. This would be particularly true if the NASD's role were completely subsumed by the new Universal Non-Industry Regulator. As with the Hybrid and Competing Hybrid models, this approach would address the concern of unequal funding and unequal allocation of regulatory costs across markets. Moreover, cross market surveillance would likely be facilitated by this approach because the Universal Non-Industry Regulator would be responsible for all regulatory data from all markets. Because of the critical role the Universal Non-Industry Regulator would play in the U.S. securities markets, demutualization of the entity would likely be prohibited. Thus, the primary concern of the profit motive of a shareholder owned market detracting from proper self-regulation could be eliminated under this approach as well.

This model also has serious drawbacks. For example, it could result in a lower degree of market specific expertise in the regulator. In addition, the degree of direct industry involvement with respect to rulemaking and enforcement would be significantly reduced, which could reduce the Universal Non-Industry Regulator's ability to refine and target its regulation. Market rules would still differ to account for different market structures and types of securities traded. As with the Universal Industry Self-Regulator, there would be the potential under this model for the regulatory entity and the SEC to overlap or even compete with one another. In addition, there is also the risk that this model would become inefficient, inflexible, and unresponsive to evolutionary market practices. Also similar to the Universal Industry Self-Regulator, this model would likely require legislation and could be met with resistance from the existing SROs, whose SRO role would be largely eliminated.

The Commission specifically seeks public comment on the following questions related to the Universal Non-Industry Regulator model:

Question 66: To what extent would the implementation of the Universal Non-Industry Regulator model effectively manage inherent SRO limitations related to conflicts, funding, redundancies, and intermarket surveillance?

Question 67: To what extent would the Universal Non-Industry Regulator model continue to provide the benefits of the current SRO system (*e.g.,* largely self-funded system with market specific expertise of SRO regulatory staff enhancing rule promulgation and enforcement)?

Question 68: How would the Universal Non-Industry Regulator model be funded?

Question 69: What would be the relationship between the Universal Non-Industry Regulator, the Commission, and the NASD under this model?

G. SEC Regulation

Another alternative that will be discussed in this section would be the termination of the SRO system in favor of direct Commission regulation of the industry. Under this approach, the Commission would be solely responsible for the market and member regulation of all members and all markets. All member firms and markets would be required to register directly with the Commission under this model. Markets would be non-SROs registered with the Commission similar to how ATSs are currently registered with SROs. The markets' registered status, however, would carry with it no self-regulatory authority. The Commission would be responsible for the promulgation of detailed member and market rules, the surveillance of members and markets, and the enforcement of member and market

AICPA, administered peer reviews of CPAs to assess whether CPAs' auditing practices were in conformity with GAAS. Jerry W. Markham, *Accountants Make Miserable Policemen: Rethinking the Federal Securities Laws*, 28 N.C.J. Int'l L. & Com. Reg. 725, 764–80 (2003). In addition, the Financial Accounting Standards Board (''FASB'') promulgated Generally Accepted Accounting Principles (''GAAP'').

The PCAOB was given broad authority, including the power: (1) to register public accounting firms; (2) to set rules covering auditing, ethics, quality control and independence standards; (3) to inspect the auditing operations of registered public accounting firms; (4) to investigate and discipline registered public accounting firms and associated persons of such firms; and (5) to enforce compliance with the new legislation, the PCAOB's own rules and certain securities laws. The standards for audits of public companies are now set by the PCAOB, not the accounting profession. While the AICPA still has a role in setting the standards for audits of non-public companies, the POB has been terminated. There has been no change in the setting of accounting standards, where the FASB, as the standards-setting body designated by the Commission, retains primary responsibility for the promulgation of GAAP, subject to the Commission's oversight. Markham at 790–92.

[281] Section 109 of the Sarbanes-Oxley Act.

[282] The Sarbanes-Oxley Act provides that the PCAOB be funded by accounting support fees assessed on issuers as defined therein. Each year the PCAOB develops an operating budget that must be approved by the Commission. The 2003 PCAOB budget, as approved by the Commission, was $68 million. The accounting support fees are equal to the PCAOB's total budgeted outlays for the fiscal year in which they are set, less the amount of fees received from public accounting firms to cover the cost of processing and reviewing registration applications. The accounting support fees are based on the average monthly U.S. equity market capitalization of publicly traded companies, investment companies, and other equity issuers. Issuers with average market capitalizations below $25 million and investment companies with net assets of less than $250 million are exempt from the fees. PCAOB, 2003 Annual Report 15 (2004). The 2004 PCAOB accounting support fee, as approved by the Commission, was $101 million.

[283] Total combined SRO operating expenses in 2003 were over $2.4 billion. *See* supra note 197.

rules. With respect to funding, this model would require dramatic change in that the public would be directly responsible for substantially all of the costs of regulating the industry, albeit perhaps, through a range of fees imposed on the industry for the Commission's increased services. The Commission, however, is not self-funded under its enabling statute and, thus, Congress would need to appropriate funds for this approach.[284]

Benefits could be gained from this approach. For instance, because only one centralized regulator would exist, SEC direct regulation would eliminate substantially all of the conflicts that exist between SRO regulation and members, market operations, issuers, and shareholders. As with the Hybrid, Competing Hybrid, Universal Industry Self-Regulator, and Universal Non-Industry Regulator approaches, direct SEC regulation would provide the Commission with a broader understanding of the members and markets. Conflicting member rules, interpretations, and inspection regimes, and regulatory redundancies would be eliminated under this model because the Commission would be able to adopt uniform member rules. The Commission would need to adopt numerous detailed operations and conduct rules for members to replace existing SRO rules related to business practices and just and equitable principles of trade. Cross market surveillance would likely be facilitated by this approach because the relevant regulatory data would be collected and examined by the Commission, rather than by disparate SROs. In addition, this model could potentially align the U.S. regulatory scheme more closely with those of a variety of other countries.[285]

An SEC-only approach would also have numerous problems. The SEC would be responsible for detailed regulation and interpretation of complex areas previously the province of SROs, without the aid of direct industry involvement and with a significant lessening of industry input in rulemaking. Market specific rules, under this model, would still conflict because of the markets' different market structures and types of securities traded. Direct Commission regulation would be governed by the limitations and rules addressing federal rulemaking and would be undertaken in a political environment and the cost of carrying out all of the duties of the SROs would be extensive. It is important to note that the Commission has attempted to undertake direct SRO level regulatory duties in the past. As discussed above, the Commission ultimately requested that Congress terminate the SECO program because the Commission could not effectively carry out the detailed responsibilities required.[286]

The Commission specifically seeks public comment on the following questions related to the direct SEC regulation model:

Question 70: To what extent would the implementation of the direct SEC regulation model effectively manage inherent SRO limitations related to conflicts, funding, redundancies, and intermarket surveillance?

Question 71: To what extent would direct SEC regulation continue to provide the benefits of the current SRO system (*e.g.,* largely self-funded system with market specific expertise of SRO regulatory staff enhancing rule promulgation and enforcement)?

Question 72: Could current SRO staff be effectively drawn upon by the Commission under the direct SEC regulation model, or would this staff be inappropriately influenced by their prior affiliations with specific SROs?

H. Other Models

Alternative models of regulation exist that were not specifically explored in this release. Such approaches may be variations of the above alternatives or completely different models. The Commission specifically seeks public comment on the following question:

Question 73: Are there any other approaches to regulation of the securities industry that are worthy of consideration whether discussed herein or not? Should the current model remain unaltered?

VI. Solicitation of Additional Comments

In addition to the areas for comment identified above, we are interested in any other issues that commenters may wish to address relating to the current structure of the SRO system, potential enhancements that could be made to the current system, or potential models that could be implemented that would restructure the SRO system. Please be as specific as possible in your discussion and analysis of any additional issues. Where possible, please provide empirical data or observations to support or illustrate your comments.

By the Commission.

Dated: November 18, 2004.

Margaret H. McFarland,

Deputy Secretary.

[FR Doc. 04–26154 Filed 12–7–04; 8:45 am]

BILLING CODE 8010–01–P

[284] Although the Commission currently deposits the variety of fees that it collects in the U.S. Treasury, where its deposits are treated as offsetting collections and not general funds of the Treasury, it cannot deposit its fees in a depository institution, and its monies are annually appropriated and apportioned. U.S. General Accounting Office Report to Congressional Committees, ''SEC Operations '' Implications of Alternative Funding Structures,'' 1 (July 2002).

[285] For instance, the Financial Services Authority (''FSA'') was created in the United Kingdom in 1997 and is an ''independent non-governmental body which exercises statutory powers.'' Through the creation of the FSA, the duties of nine regulatory entities were consolidated and the use of the British equivalent of U.S. SROs was abandoned. The FSA was given extensive financial regulation responsibility, assuming the same roles played in the U.S. by the SEC, the Commodity Futures Trading Commission, federal and state banking regulators, state insurance and state securities commissions, as well as the SROs. Among other initiatives, the FSA has assigned one office to develop policy on prudential issues across all financial sectors, so as to develop a common approach to risk and capital requirements. The agency also announced that it was streamlining the existing financial services rules and has been focusing its regulatory attention on high-risk firms. See Jerry W. Markham, *A Comparative Analysis of Consolidated and Functional Regulation: Super Regulator: A Comparative Analysis of Securities and Derivatives Regulation in the United States, United Kingdom, and Japan,* 28 Brooklyn J. Int'l L. 319, 374–82 (2003).

[286] *See* supra note 181.

Federal Register

Wednesday,
December 8, 2004

Part IV

Department of the Interior

Fish and Wildlife Service

50 CFR Part 17

Endangered and Threatened Wildlife and Plants: Proposed Designation of Critical Habitat for Brodiaea filifolia (thread-leaved brodiaea); Proposed Rule

DEPARTMENT OF THE INTERIOR

Fish and Wildlife Service

50 CFR Part 17

RIN 1018–AT75

Endangered and Threatened Wildlife and Plants; Proposed Designation of Critical Habitat for Brodiaea filifolia (thread-leaved brodiaea)

AGENCY: Fish and Wildlife Service, Interior.

ACTION: Proposed rule.

SUMMARY: We, the Fish and Wildlife Service (Service), propose to designate critical habitat pursuant to the Endangered Species Act of 1973, as amended (Act), for the federally threatened *Brodiaea filifolia* (thread-leaved brodiaea). We have determined that 9,403 acres (ac) (3,805 hectares (ha)) of habitat with essential features exists for *Brodiaea filifolia* in Los Angeles, San Bernardino, Orange, Riverside, and San Diego counties. Of this eligible habitat, we are proposing to designate approximately 4,690 ac (1,898 ha) of land in 10 units in Los Angeles, San Bernardino, Orange, and San Diego Counties, California, as critical habitat for this species. Eligible habitat in Riverside and portions of San Diego counties covered by approved and/or pending habitat conservation plans is being proposed for exclusion from critical habitat under 4(b)(2) of the Act.

DATES: We will accept comments from all interested parties until February 7, 2005. We must receive requests for public hearings, in writing, at the address shown in the **ADDRESSES** section by January 24, 2005.

ADDRESSES: If you wish to comment, you may submit your comments and information concerning this proposal by any one of several methods:

1. You may submit written comments and information to the Field Supervisor, U.S. Fish and Wildlife Service, Carlsbad Fish and Wildlife Office, 6010 Hidden Valley Road, Carlsbad, CA 92009.

2. You may hand-deliver written comments and information to our office at the above address.

3. You may send comments and information by electronic mail (e-mail) *fw1cfwo_brfi@fws.gov*. Please see the ''Public Comments Solicited'' section below for file format and other information about electronic filing.

4. You may fax your comments to 760–431–3624.

Comments and materials received, as well as supporting documentation used in preparation of this proposed rule, will be available for public inspection, by appointment, during normal business hours at the Carlsbad Fish and Wildlife Office (at the above address) (telephone number 760–431–9440).

FOR FURTHER INFORMATION CONTACT: Field Supervisor, Carlsbad Fish and Wildlife Service (see **ADDRESSES** section).

SUPPLEMENTARY INFORMATION:

Public Comments Solicited

We intend that any final action resulting from this proposal be as accurate as possible. Accordingly, we hereby solicit comments or suggestions from the public, other governmental agencies and entities, Tribes, the scientific community, industry, and any other interested parties regarding this proposed rule. In particular, we seek comments concerning:

(1) The reasons any areas should or should not be determined to be critical habitat as provided by section 4 of the Act, including whether the benefits of designation will outweigh threats to the species due to the designation;

(2) Specific information on the amount and distribution of *Brodiaea filifolia* and its habitat, specifically updated information on specific populations or occurrences and what habitat or habitat components or features are essential to the conservation of this species and why;

(3) Land use designations and current or planned activities in or adjacent to the subject areas and their possible impacts on proposed critical habitat;

(4) Any foreseeable economic, national security, or other potential impacts which could result from the proposed designation and, in particular, any impacts to small entities; and

(5) Whether our approach to designating critical habitat could be improved or modified in any way to provide for greater public participation and understanding, or to assist us in accommodating public concerns and comments.

(6) We request information from the Department of Defense to assist the Secretary of the Interior in evaluating critical habitat on lands administered by or under the control of the Department of Defense based on any benefit provided by an Integrated Natural Resources Management Plan (INRMP) to the conservation of *Brodiaea filifolia*; and information regarding impacts to national security associated with proposed designation of critical habitat.

If you wish to comment, you may submit your comments and materials concerning this proposal by any one of several methods (see **ADDRESSES** section). Please submit Internet comments to *fw1cfwo_brfi@fws.gov* in ASCII file format and avoid the use of special characters or any form of encryption. Please also include ''Attn: *Brodiaea filifolia*'' in your e-mail subject header and your name and return address in the body of your message. If you do not receive a confirmation from the system that we have received your internet message, contact us directly by calling our Carlsbad Fish and Wildlife Office at phone number 760–431–9440. Please note that the Internet address *fw1cfwo_brfi@fws.gov* will be closed out at the termination of the public comment period.

Our practice is to make comments, including the names and home addresses of respondents, available for public review during regular business hours. Individual respondents may request that we withhold their home address from the rulemaking record, and we will honor such requests to the extent allowable by law. There also may be circumstances in which, as allowable by law, we would withhold from the rulemaking record a respondent's identity. If you wish us to withhold your name and/or address, you must state this prominently at the beginning of your comment. We will not, however, consider anonymous comments. The Service will make all submissions from organizations or businesses, and from individuals identifying themselves as representatives or officials of organizations or businesses, available for public inspection in their entirety. Comments and materials received will be available for public inspection, by appointment, during normal business hours at the above address.

Designation of Critical Habitat Provides Little Additional Protection to Species

In 30 years of implementing the Act, we have found that the designation of statutory critical habitat provides little additional protection to most listed species, while consuming significant amounts of available conservation resources. Our present system for designating critical habitat has evolved since its original statutory prescription into a process that provides little real conservation benefit, is driven by litigation and the courts rather than biology, limits our ability to fully evaluate the science involved, consumes enormous agency resources, and imposes huge social and economic costs. We believe that additional agency discretion would allow our focus to return to those actions that provide the greatest benefit to the species most in need of protection.

Role of Critical Habitat in Actual Practice of Administering and Implementing the Act

While attention to and protection of habitat is paramount to successful conservation actions, we have consistently found that, in most circumstances, the designation of critical habitat is of little additional value for most listed species, yet it consumes large amounts of conservation resources. Sidle (1987) stated, ''Because the Act can protect species with and without critical habitat designation, critical habitat designation may be redundant to the other consultation requirements of section 7.'' Currently, only 467 species or 37 percent of the 1,255 listed species in the United States under our jurisdiction have designated critical habitat. We address the habitat needs of all 1,255 listed species through conservation mechanisms such as listing, section 7 consultations, the Section 4 recovery planning process, the Section 9 protective prohibitions of unauthorized take, Section 6 funding to the States, and the Section 10 incidental take permit process. We believe that it is these measures that may make the difference between extinction and survival for many species.

We note, however, that a recent 9th Circuit judicial opinion, *Gifford Pinchot Task Force* v. *United States Fish and Wildlife Service*, has invalidated the Service's regulation defining destruction or adverse modification of critical habitat. We are currently reviewing the decision to determine what effect it may have on the outcome of consultations pursuant to Section 7 of the Act.

Procedural and Resource Difficulties in Designating Critical Habitat

We have been inundated with lawsuits for our failure to designate critical habitat, and we face a growing number of lawsuits challenging critical habitat determinations once they are made. These lawsuits have subjected us to an ever-increasing series of court orders and court-approved settlement agreements, compliance with which now consumes nearly the entire listing program budget. This leaves us with little ability to prioritize our activities to direct scarce listing resources to the listing program actions with the most biologically urgent species conservation needs.

The consequence of the critical habitat litigation activity is that limited listing funds are used to defend active lawsuits, to respond to Notices of Intent (NOIs) to sue relative to critical habitat, and to comply with the growing number of adverse court orders. As a result, listing petition responses, our own proposals to list critically imperiled species, and final listing determinations on existing proposals are all significantly delayed.

The accelerated schedules of court-ordered designations have left us with almost no ability to provide for adequate public participation or to ensure a defect-free rulemaking process before making decisions on listing and critical habitat proposals due to the risks associated with noncompliance with judicially-imposed deadlines. This in turn fosters a second round of litigation in which those who fear adverse impacts from critical habitat designations challenge those designations. The cycle of litigation appears endless, is very expensive, and in the final analysis provides relatively little additional protection to listed species.

The costs resulting from the designation include legal costs, the cost of preparation and publication of the designation, the analysis of the economic effects and the cost of requesting and responding to public comment, and in some cases the costs of compliance with NEPA; all are part of the cost of critical habitat designation. None of these costs result in any benefit to the species that is not already afforded by the protections of the Act enumerated earlier, and they directly reduce the funds available for direct and tangible conservation actions.

Background

It is our intent to discuss only those topics directly relevant to the designation of critical habitat in this proposed rule and that clarify the species description and biology provided in the final listing rule. Additional information on the biology and ecology of *Brodiaea filifolia* and the factors affecting the species can be found in the final rule listing the species as threatened, published in the **Federal Register** on October 13, 1998 (63 FR 54975).

Brodiaea filifolia is a perennial herb in the Liliaceae (lily family) that produces leaves and flower stalks from dark-brown, fibrous-coated underground corms (underground bulb-like storage stem that lacks succulent leaves). Corms are dormant in the summer but begin growing after the first significant fall rains saturate the soil. Leaves grow slowly throughout the winter. At the time of flowering, generally early summer, the leaves of *Brodiaea* are dead or nearly so and next season's corms are mature. The flowering period lasts for two to three weeks, and development of the capsules and seeds takes four to eight weeks. The rate of deposition and duration of seeds in the soil is unknown. However, it is likely that the majority of seeds produced in the capsules are dispersed nearby and as such would be expected to be scattered among the standing plants at any given occurrence. Conditions conducive to triggering natural germination are also unknown. Leaves are likely produced every year. Young plants may produce only leaves for a few seasons before having enough food stores to be capable of producing flower stalks. Leaves appear in early spring and die back by the time of flowering which typically occurs from May to June. Even mature specimens may not flower every year, depending upon environmental conditions. The flower stalks are 20 to 40 cm (8 in to 16 in) tall. The tubular flowers are 9 mm to 12 mm (0.4 in to 0.5 in) long and are arranged in loose umbels. The six perianth segments are violet, with their tips spreading. The staminodia (characteristic sterile stamens) are narrow and pointed.

All species of *Brodiaea* are self-incompatible, requiring cross-pollination to set seed. The corm is the principal means by which plants of the genus *Brodiaea* perpetuate themselves (Niehaus 1971). Seedlings produce contractile roots (roots of specialized form designed to shrink vertically under conditions of seasonal drying) for the first few years. These roots swell with moisture in the wet season creating a space in the malleable clay substrate. As the season progresses, the succulent root dries and shrinks vertically, drawing the young corm down into the ground. This is repeated for a few years until the soil moisture is insufficient to support the contractile root. The corm from the previous year is replaced by an adjacent new corm each year. The new corm of a mature plant often produces two to fifteen cormlets (Niehaus 1971).

The historical range of *Brodiaea filifolia* extends from the foothills of the San Gabriel Mountains in Los Angeles County (Glendora and San Dimas), east to the western foothills of the San Bernardino Mountains in San Bernardino County (Arrowhead Hot Springs), south through eastern Orange and western Riverside Counties to northern San Diego County (Highland Valley) (USFWS 1998; CNDDB 2003; City of San Diego 1997; SANDAG 2003). This species is usually found in herbaceous plant communities that occur in open areas on clay soils, soils with clay subsurface, or clay lenses within loamy, silty loam, or alkaline soils, and elevations of 100 ft (30 m) to 2,500 ft (765 m), depending on soil

series. These plant communities are generally classified as non-native grassland, valley needlegrass grassland, valley sacaton grassland, alkali playa, southern interior basalt vernal pools, San Diego mesa hardpan vernal pools, and San Diego mesa claypan vernal pools (Holland 1986). Based upon dominant species, these communities have been further divided into series which include, but are not limited to, California annual grassland, nodding needlegrass, purple needlegrass, foothill needlegrass, saltgrass, alkali grassland, alkali playa, and bush seepweed and habitats such as San Diego mesa vernal pools, San Jacinto Valley vernal pools, and Santa Rosa Plateau vernal pools (Sawyer and Keeler-Wolf 1994). *Brodiaea filifolia* grows in association with coastal sage scrub vegetation in some areas, such as Los Angeles and San Bernardino Counties.

Brodiaea filifolia has also been found in the San Mateo Wilderness Area near the northern border of San Diego and Riverside counties and in the Miller Peak area in the Santa Ana Mountains of western Riverside County. These occurrences appear to include some hybrids between *B. filifolia* and *B. orcuttii*. Occurrences in the San Mateo Wilderness Area have been observed along the banks of, and within, intermittent stream channels, and those in the Miller Peak area have been observed on clay soils in southern needlegrass grassland (Boyd *et al.* 1992). In Miller Canyon, a tributary that drains the southern flank of Miller Mountain, the species and some hybrids are found on deposits of gravel, cobble, and small boulders along the stream channel in association with tussocks of *Juncus macrophyllus* and *Muhlenbergia rigens* and in vernal seeps and on open, clayey benches (Boyd *et al.* 1992).

All members of the genus *Brodiaea* appear to require full sun, and many tend to occur on only one or a few soil series (Niehaus 1971). In San Diego, Orange, and Los Angeles Counties, occurrences of *Brodiaea filifolia* are highly correlated with specific clay soil series such as, but not limited to, Alo, Altamont, Auld, and Diablo or clay lens inclusions in a matrix of loamy soils such as Fallbrook, Huerhuero, and Las Flores series (63 FR 54975, CNDDB 2003, Service GIS data 2004). In San Bernardino, the species is associated with Etsel family-Rock outcrop-Springdale and Tujunga-Urban land-Hanford soils (Service GIS data 2004). In western Riverside County, the species is often found on alkaline silty-clay soil series such as, but not limited to, Domino, Grangeville, Waukena, and Willows or on clay loam soils underlain by heavy clays derived from basalt lava flows (*i.e.,* Murrieta series on the Santa Rosa Plateau) (U.S. Department of Agriculture 1971, Bramlet 1993, CNDDB 2003). On these soils, *B. filifolia* is typically found as a constituent of native perennial and non-native annual grasslands. In San Marcos, the Santa Rosa Plateau, and near Hemet, these grasslands are often part of the watersheds for vernal pool and playa complexes (Bramlet 1993, Service 1998, CNDDB 2003). These soils enable the natural process of seed dispersal and germination, cormlet deposition to an appropriate soil depth, and corm persistence through seedling and adult phases of flowering and fruit set described earlier.

Members of the genus *Brodiaea* likely rely on Tumbling Flower Beetles (Coleoptera) and Sweat Bees (Hymenoptera) for cross-pollination (Niehaus 1971). The home ranges and species fidelity of these pollinators is not known. Alternative pollen source plants may be necessary for the persistence of these insects when *Brodiaea filifolia* is not in flower seasonally or annually because of poor environmental conditions. Studies to quantify the distance that bees will fly to pollinate their host plants are limited in number, but the few that exist show that some bees will routinely fly 100 to 500 m (328 to 984 ft) to pollinate plants. Studies by Steffan-Dewenter and Tscharntke (2000) have demonstrated that it is possible for bees to fly at least 1,000 m (3,280 ft) to pollinate flowers, and at least one study suggests that bumblebees may forage many kilometers from a colony (Sudgen 1985).

The size of a particular population of *Brodiaea* species, as well as other corm and bulb forming species, is often measured by counting numbers of standing flower stalks. However, because more plants flower in wet years than dry years, flowering plants likely represent only a portion of the total population of plants present at any given site. In addition to the annual fluctuation in numbers of flowering plants, seedlings and young plants likely only produce leaves for a few years before they are able to produce flower stalks. These vegetative plants may go undetected in surveys.

By 1998, at least 25 percent of *Brodiaea filifolia* populations or occurrences were eliminated by urbanization and agricultural conversion (63 FR 54975). This species has also been impacted by non-agricultural disking for fire and weed control as well as grading (White and Bramlet 2004). Urban development and flood control projects are among the continuing threats to this species in Orange, Riverside, and San Diego Counties. White and Bramlet (2004) note that habitats for *Brodiaea filifolia* in Orange County and some in San Diego County are degraded by ''dense infestations'' of the perennial *Cynara cardunculus* (artichoke thistle). The species is also threatened by recreational activities such as off-road vehicle use; clearing for firebreaks; alteration of existing hydrologic conditions resulting from construction and operation of flood control structures; over-grazing; and competition from non-native plant species (USFWS 1998, RECON 1999, CNDDB 2003).

Translocation may also be a threat to this species. Translocation efforts associated with mitigation for development projects have not, on the whole, proved to be successful in conserving the species (Fiedler 1991). Information on file for ten mitigation based translocations suggests that there has been little consistency or recording of translocation methodology or project design, minimal effective monitoring, and success was either deemed negative or unknown. For all ten projects the stated objective of the translocation effort was to salvage plants from sites to be developed. Accounting for the numbers and origins of corms has been poorly documented. In some cases agreed-upon endowments to cover monitoring and management were not provided. Monitoring has not provided information about establishment of new plants from those translocated to the receptor sites. Even if individuals become established, the survival of transplanted corms does not necessarily indicate success for the species. Due to the lack of successful translocations of this species, listed as endangered by the State, staff at the California Department of Fish and Game (CDFG) attempt to negotiate the avoidance of translocation for this species citing take provisions under Section 2081(a) of the Fish and Game Code. The loss of all or portions of native populations of *B. filifolia* due to habitat loss coupled with the failure of translocation efforts continues to contribute to the decline of *B. filifolia.*

Previous Federal Actions

For more information on previous federal actions concerning *Brodiaea filifolia* prior to the time of listing, refer to the final rule listing the species as threatened published in the **Federal Register** on October 13, 1998 (63 FR 54975). A recovery plan for *B. filifolia* has not yet been completed. The following text discusses those Federal

actions that occurred subsequent to the listing.

On November 15, 2001, a lawsuit was filed against the Department of the Interior (DOI) and the Service by the Center for Biological Diversity and California Native Plant Society, challenging our ''not prudent'' determinations for eight plants including *Brodiaea filifolia* (No. CV–01–2101) (*CBD et al.* v. *USDOI*). A second lawsuit asserting the same challenge was filed against the DOI and the Service by the Building Industry Legal Defense Foundation (BILD) on November 21, 2001 (No. CV–01–2145) (*BILD* v. *USDOI*). Both cases consolidated on March 19, 2002, and all parties agreed to remand the critical habitat determinations to the Service for additional consideration. In a July 1, 2002, order, the U.S. District Court for the Southern District of California directed us to publish a new prudency determination and/or propose critical habitat for *B. filifolia* on or before November 30, 2004. This proposed rule to designate critical habitat complies with the court's ruling.

Critical Habitat

Critical habitat is defined in section 3 of the Act as—(i) the specific areas within the geographic area occupied by a species, at the time it is listed in accordance with the Act, on which are found those physical or biological features (I) essential to the conservation of the species'' and (II) that may require special management considerations or protection; and (ii) specific areas outside the geographic area occupied by a species at the time it is listed, upon a determination that such areas are essential for the conservation of the species. ''Conservation'' means the use of all methods and procedures that are necessary to bring an endangered or a threatened species to the point at which listing under the Act is no longer necessary.

Critical habitat receives protection under section 7 of the Act through the prohibition against destruction or adverse modification of critical habitat with regard to actions carried out, funded, or authorized by a Federal agency. Section 7 requires conference on Federal actions that are likely to result in the destruction or adverse modification of proposed critical habitat, and consultation on Federal actions that may affect designated critical habitat.

In the geographic area occupied by the species, critical habitat designations identify, to the extent known using the best scientific and commercial data available, habitat areas that provide essential life cycle needs of the species (*i.e.,* areas on which are found the primary constituent elements, as defined at 50 CFR 424.12(b)).

Our regulations state that, ''The Secretary shall designate as critical habitat areas outside the geographic area presently occupied by the species only when a designation limited to its present range would be inadequate to ensure the conservation of the species'' (50 CFR 424.12(e)). Accordingly, when the best available scientific and commercial data do not demonstrate that the conservation needs of the species so require, we will not designate critical habitat in areas outside the geographic area occupied by the species.

Our Policy on Information Standards Under the Endangered Species Act, published in the **Federal Register** on July 1, 1994 (59 FR 34271) and our U.S. Fish and Wildlife Service Information Quality Guidelines (2002) provide criteria, establish procedures, and provide guidance to ensure that our decisions represent the best scientific and commercial data available. These policies and guidelines require us, to the extent consistent with the Act and with the use of the best scientific and commercial data available, to use primary and original sources of information as the basis for recommendations to designate critical habitat. When determining which areas are critical habitat, a primary source of information should be the listing package for the species. Additional information may be obtained from a recovery plan, articles in peer-reviewed journals, conservation plans developed by States and Counties, scientific status surveys and studies, biological assessments, or other unpublished materials and expert opinion or personal knowledge.

This proposed critical habitat designation is not intended to suggest that habitat outside the delineated area is unimportant to *Brodiaea filifolia.* Areas outside the critical habitat designation will continue to be subject to conservation actions that may be implemented under section 7(a)(1), and to the regulatory protections afforded by the section 7(a)(2) jeopardy standard and applicable section 9 prohibitions, as determined on the basis of the best available information at the time of the action. We specifically anticipate federally funded or assisted projects affecting listed species outside their designated critical habitat areas may still result in jeopardy findings in some cases. Similarly, critical habitat designations made on the basis of the best available information at the time of designation will not control the direction and substance of future recovery plans, habitat conservation plans, or other species conservation planning efforts if new information available to these planning efforts calls for a different outcome.

Methods

As required by section 4(b)(1)(A) of the Act, we used the best scientific and commercial data available in determining areas that contain the features that are essential to the conservation of *Brodiaea filifolia.* We designated no areas outside the geographic area presently occupied by the species. These included data and information from research and survey observations in published, peer-reviewed articles, and data provided by the California Department of Fish and Game (CDFG), and data provided by the California Natural Diversity Database (CNDDB). We also reviewed available information pertaining to the habitat requirements of this species including the final listing rule; our draft Recovery Plan; data and information included in reports submitted during section 7 consultations; information contained in species analyses for individual and regional Habitat Conservation Plans (HCPs) where *B. filifolia* is a covered species or is being proposed for coverage; data collected on Marine Corps Base (MCB) Camp Pendleton; data collected from reports submitted by researchers holding section 10(a)(1)(A) recovery permits; and information received from local species experts.

Habitat that contains the features essential to the conservation of the species was delineated by examining (1) species occurrence information in Los Angeles, San Bernardino, Orange, Riverside, and San Diego Counties from the CNDDB and from survey reports; (2) vegetation data layers from Orange, Riverside, and San Diego Counties and vegetation data layers from the U.S. Forest Service's Cleveland National Forest for Los Angeles and San Bernardino Counties; (3) Natural Resources Conservation Service's Soil Survey Geographic Database (SSURGO) soil data layers for Orange, Riverside, and San Diego Counties, and State Soil Geographic Database (STATSGO) soil data layers for Los Angeles and San Bernardino Counties; and (4) slope data derived from a 30-meter digital elevation model (DEM). These layers were overlaid on digital ortho quarter quadrangle (DOQQ) satellite imagery layers, and habitat was delineated in areas that had an extant species occurrence within them, had not undergone development, had the PCE's including suitable soil and vegetation

types, and had a slope of less than 20 degrees. After creating a GIS coverage of the eligible areas, we created legal descriptions of these areas. We used a 100-meter grid to establish Universal Transverse Mercator (UTM), North American Datum (NAD) 27 coordinates which, when connected, provided the boundaries of the eligible habitat areas.

Primary Constituent Elements

In accordance with section 3(5)(A)(i) of the Act and regulations at 50 CFR 424.12, in determining which areas to propose as critical habitat, we are required to base critical habitat determinations on the best scientific and commercial data available and to consider those physical and biological features, otherwise referred to as primary constituent elements, essential to the conservation of the species, and which may require special management considerations or protection. These include, but are not limited to: space for individual growth and population expansion; water, air, light, minerals, or other nutritional or physiological requirements; cover or shelter; and habitats that are protected from disturbance or are representative of the historic geographical and ecological distributions of a species.

These physical and biological features provide for the following: (1) Areas for growth of individuals and populations, including sites suitable for sexual and asexual (cormlet) reproduction, pollination and pollen dispersal, seed dispersal and germination, and maintenance of seed banks; (2) intervening areas suitable to facilitate gene flow and connectivity or linkages within and among eligible occurrences; and (3) maintenance of areas that provide basic requirements for growth such as water, light, nutrients, and minerals.

The conservation of *Brodiaea filifolia* is dependent upon several factors that include, but are not limited to, the protection and management of existing populations and the habitat which supports them; the maintenance of areas of sufficient size and configuration to sustain natural ecosystem components, functions, and processes (*e.g.,* full sun exposure, natural fire and hydrologic regimes, adequate biotic balance to prevent excessive herbivory); protection of existing substrate continuity and structure, connectivity among groups of plants within geographic proximity to facilitate gene flow among the sites through pollinator activity and seed dispersal; and sufficient adjacent suitable habitat for vegetative reproduction and population expansion. The areas being proposed for designation as critical habitat provide one or more of the physical or biological features essential for the conservation of this species.

Lands being proposed for designation as critical habitat for *B. filifolia* occur within the historical range of the species. Based on the best available scientific and commercial information available regarding the life history, ecology, and distribution of this species, we believe that the primary constituent elements of critical habitat for *B. filifolia* consist of the following:

(1) Appropriate soil series and associated vegetation at suitable elevations of either:

(A) Clay soil series of various origins (*e.g.,* Alo, Altamont, Auld, Diablo), clay lenses found as unmapped inclusions in other soils series, or within loamy soils underlain by a clay subsoil (*e.g.,* Fallbrook, Huerhuero, Las Flores) that generally occur on mesas and gentle to moderate slopes, or in association with vernal pools, between the elevations of 100 ft (30 m) and 2,500 ft (765 m) and support open native or non-native grassland communities, open coastal sage scrub, or coastal sage scrub-chaparral communities; or

(B) Silty loam soil series underlain by a clay subsoil or caliche that are generally poorly drained, moderately to strongly alkaline, granitic in origin (*e.g.,* Domino, Grangeville, Waukena, Willows), that generally occur in low-lying areas and floodplains, often in association with vernal pool or playa complexes, between the elevations of 600 ft (180 m) and 1,800 ft (550 m) and support native, non-native, or alkali grassland or scrub communities; or

(C) Clay loam soil series (*e.g.,* Murrieta) underlain by heavy clay loams or clays derived from olivine basalt lava flows, that generally occur on mesas and gentle to moderate slopes between the elevations of 1,700 ft (520 m) and 2,500 ft (765 m) and support native or non-native grassland or oak woodland savannah communities associated with basalt vernal pools; or

(D) Sandy loam soils derived from basalt and granodiorite parent materials, deposits of gravel, cobble, and boulders, or hydrologically-fractured weathered granite in intermittent streams and seeps that support open riparian and freshwater marsh communities associated with intermittent drainages, floodplains, and seeps generally between 1,800 ft (550 m) and 2,500 ft (765 m).

(2) Areas with an intact surface and subsurface structure not permanently altered by anthropogenic land use activities (*e.g.,* deep, repetitive disking; grading). These features as well as associated physical processes (*e.g.,* full sunlight exposure) are essential to maintain those substrate and vegetation types where *Brodiaea filifolia* is found and to support pollinator assemblages necessary to facilitate gene flow within and among populations of *B. filifolia.*

Criteria Used To Identify Critical Habitat

As discussed in the *Methods* section, we identified 9,403 ac (3,806 ha) of eligible habitat for *Brodiaea filifolia.* We delineated proposed critical habitat using the following criteria: (1) Essential occurrences; (2) presence of suitable vegetation; (3) presence of suitable soil types; and (4) an area about 250 m of vegetation surrounding each occurrence to provide for pollinator habitat. We then analyzed the critical habitat areas to determine if any areas should be excluded from the proposed designation under section 4(b)(2) of the Act (see ''Exclusions Under Section 4(b)(2) of the Act'' for a detailed discussion).

We defined eligible occurrences as areas of intact, occupied habitat supporting 1,000 or more naturally occurring individuals of *Brodiaea filifolia,* areas necessary to maintain gene flow, and/or areas containing significant populations. We defined significant populations as those found in unique habitat, supported by historical records in Niehaus 1971 and/or the CNDDB 2003 reports for the species. For example, populations found within an atypical vegetative community, on atypical soils, and/or at an atypical elevation. Essential occurrences found within unique habitat types harbor genetic diversity that may allow for their persistence in these areas. This overall diversity may be important to the conservation of the species.

Significant populations are also often peripheral populations. Peripheral populations of a species are separable by geographical and/or ecological differences from central populations (Lesica and Allendorf 1995). Conservation of species may depend upon protecting the genetic variability present across the range of a species. Reduced gene flow and limited seed dispersal may contribute to the genetic diversity of peripheral populations attributable to genetic drift from central populations. Population divergence may also be attributed to differences in habitat such as soil types, fire frequency, and climate (Lessica and Allendorf 1995). Ornduff (1966) found the highest concentration of morphological and cytological variants at the margin of the geographic range of species of *Lasthenia.* For these reasons,

conservation of geographically (*e.g.* Los Angeles and San Bernardino Counties) and ecologically (*e.g.* Devil's Canyon) peripheral populations may be essential for the conservation of this species.

Currently, the exact number of extant populations or occurrences of *Brodiaea filifolia* is unknown. Reasons for this include the lack of surveys in areas of suitable habitat, false negative survey results yielded during inappropriate seasons, and variation in how survey data is recorded. For example, some surveyors may record populations within close proximity as a single occurrence while others may record each population as an individual occurrence. According to Table 3 of White and Bramlet (2004), approximately 83 occurrences of this species are currently known throughout its range. We were recently made aware of an occurrence at Highland Valley (San Diego County) not included in White and Bramlet's Table 3. Of the 84 currently known occurrences, we are proposing to designate critical habitat for 31 occurrences. Of the remaining occurrences, 26 are considered to be eligible but are being proposed for exclusion, and 27 are not included because we do not have adequate information about the occurrence or the area does not contain any of the PCEs for the species. Occurrences comprised solely of translocated plants were not considered eligible occurrences because their potential for long-term survival and their contribution to the species gene pool is currently unknown. However, several translocated plants are included in this proposed designation due to their proximity to or occurrence within a naturally-occurring population.

To determine which occurrences are eligible, we also used recovery criteria from a draft recovery plan that includes this species (page 60, Bramlet and White 2004). The draft recovery plan states that *Brodiaea filifolia* should be evaluated for delisting when, among other criteria, the following occurrences have been fully protected: (1) All known occurrences in Los Angeles and San Bernardino counties, (2) at least 10 core occurrences in Orange County, (3) at least 10 core occurrences in western Riverside County, (4) at least 12 core occurrences on Camp Pendleton, and (5) at least 20 core occurrences in northwestern San Diego County, especially in the San Marcos area.

Where possible, we delineated a vegetative area of 250 m around each eligible occurrence to provide for pollinator habitat. Studies indicate that if pollinator habitat within 1,000 m of some host plants is eliminated, seed set of some plant species may be decreased by as much as 50 percent. Additional studies suggest that the degradation of pollinator habitat is likely to adversely affect the abundance of pollinator species (Jennersten 1988; Rathcke and Jules 1993). As discussed in the Background section, *Brodiaea* likely rely on Tumbling Flowers Beetles (Coleoptera) and Sweat Bees (Hymenoptera) for cross pollination (Niehasus 1971). Studies to quantify the distance that bees will fly to pollinate their host plants are limited in number, but the few that exist show that some bees will routinely fly 100 to 500 m (328 to 984 ft) to pollinate plants with some flying at least 1,000 m (3,280 ft) to pollinate flowers (Steffan-Dewenter and Tscharntke 2000). Since we do not currently have information on specific pollinator species of *Brodiaea filifolia,* we based the 250-m distance on the mean routine flight distance for bees.

These 250-m areas include suitable soils and vegetation required by *Brodiaea filifolia.* These 250-m areas include habitat where the species may be present as mature but non-flowering corms or immature corms rather than currently flowering plants. These areas provide some areas needed for gene flow, pollen dispersal, seed dispersal, germination, and maintenance of seed banks.

It is also necessary to maintain the natural hydrological and fire regimes associated with this species. However, sufficient information is not currently available to quantify the extent of the area necessary to maintain the natural fire and hydrological regimes for particular populations. Therefore, we are unable to fully incorporate these areas into our identification of essential habitat.

Whenever possible, areas not containing the primary constituent elements, such as developed areas, were not included in the boundaries of proposed critical habitat. However, we did not map critical habitat in enough detail to exclude all developed areas, or other areas unlikely to contain the primary constituent elements essential for the conservation of *Brodiaea filifolia.* Such areas within the boundaries of the mapped units, such as buildings, roads, parking lots, railroad tracks, canals, and other paved areas, are excluded from the designation by text, but these exclusions do not show on the maps because their scale is too small.

Special Management Considerations or Protections

When designating critical habitat, we assess whether the physical and biological features determined to be essential for conservation may require special management considerations or protection. We have also considered how designation highlights habitat that needs special management consideration or protection. For example, in the development of regional HCPs, critical habitat can be useful to determine which *Brodiaea filifolia* habitat should be highest priority for special management or protection. The final designation will guide the Service and applicants to ensure habitat conservation planning efforts are consistent with conservation objectives for *B. filifolia.*

Many of the known occurrences face the following common threats: direct and indirect effects from habitat fragmentation and loss resulting from urban development (and associated infrastructure projects) and agricultural activities continue to be the most significant potential threats to *Brodiaea filifolia.* Other threats include repeated mowing and disking associated with fire suppression activities and weed control, military training, alteration of existing hydrologic conditions (particularly in western Riverside County), off-road vehicle and other recreational activities, over-grazing, and competition from non-native plant species. Unsuccessful translocation efforts may also contribute to the decline of this species.

Proposed Critical Habitat Designation

We determined that approximately 9,403 ac (3,805 ha) of eligible habitat exists for *Brodiaea filifolia* in Los Angeles, San Bernardino, Orange, Riverside and San Diego Counties, California. We are proposing to designate approximately 4,690 ac (1,898 ha) of the total eligible habitat in 10 units as critical habitat in Los Angeles, San Bernardino, Orange, and San Diego Counties, California (Table 1). The 10 proposed critical habitat units encompass 3, 2, 13, and 15 eligible occurrences in Los Angeles, San Bernardino, Orange, and San Diego counties, respectively. Twelve eligible occurrences in Riverside and 13 eligible occurrences in San Diego counties covered by approved and/or pending habitat conservation plans are being proposed for exclusion from the critical habitat designation (*See* ''Exclusions Under Section 4(b)(2) of the Act'' for a detailed discussion). Areas proposed as critical habitat are under Federal, State, local, and private ownership. The species is not currently known to occur on any Tribally-owned lands within its range. Therefore, no Tribally-owned lands are being proposed for designation. Table 2 provides the approximate area of proposed critical habitat by county and land ownership.

The proposed critical habitat areas described below constitute our best assessment at this time of those areas needed for the species' conservation. Each unit or subunit contains the primary constituent elements related to an intact surface and subsurface structure essential to maintain the identified soil and vegetation types where the species is found and to support pollinator assemblages necessary to facilitate gene flow within and among populations of *B. filifolia.* Lands within each unit or subunit are also are currently occupied and within the historic range of *B. filifolia.* Table 3 provides the approximate area of eligible habitat, eligible habitat excluded from the proposed designation, and total critical habitat proposed for *B. filifolia.*

Descriptions of each proposed critical habitat unit and the reasons why they are eligible for designation are listed below. Unit descriptions also include the size of the unit, the general vegetation and soil types present in the unit, any known threats specific to the unit, and numbers of individual plants, if known. Because the species may be present as mature but non-flowering corms or immature corms rather than flowering plants, the number of individuals given should be considered an estimate of the minimum number of plants present. In several cases, lands within the unit are referred to as developed. Using aerial imagery and other information, we determined that PCEs for this species are still present within each unit, although the habitat may be somewhat degraded.

TABLE 1.—ACREAGE (ACRES (AC); HECTARES (HA)) AND COUNTY OF UNITS AND SUBUNITS PROPOSED AS CRITICAL HABITAT FOR BRODIAEA FILIFOLIA

Critical habitat unit and subunit	County	ac; ha
Unit 1: Los Angeles County	Los Angeles	294; 119
1a: Glendora		96; 39
1b: San Dimas		198; 80
Unit 2: Arrowhead Hot Springs	San Bernardino	89; 36
Unit 3: Aliso Canyon	Orange	151; 61
Unit 4: Orange County		1,860; 753
4a: Arroyo Trabuco		74; 30
4b: Casper's Regional Park		259; 105
4c: Canada Gobernadora/Chiquita Ridgeline		311; 126
4d: Prima Deschecha		119; 48
4e: Forster Ranch		96; 39
4f: Telega/Segunda Deshecha		190; 77
4g: Cristianitos Canyon		588; 238
4h: Cristianitos Canyon South		72; 29
4i: Blind Canyon		151; 61
Unit 5: Northern San Diego County	San Diego	1,527; 618
5a: Miller Mountain		1,263; 511
5b: Devil's Canyon		264; 107
Unit 6: Oceanside		198; 81
6a: Alta Creek		49; 20
6b: Mesa Drive		5; 2
6c: Oceanside East/Mission Avenue		64; 26
6d: Taylor/Darwin		80; 33
Unit 7: Carlsbad		125; 50
7a: Fox-Miller		93; 38
7b: Rancho Carillo		32; 13
Unit 8: San Marcos		315; 127
8a: Rancho Santa Fe Road North		86; 35
8b: Rancho Santalina/Loma Alta		82; 33
8c: Grand Avenue		10; 4
8d: Upham		117; 47
8e: Linda Vista		20; 8
Unit 9: Double LL Ranch		57; 23
Unit 10: Highland Valley		74; 30
Total		4,690; 1,898

TABLE 2.—AREA (ACRES (AC) AND HECTARES (HA)) INCLUDED IN PROPOSED CRITICAL HABITAT FOR BRODIAEA FILIFOLIA BY COUNTY AND LANDOWNERSHIP

County	Federal*	State or local	Private	Total
Los Angeles	20 ac; 8 ha	0 ac; 0 ac	274 ac; 111 ha	294 ac; 119 ha.
San Bernardino	0 ac; 0 ha	0 ac; 0 ha	89 ac; 36 ha	89 ac; 36 ha.
Orange	0 ac; 0 ha	219 ac; 89 ha	1,792 ac; 725 ha	2,011 ac; 814 ha.
Riverside**	47 ac; 19 ha	0 ac; 0 ha	0 ac; 0 ha	47 ac; 19 ha.
San Diego	1,239 ac; 501 ha	0 ac; 0 ha	1,010 ac; 409 ha	2,249 ac; 910 ha.
Total	1,306 ac; 529 ha	219 ac; 89 ha	3,165 ac; 1,281 ha	4,690 ac; 1,898 ha.

* Federal lands include Bureau of Land Management, DOD, National Forest, and Fish and Wildlife Service lands.
** Proposed critical habitat in Riverside County is entirely on National Forest lands.

NOTE: The proposed designation does not include any Tribally-owned lands.

TABLE 3.—TOTAL ELIGIBLE HABITAT, ELIGIBLE HABITAT EXCLUDED FROM THE PROPOSED DESIGNATION, AND TOTAL CRITICAL HABITAT PROPOSED FOR BRODIAEA FILIFOLIA IN ACRES (AC) AND HECTARES (HA)

County	Total eligible habitat	Eligible habitat excluded	Proposed critical habitat
Los Angeles	294 ac; 119 ha	0 ac 0 ha;	294 ac; 119 ha.
San Bernardino	89 ac; 36 ha	0 ac; 0 ha	89 ac; 36 ha.
Orange	2,011 ac; 814 ha	0 ac; 0 ha	2,011 ac; 814 ha.
Riverside	3,314 ac; 1,341 ha	3,267 ac; 1,322 ha	47 ac*; 19 ha.
San Diego	3,695 ac; 1,495 ha	1,446 ac; 585 ha	2,249 ac; 910 ha.
Total	9,403 ac; 3,805 ha	4,713 ac; 1,907 ha	4,690 ac; 1,898 ha.

* Proposed critical habitat in Riverside County is entirely on National Forest lands.

Unit Descriptions

Los Angeles County—There are currently three known occurrences of *Brodiaea filifolia* in Los Angeles County, each of which is proposed as critical habitat.

Unit 1: Los Angeles County Unit—This unit consists of 294 ac (119 ha) divided into 2 subunits.

Subunit 1a: Glendora. This subunit consists of 96 ac (39 ha) of private lands in the city of Glendora, in the foothills of the San Gabriel Mountains in eastern Los Angeles County. Lands within this subunit contain Cieneba-Exchequer-Sobrant soils, a type of silty loam, and consist primarily of northern mixed chaparral and coastal sage scrub. This population represents only one of two occurrences located in the foothills of the San Gabriel Mountains part of the Transverse Ranges, where the species was historically found, and represents the nearest genetic connection to the San Dimas subunit. Lands within this subunit support an occurrence of about 2,000 plants associated in part with northern mixed chaparral. This occurrence represents a peripheral location (Lesica and Allendorf 1995), being the northernmost known occurrence of the species, with populations known since 1991 [and rediscovery of population not reported since 1921] (CNDDB 2003, p. 16). The site is owned and managed by the Glendora Community Conservancy (GCC); however, we are not aware of a specific conservation or management plan protecting or managing for this species on the GCC's property. Management actions to control invasive species may be required to maintain the identified vegetation types essential to the conservation of the species since invasive species can outcompete native species for resources.

Subunit 1b: San Dimas subunit. This subunit consists of 198 ac (80 ha) of privately owned and Federal (Angeles National Forest) lands in the city of San Dimas in the foothills of the San Gabriel Mountains of eastern Los Angeles County. Lands within this subunit contain Cieneba-Exchequer-Sobrant soils, a type of silty loam, and consist primarily of coastal sage scrub and northern mixed chaparral. This is one of only two units in the foothills of the San Gabriel Mountains of the Transverse Ranges where it occurred historically and represents the only likely genetic connection to the Glendora subunit. This subunit supports two occurrences totaling about 6,000 plants and is associated with chaparral, with plants recorded since 1990 (CNDDB 2003, p. 35). While this species is not currently known to occur on the Angeles National Forest, the species occurs directly outside of the National Forest so approximately 20 ac of the national forest was included in the proposed designation to provide for pollinator habitat. This site is threatened by urban development. Therefore, management actions to minimize disturbance to the surface and subsurface structure within this subunit may be required to maintain the identified soil and vegetation types as well as pollinator habitat essential to the conservation of the species.

San Bernardino County—There are currently two known occurrences of *Brodiaea filifolia* in San Bernardino County, both of are being proposed as critical habitat.

Unit 2: Arrowhead Hot Springs Unit. This unit consists of 89 ac (36 ha) of privately owned land at the southwestern base of the San Bernardino Mountains. Lands within this unit contain Etsel family-Rock outcrop-Springdale and Tujunga-Urban land-Hanford soils, some of which are considered alluvial, and consist primarily of coastal sage scrub. This unit supports the only occurrence of this plant in the foothills of the San Bernardino Mountains of the Transverse Ranges, where it occurred historically with collections dating since the late 1800s (Niehaus 1971, CNDDB 2003 p. 5) and most recently 1000 plants observed in 1993, represents a peripheral location at the northern limits of the species range (Lesica and Allendorf 1995), and represents the type locality for the species. Lands within this unit support two occurrences, totaling about 1,000 plants, that are associated with coastal sage scrub. Occurrences in this unit are threatened by invasive exotic plants. Therefore, management actions to control invasive species may be required to maintain the identified vegetation types essential to the conservation of the species since invasive species can outcompete native species for resources.

Orange County—There are currently 23 known occurrences of *Brodiaea filifolia* in Orange County, 13 of which have been determined to have the PCEs essential to the conservation of the species and thus are being proposed as critical habitat.

Unit 3: Aliso Canyon Unit. This unit consists of 151 ac (61 ha) of publicly owned land in Aliso-Wood Canyon Regional Park, in the city of Laguna Niguel, southwestern Orange County. Lands within this unit contain clay loam or other types of loam and consist primarily of annual grassland that has been graded or disturbed. Lands within this unit support an occurrence that is associated with annual grassland and represent a peripheral location (Lesica and Allendorf 1995), being the westernmost occurrence of the species. Although this occurrence is protected from urban development as part of Aliso-Wood Regional Park, these parklands are managed for recreational use and not specifically for the conservation of *Brodiaea filifolia.* The occurrence in this unit is primarily threatened by fuel management activities (annual mowing) conducted by park staff (Julie Vanderwier, USFWS, pers. comm. 2004). Therefore, management actions to minimize disturbance to the surface structure within this unit may be required to maintain the identified vegetation types as well as pollinator habitat essential to the conservation of the species.

Unit 4: Orange County Unit—This unit consists of 1,861 ac (753 ha) divided into 9 subunits.

Subunit 4a: Arroyo Trabuco. This subunit consists of 74 ac (30 ha) of privately owned land near Rancho Mission Viejo in southern Orange County. Lands within this subunit contain clay loam or other types of loam, and consist primarily of annual grassland and coastal sage scrub. Lands within this subunit support an occurrence that represents a regionally peripheral location (Lesica and Allendorf 1995), being the westernmost occurrence of the species for the unit; and may provide gene flow to the Canada Gobernadora/Chiquita Ridgeline subunit (about 4.5 km away). Roughly half of this land appears to be under agricultural use. Therefore, management actions to minimize disturbance to the surface structure within this subunit may be required to maintain the identified vegetation types as well as pollinator habitat essential to the conservation of the species.

Subunit 4b: Casper's Regional Park. This subunit consists of 259 ac (105 ha) of privately owned and County (Casper's Regional Park) lands in the city of San Juan Capistrano, in the southwestern region of the Santa Ana Mountains, southern Orange County. Lands within this unit contain clay loam, sandy loam, or rocky outcrop, and consist primarily of sagebrush-buckwheat scrub. Lands within this support an occurrence of about 800 plants that is one of only two occurrences that occur in sagebrush-buckwheat scrub, are located in the foothills of the Santa Ana Mountains at or near the highest elevation of any of the Orange County occurrences, and represent the northernmost occurrence in Orange County as a regionally peripheral population (Lesica and Allendorf 1995). This occurrence also provides for gene flow to the south (subunit 4c, about 3.75 km away). Records of this plant date from 1989 with 24 plants to 850 plants in 1995 (CNDDB 2003 p. 51). While this occurrence is protected from urban development, being contained within Casper's Regional Park, park lands are primarily managed for recreational use and not specifically for the conservation of the species. Management actions to minimize disturbance to the surface structure within this subunit may be required to maintain the identified vegetation types as well as pollinator habitat essential to the conservation of the species.

Subunit 4c: Canada Gobernadora/Chiquita Ridgeline. This subunit consists of 311 ac (126 ha) of privately owned land near Chiquita and Gobernadora Canyons on Rancho Mission Viejo in southern Orange County. Lands within this subunit contain clay, clay loam, or sandy loam and consist primarily of dry-land croplands and sagebrush-buckwheat scrub. Lands within this subunit support two occurrences, totaling about 4,400 plants, and this subunit is one of only two subunits to include sagebrush-buckwheat scrub vegetation. Approximately 2600 plants were observed from this subunit and adjacent areas from surveys conducted in the 1990s (CNDDB 2003 p. 59). This subunit is central to Orange County populations and may provide for gene flow to surrounding populations in Unit 4 (Casper's Regional Park subunit is about 3.75 km away, and the Arroyo Trabuco subunit is about 4.5 km away). Occurrences in this subunit are threatened by urban development. Therefore, management actions to minimize disturbance to the surface and subsurface structure within this subunit may be required to maintain the identified soil and vegetation types as well as pollinator habitat essential to the conservation of the species.

Subunit 4d: Prima Deschecha. This subunit consists of 119 ac (48 ha) of privately owned land northeast of San Clemente in western Orange County. Lands within this subunit contain clay soils and consist primarily of annual grassland. Lands within this subunit support an occurrence that may provide gene flow north to the Canada Gobernadora/Chiquita Ridgeline subunit (about 4.5 km away) and south to the Forster Ranch subunit (about 1.75 km away). Occurrences in this subunit are threatened by urban development. Management actions to minimize disturbance to the surface and subsurface structure within this subunit may be required to maintain the identified soil and vegetation types as well as pollinator habitat essential to the conservation of the species.

Subunit 4e: Forster Ranch. This subunit consists of 96 ac (39 ha) of privately owned land northeast of San Clemente in southwestern Orange County. Lands within this subunit contain clay and clay-loam soils and consist primarily of annual grassland. Lands within this subunit support an occurrence that may provide gene flow north to the Prima Deschecha subunit (about 1.75 km away) as well as to populations on MCB Camp Pendleton. Occurrences in this subunit are threatened by urban development. Management actions to minimize disturbance to the surface and subsurface structure within this subunit may be required to maintain the identified soil and vegetation types as well as pollinator habitat essential to the conservation of the species.

Subunit 4f: Telega/Segunda Deshecha. This subunit consists of 190 ac (77 ha) of privately owned land northeast of San Clemente in southwestern Orange County. Lands within this subunit contain clay soils and support needlegrass grassland. Lands within this subunit support an occurrence that may provide gene flow east to the Cristianitos Canyon subunit (about 1.25 km away) and to populations on MCB Camp Pendleton. Occurrences in this subunit are threatened by urban development. Management actions to minimize disturbance to the surface and subsurface structure within this subunit may be required to maintain the identified soil and vegetation types as well as pollinator habitat essential to the conservation of the species.

Subunit 4g: Cristianitos Canyon. This subunit consists of 588 ac (238 ha) of privately owned land in Cristianitos Canyon on Rancho Mission Viejo in southern Orange County. Lands within this subunit are underlain by clay and sandy loam soils and consist primarily of annual grassland and needlegrass grassland. Lands within this subunit support 3 occurrences, totaling about 3,000 plants, as well as several smaller occurrences and may provide for gene flow to surrounding occurrences such as Telega/Segunda Deshecha (about 1.25 km away) and those on MCB Camp Pendleton in San Diego County. Approximately 2600 plants were observed from this subunit and adjacent areas from surveys conducted in the 1990s (CNDDB 2003 p.57). Occurrences in this subunit are threatened by development of the Foothill Transportation Corridor. Management actions to minimize disturbance to the surface and subsurface structure within this subunit may be required to maintain the identified soil and vegetation types as well as pollinator habitat essential to the conservation of the species.

Subunit 4h: Cristianitos Canyon South. This subunit consists of 72 ac (29 ha) of privately owned land in Cristianitos Canyon on Rancho Mission Viejo in southern Orange County. Lands within this subunit contain clay, clay-loam, and loam soils that support annual grassland. Lands within this subunit support an occurrence that may provide gene flow to occurrences in Orange (such as Telega/Segunda Deshecha and Cristianitos Canyon that are about 1.75 km away) and San Diego Counties. Approximately 2600 plants

were observed from this subunit and adjacent areas from surveys conducted in the 1990s (CNDDB 2003 p. 58). Occurrences in this subunit are threatened by urban development. Management actions to minimize disturbance to the surface and subsurface structure within this subunit may be required to maintain the identified soil and vegetation types as well as pollinator habitat essential to the conservation of the species.

Subunit 4i: Blind Canyon. This subunit consists of 151 ac (61 ha) of privately owned land on Rancho Mission Viejo near the border between Orange and San Diego counties. Lands within this subunit contain clay loam and sandy loam soils and consist primarily of annual grassland and coastal sage scrub. Lands within this subunit support an occurrence that may provide gene flow between occurrences in Orange County (about 2 km away from the Cristianitos Canyon subunit) and on MCB Camp Pendleton (about 1.5 km away). Occurrences in this subunit are threatened by urban development. Therefore, management actions to minimize disturbance to the surface and subsurface structure within this subunit may be required to maintain the identified soil and vegetation types as well as pollinator habitat essential to the conservation of the species.

San Diego County—There are currently 44 known occurrences of *Brodiaea filifolia* in San Diego County, 15 of which have been determined to be eligible for designation and thus are being proposed as critical habitat.

Unit 5: Northern San Diego Unit—This unit consists of 1,527 ac (618 ha) divided into 2 subunits.

Subunit 5a: Miller Mountain. This subunit consists of 1,263 ac (511 ha) of private and publicly-owned (Cleveland National Forest) lands in northern San Diego County near the border with Riverside County. About 47 acres of Cleveland National Forest lands in this subunit lie within Riverside County. The majority of the vegetation in this subunit is valley and foothill grassland and northern mixed and chamise chaparrals. This occurrence may provide gene flow north and south into Riverside and San Diego Counties (about 3.5 km away from the closest unit, excluded, in Riverside County, and about 1.5 km away from the Devil's Canyon subunit). Lands within this subunit support an occurrence of about 20,000 plants as well as some plants thought to be intermediate between *Brodiaea filifolia* and *B. orcuttii.* This population is also historically recorded as a type locality from the late 1800s (Niehaus 1971), with surveys from 1992 of about 20,000 plants (CNDDB 2003 pp. 32 and 33). The Cleveland National Forest does not currently have a management plan specific to *Brodiaea filifolia,* however, timing of cattle grazing has been adjusted to avoid the flowering period for the species (Kirsten Winter, Forest Botanist, 2004 pers. comm.). Management actions to minimize disturbance to the surface structure within this subunit and to control invasive species may be required to maintain the identified vegetation types as well as pollinator habitat essential to the conservation of the species.

Subunit 5b: Devil's Canyon. This subunit consists of 264 ac (107 ha). It occurs on private and publicly-owned (Cleveland National Forest) lands in northeastern San Diego County. The majority of the vegetation in this subunit is chaparral. Lands within this subunit support an occurrence that may provide gene flow to occurrences in Riverside County via the Miller Mountain subunit (about 1.5 km away). This population is also historically recorded as a type locality from the late 1800s (Niehaus 1971) with surveys from 1992 of several thousand plants (CNDDB 2003 p. 34). The Cleveland National Forest does not currently have a management plan specific to *Brodiaea filifolia,* however, timing of cattle grazing has been adjusted to avoid the flowering period for the species (Kirsten Winter, Forest Botanist (2004 pers. comm.). Management actions to minimize disturbance to the surface structure within this subunit and to control invasive species may be required to maintain the identified vegetation types as well as pollinator habitat essential to the conservation of the species.

Unit 6: Oceanside Unit—This unit consists of 199 ac (81 ha) divided into 4 subunits.

Subunit 6a: Alta Creek. This subunit consists of 49 ac (20 ha) of private land in northern coastal San Diego County. Lands within this subunit contain fine sandy loam, loam, or loamy fine sand and consist primarily of coastal sage scrub. Lands within this subunit support an occurrence that may provide gene flow to occurrences in the Mesa Drive subunit (about 1 km away), and in Calavera Heights (about 3 km away) as well as other occurrences along coastal San Diego County. The occurrences in this subunit are threatened by urban development. Therefore, management actions to minimize disturbance to the surface and subsurface structure within this subunit may be required to maintain the identified soil and vegetation types as well as pollinator habitat essential to the conservation of the species.

Subunit 6b: Mesa Drive. This subunit consists of 5 ac (2 ha) of privately owned land in the city of Oceanside, northern coastal San Diego County. Lands within this subunit contain loamy fine sands and consists primarily of extant areas of grassland. This subunit supports an occurrence and provides potential gene flow to occurrences in Calavera Heights via Alta Creek (about 1 km away). The occurrence in this subunit is threatened by urban development. Therefore, management actions to minimize disturbance to the surface and subsurface structure within this subunit may be required to maintain the identified soil and vegetation types as well as pollinator habitat essential to the conservation of the species.

Subunit 6c: Oceanside East/Mission Avenue. This subunit consists of 91 ac (37 ha) of privately owned land in the city of Oceanside, northwestern San Diego County. Lands within this subunit contain fine loamy sands and consist primarily of coastal sage scrub with some disturbed areas. Lands within this subunit support an occurrence that may provide gene flow to occurrences in coastal San Diego County (the Mesa Drive subunit is about 2.5 km away). Occurrences in this subunit are threatened by urban development. Therefore, management actions to minimize disturbance to the surface and subsurface structure within this subunit may be required to maintain the identified soil and vegetation types as well as pollinator habitat essential to the conservation of the species.

Subunit 6d: Taylor/Darwin subunit. This subunit consists of 80 ac (33 ha) of privately owned land in the city of Oceanside, northwestern San Diego County. The majority of the subunit is undeveloped, but is immediately surrounded by urban development. However, areas of extant valley and foothill grasslands exist in the surrounding area Most of the soils present in this subunit are clay or loamy fine sand. Lands within this subunit support a regionally peripheral population (Lesica and Allendorf 1995), and an occurrence that may provide gene flow to the Oceanside East/Mission Avenue subunit (about 3.5 km away). Occurrences in this subunit are threatened by encroaching urban development. Therefore, management actions to minimize disturbance to the surface and subsurface structure within this subunit may be required to maintain the identified soil and vegetation types as well as pollinator

habitat essential to the conservation of the species.

Unit 7: Carlsbad—This unit consists of 125 ac (50 ha) divided into 2 subunits.

Subunit 7a: Fox-Miller. This subunit consists of 93 ac (38 ha) of privately owned land in the city of Carlsbad, northwestern San Diego County. Lands within this subunit contain heavy clay soils and consist primarily of non-native grassland. Lands within this subunit support an occurrence of about 19,000 plants that may provide gene flow to surrounding occurrences (this unit is about 1.5 km west of a protected unit, and thereby excluded). This occurrence is threatened by urban development. Therefore, management actions to minimize disturbance to the surface and subsurface structure within this subunit may be required to maintain the identified soil and vegetation types as well as pollinator habitat essential to the conservation of the species. Though this unit occurs in the City of Carlsbad subarea of the Multiple Habitat Conservation Program (MHCP) Plan, we are proposing to designate this unit for the reasons provided below in ''Relationship of Critical Habitat to the City of Carlsbad Draft Habitat Management Plan—Exclusion under 4(b)(2).''

Subunit 7b: Rancho Carillo. This subunit consists of 32 ac (13 ha) of private land in San Diego County. Lands within this subunit contain clay or sandy loam soils and consist primarily of non-native grasslands and coastal sage scrub. Records of this plant date from 1991 with more than 100 plants to estimates of 300 to 24,000 plants, most as non-flowering corms (CNDDB 2003 p. 18). Lands within this subunit support an occurrence that may provide gene flow to nearby occurrences to the northeast (nearest occurrence about 1.5 km away) and occurrences in the Rancho Santa Fe Road North unit (less than 0.5 km away). Occurrences in this subunit are threatened by road realignment and urban development. Therefore, management actions to minimize disturbance to the surface and subsurface structure within this subunit may be required to maintain the identified soil and vegetation types as well as pollinator habitat essential to the conservation of the species.

Unit 8: San Marcos—This unit consists of 315 ac (127 ha) divided into 5 subunits.

Subunit 8a: Rancho Santa Fe Road North. This subunit consists of 86 ac (35 ha) of private land in San Diego County. Lands within this subunit contain clay or sandy loam soils and consist primarily of non-native grasslands and coastal sage scrub. Lands within this subunit support an occurrence that may provide gene flow to the northeast (about 1.5 km away from a protected unit, thereby excluded). This subunit is also immediately east of the Rancho Carillo subunit. Occurrences in this subunit are threatened by road realignment and urban development. Therefore, management actions to minimize disturbance to the surface and subsurface structure within this subunit may be required to maintain the identified soil and vegetation types as well as pollinator habitat essential to the conservation of the species.

Subunit 8b: Rancho Santalina/Loma Alta. This subunit consists of 82 ac (33 ha) of privately owned land in the city of San Marcos, northern San Diego County. The majority of the vegetation in the subunit is developed, however, there are areas of valley and foothill grassland and coastal sage scrub. Most of the soils in this subunit are clay, loam, or loamy fine sand. Lands within this subunit support an occurrence of about 6,000 plants, may provide gene flow to nearby occurrences (about 0.5 km from the Grand Avenue subunit), and represent a peripheral location (Lesica and Allendorf 1995), being the easternmost known occurrence of the species. Portions of this subunit have been lost as the result of urban development and some of the remaining habitat is in narrow linear areas and subject to considerable edge effects such as persistent proximity to sources of invasive exotic plants and trampling by humans and their pets. The occurrence is threatened by OHV use, invasive non-native plants, and disking. Therefore, management actions to minimize disturbance to the surface and subsurface structure and control invasive species within this subunit may be required to maintain the identified soil and vegetation types as well as pollinator habitat essential to the conservation of the species.

Subunit 8c: Grand Avenue. This subunit consists of 10 ac (4 ha) of privately owned land in the city of San Marcos, northern San Diego County. The majority of the subunit is undeveloped, but is immediately surrounded by urban development. However, areas of extant valley and foothill grasslands exist in the surrounding area. Most of the soils in the subunit are loamy fine sand. Lands within this subunit support an occurrence that may provide gene flow to surrounding occurrences (about 0.5 km from the Rancho Santalina/Loma Alta and Upham subunits). Records of this plant date from 1993 (CNDDB 2003 p. 31). Occurrences in this subunit are threatened by urban development. Therefore, management actions to minimize disturbance to the surface and subsurface structure within this subunit may be required to maintain the identified soil and vegetation types as well as pollinator habitat essential to the conservation of the species.

Subunit 8d: Upham. This subunit consists of 117 ac (47 ha) of privately owned land in the city of San Marcos, northern San Diego County. The majority of the subunit is undeveloped, but is immediately surrounded by urban development. However, areas of extant valley and foothill grasslands exist in the surrounding area. Records of this plant date from 1978, with about 1000 or more plants seen in 1986 and 1995 (CNDDB 2003 p. 7). Lands within this subunit support an occurrence that may provide gene flow to surrounding occurrences (about 0.5 km from the Grand Avenue and Linda Vista subunits). Occurrences in this subunit are threatened by urban development. Therefore, management actions to minimize disturbance to the surface and subsurface structure within this subunit may be required to maintain the identified soil and vegetation types as well as pollinator habitat essential to the conservation of the species.

Subunit 8e: Linda Vista. This subunit consists of 20 ac (8 ha) of privately owned land in the city of San Marcos, northern San Diego County. Much of the subunit is undeveloped; but is immediately surrounded by urban development. However, areas of extant valley and foothill grasslands exist in the surrounding area. Lands within this subunit support an occurrence that may provide gene flow to surrounding occurrences in northern San Diego County, such as the Upham subunit (about 0.5 km away). Records of this plant date from 1991 (CNDDB 2003 p. 30). This subunit is threatened by OHV activity, encroaching urban development, and trash dumping. Therefore, management actions to minimize disturbance to the surface and subsurface structure within this subunit may be required to maintain the identified soil and vegetation types as well as pollinator habitat essential to the conservation of the species.

Unit 9: Double LL Ranch Unit—This unit consists of 57 ac (23 ha) of privately owned land in the city of Encinitas, northwestern San Diego County. Much of the unit is undeveloped; but is immediately surrounded by urban development. However, areas of extant valley and foothill grasslands exist in the surrounding area. Most of the soils present in this unit are heavy clays. Lands within this subunit support a

regionally peripheral population (Lesica and Allendorf 1995). This unit is threatened by urban development and the indirect effects of activities associated with the road that bisects the unit. Therefore, management actions to minimize disturbance to the surface and subsurface structure within this unit may be required to maintain the identified soil and vegetation types as well as pollinator habitat essential to the conservation of the species.

Unit 10: Highland Valley Unit—This unit consists of 74 ac (30 ha) of privately owned land east of the community of Ramona in northeastern San Diego County. Lands within this unit contain clay or sandy loam soils and consist primarily of non-native grassland or alkali seep. Lands within this subunit support an occurrence that represents the only known occurrence in San Diego County that is on alkali soils and because it is a peripheral location (Lesica and Allendorf 1995), being the easternmost locality for the species. Populations in this unit are threatened by urban development and agricultural activities. Therefore, management actions to minimize disturbance to the surface and subsurface structure within this unit may be required to maintain the identified soil and vegetation types as well as pollinator habitat essential to the conservation of the species.

Effects of Critical Habitat Designation

Section 7 Consultation

Section 7 of the Act requires Federal agencies, including the Service, to ensure that actions they fund, authorize, or carry out are not likely to destroy or adversely modify critical habitat. In response to recent court decisions invalidating our regulatory definition of adverse modification under 402.2, we are not relying on that definition in this discussion of critical habitat effects. Instead in evaluating whether destruction or adverse modification of critical habitat would occur, we rely on the statutory definition of critical habitat quoted earlier in this rule. We must analyze whether, if a proposed Federal agency action were implemented, critical habitat would remain functional to serve its intended conservation role for the species.

Section 7(a) of the Act requires Federal agencies, including the Service, to evaluate their actions with respect to any species that is proposed or listed as endangered or threatened and with respect to its critical habitat, if any is proposed or designated. Regulations implementing this interagency cooperation provision of the Act are codified at 50 CFR part 402. Section 7(a)(4) of the Act requires Federal agencies to confer with us on any action that is likely to jeopardize the continued existence of a proposed species or result in destruction or adverse modification of proposed critical habitat. Conference reports provide conservation recommendations to assist the agency in eliminating conflicts that may be caused by the proposed action. The conservation recommendations in a conference report are advisory. If a species is listed or critical habitat is designated, section 7(a)(2) requires Federal agencies to ensure that activities they authorize, fund, or carry out are not likely to jeopardize the continued existence of such a species or to destroy or adversely modify its critical habitat. If a Federal action may affect a listed species or its critical habitat, the responsible Federal agency (action agency) must enter into consultation with us. Through this consultation, the action agency ensures that the permitted actions do not jeopardize the continued existence of the species or destroy or adversely modify critical habitat.

When we issue a biological opinion concluding that a project is likely to result in the destruction or adverse modification of critical habitat, we also provide reasonable and prudent alternatives to the project, if any are identifiable. ''Reasonable and prudent alternatives'' are defined at 50 CFR 402.02 as alternative actions identified during consultation that can be implemented in a manner consistent with the intended purpose of the action, that are consistent with the scope of the Federal agency's legal authority and jurisdiction, that are economically and technologically feasible, and that the Director believes would avoid destruction or adverse modification of critical habitat. Reasonable and prudent alternatives can vary from slight project modifications to extensive redesign or relocation of the project. Costs associated with implementing a reasonable and prudent alternative are similarly variable.

Regulations at 50 CFR 402.16 require Federal agencies to reinitiate consultation on previously reviewed actions in instances where critical habitat is subsequently designated and the Federal agency has retained discretionary involvement or control over the action or such discretionary involvement or control is authorized by law.

Consequently, some Federal agencies may request re-initiation of consultation or conference with us on actions for which formal consultation has been completed, if those actions may affect designated critical habitat or adversely modify or destroy proposed critical habitat.

We may issue a formal conference report if requested by a Federal agency. Formal conference reports on proposed critical habitat contain an opinion that is prepared according to 50 CFR 402.14, as if critical habitat were designated. We may adopt the formal conference report as the biological opinion when the critical habitat is designated, if no substantial new information or changes in the action alter the content of the opinion (see 50 CFR 402.10(d)).

Activities on Federal lands that may affect *Brodiaea filifolia* or its critical habitat will require section 7 consultation. Activities on private or State lands requiring a permit from a Federal agency, such as a permit from the Army Corps under section 404 of the Clean Water Act, a section 10(a)(1)(B) permit from the Service, or some other Federal action, including funding (*e.g.*, Federal Highway Administration or Federal Emergency Management Agency funding), will also continue to be subject to the section 7 consultation process. Federal actions not affecting listed species or critical habitat and actions on non-Federal and private lands that are not federally funded, authorized, or permitted do not require section 7 consultation.

Section 4(b)(8) of the Act requires us to briefly evaluate and describe in any proposed or final regulation that designates critical habitat those activities involving a Federal action that may destroy or adversely modify such habitat, or that may be affected by such designation. Activities that may destroy or adversely modify critical habitat include those that would impair the functionality of the primary constituent elements within a critical habitat unit to serve their intended conservation role for the species. We note that such activities may also jeopardize the continued existence of the species.

To properly portray the effects of critical habitat designation, we must first compare the section 7 requirements for actions that may affect critical habitat with the requirements for actions that may affect a listed species. Section 7 prohibits actions funded, authorized, or carried out by Federal agencies from jeopardizing the continued existence of a listed species or destroying or adversely modifying the listed species' critical habitat.

Activities involving a Federal action that may destroy or adversely modify critical habitat, or may be affected by the critical habitat designation include, but are not limited to:

(1) Removing, thinning, or destroying *Brodiaea filifolia* habitat (as defined in

the primary constituent elements discussion), whether by burning, mechanical, chemical, or other means (*e.g.*, plowing, grubbing, grading, grazing, woodcutting, construction, road building, mining, mechanical weed control, herbicide application, *etc.*);

(2) Activities that appreciably degrade or destroy *Brodiaea filifolia* habitat (and its primary constituent elements) include, but are not limited to, livestock grazing, clearing, disking, farming, residential or commercial development, introducing or encouraging the spread of nonnative species, off-road vehicle use, and heavy recreational use;

(3) Activities that appreciably diminish habitat value or quality through indirect effects (*e.g.*, edge effects, invasion of exotic plants or animals, or fragmentation);

(4) Any activity, including the regulation of activities by the Corps of Engineers under section 404 of the Clean Water Act or activities carried out by or licensed by the Environmental Protection Agency (EPA), that could alter watershed or soil characteristics in ways that would appreciably alter or reduce the quality or quantity of surface and subsurface flow of water needed to maintain *Brodiaea filifolia* habitat (these activities include, but are not limited to, altering the natural fire regime either through fire suppression or by using prescribed fires that are too frequent or poorly-timed; development, including road building and other direct or indirect activities; agricultural activities, livestock grazing, and vegetation manipulation such as clearing or grubbing in the watershed upslope from *Brodiaea filifolia*);

(5) Road construction and maintenance, right-of-way designation, and regulation of agricultural activities, or any activity funded or carried out by the Department of Transportation or Department of Agriculture that could result in excavation, or mechanized land clearing of *Brodiaea filifolia* habitat; and

(6) Licensing of construction of communication sites by the Federal Communications Commission or funding of construction or development activities by the U.S. Department of Housing and Urban Development that could result in excavation, or mechanized land clearing of *Brodiaea filifolia* habitat.

The 10 proposed critical habitat units are within the geographical area occupied by the species and have the PCEs essential for the conservation of *Brodiaea filifolia.* Additionally, all habitats within this designation are likely to be used by the pollinators for the species. Federal agencies already consult with us on activities in areas currently occupied by the species or if the species may be affected by the action, to ensure that their actions do not jeopardize the continued existence of the species.

Exclusions Under Section 4(b)(2) of the Act

Section 4(b)(2) of the Act states that critical habitat shall be designated, and revised, on the basis of the best available scientific data after taking into consideration the economic impact, national security impact, and any other relevant impact of specifying any particular area as critical habitat. An area may be excluded from critical habitat if it is determined that the benefits of exclusion outweigh the benefits of specifying a particular area as critical habitat, unless the failure to designate such area as critical habitat will result in the extinction of the species.

In our critical habitat designations, we have used the provisions outlined in section 4(b)(2) of the Act to evaluate lands eligible for designation for possible exclusion from proposed critical habitat. Lands that we have either excluded from or not included in critical habitat based on that provision include those covered by: (1) Legally operative HCPs that cover the species and provide assurances that the conservation measures for the species will be implemented and effective; (2) draft HCPs that cover the species, have undergone public review and comment, and provide assurances that the conservation measures for the species will be implemented and effective (*i.e.*, pending HCPs); (3) Tribal conservation plans that cover the species and provide assurances that the conservation measures for the species will be implemented and effective; (4) State conservation plans that provide assurances that the conservation measures for the species will be implemented and effective; and (5) Service National Wildlife Refuge System Comprehensive Conservation Plans that provide assurances that the conservation measures for the species will be implemented and effective. A summary of the exclusions proposed in this rule follow in Table 4.

TABLE 4.—APPROXIMATE ELIGIBLE HABITAT, EXCLUDED ELIGIBLE HABITAT, AND PROPOSED CRITICAL HABITAT (ACRES (AC); HECTARES (HA)) FOR BRODIAEA FILIFOLIA

Total eligible habitat identified for *Brodiaea filifolia*	9,403 ac; 3,805 ha.
Eligible habitat excluded from the proposed critical habitat designation pursuant to section 4(b)(2) of the Act	
Western Riverside County Multiple Species Habitat Conservation Plan (Riverside County)	3,267 ac; 1,322 ha.
City of Carlsbad Draft Habitat Management Plan (San Diego County)	321 ac; 130 ha.
Villages of La Costa Habitat Conservation Plan (San Diego County)	208 ac; 84 ha.
"Mission-essential" Department of Defense lands (Marine Corps Base (MCB), Camp Pendleton, San Diego County)	917 ac; 371 ha.
Total eligible habitat excluded from proposed critical habitat	4,713 ac; 1,907 ha.
Total eligible habitat proposed as critical habitat	4,690 ac; 1,898 ha.

Relationship of Critical Habitat to Approved Habitat Conservation Plans

As described above, section 4(b)(2) of the Act requires us to consider other relevant impacts, in addition to economic and national security impacts, when designating critical habitat. Some areas occupied by *Brodiaea filifolia* involve complex HCPs that address multiple species, cover large areas, and have many participating permittees. Many of the large regional HCPs in southern California have been, or are being, developed to provide for the voluntary and cooperative conservation of numerous federally listed species and rare species and their habitat. Over time, areas in the planning area are addressed per the HCP, and key areas are acquired, managed, and monitored. These HCPs are designed to implement conservation actions to address future projects that are anticipated to occur within the planning area of the HCP, and to reduce delays in the permitting process.

Approved regional HCPs (*e.g.*, those sponsored by cities, counties or other local jurisdictions) where *Brodiaea filifolia* is addressed provide for the protection and management of habitat that contains the PCE's essential to the conservation of the species while shifting development to non-essential areas. Regional HCP development processes provide an intensive data

collection and analysis regarding habitat of *B. filifolia.* The process also enables us to develop a reserve system that provides for the biological needs and long-term conservation of the species (Schwartz 1999).

Completed HCPs and their accompanying Implementing Agreements (IA) contain management measures and protections for identified preserve areas that protect, restore, and enhance the value of these lands as habitat for *Brodiaea filifolia.* These measures include explicit standards to minimize impacts to the addressed species and its habitat. In general, HCPs are designed to ensure that the value of the conservation lands are maintained, expanded, and improved for the species that they cover.

Brodiaea filifolia is covered under the approved Western Riverside Multiple Species Habitat Conservation Plan, the approved Villages of La Costa Habitat Conservation Plan, and the City of Carlsbad Draft Habitat Management Plan. We have determined that the benefits of excluding eligible habitat areas within these pending and legally operative HCPs from the proposed critical habitat designations will outweigh the benefits of including them.

Relationship of Critical Habitat to the Western Riverside Multiple Species Habitat Conservation Plan (MSHCP)—Exclusion Under 4(b)(2)

Areas of eligible habitat for *Brodiaea filifolia* in the Western Riverside County Management Area occur within the Western Riverside MSHCP area, and have been proposed for exclusion from proposed critical habitat pursuant to section 4(b)(2) of the Act. The Western Riverside MSHCP was developed over a period of eight years and was approved and permitted on June 22, 2004. Participants in this HCP include 14 cities, the County of Riverside (including the Riverside County Flood Control and Water Conservation Agency, Riverside County Transportation Commission, Riverside County Parks and Open Space District, and Riverside County Waste Department), the California Department of Parks and Recreation, and the California Department of Transportation. The Western Riverside MSHCP is a subregional plan under the State's Natural Community Conservation Plans (NCCP) and was developed in cooperation with the California Department of Fish and Game.

The MSHCP establishes a multi-species conservation program to minimize and mitigate the expected loss of habitat values of ''covered species'' and, with regard to covered animal species, their incidental take. The intent of the MSHCP is to provide avoidance, minimization, and mitigation measures for the impacts of proposed activities on covered species and their habitats. Within the 1,260,000 ac (510,000 ha) Plan Area of the MSHCP, approximately 153,000 ac (62,000 ha) of diverse habitats are to be conserved. The proposed conservation of 153,000 ac (62,000 ha) will complement other existing natural and open space areas (*e.g.*, State Parks, Forest Service, and County Park Lands). The MSHCP identifies the following species-specific conservation goals that will be implemented for the long-term conservation of *Brodiaea filifolia:* (1) To include within the MSHCP conservation area at least 6,900 ac out of an estimated 11,482 ac of suitable habitat; (2) to include within the MSHCP conservation area at least 11 major locations supporting *B. filifolia;* (3) to conduct surveys for the species in certain areas of suitable habitat until the conservation goals are met; and (4) to maintain floodplain processes along the San Jacinto River.

Relationship of Critical Habitat to the City of Carlsbad Draft Habitat Management Plan—Exclusion Under 4(b)(2)

Lands within the boundaries of the City of Carlsbad draft Habitat Management Plan (HMP) that contain eligible habitat for *B. filifolia* have been considered but are not proposed as critical habitat. The Carlsbad HMP, a draft subarea plan under the draft Multiple Habitat Conservation Plan (MHCP), is part of a large-scale habitat conservation planning effort in northwestern San Diego County. The draft MHCP includes the participation of the cities of Carlsbad, Encinitas, Escondido, Oceanside, San Marcos, Solana Beach and Vista. The draft MHCP is also being proposed as a subregional plan under the State's NCCP and is being developed in cooperation with CDFG. The plan area encompasses approximately 111,908 ac (45,288 ha). Each of the cities participating in the MHCP is preparing an individual subarea plan that would authorize the issuance of an incidental take permit for those species specifically identified for coverage with a particular city's subarea plan.

The City of Carlsbad has prepared a draft subarea HMP for the MHCP. Within the boundaries of the draft HMP, five eligible populations of *B. filifolia* are currently known to occur (Calavera Heights, Lake Calavera, Fox-Miller, Carlsbad Oaks North, Poinsettia). All known populations of *B. filifolia* that occur within the boundaries of the draft HMP, with one exception, are inside planned preserve areas. The draft HMP anticipates *B. filifolia* will be fully covered under the plan, with the exception of the population known to occur on the Fox-Miller site (Unit 7a), described below. For the fully covered populations of *B. filifolia,* the draft HMP identifies the species as a narrow endemic and provides for the conservation of 100 percent of those populations of *B. filifolia* that occur within the boundaries of the proposed preserve areas. All populations of *B. filifolia,* with the exception of the Fox-Miller population, are included in the proposed preserve areas of the draft HMP. Additionally, the draft HMP includes provisions to manage the populations within the preserve areas in order to provide for the long-term conservation of the species.

For the Fox-Miller site, the draft HMP would only include the plant as a conditionally covered species. The proposed hardline on Fox-Miller will not meet the conditions for coverage of the species due to the recent identification of 19,100 plants on the property. Modification of this hardline would need to occur for coverage of brodiaea filifolia. Thus, development that would adversely affect this species could not be permitted under Carlsbad's HMP until such coverage is received by the City. The Service and CA Department of Fish and Game will work with the City of Carlsbad and the landowner to address the conservation of this plant on that property. If the conditions to achieve this conservation are met, we may consider excluding this area from critical habitat in the final rule.

Substantial progress has been made on the City of Carlsbad's subarea HMP. On June 4, 2004, we published a Notice of Availability of a Draft Environmental Impact Statement/Report (EIS/EIR) and Receipt of and Application for an Incidental Take Permit in the **Federal Register** regarding the MHCP and the City of Carlsbad's draft subarea HMP (69 FR 31632). Public comment on these documents was accepted until July 6, 2004. The City of Carlsbad also modified their subarea HMP by addendum in order to receive a Federal consistency determination from the California Coastal Commission.

Although the draft subarea HMP for the City of Carlsbad is not yet approved and implemented, the circulation of the final EIS/EIR, solicitation of public review and comment, and initiation of the intra-Service section 7 consultation for those species, including the

Brodiaea filifolia, identified for coverage with the draft plan, demonstrates significant sustained progress in the development of this habitat conservation planning effort.

We are excluding eligible habitat for *B. filifolia* at Calavera Heights, Lake Calavera, Carlsbad Oaks North, and Poinsettia from proposed critical habitat designation pursuant to section 4(b)(2) of the Act. The population of *B. filifolia* identified as the Fox-Miller site (Unit 7) is being proposed as critical habitat.

Relationship of Critical Habitat to the Villages of La Costa Habitat Conservation Plan—Exclusion Under 4(b)(2)

The Fieldstone/La Costa project is on 1,955 acres at two locations within the City of Carlsbad. The project is a housing development with limited commercial use, a school, park, and various roadways. All of the *Brodiaea filifolia* on-site occurred in the Northwest parcel and was estimated to consist of 7,000 individuals. The project was permitted to directly impact 1,190 individuals (17 percent) due to development. As part of the HCP and section 10(a)(1)(B) permit issuance, the following conservation measures were required and have been implemented for the long-term conservation of *Brodiaea filifolia:* (1) Permanent protection of approximately 5,800 individuals (83 percent) in a 702.5-ac natural open space preserve configured to provide connectivity to other significant areas of natural habitat; (2) long-term management of conserved habitat; (3) monitoring; (4) habitat restoration and enhancement; (5) control of invasive plant species; (6) implementation of a fire management program; (7) access control measures; and (8) public education. Open space areas on Villages of La Costa lands are actively managed to maintain and enhance biological values by the Center for Natural Lands Management (Don Rideout, City of Carlsbad, pers. comm. 2004).

Other Regional Natural Community Conservation Plans and HCPs

There are other regional NCCP/HCP efforts under way in southern California that have not yet been completed but which, upon approval, will provide conservation benefits to *Brodiaea filifolia.* Lands within these HCPs are not excluded from consideration for proposed critical habitat. However, management plans and/or habitat conservation plans that provide for conservation of the species in areas being proposed as critical habitat submitted to and approved by the Service prior to the end of the public comment period for this proposed rule will be evaluated for exclusion from the final designation.

The Multiple Habitat Conservation Program (MHCP) in northwestern San Diego County encompasses approximately 112,000 ac (45,324 ha). The cities of Oceanside, Escondido, San Marcos, Vista, Carlsbad, Encinitas, and Solana Beach are involved in the development and implementation of this multiple species HCP/NCCP. As discussed above, the City of Carlsbad's Habitat Management Plan (HMP) is their subarea plan to the MHCP and has been proceeding ahead of the other cities in MHCP. The HMPs for the other participating cities are in various stages of development.

The proposed Southern Subregion NCCP/HCP in Orange County encompasses approximately 128,000 ac (51,799 ha) in its planning area. Jurisdictions and private landowners within the study area include the cities of Rancho Santa Margarita, Mission Viejo, San Juan Capistrano, San Clemente, and Rancho Mission Viejo. *B. filifolia* is being proposed as one of the species covered under this plan, but because this plan is still in review the lands in this plan have not been excluded. The preliminary draft of this plan conveys the importance of conservation of at least 75 percent of all the known *B. filifolia* occurrences (and an estimated 96 percent of documented flowering scapes) within the plan area (NCCP/SAMP Working Group 2003).

North County Subarea of the MSCP comprises approximately 14,045 ha (34,705 ac) within the unincorporated areas of San Diego. Currently, there is only one known occurrence of *Brodiaea filifolia* in this planning area, and this population is included in proposed critical habitat. The North County MSCP Subarea Plan is in the preliminary stages. Draft Plans have not been created, and the California Environmental Quality Act documents have not been drafted. However, a group of independent science advisors reviewed the process for incorporating the best available science in the North County Subarea Plan (NCSAP). Based on meetings and a review of the Independent Science Advisors (ISA) Report (ISA 2002), the County created a Revised NCSAP Preserve Planning Process Report. In addition, public scoping meetings have been held and a draft Subarea Plan Working Draft map of the planning area with draft Pre-Approved Mitigation Areas have been identified.

(1) Benefits of Inclusion

The principal effect of designated critical habitat is that federally funded or authorized activities within critical habitat may require consultation under section 7 of the Act. Consultation ensures that action entities avoid adverse modification of critical habitat. Currently approved and permitted HCPs and NCCP/HCPs ensure the long-term survival of addressed species. HCPs or NCCP/HCPs and IAs (implementing agreements) include management measures and protections for conservation lands designed to protect, restore, and enhance their value as habitat for covered species and thus provide benefits to the species well in excess of those that would result from a critical habitat designation.

Another benefit of including these lands is that the designation of critical habitat can serve to educate landowners and the public regarding the potential conservation value of an area. This may focus and contribute to conservation efforts by other parties by clearly delineating areas of high conservation value for certain species.

(2) Benefits of Exclusion

The benefits of excluding lands within HCPs from critical habitat designation include relieving landowners, communities, and counties that have voluntarily adopted an HCP of the additional regulatory burden that might be imposed by critical habitat. Many HCPs become the basis for regional conservation plans consistent with the recovery objectives for listed species covered within the plan area. Many of these HCPs provide conservation benefits to unlisted, rare species. Imposing additional regulatory review after an HCP is completed solely as a result of the designation of critical habitat may undermine conservation efforts and partnerships in many areas. In fact, it could result in the loss of species' benefits if participants abandon the voluntary HCP process because it may result in an additional regulatory burden requiring more of them than of other parties who have not voluntarily participated in species conservation. Designation of critical habitat within the boundaries of approved HCPs is likely to be viewed as a disincentive to those entities currently developing HCPs or contemplating them in the future.

A related benefit of excluding lands within HCPs from critical habitat designation is the continued ability by the Service to seek new partnerships. These may include future HCP participants, such as States, counties, local jurisdictions, conservation

organizations, and private landowners. These entities together may implement conservation actions that we would be unable to accomplish otherwise.

An HCP or NCCP/HCP application must undergo section 7 consultation. While this consultation does not address adverse modification to critical habitat, it will determine if the HCP jeopardizes the species in the plan area. Federal actions not covered by the HCP, but in areas occupied by listed species, still require consultation under section 7 of the Act. HCPs and NCCP/HCPs typically provide greater conservation benefits to an addressed listed species than section 7 consultations because, under the specific requirements for an HCP contained in section 10 of the Act, HCPs and NCCP/HCPs assure the long-term protection and management of a covered species and its habitat, and funding for such management through the standards found in the 5 Point Policy for HCPs (64 FR 35242). Section 7 is limited to requiring that the specific action being consulted upon does not jeopardize the continued existence of the species or destroy or adversely modify critical habitat.

(3) Benefits of Exclusion Outweigh the Benefits of Inclusion

The Western Riverside MSHCP, the Carlsbad HMP, and the Villages of La Costa HCP include *Brodiaea filifolia* as a covered species. HCPs and NCCP/HCPs provide protection for *B. filifolia* and its associated habitat. The educational benefits of critical habitat, including informing the public of areas that are essential for the long-term survival and conservation of the species, is still accomplished from material provided on our website and through public notice and comment procedures required to establish an HCP or NCCP/HCP. We have also received input from the public through the public participation that occurs in the development of many regional HCPs or NCCP/HCPs. For these reasons, we believe that proposing critical habitat has little additional benefit in areas covered by HCPs, provided that the HCP or NCCP/HCP specifically and adequately covers the species for which critical habitat is being proposed. We do not believe that this exclusion would result in the extinction of the species because the eligible habitat within these HCPs will be conserved, and we have already consulted on these HCPs under section 7 of the Act.

Relationship of Marine Corps Base Camp Pendleton to Proposed Critical Habitat

The Sikes Act Improvements Act of 1997 (Sikes Act) requires each military installation that includes land and water suitable for the conservation and management of natural resources to complete, by November 17, 2001, an Integrated Natural Resources Management Plan (INRMP). An INRMP integrates implementation of the military mission of the installation with stewardship of the natural resources found there. INRMPs include an assessment of the ecological needs on the installation, including needs to provide for the conservation of listed species; a statement of goals and priorities; a description of management actions to be implemented to provide for these ecological needs; a monitoring plan, and an adaptive management plan.

Section 318 of the National Defense Authorization Act for Fiscal Year 2004 (Public Law No. 108–136) amended the Endangered Species Act to address the relationship of INRMPs to critical habitat by adding a new section 4(a)(3)(B). This provision prohibits the Service from designating as critical habitat any lands or other geographical areas owned or controlled by the Department of Defense, or designated for its use, that are subject to an INRMP prepared under section 101 of the Sikes Act (16 U.S.C. 670a), if the Secretary of the Interior determines in writing that such plan provides a benefit to the species for which critical habitat is proposed for designation.

Camp Pendleton has completed an INRMP that provides a framework for managing natural resources. As part of the process of developing their INRMP, on March 30, 2000, a formal consultation was initiated between the Marine Corps and the Fish and Wildlife Service regarding their activities on upland areas of Camp Pendleton. The consultation that addresses the upland habitat of *Brodiaea filifolia* and other species is not yet complete. We are currently working cooperatively with Camp Pendleton to facilitate the completion of this consultation. Thus, the INRMP currently does not provide a benefit to listed species, including *Brodiaea filifolia*, contained within these habitats on the base. As such, we are unable to use the INRMP for Camp Pendleton as a basis for not including lands essential to the conservation of *Brodiaea filifolia* in proposed critical habitat pursuant to section 4(a)(3)(B) of the Act. If, however the consultation that addresses upland habitat and species is finalized prior to the time we finalize the designation for *Brodiaea filifolia,* we may not include areas essential to the conservation of *Brodiaea filifolia* on Camp Pendleton in the final designation under the authority of 4(a)(3)(B).

Exclusion Under 4(b)(2)

Section 4(b)(2) of the Act requires that the Secretary of the Interior shall designate or revise critical habitat based upon the best scientific and commercial data available, after taking into consideration the economic impact, impact to national security and any other relevant impact of specifying any particular area as critical habitat. The Secretary may exclude any area from critical habitat if it is determined that the benefit of such exclusion outweighs the benefits of specifying such area as part of the critical habitat, unless the failure to designate such area as critical habitat will result in the extinction of the species concerned.

We have considered the effect of a critical habitat designation on national security and have determined that the benefits of exclusion outweigh the benefits of inclusion. We are, therefore, not proposing critical habitat on ''mission-essential'' training areas on Camp Pendleton. In this proposal we refer to areas designated as training areas on maps created by MCB, Camp Pendleton as ''mission-essential'' training areas. Camp Pendleton has identified its training areas as ''mission-essential'' to the Marine Corps' ability to train Marines and Sailors for combat, and which is discussed in the ''Benefits of Exclusion'' below.

To continue its critical training missions pending completion of the consultation covering upland habitats and species discussed above, the Marine Corps has implemented measures to avoid jeopardy of *Brodiaea filifolia* and other listed species within the uplands area. In particular, the Marine Corps is implementing a set of ''programmatic instructions'' to avoid adverse effects to *B. filifolia.*

(1) Benefits of Inclusion

The primary benefit of proposing critical habitat is to identify lands within occupied areas that contain the PCEs essential to the conservation of the species or within unoccupied area are essential to the conservation of the species. If critical habitat were to be designated in these areas they would require consultation to ensure activities would not adversely modify critical habitat or jeopardize the continued existence of the species. We are in formal consultation with the Marine Corps on upland activities to ensure

current and proposed actions will not jeopardize the species' continued existence, and the Marine Corps routinely consults with the Service for activities on Camp Pendelton that may affect federally listed species to ensure such species are not jeopardized. On March 30, 2000, at the request of the Marine Corps, the Service initiated consultation regarding activities on approximately 125,000 ac (50,500 ha) of land on Camp Pendelton and their effects on numerous federally listed species, including the brodiaea. Although this programmatic consultation has not yet been completed, the Marine Corps has implemented a set of ''programmatic instructions'' to minimize adverse effects to the brodiaea. The benefits associated with designating critical habitat on mission-essential training areas and on lands within Camp Pendelton would be minimal because these areas are already encompassed in the ongoing programmatic consultation. Designation of critical habitat may provide education benefits by informing land managers of areas essential to the conservation of the brodiaea. In the case of Camp Pendelton there is no appreciable educational benefit because the installation has already demonstrated its knowledge and understanding of essential habitat for the species through the ongoing programmatic consultation and implementation of ''programmatic instructions.''

(2) Benefits of Exclusion

The Marine Corps Base, Camp Pendleton (MCB, Camp Pendleton) is an amphibious training base that promotes combat readiness for military forces and is the only Marine Corps facility on the West Coast where amphibious operations can be combined with air, sea, and ground assault training activities year-round. If eligible habitat that occurs within ''mission-essential'' training areas is proposed as critical habitat, the Marine Corps would be required to determine if activities would adversely modify or destroy proposed critical habitat. If such a determination was made, the Marine Corps would be compelled to conference with us pursuant to the requirements of section 7 of the Act. Furthermore, if proposed critical habitat within training areas is included in a final designation, designation of critical habitat in mission-essential training areas would trigger a requirement for the Marine Corps to consult on activities that may affect designated critical habitat and to reinitiate consultation on activities for which a consultation may have already been completed that assessed the effects to a federally listed species on MCB, Camp Pendleton. If ''may affect'' determinations were made, the Marine Corps would be further obligated to initiate or reinitiate consultations with us. In a similar proposed designation for the California coastal gnatcatcher and San Diego fairy shrimp, the Marine Corps warned that the requirement to undertake additional conferencing and/or consultations or revisiting already completed consultations specifically to address the effects of activities on designated critical habitat could delay or impair the Marine Corps' ability to train Marines and Sailors for combat in support of continuous, global deployment to the western Pacific and southwest Asia (Department of the Navy; June 23, 2003 letter). Thus, the Service has determined it is appropriate to exclude approximately 917 ac (371 ha) of land within MCB, Camp Pendleton from this proposed designation of critical habitat.

(3) Benefits of Exclusion Outweigh the Benefits of Inclusion

Based on the impact to national security and the Marine Corps' need to maintain a high level of military readiness and combat capability, the Service determined that the benefits of excluding mission-essential training areas within MCB, Camp Pendleton from critical habitat outweigh the benefits of including them in such proposed designation. The Service, in conducting this analysis pursuant to section 4(b)(2) of the Act, determined that the exclusion of these lands from proposed critical habitat will not result in the extinction of the brodiaea because the Marine Corps has implemented measures to avoid jeopardy of the *Brodiaea filifolia* and other listed species in the uplands area. Although these lands are not included in designated proposed critical habitat, the Marine Corps will still be required to consult with the Service on activities that may affect the brodiaea, to ensure such activities do not jeopardize the continued existence of the species. Additionally, management guidelines for all upland areas are expected to be developed and incorporated into future revisions of MCB, Camp Pendleton's INRMP upon completion of the programmatic consultation on upland areas. Maps delineating habitat for *B. filifolia,* overlaid with ''mission-essential'' training areas on MCB, Camp Pendleton, are available for public review and comment at the Carlsbad Fish and Wildlife Office (see **ADDRESSES** section) or on the Internet at *http://carlsbad.fws.gov.* These maps are provided to allow the public the opportunity to adequately comment on these exclusions.

Economic Analysis

An analysis of the economic impacts of proposing critical habitat for *Brodiaea filifolia* is being prepared. We will announce the availability of the draft economic analysis in the **Federal Register** as soon as it is completed, at which time we will seek public review and comment. At that time, copies of the draft economic analysis will be available for downloading from the Internet at *http://carlsbad.fws.gov,* or by contacting the Field Supervisor, Carlsbad Fish and Wildlife Office directly (see **ADDRESSES** section).

Peer Review

In accordance with our policy published on July 1, 1994, (59 FR 34270), we will solicit the expert opinions of at least three appropriate and independent specialists regarding this proposed rule. The purpose of such review is to ensure that our critical habitat designation is based on scientifically sound data, assumptions, and analyses. We will send these peer reviewers copies of this proposed rule immediately following publication in the **Federal Register**. We will invite these peer reviewers to comment on the specific assumptions and conclusions regarding the proposed designation of critical habitat.

We will consider all comments and information received during the comment period on this proposed rule during the preparation of a final rulemaking. Accordingly, the final designation may differ from this proposal.

Public Hearings

The Act provides for one or more public hearings on this proposal, if requested. Requests for public hearings must be made in writing at least 15 days prior to the close of the public comment period. We will schedule public hearings on this proposal, if any are requested, and announce the dates, times, and places of those hearings in the local newspapers at least 15 days prior to the first hearing.

Clarity of the Rule

Executive Order 12866 requires each agency to write regulations and notices that are easy to understand. We invite your comments on how to make this proposed rule easier to understand, including answers to the following: (1) Are the requirements in the proposed rule clearly stated? (2) Does the proposed rule contain technical jargon

that interferes with the clarity? (3) Does the format of the proposed rule (grouping and order of the sections, use of headings, paragraphing, etc.) aid or reduce its clarity? (4) Is the description of the notice in the **SUPPLEMENTARY INFORMATION** section of the preamble helpful in understanding the proposed rule? (5) What else could we do to make this proposed rule easier to understand?

Send a copy of any comments on how we could make this proposed rule easier to understand to: Office of Regulatory Affairs, Department of the Interior, room 7229, 1849 C Street, NW., Washington, DC 20240. You may e-mail your comments to this address: *Exsec@ios.doi.gov.*

Required Determinations

Regulatory Planning and Review

This document has been reviewed by the Office of Management and Budget (OMB), in accordance with Executive Order 12866. OMB makes the final determination under Executive Order 12866. We are preparing a draft economic analysis of this proposed action, which will be available for public comment, to determine the economic consequences of designating the specific areas as critical habitat. Within these areas, the types of Federal actions or authorized activities that we have identified as potential concerns are listed above in the section on Section 7 Consultation.

The availability of the draft economic analysis will be announced in the **Federal Register** and in local newspapers so that it is available for public review and comments.

Regulatory Flexibility Act (5 U.S.C. 601 et seq.)

Under the Regulatory Flexibility Act (5 U.S.C. 601 *et seq.*, as amended by the Small Business Regulatory Enforcement Fairness Act (SBREFA) of 1996), whenever an agency is required to publish a notice of rulemaking for any proposed or final rule, it must prepare and make available for public comment a regulatory flexibility analysis that describes the effects of the rule on small entities (*i.e.*, small businesses, small organizations, and small government jurisdictions). However, no regulatory flexibility analysis is required if the head of the agency certifies the rule will not have a significant economic impact on a substantial number of small entities. The SBREFA amended the Regulatory Flexibility Act (RFA) to require Federal agencies to provide a statement of the factual basis for certifying that the rule will not have a significant economic impact on a substantial number of small entities.

At this time, the Service lacks the available economic information necessary to provide an adequate factual basis for the required RFA finding. Therefore, the RFA finding is deferred until completion of the draft economic analysis prepared pursuant to section 4(b)(2) of the ESA and E.O. 12866. This draft economic analysis will provide the required factual basis for the RFA finding. Upon completion of the draft economic analysis, the Service will publish a notice of availability of the draft economic analysis of the proposed designation and reopen the public comment period for the proposed designation. The Service will include with the notice of availability, as appropriate, an initial regulatory flexibility analysis or a certification that the rule will not have a significant economic impact on a substantial number of small entities accompanied by the factual basis for that determination. The Service has concluded that deferring the RFA finding until completion of the draft economic analysis is necessary to meet the purposes and requirements of the RFA. Deferring the RFA finding in this manner will ensure that the Service makes a sufficiently informed determination based on adequate economic information and provides the necessary opportunity for public comment.

Executive Order 13211

On May 18, 2001, the President issued an Executive Order (E.O. 13211) on regulations that significantly affect energy supply, distribution, and use. Executive Order 13211 requires agencies to prepare Statements of Energy Effects when undertaking certain actions. This proposed rule to designate critical habitat for *Brodiaea filifolia* is not anticipated to be a significant regulatory action under Executive Order 12866, and it is not expected to significantly affect energy supplies, distribution, or use because there are no distribution facilities, power grid stations, etc. within the boundaries of proposed critical habitat. However, two pipelines cross portions of subunits 4f, Telega/Segunda Deschecha, and 8d, Upham. Since the areas supporting the pipelines are considered developed areas that do not contain the primary constituent elements for this species and are excluded from the designation by text, we do not believe that activities limited to these areas supporting the pipelines would be affected by the designation. Therefore, we do not anticipate that this action is not a significant energy action and no Statement of Energy Effects is required. We will, however, further evaluate this issue as we conduct our economic analysis and, as appropriate, review and revise this assessment as warranted.

Unfunded Mandates Reform Act (2 U.S.C. 1501 et seq.)

In accordance with the Unfunded Mandates Reform Act (2 U.S.C. 1501), the Service makes the following findings:

(a) This rule will not produce a Federal mandate. In general, a Federal mandate is a provision in legislation, statute or regulation that would impose an enforceable duty upon State, local, tribal governments, or the private sector and includes both ''Federal intergovernmental mandates'' and ''Federal private sector mandates.'' These terms are defined in 2 U.S.C. 658(5)–(7). ''Federal intergovernmental mandate'' includes a regulation that ''would impose an enforceable duty upon State, local, or tribal governments'' with two exceptions. It excludes ''a condition of federal assistance.'' It also excludes ''a duty arising from participation in a voluntary Federal program,'' unless the regulation ''relates to a then-existing Federal program under which $500,000,000 or more is provided annually to State, local, and tribal governments under entitlement authority,'' if the provision would ''increase the stringency of conditions of assistance'' or ''place caps upon, or otherwise decrease, the Federal Government's responsibility to provide funding'' and the State, local, or tribal governments ''lack authority'' to adjust accordingly. (At the time of enactment, these entitlement programs were: Medicaid; AFDC work programs; Child Nutrition; Food Stamps; Social Services Block Grants; Vocational Rehabilitation State Grants; Foster Care, Adoption Assistance, and Independent Living; Family Support Welfare Services; and Child Support Enforcement.) ''Federal private sector mandate'' includes a regulation that ''would impose an enforceable duty upon the private sector, except (i) a condition of Federal assistance; or (ii) a duty arising from participation in a voluntary Federal program.''

The designation of critical habitat does not impose a legally binding duty on non-Federal government entities or private parties. Under the Act, the only regulatory effect is that Federal agencies must ensure that their actions do not destroy or adversely modify critical habitat under section 7. While non-Federal entities who receive Federal funding, assistance, permits or

otherwise require approval or authorization from a Federal agency for an action may be indirectly impacted by the designation of critical habitat, the legally binding duty to avoid destruction or adverse modification of critical habitat rests squarely on the Federal agency. Furthermore, to the extent that non-Federal entities are indirectly impacted because they receive Federal assistance or participate in a voluntary Federal aid program, the Unfunded Mandates Reform Act would not apply; neither would critical habitat shift the costs of the large entitlement programs listed above on to State governments.

(b) We do not believe that this rule will significantly or uniquely affect small governments. The term ''small governmental jurisdiction'' means governments of cities, counties, towns, townships, villages, school districts, or special districts with a population of less than 50,000 (U.S.C. title 5, part I, chapter 6, section 601[5]). The lands being proposed for designation as critical habitat for *Brodiaea filifolia* are owned by Federal, State, and local government entities. None of these government entities fits the definition of ''small governmental jurisdiction.'' As such, a Small Government Agency Plan is not required. We will, however, further evaluate this issue as we conduct our economic analysis and revise this assessment if appropriate.

Federalism

In accordance with Executive Order 13132, this rule does not have significant Federalism effects and, therefore, a Federalism assessment is not required. In keeping with Department of the Interior policies, we requested information from, and coordinated the development of this proposed critical habitat designation with appropriate State resource agencies in California. We anticipate that the proposed designation of critical habitat in the areas currently occupied by *Brodiaea filifoli* a will imposes no additional significant restrictions beyond those currently in place and, therefore, should have has little incremental impact on State and local governments and their activities. However, we will re-evaluate this assessment after conducting our economic analysis for the species and for the final designation.

The proposed designation of critical habitat may have some benefit to the State and local resource agencies in that the areas and features essential to the conservation of this species are more clearly defined, and the primary constituent elements of the habitat necessary to the conservation of this species are specifically identified. While this definition and identification does not alter where and what federally sponsored activities may occur, it may assist local governments in long-range planning (rather than waiting for case-by-case section 7 consultations to occur).

Civil Justice Reform

In accordance with Executive Order 12988, the Department of the Interior's Office of the Solicitor has determined that this rule does not unduly burden the judicial system and does meet the requirements of sections 3(a) and 3(b)(2) of the Order. We are proposing to designate critical habitat in accordance with provisions of the Endangered Species Act. The rule uses standard property descriptions and identifies the primary constituent elements within the designated areas to assist the public in understanding the habitat needs of *Brodiaea filifolia.*

Paperwork Reduction Act of 1995 (44 U.S.C. 3501 et seq.)

This proposed rule does not contain new or revised information collection for which OMB approval is required under the Paperwork Reduction Act. Information collections associated with certain Act permits are covered by an existing OMB approval and are assigned clearance No. 1018–0094. This includes Forms 3–200–55 and 3–200–56, with an expiration date of July 31, 2004. This rule will not impose record keeping or reporting requirements on State or local governments, individuals, businesses, or organizations. An agency may not conduct or sponsor, and a person is not required to respond to, a collection of information unless it displays a currently valid OMB control number.

National Environmental Policy Act

It is our position that, outside the Tenth Circuit, we do not need to prepare environmental analyses as defined by the NEPA in connection with designating critical habitat under the Endangered Species Act of 1973, as amended. We published a notice outlining our reasons for this determination in the **Federal Register** on October 25, 1983 (48 FR 49244). This assertion was upheld in the courts of the Ninth Circuit (*Douglas County* v. *Babbitt,* 48 F.3d 1495 (9th Cir. Ore. 1995), cert. denied 116 S. Ct. 698 (1996)).

Government-to-Government Relationship With Tribes

In accordance with the President's memorandum of April 29, 1994, ''Government-to-Government Relations with Native American Tribal Governments'' (59 FR 22951), Executive Order 13175, and the Department of the Interior's manual at 512 DM 2, we readily acknowledge our responsibility to communicate meaningfully with recognized Federal Tribes on a government-to-government basis. We have determined that there are no tribal lands eligible for the conservation of *Brodiaea filifolia.* Therefore, critical habitat has not been proposed for designation on Tribal lands.

References Cited

A complete list of all references cited herein is available, upon request, from the Field Supervisor, Carlsbad Field Office (see **ADDRESSES** section).

Author

This rule was prepared by staff at the Carlsbad Field Office (see **ADDRESSES** section).

List of Subjects in 50 CFR Part 17

Endangered and threatened species, Exports, Imports, Reporting and recordkeeping requirements, Transportation.

Proposed Regulation Promulgation

Accordingly, the Service hereby proposes to amend part 17, subchapter B of chapter I, title 50 of the Code of Federal Regulations, as set forth below:

PART 17—[AMENDED]

1. The authority citation for part 17 continues to read as follows:

Authority: 16 U.S.C. 1361–1407; 16 U.S.C. 1531–1544; 16 U.S.C. 4201–4245; Pub. L. 99–625, 100 Stat. 3500; unless otherwise noted.

2. In § 17.12(h), revise the entry in the table for ''*Brodiaea filifolia*'' under ''FLOWERING PLANTS,'' to read as follows:

§ 17.12 Endangered and threatened plants.

* * * * *

(h) * * *

Species		Historic range	Family	Status	When listed	Critical habitat	Special rules
Scientific name	Common name						
FLOWERING PLANTS							
*	*	*	*	*	*		*
Brodiaea filifolia	Thread-leaved brodiaea.	U.S.A. (CA)	Liliaceae—-Lily	T	650	17.96(a)	NA
*	*	*	*	*	*		*

3. In § 17.96(a), add critical habitat for *Brodiaea filifolia*, in alphabetical order under Family Liliaceae to read as follows:

§ 17.96 Critical habitat—plants.

(a) Flowering plants.

* * * * *

Family Liliaceae: Brodiaea filifolia (Thread-leaved brodiaea)

(1) Critical habitat units are depicted for *Brodiaea filifolia* on the maps below.

(2) The primary constituent elements of critical habitat for *Brodiaea filifolia* consist of the following:

(i) Appropriate soil series and associated vegetation at suitable elevations of either:

(A) Clay soil series of various origins (*e.g.*, Alo, Altamont, Auld, Diablo), clay lenses found as unmapped inclusions in other soil series, or within loamy soils underlain by a clay subsoil (*e.g.*, Fallbrook, Huerhuero, Las Flores) that generally occur on mesas and gentle to moderate slopes, or in association with vernal pools, between the elevations of 100 ft (30 m) and 2,500 ft (765 m) and support open native or non-native grassland communities, open coastal sage scrub or coastal sage scrub-chaparral communities; or

(B) Silty loam soil series underlain by a clay subsoil or caliche that are generally poorly drained, moderately to strongly alkaline, granitic in origin (*e.g.*, Domino, Grangeville, Waukena, Willows), that generally occur in low-lying areas and floodplains, often in association with vernal pool or playa complexes, between the elevations of 600 ft (180 m) and 1,800 ft (550 m) and support native, non-native, or alkali grassland or scrub communities; or

(C) Clay loam soil series (*e.g.*, Murrieta) underlain by heavy clay loams or clays derived from olivine basalt lava flows, that generally occur on mesas and gentle to moderate slopes between the elevations of 1,700 ft (520 m) and 2,500 ft (765 m) and support native or non-native grassland or oak woodland savannah communities associated with basalt vernal pools; or

(D) Sandy loam soils derived from basalt and granodiorite parent materials, deposits of gravel, cobble, and boulders, or hydrologically-fractured weathered granite in intermittent streams and seeps that support open riparian and freshwater marsh communities associated with intermittent drainages, floodplains, and seeps generally between 1,800 ft (550 m) and 2,500 ft (765 m).

(ii) Areas with an intact surface and subsurface structure not permanently altered by anthropogenic land use activities (*e.g.*, deep, repetitive disking; grading). These features as well as associated physical processes (*e.g.*, full sunlight exposure) are essential to maintain those substrate and vegetation types where *Brodiaea filifolia* is found and to support pollinator assemblages necessary to facilitate gene flow within and among populations of *B. filifolia*.

(iii) Critical habitat does not include existing features and structures, such as open water, buildings, roads, aqueducts, railroads, airport runways and buildings, other paved areas, lawns, and other urban landscaped areas not containing one or more of the primary constituent elements.

(3) Index map of critical habitat units for Brodiaea filifolia (Thread-leaved brodiaea) follows:

BILLING CODE 4310–55–P

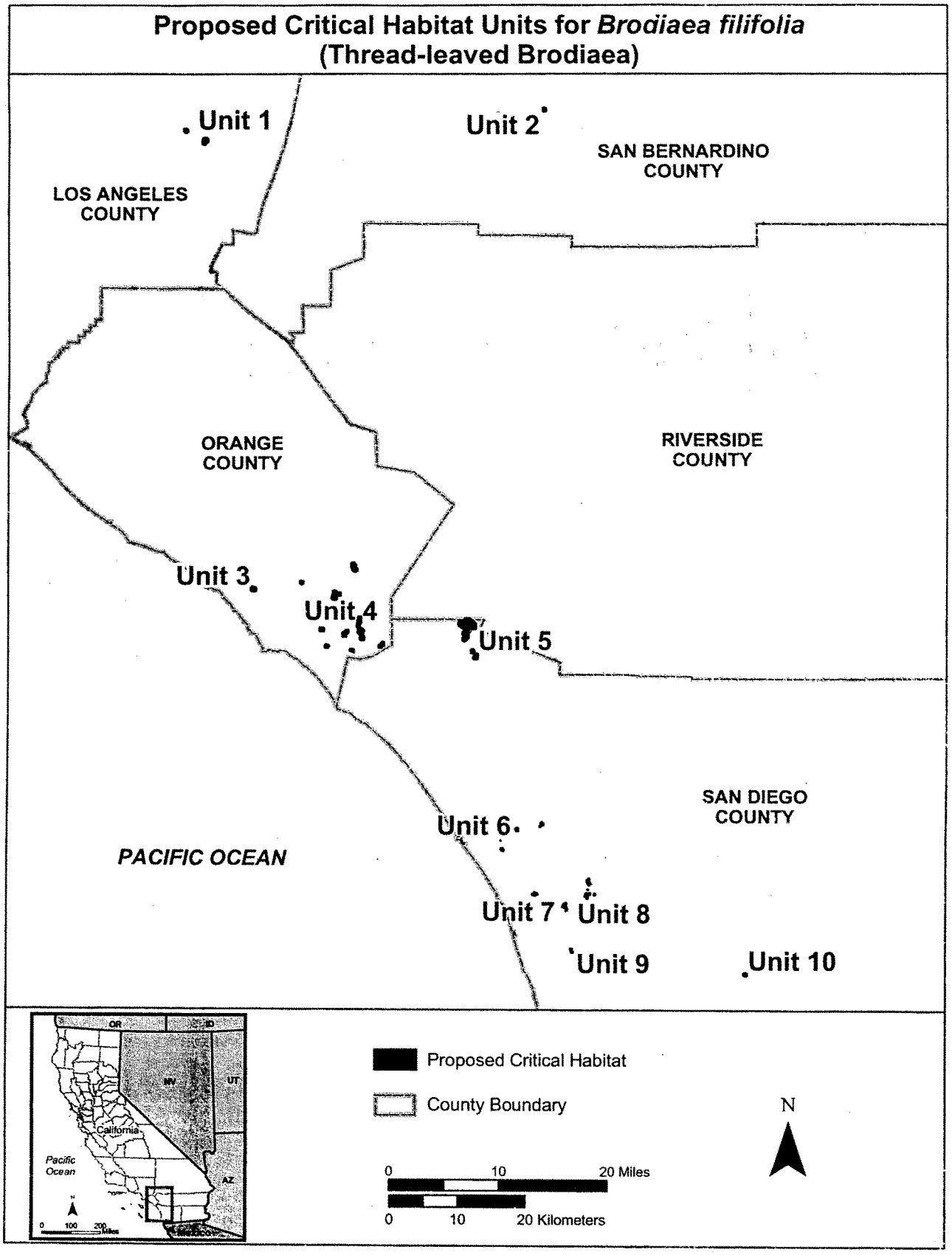

BILLING CODE 4310–55–C

(4) All map units are in the Universal Transverse Mercator (UTM) coordinate system, North American Datum of 1927 (NAD27) projection.

Map Unit 1: Los Angeles County, California, from USGS 1:24,000 quadrangle map Glendora, California.

(i) Subunit 1a: Glendora; land bounded by the following UTM coordinates (E, N): 422400, 3779900; 422400, 3779800; 422500, 3779800; 422500, 3779700; 422600, 3779700; 422600, 3779300; 422400, 3779300; 422400, 3779200; 422100, 3779200; 422100, 3779300; 422000, 3779300; 422000, 3779500; 421900, 3779500; 421900, 3779800; 422000, 3779800; 422000, 3779900; returning to 422400, 3779900.

(ii) Subunit 1b: San Dimas; land bounded by the following UTM coordinates (E, N): 425300, 3778600; 425300, 3778500; 425400, 3778500; 425400, 3778400; 425500, 3778400; 425500, 3777900; 425400, 3777900; 425400, 3777800; 425300, 3777800; 425300, 3777700; 425200, 3777700; 425200, 3777500; 424700, 3777500; 424700, 3777600; 424600, 3777600; 424600, 3778200; 424700, 3778200; 424700, 3778500; 424900, 3778500; 424900, 3778600; returning to 425300, 3778600.

(iii) Map of proposed critical habitat unit 1a, 1b for *Brodiaea filifolia* (Thread-leaved brodiaea) follows:

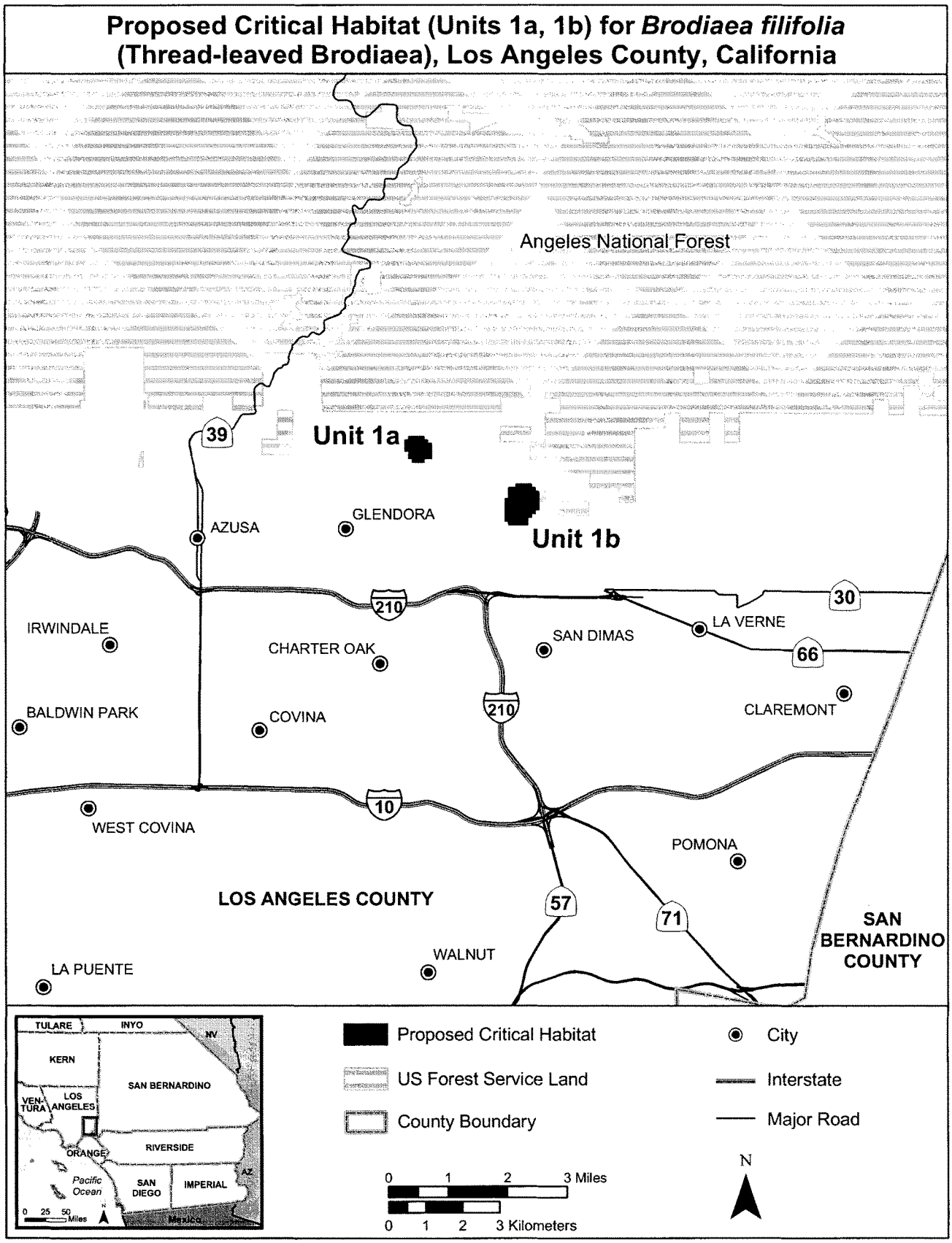
Proposed Critical Habitat (Units 1a, 1b) for *Brodiaea filifolia* (Thread-leaved Brodiaea), Los Angeles County, California
Angeles National Forest
Unit 1a
Unit 1b
39
AZUSA
GLENDORA
210
30
IRWINDALE
CHARTER OAK
SAN DIMAS
LA VERNE
66
BALDWIN PARK
COVINA
210
CLAREMONT
10
WEST COVINA
POMONA
LOS ANGELES COUNTY
57
71
SAN BERNARDINO COUNTY
WALNUT
LA PUENTE
TULARE
INYO
NV
KERN
SAN BERNARDINO
VEN-TURA
LOS ANGELES
ORANGE
RIVERSIDE
Pacific Ocean
SAN DIEGO
IMPERIAL
AZ
Mexico
0 25 50 Miles
Proposed Critical Habitat
US Forest Service Land
County Boundary
City
Interstate
Major Road
0 1 2 3 Miles
0 1 2 3 Kilometers
N

(5)(i) Map Unit 2: Arrowhead Hot Springs, San Bernardino County, California. From USGS 1:24,000 quadrangle map San Bernardino North, California, land bounded by the following UTM coordinates (E, N): 475400, 3783000; 475400, 3782800; 475500, 3782800; 475500, 3782500; 475400, 3782500; 475400, 3782400; 475300, 3782400; 475300, 3782300; 475000, 3782300; 475000, 3782400; 474900, 3782400; 474900, 3783000; returning to 475400, 3783000.

(ii) Map of proposed critical habitat unit 2 for *Brodiaea filifolia* (Thread-leaved brodiaea) follows:

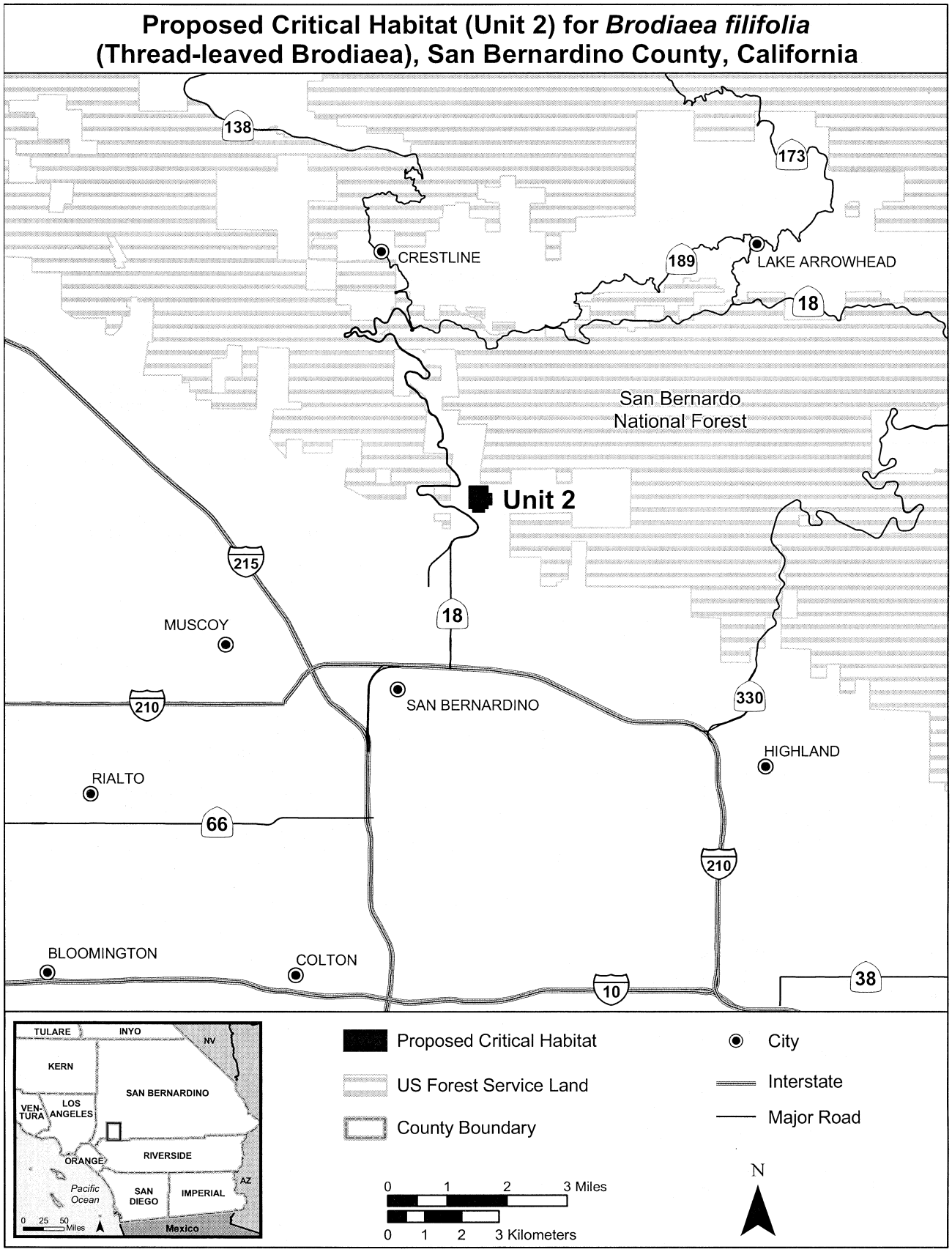

BILLING CODE 4310–55–C

(6) Map Unit 3: Aliso Canyon, Orange County, California. From USGS 1:24,000 quadrangle map San Juan Capistrano, California, land bounded by the following UTM coordinates (E, N): 432200, 3712100; 432200, 3712000; 432500, 3712000; 432500, 3711900; 432600, 3711900; 432600, 3711800; 432700, 3711800; 432700, 3711400; 432600, 3711400; 432600, 3711300; 432400, 3711300; 432400, 3711200; 432200, 3711200; 432200, 3711300; 431900, 3711300; 431900, 3711400; 431800, 3711400; 431800, 3711900; 431900, 3711900; 431900, 3712000; 432000, 3712000; 432000, 3712100; returning to 432200, 3712100.

(7) Map Unit 4: Orange County, California, from USGS 1:24,000 quadrangle maps San Juan Capistrano, Canada Gobernadora, and San Clemente, California.

(i) Subunit 4a: Arroyo Trabuco; land bounded by the following UTM coordinates (E, N): 439600, 3712900; 439600, 3712800; 439700, 3712800; 439700, 3712500; 439600, 3712500; 439600, 3712400; 439500, 3712400; 439500, 3712300; 439300, 3712300; 439300, 3712400; 439100, 3712400; 439100, 3712900; returning to 439600, 3712900.

(ii) Subunit 4b: Casper's Regional Park; land bounded by the following UTM coordinates (E, N): 447200, 3715700; 447200, 3715600; 447300, 3715600; 447300, 3715500; 447400, 3715500; 447400, 3715400; 447500, 3715400; 447500, 3714900; 447600, 3714900; 447600, 3714800; 447700, 3714800; 447700, 3714400; 447600, 3714400; 447600, 3714300; 447500, 3714300; 447500, 3714200; 447200, 3714200; 447200, 3714300; 447000, 3714300; 447000, 3714500; 446900, 3714500; 446900, 3714700; 446800, 3714700; 446800, 3714900; 446700, 3714900; 446700, 3715600; 446900, 3715600; 446900, 3715700; returning to 447200, 3715700.

(iii) Subunit 4c: Canada Gobernadora/Chiquita Ridgeline; land bounded by the following UTM coordinates (E, N): 444600, 3711000; 444500, 3711000; 444500, 3710600; 444600, 3710600; 444600, 3710400; 444700, 3710400; 444700, 3710200; 444600, 3710200; 444600, 3710100; 444500, 3710100; 444500, 3710000; 444200, 3710000; 444200, 3710100; 443900, 3710100; 443900, 3710200; 443800, 3710200; 443800, 3710600; 443900, 3710600; 443900, 3710900; 444000, 3710900; 444000, 3711400; 444100, 3711400; 444100, 3711500; 444500, 3711500; 444500, 3711400; 444600, 3711400; returning to 444600, 3711000; and land bounded by 444600, 3711000; 444700, 3711000; 444700, 3711100; 444800, 3711100; 444800, 3711200; 445100, 3711200; 445100, 3711100; 445200, 3711100; 445200, 3710600; 444700, 3710600; 444700, 3710700; 444600, 3710700; returning to 444600, 3711000.

(iv) Subunit 4d: Prima Deshecha; land bounded by the following UTM coordinates (E, N): 442600, 3706000; 442600, 3705900; 442700, 3705900; 442700, 3705700; 442800, 3705700; 442800, 3705500; 442700, 3705500; 442700, 3705300; 442100, 3705300; 442100, 3705400; 442000, 3705400; 442000, 3705900; 442100, 3705900; 442100, 3706000; returning to 442600, 3706000.

(v) Subunit 4e: Forster Ranch; land bounded by the following UTM coordinates (E, N): 443300, 3703500; 443300, 3703400; 443400, 3703400; 443400, 3703300; 443500, 3703300; 443500, 3703100; 443400, 3703100; 443400, 3702900; 443300, 3702900; 443300, 3702800; 443000, 3702800; 443000, 3702900; 442800, 3702900; 442800, 3703400; 442900, 3703400; 442900, 3703500; returning to 443300, 3703500.

(vi) Subunit 4f: Talega/Segunda Deshecha; land bounded by the following UTM coordinates (E, N): 446400, 3705600; 446400, 3705100; 446300, 3705100; 446300, 3705000; 446100, 3705000; 446100, 3704600; 446000, 3704600; 446000, 3704500; 445500, 3704500; 445500, 3704600; 445400, 3704600; 445400, 3705200; 445600, 3705200; 445600, 3705300; 445800, 3705300; 445800, 3705500; 445900, 3705500; 445900, 3705600; returning to 446400, 3705600.

(vii) Subunit 4g: Cristianitos Canyon; land bounded by the following UTM coordinates (E, N): 448300, 3707600; 448300, 3706600; 448200, 3706600; 448200, 3706500; 448100, 3706500; 448100, 3705900; 448300, 3705900; 448300, 3705800; 448500, 3705800; 448500, 3705700; 448600, 3705700; 448600, 3705600; 448700, 3705600; 448700, 3705300; 448600, 3705300; 448600, 3704700; 448700, 3704700; 448700, 3704500; 448800, 3704500; 448800, 3704400; 448700, 3704400; 448700, 3704100; 448600, 3704100; 448600, 3704000; 448200, 3704000; 448200, 3704100; 448100, 3704100; 448100, 3704200; 448000, 3704200; 448000, 3704600; 448100, 3704600; 448100, 3704700; 448000, 3704700; 448000, 3704900; 447900, 3704900; 447900, 3705000; 447800, 3705000; 447800, 3705100; 447700, 3705100; 447700, 3705600; 447800, 3705600; 447800, 3705800; 447700, 3705800; 447700, 3705900; 447600, 3705900; 447600, 3706000; 447500, 3706000; 447500, 3706300; 447600, 3706300; 447600, 3706400; 447900, 3706400; 447900, 3706500; 447700, 3706500; 447700, 3706600; 447600, 3706600; 447600, 3707000; 447700, 3707000; 447700, 3707400; 447800, 3707400; 447800, 3707600; returning to 448300, 3707600.

(viii) Subunit 4h: Cristianitos Canyon South; land bounded by the following UTM coordinates (E, N): 447000, 3702800; 447000, 3702700; 447200, 3702700; 447200, 3702200; 447100, 3702200; 447100, 3702300; 446800, 3702300; 446800, 3702400; 446600, 3702400; 446600, 3702500; 446500, 3702500; 446500, 3702700; 446600, 3702700; 446600, 3702800; returning to 447000, 3702800.

(ix) Subunit 4i: Blind Canyon; land bounded by the following UTM coordinates (E, N): 451500, 3703900; 451500, 3703800; 451700, 3703800; 451700, 3703200; 451400, 3703200; 451400, 3703100; 451300, 3703100; 451300, 3702900; 450800, 3702900; 450800, 3703400; 450900, 3703400; 450900, 3703500; 451100, 3703500; 451100, 3703700; 451200, 3703700; 451200, 3703800; 451300, 3703800; 451300, 3703900; returning to 451500, 3703900.

(x) Map of critical habitat units 3 and 4a–i for *Brodiaea filifolia* (Thread-leaved brodiaea) follows:

BILLING CODE 4310–55–P

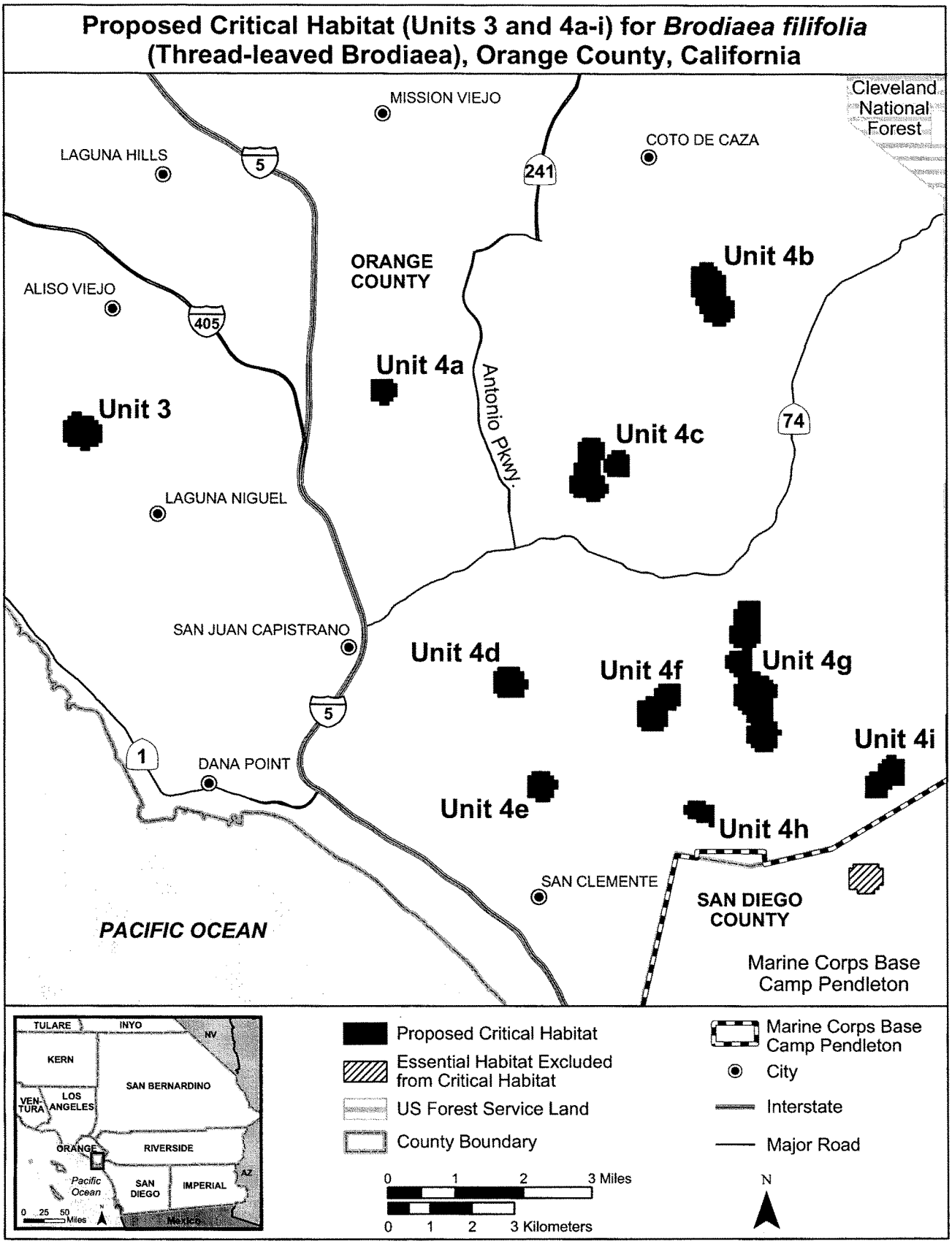
Proposed Critical Habitat (Units 3 and 4a-i) for Brodiaea filifolia (Thread-leaved Brodiaea), Orange County, California
MISSION VIEJO
Cleveland National Forest
COTO DE CAZA
LAGUNA HILLS
5
241
ORANGE COUNTY
Unit 4b
ALISO VIEJO
405
Unit 4a
Antonio Pkwy.
Unit 3
74
Unit 4c
LAGUNA NIGUEL
SAN JUAN CAPISTRANO
Unit 4d
Unit 4f
Unit 4g
5
Unit 4i
1
DANA POINT
Unit 4e
Unit 4h
SAN CLEMENTE
SAN DIEGO COUNTY
PACIFIC OCEAN
Marine Corps Base Camp Pendleton
TULARE
INYO
NV
KERN
SAN BERNARDINO
VEN-TURA
LOS ANGELES
ORANGE
RIVERSIDE
Pacific Ocean
SAN DIEGO
IMPERIAL
AZ
MEXICO
0 25 50 Miles
Proposed Critical Habitat
Essential Habitat Excluded from Critical Habitat
US Forest Service Land
County Boundary
Marine Corps Base Camp Pendleton
City
Interstate
Major Road
0 1 2 3 Miles
0 1 2 3 Kilometers
N

(8) Map of excluded eligible habitat for *Brodiaea filifolia* (Thread-leaved brodiaea), Corona area, Riverside County, California follows:

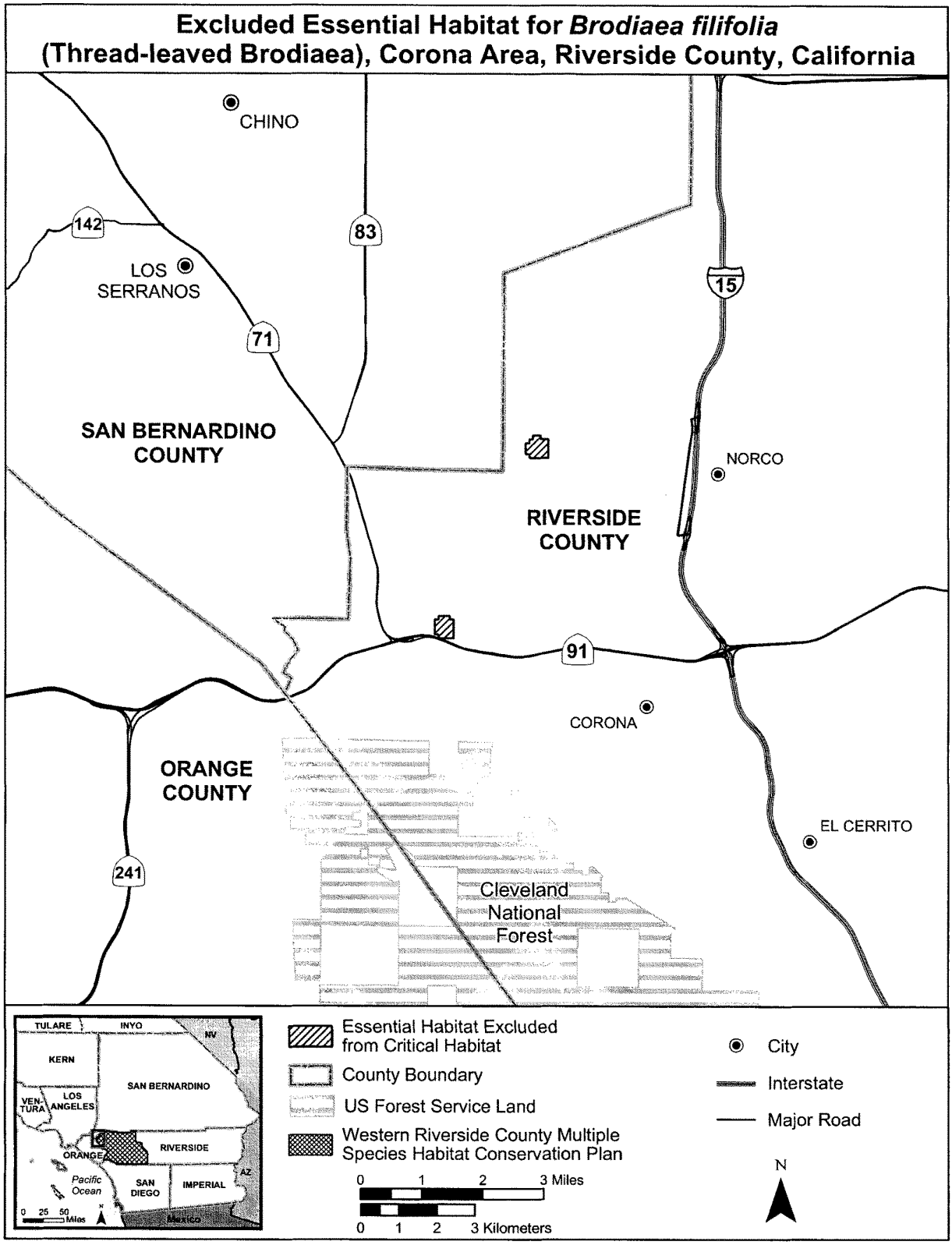

(9) Map of excluded eligible habitat for *Brodiaea filifolia* (Thread-leaved brodiaea), Perris area, Riverside County, California follows:

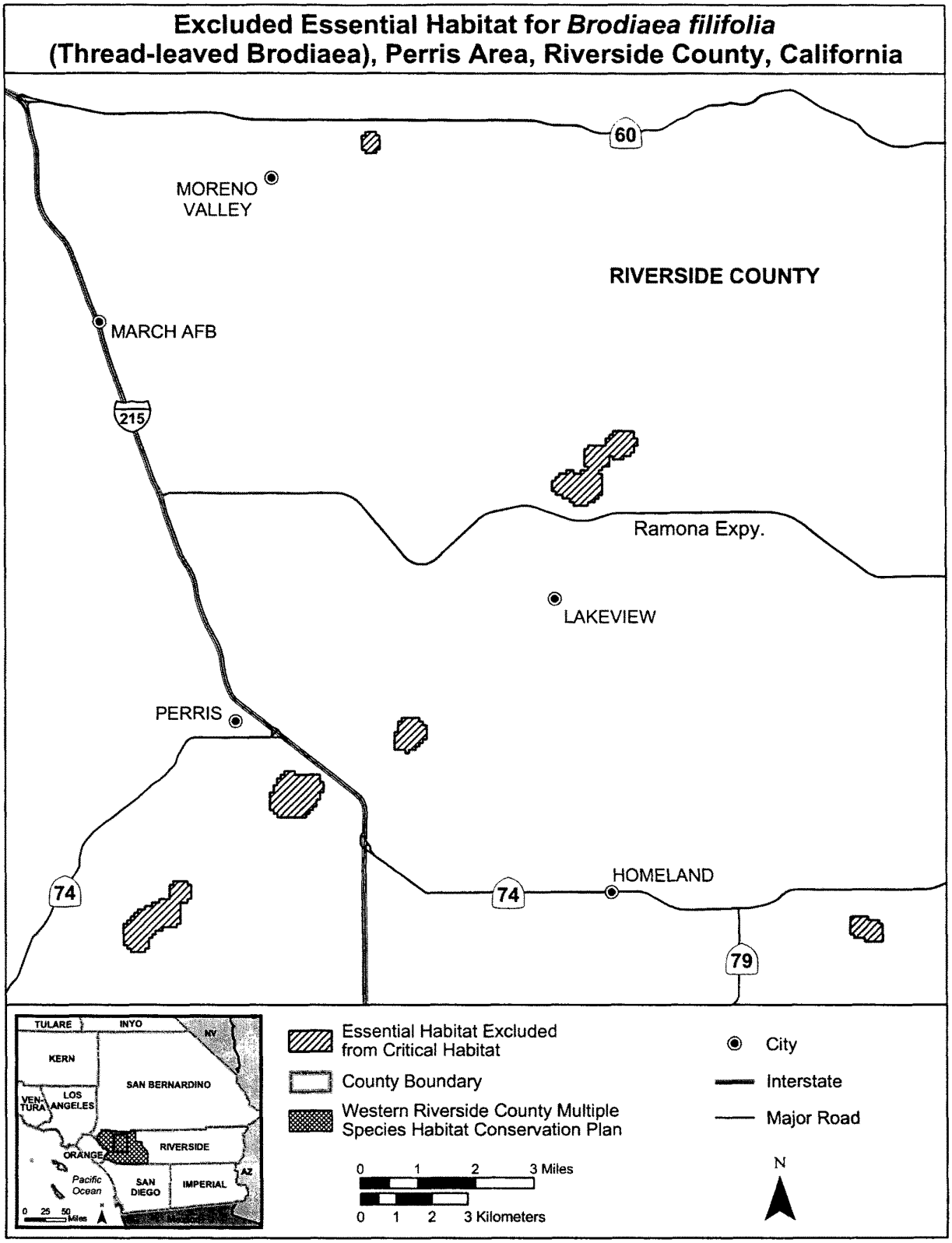

(10) Map Unit 5: Northern San Diego County, California, from USGS 1:24,000 quadrangle maps Sitton Peak, Margarita Peak, and Fallbrook, California.

(i) Subunit 5a: Miller Mountain; land bounded by the following UTM coordinates (E, N): 464300, 3707400; 464300, 3707300; 464400, 3707300; 464400, 3707200; 464500, 3707200; 464500, 3707000; 464800, 3707000; 464800, 3706900; 464900, 3706900; 464900, 3706800; 465000, 3706800; 465000, 3706700; 465100, 3706700; 465100, 3706600; 465200, 3706600; 465200, 3705900; 465100, 3705900; 465100, 3705700; 464400, 3705700; 464400, 3705400; 464300, 3705400; 464300, 3705300; 464200, 3705300; 464200, 3705200; 464100, 3705200; 464100, 3705100; 464000, 3705100; 464000, 3705000; 463900, 3705000; 463900, 3704900; 464100, 3704900; 464100, 3704400; 464000, 3704400; 464000, 3704300; 463800, 3704300; 463800, 3704100; 463700, 3704100; 463700, 3704000; 463600, 3704000; 463600, 3703900; 463300, 3703900; 463300, 3704000; 463200, 3704000; 463200, 3704100; 463100, 3704100; 463100, 3704500; 463200, 3704500; 463200, 3704600; 463400, 3704600; 463400, 3704800; 463200, 3704800; 463200, 3704900; 463100, 3704900; 463100, 3705400; 463300, 3705400; 463300, 3705500; 463400, 3705500; 463400, 3705600; 463500, 3705600; 463500, 3705700; 463300, 3705700; 463300, 3705800; 463100, 3705800; 463100, 3705900; 462900, 3705900; 462900, 3706000; 462800, 3706000; 462800, 3706100; 462600, 3706100; 462600, 3706300; 462500, 3706300; 462500, 3706800; 462600, 3706800; 462600, 3707000; 463100, 3707000; 463100, 3707100; 463300, 3707100; 463300, 3707200; 463400, 3707200; 463400, 3707300; 463500, 3707300; 463500, 3707400; returning to 464300, 3707400.

(ii) Subunit 5b: Devil's Canyon; land bounded by the following UTM coordinates (E, N): 465000, 3702200; 464800, 3702200; 464800, 3702100; 464500, 3702100; 464500, 3702200; 464300, 3702200; 464300, 3702700; 464400, 3702700; 464400, 3702800; 464800, 3702800; 464800, 3702700; 464900, 3702700; 464900, 3702600; 465000, 3702600; returning to 465000, 3702200; and land bounded by 465000, 3702200; 465400, 3702200; 465400, 3702100; 465500, 3702100; 465500, 3701500; 465400, 3701500; 465400, 3701300; 465300, 3701300; 465300, 3701200; 464800, 3701200; 464800, 3701300; 464700, 3701300; 464700, 3701700; 464800, 3701700; 464800, 3702000; 464900, 3702000; 464900, 3702100; 465000, 3702100; returning to 465000, 3702200.

(iii) Map of proposed critical habitat units 5a and 5b for *Brodiaea filifolia* (Thread-leaved brodiaea) follows:

Proposed Critical Habitat (Units 5a and 5b) and Excluded Essential Habitat for *Brodiaea filifolia* (Thread-leaved Brodiaea), Riverside and San Diego Counties, California

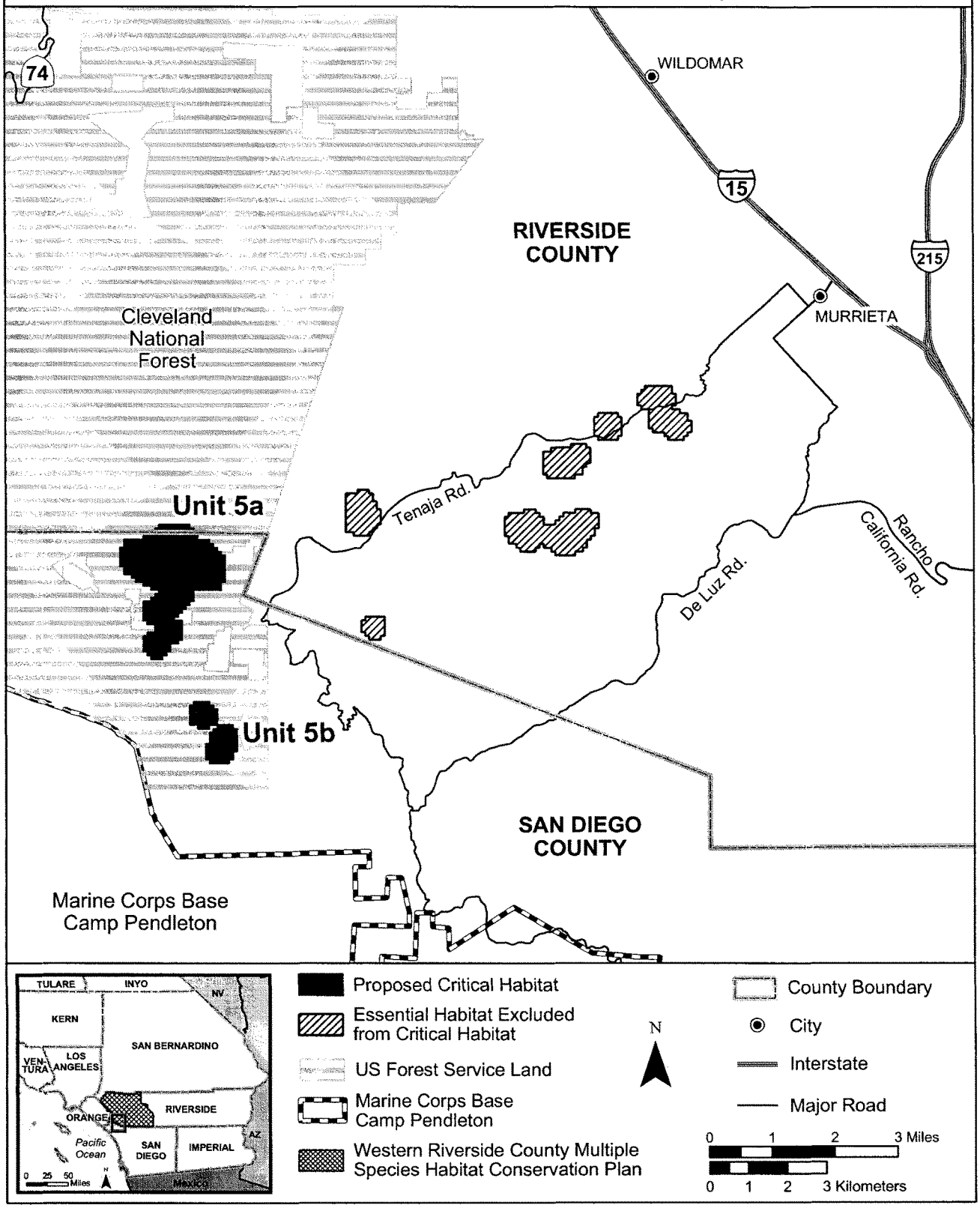

(11) Map of proposed critical habitat units 4g–i, 5a and 5b and excluded eligible habitat for *Brodiaea filifolia* (Thread-leaved brodiaea), Orange, Riverside and San Diego Counties follows:

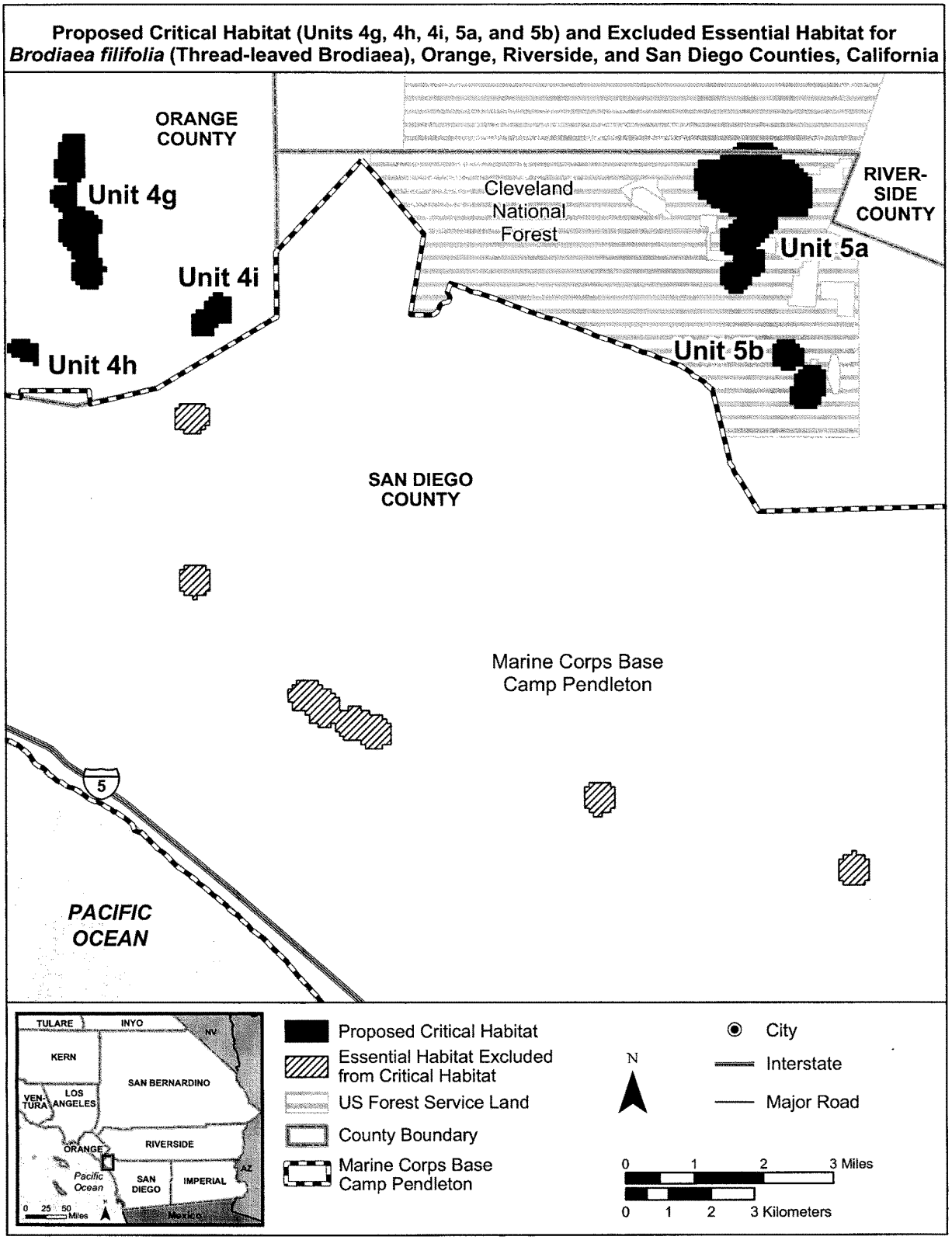

BILLING CODE 4310–55–C

(12) Map Unit 6: Oceanside, San Diego County, California, from USGS 1:24,000 quadrangle map San Luis Rey, California.

(i) Subunit 6a: Alta Creek; land bounded by the following UTM coordinates (E, N): 469300, 3673300; 469300, 3673100; 469400, 3673099; 469400, 3672800; 469100, 3672900; 469000, 3672900; 469000, 3673000; 468900, 3673000; 468900, 3673300; returning to 469300, 3673300.

(ii) Subunit 6b: Mesa Drive; land bounded by the following UTM coordinates (E, N): 469000, 3674300; 468900, 3674300; 468900, 3674500; 469000, 3674500 returning to 469000, 3674300.

(iii) Subunit 6c: Oceanside East/Mission Avenud; land bounded by the following UTM coordinates (E, N): 471400, 3676300; 471500, 3676300; 471500, 3676200; 471600, 3676200; 471600, 3676100; 471600, 3676000; 471600, 3675900; 471600, 3675800; 471500, 3675800; 471500, 3675700; 471400, 3675700; 471300, 3675700; 471200, 3675700; 471200, 3675800; 471100, 3675800; 471100, 3675900; 471100, 3676000; 471100, 3676100; 471100, 3676200; 471200, 3676200; 471200, 3676300; 471300, 3676300; returning to 471400, 3676300.

(iv) Subunit 6d: Taylor/Darwin; land bounded by the following UTM coordinates (E, N): 475100, 3677200; 475100, 3677000; 475400, 3676900; 475300, 3676700; 475300, 3676600; 475100, 3676500; 474900, 3676500; 474800, 3676300; 474700, 3676300; 474700, 3676600; 474800, 3676700; 474800, 3677000; 474900, 3677100; returning to 475100, 3677200.

(13) Map Unit 7: San Diego County, California, from USGS 1:24,000 quadrangle maps San Luis Rey, Rancho Santa Fe, and San Marcos, California.

(i) Subunit 7a: Fox-Miller; land bounded by the following UTM coordinates (E, N): 473900, 3666900; 474200, 3666800; 474400, 3666700; 474400, 3666600; 474500, 3666400; 474400, 3666400; 474200, 3666300; 474100, 3666200; 474000, 3666200; 474000, 3666300; 473600, 3666300; 473600, 3666600; 473800, 3666600; 473800, 3666700; 473900, 3666800; returning to 473900, 3666900.

(ii) Subunit 7b: Rancho Carrillo; land bounded by the following UTM coordinates (E,N): 478300, 3665200; 478400, 3665200; 478400, 3664500; 478300, 3664500; 478300, 3664600; 478100, 3664600; 478100, 3664800; 478200, 3664800; 478200, 3665000; 478300, 3665000; returning to 478300, 3665200.

(14) Map Unit 8: San Marcos, San Diego County, California, from USGS 1:24,000 quadrangle maps San Marcos and Rancho Santa Fe, California.

(i) Subunit 8a: Rancho Santa Fe Road North; land bounded by the following UTM coordinates (E, N): 478700, 3665300; 478700, 3665200; 478800, 3665200; 478800, 3665000; 478700, 3665000; 478700, 3664700; 478800, 3664700; 478800, 3664500; 478900, 3664500; 478900, 3664100; 478700, 3664100; 478700, 3664000; 478600, 3664000; 478600, 3664300; 478500, 3664300; 478500, 3665300; returning to 478700, 3665300.

(ii) Subunit 8b: Rancho Santalina/Loma Alta; land bounded by the following UTM coordinates (E, N): 482000, 3668900; 482200, 3668900; 482200, 3668300; 482400, 3668100; 482400, 3668000; 482100, 3668300; 482100, 3668700; 482000, 3668500; 482000, 3668300; 481900, 3668200; 482000, 3668100; 482200, 3667900; 482200, 3667800; 482100, 3667800; 481900, 3668000; 481700, 3668400; 481700, 3668600; returning to 482000, 3668900.

(iii) Subunit 8c: Grand Avenue; land bounded by the following UTM coordinates (E, N): 482000, 3667300; 482000, 3667100; 481800, 3667100; 481800, 3667300; returning to 482000, 3667300.

(iv) Subunit 8d: Upham; land bounded by the following UTM coordinates (E, N): 481600, 3666800; 481700, 3666800; 481900, 3666700; 482100, 3666700; 482100, 3666800; 482300, 3666800; 482300, 3666400; 482200, 3666400; 482000, 3666300; 481900, 3666300; 481900, 3666200; 482000, 3665900; 481900, 3665900; 481900, 3665800; 481700, 3665800; 481700, 3665900; 481600, 3666100; 481400, 3666100; 481400, 3666300; 481700, 3666300; 481700, 3666200; 481800, 3666200; 481800, 3666400; 481500, 3666400; 481500, 3666600; 481600, 3666600; returning to 481600, 3666800.

(v) Subunit 8e: Linda Vista; land bounded by the following UTM coordinates (E, N): 483000, 3666500; 483100, 3666500; 483100, 3666400; 483000, 3666400; 483000, 3666300; 482800, 3666300; 482800, 3666600; 482900, 3666600; 482900, 3666700; 483000, 3666700; returning to 483000, 3666500.

(15) (i) Map Unit 9: Double LL Ranch; San Diego County, California. From USGS 1:24,000 quadrangle map Rancho Santa Fe, California, land bounded by the following UTM coordinates (E, N): 479700, 3658600; 479700, 3658200; 479800, 3658200; 479800, 3657900; 479500, 3657900; 479500, 3658000; 479600, 3658000; 479600, 3658100; 479400, 3658100; 479400, 3658400; 479300, 3658400; 479300, 3658600; returning to 479700, 3658600.

(ii) Map of proposed critical habitat units 6a-d, 7a-b, 8a-e and 9 for *Brodiaea filifolia* (Thread-leaved brodiaea), San Diego County, follows:

BILLING CODE 4310–55–P

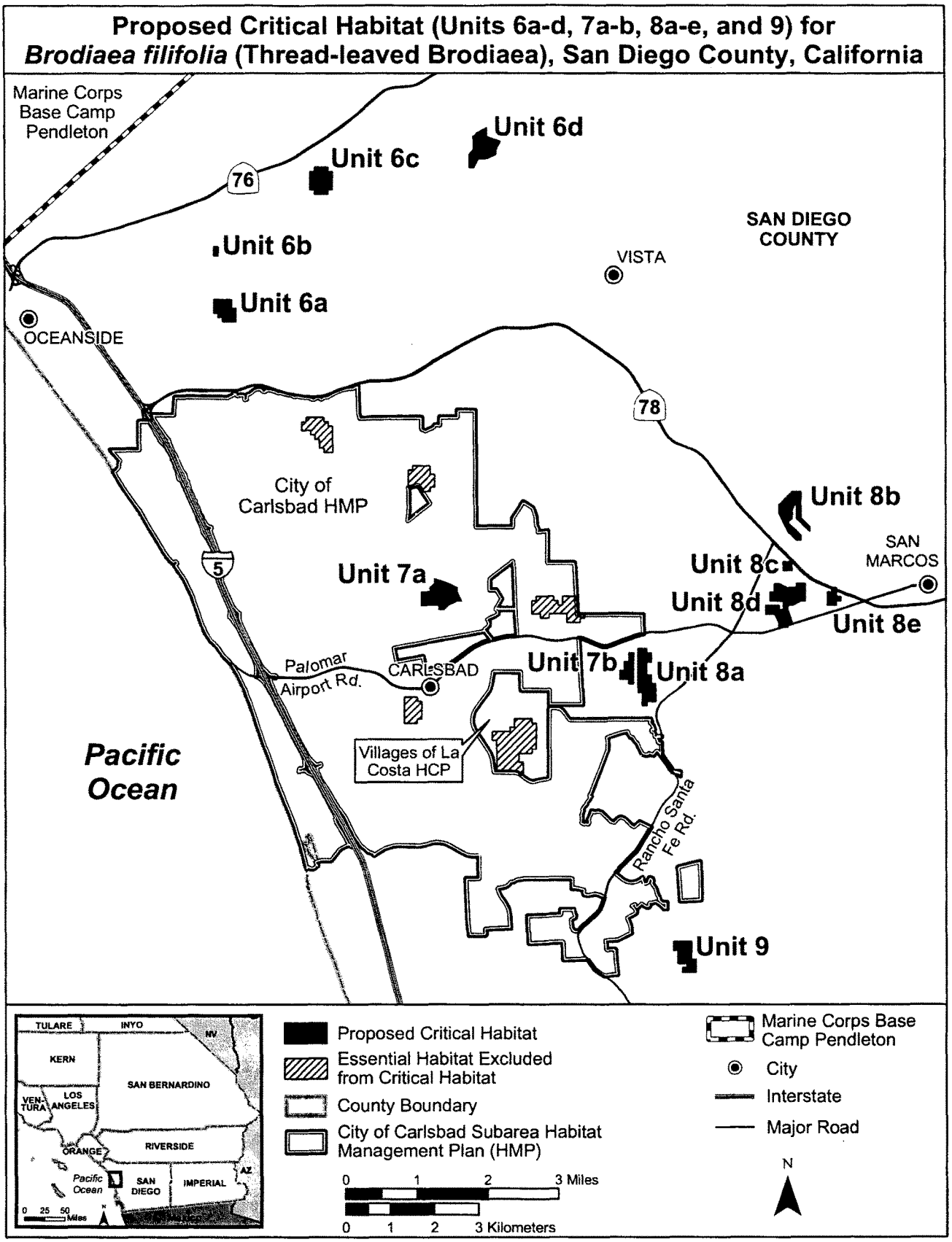
Proposed Critical Habitat (Units 6a-d, 7a-b, 8a-e, and 9) for
Brodiaea filifolia (Thread-leaved Brodiaea), San Diego County, California
Marine Corps Base Camp Pendleton
Unit 6d
Unit 6c
76
Unit 6b
Unit 6a
SAN DIEGO COUNTY
VISTA
OCEANSIDE
78
City of Carlsbad HMP
Unit 8b
SAN MARCOS
5
Unit 7a
Unit 8c
Unit 8d
Unit 8e
Palomar Airport Rd.
CARLSBAD
Unit 7b
Unit 8a
Villages of La Costa HCP
Pacific Ocean
Rancho Santa Fe Rd.
Unit 9
TULARE
INYO
NV
KERN
SAN BERNARDINO
VEN-TURA
LOS ANGELES
ORANGE
RIVERSIDE
Pacific Ocean
SAN DIEGO
IMPERIAL
AZ
0 25 50 Miles
Proposed Critical Habitat
Essential Habitat Excluded from Critical Habitat
County Boundary
City of Carlsbad Subarea Habitat Management Plan (HMP)
0 1 2 3 Miles
0 1 2 3 Kilometers
Marine Corps Base Camp Pendleton
City
Interstate
Major Road
N

(16) (i) Map Unit 10: Highland Valley, San Diego County, California. From USGS 1:24,000 quadrangle map San Pasqual, California, land bounded by the following UTM coordinates (E, N): 505500, 3655100; 505500, 3655000; 505600, 3655000; 505600, 3654600; 505500, 3654600; 505500, 3654500; 505200, 3654500; 505200, 3654600; 505100, 3654600; 505100, 3654700; 505000, 3654700; 505000, 3655000; 505100, 3655000; 505100, 3655100; returning to 505500, 3655100.

(ii) Map of proposed critical habitat unit 10 for *Brodiaea filifolia* (Thread-leaved brodiaea), San Diego County, follows:

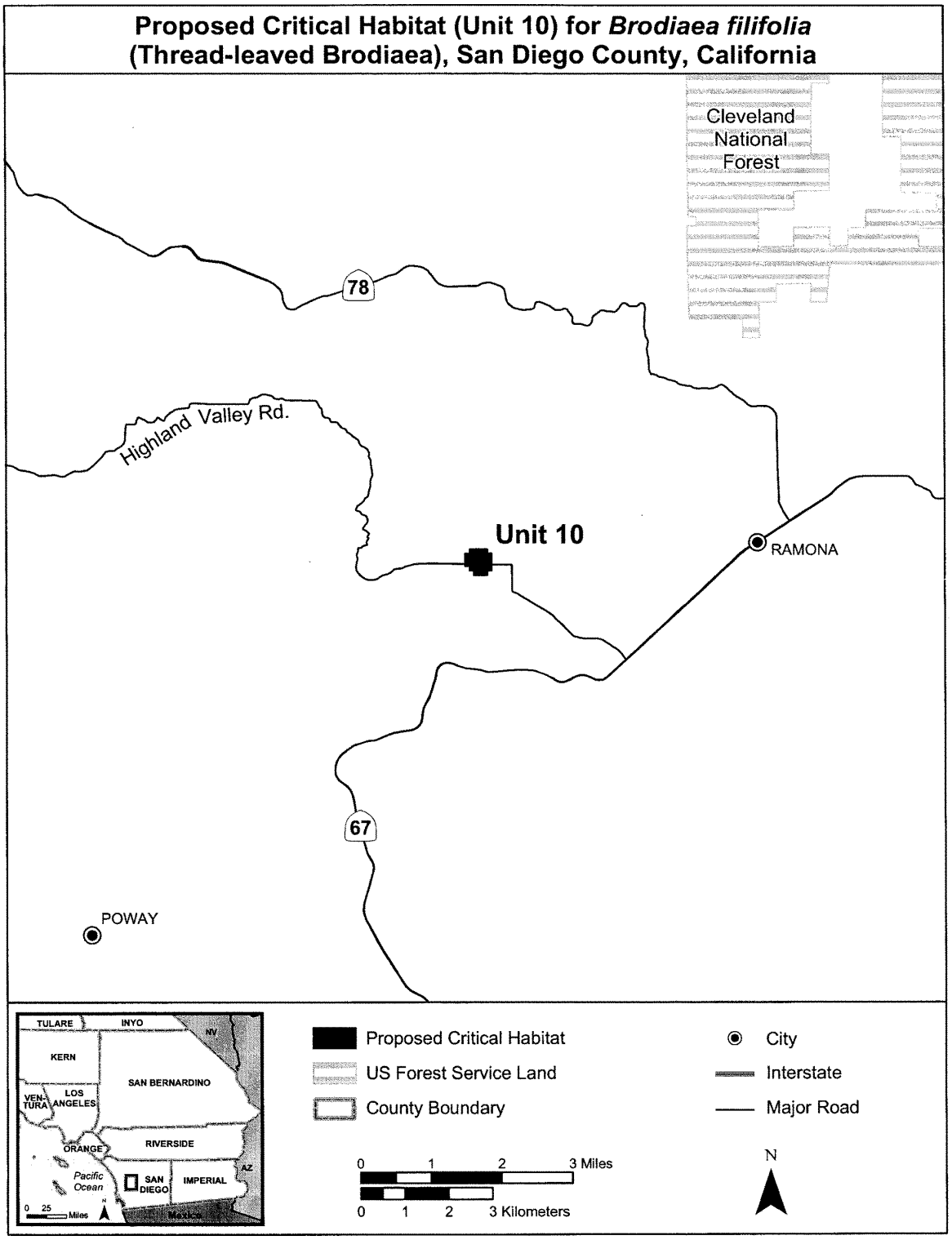

BILLING CODE 4310–55–C

* * * * *

Dated: November 30, 2004.

Craig Manson,

Assistant Secretary for Fish and Wildlife and Parks.

[FR Doc. 04–26687 Filed 12–7–04; 8:45 am]

BILLING CODE 4310–55–P

Federal Register

Wednesday,
December 8, 2004

Part V

Securities and Exchange Commission

17 CFR Part 248
Disposal of Consumer Report Information; Final Rule

SECURITIES AND EXCHANGE COMMISSION

17 CFR Part 248

[Release Nos. 34–50781, IA–2332, IC–26685; File No. S7–33–04]

RIN 3235–AJ24

Disposal of Consumer Report Information

AGENCY: Securities and Exchange Commission.

ACTION: Final rule.

SUMMARY: The Securities and Exchange Commission (''Commission'') is adopting amendments to the rule under Regulation S–P requiring financial institutions to adopt policies and procedures to safeguard customer information. The amended rule implements the provision in section 216 of the Fair and Accurate Credit Transactions Act of 2003 requiring proper disposal of consumer report information and records. Section 216 directs the Commission and other federal agencies to adopt regulations requiring that any person who maintains or possesses consumer report information or any compilation of consumer report information derived from a consumer report for a business purpose must properly dispose of the information. The amendments also require the policies and procedures adopted under the safeguard rule to be in writing.

DATES: *Effective Date:* January 11, 2005.

Compliance Date: July 1, 2005. Existing contracts with service providers for services involving the disposal or destruction of consumer report information must comply with § 248.30(b) by July 1, 2006.

FOR FURTHER INFORMATION CONTACT: For information regarding the rule amendments as they relate to investment companies or to investment advisers registered with the Commission, contact Penelope W. Saltzman, Branch Chief, or Vincent M. Meehan, Attorney, Office of Regulatory Policy, at the Division of Investment Management, (202) 942–0690, as they relate to brokers or dealers, Catherine McGuire, Chief Counsel, Brian Bussey, Assistant Chief Counsel, or Tara Prigge, Attorney, Office of Chief Counsel, at the Division of Market Regulation, (202) 942–0073, or as they relate to transfer agents registered with the Commission contact Jerry Carpenter, Assistant Director, or David Karasik, Special Counsel, Office of Clearance and Settlement, at the Division of Market Regulation, (202) 942–4187, Securities and Exchange Commission, 450 Fifth Street, NW., Washington, DC 20549.

SUPPLEMENTARY INFORMATION: The Commission is adopting amendments to Regulation S–P under section 501(b) of the Gramm-Leach Bliley Act (''GLBA'') [15 U.S.C. 6801(b)], section 216 of the Fair and Accurate Credit Transactions Act of 2003 (''FACT Act'' or ''Act'') [Pub. L. 108–159, 117 Stat. 152 (2003)], the Securities Exchange Act of 1934 (the ''Exchange Act'') [15 U.S.C. 78], the Investment Company Act of 1940 (the ''Investment Company Act'') [15 U.S.C. 80a], and the Investment Advisers Act of 1940 (the ''Investment Advisers Act'') [15 U.S.C. 80b].

Table of Contents

I. Background
II. Discussion
A. Rule 30(b): Disposal of consumer report information and records.
B. Rule 30(a): Procedures to safeguard customer records and information.
C. Effective Date; Compliance Date.
III. Cost-Benefit Analysis
IV. Paperwork Reduction Act
V. Final Regulatory Flexibility Analysis
VI. Consideration of Promotion of Efficiency, Competition, and Capital Formation
VII. Statutory Authority

I. Background

Section 216 of the FACT Act amended the Fair Credit Reporting Act (''FCRA''),[1] by imposing a new requirement on persons who possess or maintain, for a business purpose, consumer information derived from consumer reports. The provision is designed, in general, to protect a consumer against the risks associated with unauthorized access to information about the consumer contained in a consumer report, such as fraud and related crimes, including identity theft. The FACT Act requires that ''any person that maintains or otherwise possesses consumer information, or any compilation of consumer information, derived from consumer reports for a business purpose[,] properly dispose of any such information or compilation.'' [2]

The FACT Act requires the Office of the Comptroller of the Currency, the Board of Governors of the Federal Reserve System, the Federal Deposit Insurance Corporation, the Office of Thrift Supervision (collectively, the ''Banking Agencies''), the National Credit Union Administration, the Federal Trade Commission (''FTC'') (collectively with the Banking Agencies, the ''Agencies''), and the Commission to consult and coordinate with each other in order that, to the extent possible, regulations implementing section 216 are consistent and comparable. This provision also requires that the regulations must be consistent with the GLBA and other provisions of Federal law. Commission staff has coordinated with the Agencies to ensure that the regulations implementing section 216 are consistent and comparable with each other and with the GLBA.[3]

On September 14, 2004, the Commission proposed rule amendments to implement the requirements of section 216 of the FACT Act.[4] We proposed to implement section 216 by adopting an amendment, set forth as paragraph (b) (the ''disposal rule''), to rule 30 of Regulation S–P.[5] We also proposed to amend our ''safeguard rule,'' which we adopted in 2000 pursuant to section 501 of the GLBA, and redesignate this provision as paragraph (a) of rule 30.[6] The safeguard rule requires that brokers, dealers, and investment companies, as well as investment advisers registered with the Commission (''registered investment advisers'') adopt policies and procedures to address administrative, technical, and physical safeguards for the protection of customer records and information. We proposed to require that these policies and procedures be ''written.''

II. Discussion

Firms regulated by the Commission may maintain or possess consumer reports or information derived or

[1] 15 U.S.C. 1681. The FACT Act was signed into law on December 4, 2003. Pub. L. No. 108–159, 117 Stat. 1952 (2003). Section 216 of the FACT Act adds a new section 628 of the FCRA, which is codified at 15 U.S.C. 1681w.

[2] FACT Act § 216 (codified at 15 U.S.C. 1681w(a)(1)).

[3] The FTC has adopted a separate rule to implement section 216 of the Act. *See* Disposal of Consumer Report Information and Records, 69 FR 68690 (Nov. 24, 2004) (''FTC Rule''). The National Credit Union Administration implemented section 216 of the FACT Act by amending its existing rule governing security programs and guidelines regarding the rule. *See* Fair Credit Reporting—Proper Disposal of Consumer Information Under the Fair and Accurate Credit Transactions Act of 2003, 69 FR 69269 (Nov. 29, 2004). The Banking Agencies have proposed to implement section 216 by amending their guidelines establishing safeguards for customer information. *See* Proper Disposal of Consumer Information Under the Fair and Accurate Credit Transactions Act of 2003, 69 FR 31913 (June 8, 2004).

[4] *See* Disposal of Consumer Report Information, Investment Company Act Release No. 26596 (Sept. 14, 2004) [69 FR 56304 (Sept. 20, 2004)] (''Proposing Release'').

[5] *See* Proposing Release, *supra* note 4. Regulation S–P is set forth in 17 CFR part 248. Unless otherwise noted, all references to rule 30 or any paragraph of the rule will be to 17 CFR 248.30, as amended.

[6] *See* Proposing Release, *supra* note 4. *See also* Privacy of Consumer Financial Information (Regulation S–P), Securities Exchange Act Release No. 42974 (June 22, 2000) [65 FR 40334 (June 29, 2000)] (''Privacy Release'').

compiled from consumer reports for a variety of business purposes. For example, a broker-dealer may possess the information in connection with margin accounts or the sale of variable annuities, an investment adviser may obtain a client's consumer report in connection with providing financial planning services, and any of these firms may possess the information in connection with making employment decisions. Our proposed rule to implement section 216 of the FACT Act would apply to brokers and dealers (other than brokers and dealers registered by notice with the Commission under section 15(b)(11) of the Exchange Act for the purpose of conducting business in security futures products (''notice-registered broker-dealers''), investment companies,[7] registered investment advisers, and transfer agents registered with the Commission (''registered transfer agents'' and, collectively, with brokers-dealers other than notice-registered broker-dealers, investment companies, and registered investment advisers, ''covered entities''). The proposed disposal rule would require that covered entities that possess such information for a business purpose take reasonable measures to protect against unauthorized access to or use of the information in connection with its disposal.

We received seven comment letters in response to our proposal, which generally supported a rule providing for the proper disposal of consumer report information.[8] We are adopting the amendments to Regulation S–P substantially as proposed. Comments on specific provisions in the amendments are discussed below.

A. Rule 30(b): Disposal of Consumer Report Information and Records

1. Rule 30(b)(1): Definitions

Amended rule 30 is part of Regulation S–P and, therefore, the definitions set forth in Regulation S–P apply to terms used in the amended rule. The disposal rule also includes definitions of additional terms used in that rule.[9]

Consumer report. Rule 30(b)(1)(i) defines the term ''consumer report'' to have the same meaning as in section 603(d) of the FCRA.[10] We received no comments suggesting changes to this definition, and we are adopting it as proposed.

Consumer report information. The proposed disposal rule defined ''consumer report information'' as any record about an individual, whether in paper, electronic, or other form, that is a consumer report or is derived from a consumer report. The Proposing Release stated that the phrase ''derived from consumer reports'' would cover all of the information about a consumer that is derived from any consumer report(s), including information taken from a consumer report, information that results in whole or in part from manipulation of information taken from a consumer report, and information that has been combined with other types of information.[11] The Proposing Release further explained that because the definition of ''consumer report information'' refers to records ''about an individual,'' information that does not identify particular consumers would not be covered under the proposed disposal rule.[12] Commenters generally supported the proposed definition, although some requested clarification or modification of the definition of consumer report information.

One commenter noted that the term ''consumer report information'' does not appear in section 216 of the FACT Act, and that the definition of the term does not follow the language set forth in section 216. We believe that the definition of ''consumer report information'' is consistent with the statutory language.[13] Nevertheless, consistent with the FTC Rule, we have modified the definition of ''consumer report information'' to include compilations of information derived from a consumer report. Although the proposed rule covered compilations of this information, the revised definition more closely follows the statutory language of section 216, and makes the definition clearer.[14]

Several commenters specifically supported the application of the proposed disposal rule only to information that identifies particular individuals, and requested that the disposal rule be more explicit on this point. In response to those comments, and in order to provide additional guidance and clarity, we have added language emphasizing that information that does not identify individuals, such as aggregate information or blind data, is not covered by the definition of ''consumer report information.''[15]

One commenter also sought guidance on the kinds of information that would be considered subject to the proposed

[7] The term ''investment company'' is defined for purposes of the disposal rule in Regulation S–P. *See* 17 CFR 248.3(r). *See also* section II.A.1. The definition in Regulation S–P incorporates the definition of ''investment company'' under the Investment Company Act, including an investment company that is not registered with the Commission. *See* 15 U.S.C. 80a–3. Accordingly, a business development company, which is an investment company but is not required to register with the Commission, would be subject to the disposal rule. *See* Privacy Release, *supra* note 6, at n.74 and accompanying text.

[8] Commenters included two individuals and associations representing investment advisers, investment companies, securities firms, the information destruction industry, and information management professionals.

[9] *See* rule 30(b)(1).

[10] The FCRA defines ''consumer report'' to mean ''* * * any written, oral, or other communication of any information by a consumer reporting agency bearing on a consumer's credit worthiness, credit standing, credit capacity, character, general reputation, personal characteristics, or mode of living which is used or expected to be used or collected in whole or in part for the purpose of serving as a factor in establishing the consumer's eligibility for (A) credit or insurance to be used primarily for personal, family, or household purposes; (B) employment purposes; or (C) any other purpose authorized under section 604'' of the FCRA. *See* 15 U.S.C. 1681a(d)(1). A ''consumer reporting agency'' is defined as ''any person which, for monetary fees, dues, or on a cooperative nonprofit basis, regularly engages in whole or in part in the practice of assembling or evaluating consumer credit information or other information on consumers for the purpose of furnishing consumer reports to third parties, and which uses any means or facility of interstate commerce for the purpose of preparing or furnishing consumer reports.'' *See* 15 U.S.C. 1681a(f). The statute also provides exclusions from the definition, which include: ''any (i) report containing information solely as to transactions or experiences between the consumer and the person making the report; (ii) communication of that information among persons related by common ownership or affiliated by corporate control; or (iii) communication of other information among persons related by common ownership or affiliated by corporate control, if it is clearly and conspicuously disclosed to the consumer that the information may be communicated among such persons and the consumer is given the opportunity, before the time that the information is initially communicated, to direct that such information not be communicated among such persons * * * .'' *See* 15 U.S.C. 1681a(d)(2).

[11] *See* Proposing Release, *supra* note 4, at n.16 and text preceding and accompanying n.16.

[12] *See id.*, at n.11 and accompanying text.

[13] Section 216 requires a person that possesses ''consumer information, or any compilation of consumer information derived from consumer reports'' for a business purpose to properly dispose of the information. *See supra* note 2 and accompanying text. Information that is derived from a consumer report would include the consumer report itself.

The disposal rule uses the term ''consumer report information'' rather than ''consumer information'' (the term used in section 216 of the FACT Act) to reduce potential confusion with the terms ''consumer financial information'' and ''customer information,'' which are used in connection with the other provisions of Regulation S–P adopted under the GLBA. As noted in the Proposing Release, consumer or customer information subject to the GLBA and other sections of Regulation S–P and consumer report information subject to the FACT Act and rule 30(b) are separate, but overlapping, sets of information. *See* Proposing Release, *supra* note 4, at n.20.

[14] *See* Proposing Release, *supra* note 4 (proposed rule 30(b)(2) set forth the standards for disposal of consumer report information or any compilation of that information).

[15] The terms ''aggregate information'' and ''blind data'' as used in the disposal rule are intended to have the same meaning as in § 248.3(u)(2)(ii)(B). 17 CFR 248.3(u)(2)(ii)(B).

rule. We note that any information derived from a consumer report that identifies an individual, including a person's name and a variety of other personal identifiers, would bring information within the scope of the disposal rule. These identifiers include, but are not limited to, a social security number, phone number, physical address, and e-mail address. We have not included a rigid definition in the disposal rule, however, because, depending on the circumstances, items of information that are not inherently identifying can, in combination, identify particular individuals.

Disposal. Proposed rule 30(b)(1)(iii) defined ''disposal'' to mean the (i) discarding or abandonment of consumer report information, as well as the (ii) sale, donation, or transfer of any medium, including computer equipment, on which consumer report information is stored. The Proposing Release noted that the sale, donation, or transfer of consumer report information, by itself, would not be considered ''disposal'' under this definition.[16] For example, an entity subject to the disposal rule that transfers consumer report information to a third party for marketing purposes would not be discarding the information for purposes of the disposal rule.[17] Commenters generally supported the two meanings, and we have adopted this definition substantially as proposed. In addition, consistent with the FTC's final rule, the disposal rule makes clear that disposal means either (i) the discarding or abandonment of consumer report information, or (ii) the sale, donation, or transfer of any medium, including computer equipment, on which consumer report information is stored. Although one commenter requested the rule text provide additional clarification, we believe our statements above, and in the Proposing Release are sufficiently clear that the sale of consumer report information in connection with a business transaction or the transfer of that information for marketing purposes would not be considered ''disposal.'' [18]

Notice-registered broker-dealers. Proposed rule 30(b) also included definitions of ''notice-registered broker-dealers'' and ''transfer agent.'' We received no comments on those definitions and are adopting them as proposed.

2. Rule 30(b)(2)(i): Proper Disposal of Consumer Report Information

The disposal rule requires covered entities that maintain or possess ''consumer report information'' for a business purpose to take ''reasonable measures to protect against unauthorized access to or use of the information in connection with its disposal.'' Recognizing that there are few foolproof methods of record destruction, the Proposing Release stated that the proposed disposal rule would not require covered entities to ensure perfect destruction of consumer report information in every instance; rather, it would require covered entities to take reasonable measures to protect against unauthorized access to or use of the information in connection with its disposal. In determining what measures are ''reasonable'' under the disposal rule, we stated that we expect covered entities to consider the sensitivity of the consumer report information, the nature and size of the entity's operations, the costs and benefits of different disposal methods, and relevant technological changes. We also noted that ''reasonable measures'' are very likely to require elements such as the establishment of policies and procedures governing disposal, as well as appropriate employee training.

The majority of commenters supported this flexible standard for disposal, and no commenter opposed the standard. One commenter, however, suggested that recipients of information about consumers may not always know whether the information they receive was derived from a consumer report. The commenter suggested, therefore, that only if a recipient knows or should have known it has received consumer report information should it be required to dispose of the information in compliance with the disposal rule.

We note that the protections mandated by the FACT Act and disposal rule do not assume knowledge by covered entities, and knowledge is not an element or a prerequisite to enforcement under either the Act or the rule. Nevertheless, we also note that in most, if not all, circumstances covered by the rule, covered entities will or should know if they possess consumer report information.

In order to provide additional clarity, the Proposing Release included examples intended to provide guidance on disposal measures that would be deemed reasonable under the disposal rule. Commenters that mentioned the examples found them to be helpful, but did not advocate that they be included in the rule text. One commenter requested that the examples be included in the final release. Accordingly, we note that, while each covered entity would have to evaluate what is appropriate for its size and the complexity of its operations, reasonable disposal measures for purposes of the disposal rule could include:

(i) Implementing and monitoring compliance with policies and procedures that require the burning, pulverizing, or shredding of papers containing consumer report information so that the information cannot practicably be read or reconstructed;

(ii) Implementing and monitoring compliance with policies and procedures that require the destruction or erasure of electronic media containing consumer report information so that the information cannot practicably be read or reconstructed;

(iii) After due diligence, entering into a contract with another party engaged in the business of record destruction to dispose of material, specifically identified as consumer report information, in a manner consistent with the disposal rule. In this context, due diligence could include reviewing an independent audit of the disposal company's operations and/or its compliance with the disposal rule, obtaining information about the disposal company from several references or other reliable sources, requiring that the disposal company be certified by a recognized trade association or similar third party, reviewing and evaluating the disposal company's information security policies or procedures, or taking other appropriate measures to determine the competency and integrity of the potential disposal company;

(iv) For covered entities that maintain or otherwise possess consumer report information through their provision of services directly to a person subject to the disposal rule, implementing and monitoring compliance with policies and procedures that protect against unauthorized or unintentional disposal of consumer report information, and disposing of the information in accordance with the first two examples; and

(v) For covered entities subject to the GLBA and the Commission's safeguard rule, incorporating the proper disposal of consumer report information as required by the disposal rule into the safeguard policies and procedures required by the safeguard rule.

We have revised the third example and added a fourth example to clarify the ''reasonable measures'' standard requirements when information is transferred or otherwise provided to service providers. We revised the third example so that it explicitly contemplates that a record owner will tell a service provider when it is providing the service provider with consumer report information.[19] The

[16] *See* Proposing Release, *supra* note 4, at text preceding n.12.

[17] The ability of the entity to transfer information to a third party may, however, be limited by other laws and regulations, such as the GLBA and Regulation S–P.

[18] *See supra* note 17 and accompanying text; Proposing Release, *supra* note 4, at text preceding n.12.

[19] Although the example involves a disposal service provider, the measures it contemplates

revised example is intended clearly to illustrate that, if a covered entity transfers or otherwise provides consumer report information to a service provider, the ''reasonable measures'' standard will generally require the covered entity to take reasonable steps to select and retain a service provider that is capable of properly disposing of the consumer report information at issue; notify the service provider that the information is consumer report information; and enter into a contract that requires the service provider to dispose of the information in accordance with the disposal rule. The fourth example is intended to clarify that covered entities have responsibilities with respect to service providers while also ensuring that covered entities that act as service providers have sufficient information so that they can make the arrangements needed to fulfill their responsibilities to properly dispose of consumer report information.

We have also added a fifth example to reflect our discussion in the Proposing Release regarding the relationship between the disposal rule and the safeguard rule. In the Proposing Release, we recognized that in some circumstances, ''customer records and information'' subject to the safeguard rule may overlap with ''consumer report information'' subject to the disposal rule. To the extent there is overlap, customer records and information would be subject to the disposal rule. We explained that proper disposal policies and procedures are encompassed within, and should be a part of, the overall policies and procedures required under the safeguard rule.[20] Accordingly, a covered entity could comply with the disposal rule by applying its policies and procedures under the safeguard rule, including methods for the proper disposal of customer information, consumer report information or any compilation of that information. We note, however, that in those circumstances, the disposal methods applied under the safeguard rule would have to satisfy the standards for proper disposal set forth in the disposal rule.

3. Rule 30(b)(2)(ii): Relation to Other Laws

Proposed rule 30(b)(2)(ii) made clear that nothing in the disposal rule was intended to create a requirement that a person maintain or destroy any record pertaining to a consumer. The Proposing Release also stated that the proposed disposal rule is not intended to affect any requirement imposed under any other provision of law to maintain or destroy such records. We are adopting the provision substantially as proposed; we are adding the word ''other'' before the word ''provision'' in paragraph (b)(2)(ii)(B) consistent with the statutory language.

4. Scope of the Disposal Rule

The FACT Act differs in scope from the GLBA. As discussed in the Proposing Release, Regulation S–P (including the safeguard rule) and the disposal rule have some differences in scope with respect both to the information and entities that are subject to the respective rules.[21] Our proposal contained four provisions to address those differences.[22] First, we proposed to amend § 248.1(b) of Regulation S–P to except the disposal rule from the provision that describes the scope of information subject to Regulation S–P. Second, we proposed to revise § 248.2(b) to except the disposal rule from the provision in Regulation S–P that permits notice-registered broker-dealers to comply with the regulation by complying with financial privacy rules adopted by the Commodity Futures Trading Commission. Third, the proposed disposal rule would exclude notice-registered broker-dealers from its application. Finally, the proposed disposal rule would apply to transfer agents registered with the Commission.[23]

We received no comments on these provisions. Accordingly, we are adopting them as proposed.

B. Rule 30(a): Procedures To Safeguard Customer Records and Information

The Proposing Release also contained a proposed amendment to the safeguard rule. As discussed in more detail in the Proposing Release, our staff found that some firms it examined lack written policies and procedures that address the safeguard requirements. We noted that in the absence of reasonable documentation it is difficult to identify these policies and procedures and test for compliance with the safeguard rule. We also questioned whether an organization of any size and complexity could reasonably manage to safeguard customer records and information without written policies and procedures. To help ensure reasonable protection for customer records and information, and to permit compliance oversight by our examiners, we proposed to require that policies and procedures under the safeguard rule be written. Commenters supported the proposed amendment, and we are adopting it as proposed.

Our Proposing Release also asked for comment on ways to maintain a flexible approach to the safeguard rule, while establishing certain elements that firms would be required to consider in developing their policies and procedures. We specifically asked for comment on whether the safeguard rule should adopt similar standards as those set forth in the FTC's safeguard rule.[24] The commenters that specifically addressed the issue opposed requiring elements that each safeguard program should address. We will take these comments into consideration in the event we propose any further amendments to the safeguard rule. We are not adopting any additional changes to the safeguard rule today.

C. Effective Date; Compliance Date

The amendments will become effective on January 11, 2005. Two commenters requested we require compliance after the effective date in order to allow covered entities to evaluate how the rule applies to current business practices and to develop and implement disposal policies. These commenters suggested we require compliance 180 days and 24 months after adoption of the amendments. As we noted in the Proposing Release, we believe that most firms have policies and procedures for disposal of customer information as part of the policies and procedures required under the safeguard rule that could be applied to consumer report information.[25] In addition, it should be relatively easy for a covered entity that does not currently have policies and procedures that could apply to consumer report information to address the disposal of that information by adopting policies and procedures as one part of its overall safeguarding program. Accordingly, we are requiring that covered entities comply with the amendments no later than July 1, 2005.

We also received a request that we exempt information that is disposed under existing service contracts from the standards for disposal of consumer

would also generally be reasonable with respect to other types of services providers.

[20] *See* Proposing Release, *supra* note 4, at text following n.21.

[21] *See* Proposing Release, *supra* note 4, section II.A.4. *See also supra* note 13.

[22] *See* Proposing Release, *supra* note 4, at section II.A.4.

[23] *See* amended rules 1(b), 2(b); 30(b)(2) [17 CFR 248.1(b); 248.2(b); 248.30(b)(2)].

[24] *See* Federal Trade Commission, Standards for Safeguarding Customer Information, 67 FR 36484 (May 23, 2002) (''FTC Safeguard Rule'').

[25] As discussed above, the policies and procedures applied under the safeguard rule would have to satisfy the standard set forth in the disposal rule for disposing of consumer report information.

report information. We do not believe that an exemption is necessary if covered entities are given a longer period in which to amend these contracts. Accordingly, we are requiring covered entities to bring any existing contracts with service providers for services involving the disposal or destruction of consumer report information into compliance with rule 30(b) by July 1, 2006.

III. Cost-Benefit Analysis

We are sensitive to the costs and benefits that result from our rules. As discussed above, the amendments implement section 216 of the FACT Act by requiring covered entities that maintain or possess consumer report information for a business purpose to properly dispose of the information. The amendments also require that an institution's safeguarding policies and procedures be in writing. In the Proposing Release, we requested comment and specific data regarding the costs and benefits of the proposed amendments.[26] We received one comment that generally supported our analysis in the Proposing Release, and we received no comments that provided specific data on the costs and benefits of the proposed amendments.

A. Benefits

The disposal rule seeks to prevent the unauthorized disclosure of information contained in consumer reports and reduce the risk of fraud and related crimes, including identity theft. The unauthorized disclosure of this information results in significant expense for the consumers, businesses and financial institutions that are the victims of these crimes. Requiring covered entities to take reasonable measures to protect against unauthorized access to consumer report information during its disposal will benefit consumers and covered entities by reducing the incidence of identity theft and lessening related losses.

The amendment to the safeguard rule will benefit firms because written policies and procedures will eliminate uncertainty for employees and promote more systematic and organized reviews of the firms' own safeguard policies and procedures. Firms and their customers may also benefit from the amendment if firms develop more comprehensive and effective policies as they translate informal, unwritten policies into writing. Moreover, investors should benefit from our examiners' enhanced ability to conduct compliance oversight. The Commission has no way of quantifying these benefits.

B. Costs

We believe that the disposal rule and the safeguard rule amendment will impose minimal costs on firms. The disposal rule does not establish specific requirements for the disposal of consumer report information, and it will only affect firms that do not currently provide adequate protections for the disposal of consumer report information as a part of the existing requirement to protect customer records and information. Covered entities, depending on their particular circumstances, may have to provide employee training, or establish clear procedures for consumer report information disposal. Costs to firms that are not already in compliance will vary depending on the size of the firm, the adequacy of its existing disposal policy, and the nature of the firm's operation. As noted above, the flexible standard in the disposal rule is specifically designed to minimize the burden of compliance for smaller entities. The emphasis on performance rather than design standards in the rule takes account of the entity's size, operations, and sophistication, as well as the costs and benefits of alternative disposal methods. In addition, the ''reasonable measures'' standard in the rule is consistent with the current safeguard rule. Therefore, it should be relatively easy for a firm that does not currently have policies and procedures that could apply to consumer report information to address the disposal of that information by adopting reasonable disposal measures as one part of its overall safeguarding policies and procedures.

Similarly, we do not anticipate that drafting or implementing the safeguard rule amendment's requirement to document policies and procedures in writing will be costly. Firms have been required to have reasonable polices and procedures in place since 2001. As part of this requirement and as a good business practice, we believe that most firms have already established their policies in writing. For the minority of firms that have unwritten policies, the cost will involve transcribing what is understood and accepted practice. If a firm has not given significant thought to the safeguarding of customer records and information, the firm may incur additional costs if it develops more comprehensive and effective policies in the course of documentation.

IV. Paperwork Reduction Act

As discussed in the Proposing Release, the disposal rule does not impose any recordkeeping requirement or otherwise constitute a ''collection of information'' as it is defined in the regulations implementing the Paperwork Reduction Act of 1995 (''PRA'').[27] As discussed further in the Proposing Release, however, the safeguard rule amendment contains a ''collection of information'' within the meaning of the PRA.

Today we are adopting the amendment to the safeguard rule substantially as proposed. To aid our compliance examiners to determine whether institutions have met the safeguard requirements, the amendment requires that policies and procedures under the safeguard rule be written. As we stated in the Proposing Release, while we believe that most of the institutions that we regulate have adopted written safeguard policies and procedures as a matter of good business practice, those that have not already documented their policies and procedures will be required to do so. We published notice soliciting comments on the collection of information requirement in the Proposing Release and submitted the proposed collection of information to the Office of Management and Budget (''OMB'') for review in accordance with 44 U.S.C. 3507(d) and 5 CFR 1320.11.[28] None of the commenters addressed the PRA burden associated with this amendment. The new information collection requirement is mandatory. Under the amendment, the written safeguard policies and procedures will not be filed with or otherwise submitted to the Commission. Accordingly, we make no assurance of confidentiality with respect to the collection of information.

The title for the collection of information is ''Procedures to safeguard customer records and information; disposal of consumer report information.'' An agency may not conduct or sponsor, and a person is not required to respond to, a collection of information unless it displays a currently valid OMB control number.

V. Final Regulatory Flexibility Analysis

This Final Regulatory Flexibility Analysis has been prepared in accordance with 5 U.S.C. 604. It relates to the disposal rule, which requires that reasonable measures be taken to protect

[26] *See* Proposing Release, *supra* note 4, at section IV.C.

[27] *See* 5 CFR 1320.3(c); 44 U.S.C. 3506.

[28] In the Proposing Release, we estimated that the aggregate burden for all covered entities in the first year after adoption would be 631,925 hours. We further estimated that the average weighted annual burden for all covered entities over the three-year period for which we requested approval of the information collection burden would be approximately 276,780 hours. *See* Proposing Release, *supra* note 4, at section V.

against unauthorized access to consumer report information during its disposal. It also relates to the amendment to the safeguard rule that requires financial institutions to document policies and procedures to safeguard customer information in writing. The Initial Regulatory Flexibility Analysis (''IRFA''), which was prepared in accordance with 5 U.S.C. 603, was published in the Proposing Release.[29]

A. Reasons for the Rule Amendments

As described more fully in section I of this Release, section 216 of the FACT Act requires the Commission to issue regulations regarding the proper disposal of consumer report information in order to prevent sensitive financial and personal information from falling into the hands of identity thieves or others who might use the information to victimize consumers. The disposal rule is intended to implement the requirements of section 216.

As discussed above, the amendment to the safeguard rule requires entities subject to the rule to document their policies and procedures in writing. The amendment is intended to ensure reasonable protection for customer records and information and to permit compliance oversight by our examiners.

B. Significant Issues Raised by Public Comment

In the IRFA, we requested comment on any aspect of the IRFA and specifically requested comment on the number of small entities that would be affected by the proposed amendments and the likely impact of the proposal on small entities. We received no comments on the IRFA. The commenters generally supported the Commission's proposal to implement section 216 of the FACT Act. Three of the commenters supported the proposed amendment to the safeguard rule. No commenters opposed the amendments.

C. Small Entities Subject to the Amendments

The disposal rule applies to brokers and dealers (other than notice-registered broker-dealers), investment companies, registered investment advisers, and registered transfer agents that maintain or otherwise possess consumer report information for a business purpose. Institutions covered by the amendment to the safeguard rule will include brokers and dealers (other than notice-registered broker-dealers), investment companies, and registered investment advisers. Of the entities registered with the Commission, 906 broker-dealers, 233 investment companies, 592 registered investment advisers, and 170 registered transfer agents are considered small entities.[30]

D. Reporting, Recordkeeping, and Other Compliance Requirements

As discussed above, the disposal rule does not impose any reporting or any specific recordkeeping requirements within the meaning of the Paperwork Reduction Act. The rule requires covered entities, when disposing of consumer report information, to take reasonable measures to protect against unauthorized access to or use of the information in connection with its disposal. What is considered ''reasonable'' will vary according to an entity's nature and size, the costs and benefits of available disposal methods, and the sensitivity of the information involved. In formulating the disposal rule, we considered alternatives to this approach, and determined that the flexibility afforded by the rule reduces the burden that might otherwise be imposed on small entities by a more rigid, prescriptive rule.

With regard to the amendment to the safeguard rule, we note that firms are already required to have policies and procedures that address the safeguarding of customer information and records. This requirement provides a flexible standard that allows each firm to tailor these policies and procedures to the firm's particular systems, methods of information gathering, and customer needs. We assume that most institutions have already documented these policies and procedures, but the amendment requires all institutions to put their policies and procedures in writing. The amount of time it will take institutions that do not have written policies and procedures will vary based on the extent and complexity of the policies and procedures the institution has adopted.

E. Commission Action To Minimize Effect on Small Entities

The Regulatory Flexibility Act directs us to consider significant alternatives that would accomplish the stated objective, while minimizing any significant adverse impact on small entities. Alternatives in this category would include: (i) The establishment of differing compliance or reporting requirements or timetables that take into account the resources available to small entities; (ii) the clarification, consolidation, or simplification of compliance and reporting requirements under the rules for small entities; (iii) the use of performance rather than design standards; and (iv) an exemption from coverage of the rules, or any part thereof, for small entities.

With respect to the disposal rule, the Commission does not believe that an exemption from coverage or special compliance or reporting requirements for small entities would be consistent with the mandates of the FACT Act. In addition, the Commission does not believe that clarification, consolidation, or simplification of the amendment for small entities is feasible or necessary. Section 216 of the FACT Act addresses the protection of consumer privacy, and consumer privacy concerns do not depend on the size of the entity involved. Nevertheless, we have endeavored throughout the disposal rule to minimize the regulatory burden on all covered entities, including small entities, while meeting the statutory requirements. Small entities should benefit from the flexible standards in the disposal rule. In addition, the emphasis on performance rather than design standards in the rule takes account of the covered entity's size and sophistication, as well as the costs and benefits of alternative disposal methods.

With respect to the amendment to the safeguard rule, we do not believe that an exemption from coverage or special reporting or compliance requirements for small entities is feasible or necessary. The requirement that covered entities document their safeguard policies and procedures in writing is necessary to promote systematic and

[29] *See* Proposing Release, *supra* note 4, at section VI.

[30] For purposes of the Regulatory Flexibility Act, under the Exchange Act a small entity is a broker or dealer that had total capital of less than $500,000 on the date of its prior fiscal year and is not affiliated with any person that is not a small entity. 17 CFR 240.0–10. Under the Investment Company Act a ''small entity'' is an investment company that, together with other investment companies in the same group of related investment companies, has net assets of $50 million or less as of the end of its most recent fiscal year. 17 CFR 270.0–10. Under the Investment Advisers Act, a small entity is an investment adviser that ''(i) manages less than $25 million in assets, (ii) has total assets of less than $5 million on the last day of its most recent fiscal year, and (iii) does not control, is not controlled by, and is not under common control with another investment adviser that manages $25 million or more in assets, or any person that had total assets of $5 million or more on the last day of the most recent fiscal year.'' 17 CFR 275.0–7. A small entity in the transfer agent context is defined to be any transfer agent that (i) received less than 500 items for transfer and less than 500 items for processing during the preceding six months; (ii) transferred only items of issuers that would be deemed ''small businesses'' or ''small organizations'' under rule 0–10 under the Exchange Act; (iii) maintained master shareholder files that in the aggregate contained less than 1,000 shareholder accounts at all times during the preceding fiscal year; and (iv) is not affiliated with any person (other than a natural person) that is not a small business or small organization under rule 0–10. 17 CFR 240.0–10.

organized reviews of these policies and procedures by the entity, as well as to allow Commission staff to identify and test effectively for compliance with the safeguard rule.

Similarly, the Commission does not believe that clarification, consolidation, or simplification of the amendment for small entities is feasible or necessary. The requirement that safeguard policies and procedures be in writing, as discussed above, is essential to allowing both the entity and Commission staff to review the entity's policies and procedures.

The safeguard rule embodies performance rather than design standards. It affords each institution the flexibility to adopt and implement policies and procedures that are appropriate in light of the institution's size and the complexity of its operations. The documentation of the policies and procedures will reflect these performance standards. Accordingly, the writing required under the amendment will only be as technical or complex as the policies and procedures required to be documented.

VI. Consideration of Promotion of Efficiency, Competition, and Capital Formation

Section 3(f) of the Exchange Act and section 2(c) of the Investment Company Act mandate that the Commission, when engaging in rulemaking that requires it to consider or determine whether an action is necessary or appropriate in the public interest, to consider, in addition to the protection of investors, whether the action will promote efficiency, competition, and capital formation. Section 23(a)(2) of the Exchange Act prohibits the Commission from adopting any rule under the Exchange Act that would impose a burden on competition that is not necessary or appropriate in furtherance of the purposes of the Exchange Act.

We do not believe that the disposal rule will have an anti-competitive impact. The disposal rule applies to all brokers and dealers (other than notice-registered broker-dealers), investment companies, registered investment advisers, and registered transfer agents. Each of these entities must take reasonable measures to properly dispose of consumer report information.

Other entities will be subject to substantially similar disposal requirements under the Agencies' rules. As directed by the FACT Act, the Agencies and the Commission have worked in consultation and coordination with one another to ensure the consistency and comparability of the regulations. Therefore, all financial institutions will have to bear the costs of implementing the rules or substantially similar rules. Although these costs will vary among entities subject to the rule, we do not believe that the costs will be significantly greater for any particular entity or entities when calculated as a percentage of overall costs.

Furthermore, we believe the disposal rule will have little effect on efficiency and capital formation. The rule will result in some additional costs for some entities, particularly those entities that do not currently take reasonable measures to properly dispose of consumer report information. However, we believe the additional costs are small enough that they will not affect the efficiency of these entities. We also believe that any effect the disposal rule may have on capital formation will be positive. To the extent that the disposal rule gives investors greater confidence in the security of information possessed by covered entities, investors may be more likely to invest their assets in the capital markets through covered entities.

With respect to the amendment to the safeguard rule, we do not believe the amendment will have an anti-competitive impact. As noted above, we believe that most brokers, dealers, investment companies, and registered investment advisers already have written safeguard policies and procedures. To the extent some do not, those firms will have to conform to standards that many firms have met voluntarily. This amendment also will be consistent with the guidelines issued by the Banking Agencies regarding the safeguarding of customer records and information and the FTC's Safeguard Rule, which require that the financial institutions the Agencies regulate document their policies and procedures in writing.[31] Firms that currently do not have written policies and procedures will incur costs of documentation already borne by firms that have written policies and procedures. Although these costs will vary among institutions subject to the amendment, we do not believe that the costs will be significantly greater for any particular firm or firms when calculated as a percentage of overall costs.

Furthermore, we believe the amendment will have little effect on efficiency and capital formation. We expect the amended rule will increase efficiency among those firms that do not currently have written policies and procedures because it should promote more systematic and organized reviews of these policies and procedures. The amendment will result in some additional costs for firms that do not currently have written policies and procedures. However, we believe the additional costs are small enough that they will not affect the efficiency of these firms. To the extent there is any effect, the amendment may foster capital formation. Our experience is that covered entities with effective safeguard programs that are documented in writing and communicated to all employees are less likely to violate the safeguard rule and harm to investors is less likely to result. To the extent this type of environment increases investor confidence in covered entities, investors and clients are more likely to make assets available through these entities for investment in the capital markets.

In the Proposing Release, we solicited comment on our analysis of the impact of these amendments on efficiency, competition and capital formation. We did not receive any comment on our analysis.

VII. Statutory Authority

The Commission is amending Regulation S–P pursuant to the authority set forth in section 501(b) of the GLBA [15 U.S.C. 6801(b)], section 628 of the FCRA [15 U.S.C. 1681w], sections 17, 23, and 36 of the Exchange Act [15 U.S.C. 78q, 78w, and 78mm], sections 31(a) and 38 of the Investment Company Act [15 U.S.C. 80a–30(a) and 80a–37], and sections 204 and 211 of the Investment Advisers Act [15 U.S.C. 80b–4 and 80b–11].

List of Subjects in 17 CFR Part 248

Brokers, Dealers, Investment advisers, Investment companies, Privacy, Reporting and recordkeeping requirements, Transfer agents.

Text of Rules

■ For the reasons set out in the preamble, title 17, chapter II of the Code of Federal Regulations is amended as follows:

PART 248—REGULATION S–P: PRIVACY OF CONSUMER FINANCIAL INFORMATION

■ 1. The authority citation for part 248 is revised to read as follows:

Authority: 15 U.S.C. 6801–6809; 15 U.S.C. 1681w; 15 U.S.C. 78q, 78w, 78mm, 80a–30(a), 80a–37, 80b–4, and 80b–11.

[31] *See* Federal Reserve System, Federal Deposit Insurance Corporation, Department of the Treasury Office of Thrift Supervision, and Department of the Treasury Office of the Comptroller of the Currency, Interagency Guidelines Establishing Standards for Safeguarding Customer Information, 66 FR 8616 (Feb. 1, 2001); FTC Safeguard Rule, *supra* note 24.

§ 248.1 [Amended]

■ 2. Section 248.1, the first sentence of paragraph (b) is amended by revising the phrase ''This part'' to read ''Except with respect to § 248.30(b), this part''.

§ 248.2 [Amended]

■ 3. Section 248.2, paragraph (b) is amended by revising the phrase ''Any futures commission merchant'' to read ''Except with respect to § 248.30(b), any futures commission merchant''.

■ 4. Section 248.30 is amended as follows:

■ a. Revise the section heading;

■ b. Introductory text, paragraphs (a), (b), and (c) are redesignated as paragraphs (a) introductory text, (a)(1), (a)(2), and (a)(3) respectively;

■ c. In the newly redesignated introductory text of paragraph (a), add the word ''written'' before the phrase ''policies and procedures'' in the first and second sentences; and

■ d. Add new paragraph (b).

The revision and addition read as follows:

§ 248.30 Procedures to safeguard customer records and information; disposal of consumer report information.

* * * * *

(b) *Disposal of consumer report information and records*—(1) *Definitions* (i) *Consumer report* has the same meaning as in section 603(d) of the Fair Credit Reporting Act (15 U.S.C. 1681a(d)).

(ii) *Consumer report information* means any record about an individual, whether in paper, electronic or other form, that is a consumer report or is derived from a consumer report. Consumer report information also means a compilation of such records. Consumer report information does not include information that does not identify individuals, such as aggregate information or blind data.

(iii) *Disposal* means:

(A) The discarding or abandonment of consumer report information; or

(B) The sale, donation, or transfer of any medium, including computer equipment, on which consumer report information is stored.

(iv) *Notice-registered broker-dealers* means a broker or dealer registered by notice with the Commission under section 15(b)(11) of the Securities Exchange Act of 1934 (15 U.S.C. 78o(b)(11)).

(v) *Transfer agent* has the same meaning as in section 3(a)(25) of the Securities Exchange Act of 1934 (15 U.S.C. 78c(a)(25)).

(2) *Proper disposal requirements*—(i) *Standard*. Every broker and dealer other than notice-registered broker-dealers, every investment company, and every investment adviser and transfer agent registered with the Commission, that maintains or otherwise possesses consumer report information for a business purpose must properly dispose of the information by taking reasonable measures to protect against unauthorized access to or use of the information in connection with its disposal.

(ii) *Relation to other laws.* Nothing in this section shall be construed:

(A) To require any broker, dealer, or investment company, or any investment adviser or transfer agent registered with the Commission to maintain or destroy any record pertaining to an individual that is not imposed under other law; or

(B) To alter or affect any requirement imposed under any other provision of law to maintain or destroy any of those records.

By the Commission.

Dated: December 2, 2004.

Margaret H. McFarland,

Deputy Secretary.

[FR Doc. 04–26878 Filed 12–7–04; 8:45 am]

BILLING CODE 8010–01–P

Federal Register

Wednesday,
December 8, 2004

Part VI

The President

Executive Order 13365—2004 Amendments to the Manual for Courts-Martial, United States

Federal Register
Vol. 69, No. 235
Wednesday, December 8, 2004

Presidential Documents

Title 3—

The President

Executive Order 13365 of December 3, 2004

2004 Amendments to the Manual for Courts-Martial, United States

By the authority vested in me as President by the Constitution and the laws of the United States of America, including chapter 47 of title 10, United States Code (Uniform Code of Military Justice, 10 U.S.C. 801–946), and in order to prescribe amendments to the Manual for Courts-Martial, United States, prescribed by Executive Order 12473, as amended, it is hereby ordered as follows:

Section 1. (a) Paragraph 4 of the Preamble to Part I of the Manual for Courts-Martial, United States, is amended by adding a third subparagraph to read as follows:

''The Department of Defense Joint Service Committee (JSC) on Military Justice reviews the Manual for Courts-Martial and proposes amendments to the Department of Defense for con sideration by the President on an annual basis. In conducting its annual review, the JSC is guided by DoD Directive 5500.17, ''The Roles and Responsibilities of the Joint Service Committee (JSC) on Military Justice.'' DoD Directive 5500.17 includes provisions allowing public participation in the annual review process.''

(b) Department of Defense Directive 5500.17 shall be included as Appendix 26 to the Manual for Courts-Martial, United States.

Sec. 2. Part II of the Manual for Courts-Martial, United States, is amended as follows:

(a) R.C.M. 307(c)(3) is amended to read as follows:

''*Specification.* A specification is a plain, concise, and definite statement of the essential facts constituting the offense charged. A specification is sufficient if it alleges every element of the charged offense expressly or by necessary implication. Except for aggravating factors under R.C.M. 1003(d) and R.C.M. 1004, facts that increase the maximum authorized punishment must be alleged in order to permit the possible increased punishment. No particular format is required.''

(b) R.C.M. 707(b)(3)(D) is amended to read as follows:

''*Rehearings.* If a rehearing is ordered or authorized by an appellate court, a new 120-day time period under this rule shall begin on the date that the responsible convening authority receives the record of trial and the opinion authorizing or directing a rehearing. An accused is brought to trial within the meaning of this rule at the time of arraignment under R.C.M. 904 or, if arraignment is not required (such as in the case of a sentence-only rehearing), at the time of the first session under R.C.M. 803.''

(c) R.C.M. 707(c) is amended to read as follows:

''(c) *Excludable delay.* All periods of time during which appellate courts have issued stays in the proceedings, or the accused is absent without authority, or the accused is hospitalized due to incompetence, or is otherwise in the custody of the Attorney General, shall be excluded when determining whether the period in subsection (a) of this rule has run. All other pretrial delays approved by a military judge or the convening authority shall be similarly excluded.''

(d) R.C.M. 707(d) is amended to read as follows:

''(d) *Remedy.* A failure to comply with this rule will result in dismissal of the affected charges, or, in a sentence-only rehearing, sentence relief as appropriate.

''(1) *Dismissal.* Dismissal will be with or without prejudice to the government's right to reinstitute court-martial proceedings against the accused for the same offense at a later date. The charges must be dismissed with prejudice where the accused has been deprived of his or her constitutional right to a speedy trial. In determining whether to dismiss charges with or without prejudice, the court shall consider, among others, each of the following factors: the seriousness of the offense; the facts and circumstances of the case that lead to dismissal; the impact of a re-prosecution on the administration of justice; and any prejudice to the accused resulting from the denial of a speedy trial.

''(2) *Sentence relief.* In determining whether or how much sentence relief is appropriate, the military judge shall consider, among others, each of the following factors: the length of the delay, the reasons for the delay, the accused's demand for speedy trial, and any prejudice to the accused from the delay. Any sentence relief granted will be applied against the sentence approved by the convening authority.''

(e) R.C.M. 806(b) is amended to read as follows:

''(b) *Control of spectators and closure.*

''(1) *Control of spectators.* In order to maintain the dignity and decorum of the proceedings or for other good cause, the military judge may reasonably limit the number of spectators in, and the means of access to, the courtroom, and exclude specific persons from the courtroom. When excluding specific persons, the military judge must make findings on the record establishing the reason for the exclusion, the basis for the military judge's belief that exclusion is necessary, and that the exclusion is as narrowly tailored as possible.

''(2) *Closure.* Courts-martial shall be open to the public unless (1) there is a substantial probability that an overriding interest will be prejudiced if the proceedings remain open; (2) closure is no broader than necessary to protect the overriding interest; (3) reasonable alternatives to closure were considered and found inadequate; and (4) the military judge makes case-specific findings on the record justifying closure.''

(f) R.C.M. 916(k)(2) is amended to read as follows:

''(2) *Partial mental responsibility.* A mental condition not amounting to a lack of mental responsibility under subsection (k)(1) of this rule is not an affirmative defense.''

(g) R.C.M. 1103(f)(2) is amended to read as follows:

''(2) Direct a rehearing as to any offense of which the accused was found guilty if the finding is supported by the summary of the evidence contained in the record, provided that the convening authority may not approve any sentence imposed at such a rehearing more severe than or in excess of that adjudged by the earlier court-martial.''

(h) The following subsection (iv) is inserted after R.C.M. 1107(e)(1)(B)(iii) to read as follows:

''(iv) *Sentence reassessment.* If a superior authority has approved some of the findings of guilty and has authorized a rehearing as to other offenses and the sentence, the convening authority may, unless otherwise directed, reassess the sentence based on the approved findings of guilty and dismiss the remaining charges. Reassessment is appropriate only where the convening authority determines that the accused's sentence would have been at least of a certain magnitude had the prejudicial error not been committed and the reassessed sentence is appropriate in relation to the affirmed findings of guilty.''

(i) R.C.M. 1108(b) is amended to read as follows:

''(b) *Who may suspend and remit.* The convening authority may, after approving the sentence, suspend the execution of all or any part of the sentence of a court-martial, except for a sentence of death. The general

court-martial convening authority over the accused at the time of the court-martial may, when taking the action under R.C.M. 1112(f), suspend or remit any part of the sentence. The Secretary concerned and, when designated by the Secretary concerned, any Under Secretary, Assistant Secretary, Judge Advocate General, or commanding officer may suspend or remit any part or amount of the unexecuted part of any sentence other than a sentence approved by the President or a sentence of confinement for life without eligibility for parole that has been ordered executed. The Secretary concerned may, however, suspend or remit the unexecuted part of a sentence of confinement for life without eligibility for parole only after the service of a period of confinement of not less than 20 years. The commander of the accused who has the authority to convene a court-martial of the kind that adjudged the sentence may suspend or remit any part of the unexecuted part of any sentence by summary court-martial or of any sentence by special court-martial that does not include a bad-conduct discharge regardless of whether the person acting has previously approved the sentence. The ''unexecuted part of any sentence'' is that part that has been approved and ordered executed but that has not actually been carried out.''

(j) R.C.M. 1305(c) is amended to read as follows:

''(c) *Authentication.* The summary court-martial shall authenticate the record by signing the original record of trial.''

(k) R.C.M. 1306(b)(1) is amended to read as follows:

''(1) *Who shall act.* Except as provided herein, the convening authority shall take action in accordance with R.C.M. 1107. The convening authority shall not take action before the period prescribed in R.C.M. 1105(c)(2) has expired, unless the right to submit matters has been waived under R.C.M. 1105(d).''

Sec. 3. Part III of the Manual for Courts-Martial, United States, is amended as follows:

(a) Mil. R. Evid. 103(a)(2) is amended to read as follows:

''(2) *Offer of proof.* In case the ruling is one excluding evidence, the substance of the evidence was made known to the military judge by offer or was apparent from the context within which questions were asked. Once the military judge makes a definitive ruling on the record admitting or excluding evidence, either at or before trial, a party need not renew an objection or offer of proof to preserve a claim of error for appeal. The standard provided in this subdivision does not apply to errors involving requirements imposed by the Constitution of the United States as applied to members of the armed forces except insofar as the error arises under these rules and this subdivision provides a standard that is more advantageous to the accused than the constitutional standard.''

(b) Mil. R. Evid. 404(a) is amended to read as follows:

''(a) *Character evidence generally.* Evidence of a person's character or a trait of character is not admissible for the purpose of proving action in conformity therewith on a particular occasion, except:

''(1) *Character of accused.* Evidence of a pertinent trait of character offered by an accused, or by the prosecution to rebut the same, or if evidence of a pertinent trait of character of the alleged victim of the crime is offered by an accused and admitted under Mil. R. Evid. 404(a)(2), evidence of the same trait of character, if relevant, of the accused offered by the prosecution;

''(2) *Character of alleged victim.* Evidence of a pertinent trait of character of the alleged victim of the crime offered by an accused, or by the prosecution to rebut the same, or evidence of a character trait of peacefulness of the alleged victim offered by the prosecution in a homicide or assault case to rebut evidence that the alleged victim was an aggressor;

''(3) *Character of witness.* Evidence of the character of a witness, as provided in Mil. R. Evid. 607, 608, and 609.''

(c) Mil. R. Evid. 701 is amended to read as follows:

''If the witness is not testifying as an expert, the witness' testimony in the form of opinions or inferences is limited to those opinions or inferences that are (a) rationally based on the perception of the witness, (b) helpful to a clear understanding of the witness' testimony or the determination of a fact in issue, and (c) not based in scientific, technical, or other specialized knowledge within the scope of Rule 702.''

(d) Mil. R. Evid. 702 is amended to read as follows:

''If scientific, technical, or other specialized knowledge will assist the trier of fact to understand the evidence or to determine a fact in issue, a witness qualified as an expert by knowledge, skill, experience, training, or education may testify thereto in the form of an opinion or otherwise if (1) the testimony is based upon sufficient facts or data, (2) the testimony is the product of reliable principles and methods, and (3) the witness has applied the principles and methods reliably to the facts of the case.''

(e) Mil. R. Evid. 703 is amended to read as follows:

''The facts or data in the particular case upon which an expert bases an opinion or inference may be those perceived by or made known to the expert, at or before the hearing. If of a type reasonably relied upon by experts in the particular field in forming opinions or inferences upon the subject, the facts or data need not be admissible in evidence in order for the opinion or inference to be admitted. Facts or data that are otherwise inadmissible shall not be disclosed to the members by the proponent of the opinion or inference unless the military judge determines that their probative value in assisting the members to evaluate the expert's opinion substantially outweighs their prejudicial effect.''

(f) Mil. R. Evid. 803(6) is amended to read as follows:

''*Records of regularly conducted activity.* A memorandum, report, record, or data compilation, in any form, of acts, events, conditions, opinions, or diagnoses, made at or near the time by, or from information transmitted by, a person with knowledge, if kept in the course of a regularly conducted business activity, and if it was the regular practice of that business activity to make the memorandum, report, record, or data compilation, all as shown by the testimony of the custodian or other qualified witness, or by certification that complies with Mil. R. Evid. 902(11) or any other statute permitting certification in a criminal proceeding in a court of the United States, unless the source of the information or the method or circumstances of preparation indicate a lack of trustworthiness. The term ''business'' as used in this paragraph includes the armed forces, a business, institution, association, profession, occupation, and calling of every kind, whether or not conducted for profit. Among those memoranda, reports, records, or data compilations normally admissible pursuant to this paragraph are enlistment papers, physical examination papers, outline-figure and fingerprint cards, forensic laboratory reports, chain of custody documents, morning reports and other personnel accountability documents, service records, officer and enlisted qualification records, logs, unit personnel diaries, individual equipment records, daily strength records of prisoners, and rosters of prisoners.''

(g) The following subsection (11) is inserted after Mil. R. Evid. 902(10) to read as follows:

''(11) *Certified domestic records of regularly conducted activity.* The original or a duplicate of a domestic record of regularly conducted activity that would be admissible under Mil. R. Evid. 803(6) if accompanied by a written declaration of its custodian or other qualified person, in a manner complying with any Act of Congress or rule prescribed by the Supreme Court pursuant to statutory authority, certifying that the record (A) was made at or near the time of the occurrence of the matters set forth by, or from information transmitted by, a person with knowledge of those matters; (B) was kept in the course of the regularly conducted activity; and (C) was made by the regularly conducted activity as a regular practice. A party intending to offer a record into evidence under this

paragraph must provide written notice of that intention to all adverse parties, and must make the record and declaration available for inspection sufficiently in advance of their offer into evidence to provide an adverse party with a fair opportunity to challenge them.''

(h) Mil. R. Evid. 1102 is amended to read as follows:

''(a) Amendments to the Federal Rules of Evidence shall apply to the Military Rules of Evidence 18 months after the effective date of such amendments, unless action to the contrary is taken by the President.

''(b) *Rules Determined Not To Apply.* The President has determined that the following Federal Rules of Evidence do not apply to the Military Rules of Evidence: Rules 301, 302, 415, and 902(12).''

Sec. 4. Part IV of the Manual for Courts-Martial, United States, is amended as follows:

(a) Paragraph 45(b)(2) is amended by deleting paragraph 45(b)(2)(c) and inserting the following after paragraph 45(b)(2)(b):

''(c)(1) That at the time of the sexual intercourse the person was under the age of 12; or

''(2) That at the time of the sexual intercourse the person had attained the age of 12 but was under the age of 16.''

(b) Paragraph 45(f) is amended to read as follows:

''f. *Sample specifications.*

''(1) *Rape.*

''In that _____ (personal jurisdiction data), did, (at/on board—location) (subject-matter jurisdiction data, if required), on or about _____ 20___, rape _____, (a person under the age of 12) (a person who had attained the age of 12 but was under the age of 16).

''(2) *Carnal Knowledge.*

''In that _____ (personal jurisdiction data), did, (at/on board—location) (subject-matter jurisdiction data, if required), on or about _____ 20___, commit the offense of carnal knowledge with _____, (a person under the age of 12) (a person who attained the age of 12 but was under the age of 16).''

(c) Paragraph 51(b) is amended to read as follows:

''(1) That the accused engaged in unnatural carnal copulation with a certain other person or with an animal.

''(Note: Add any of the following as applicable)

''(2) That the act was done with a child under the age of 12.

''(3) That the act was done with a child who had attained the age of 12 but was under the age of 16.

''(4) That the act was done by force and without the consent of the other person.''

(d) Paragraph 51(f) is amended to read as follows:

''f. *Sample specification.*

''In that _____ (personal jurisdiction data), did, (at/on board—location) (subject-matter jurisdiction data, if required), on or about _____ 20___, commit sodomy with _____, (a child under the age of 12) (a child who had attained the age of 12 but was under the age of 16) (by force and without the consent of the said _____).''

(e) Paragraph 57(c)(2)(b) is amended to read as follows:

''(b) *Material matter.* The false testimony must be with respect to a material matter, but that matter need not be the main issue in the case. Thus, perjury may be committed by giving false testimony with respect to the credibility of a material witness or in an affidavit in support of a request for a continuance, as well as by giving false testimony with respect to a fact from which a legitimate inference may be drawn as to the existence or nonexistence of a fact in issue.''

(f) Paragraph 100a(c)(1) is amended to read as follows:

''(1) *In general.* This offense is intended to prohibit and therefore deter reckless or wanton conduct that wrongfully creates a substantial risk of death or grievous bodily harm to others.''

(g) Paragraph 100a(f) is amended to read as follows:

''f. *Sample specification.*

''In that _____ (personal jurisdiction data), did, (at/on board—location) (subject-matter jurisdiction data, if required), on or about _____ 20___, wrongfully and (recklessly) (wantonly) engage in conduct, to wit: (describe conduct), conduct likely to cause death or grievous bodily harm to _____.''

Sec. 5. These amendments shall take effect 30 days from the date of this order.

(a) Nothing in these amendments shall be construed to make punishable any act done or omitted prior to the effective date of this order that was not punishable when done or omitted.

(b) Nothing in these amendments shall be construed to invalidate any nonjudicial punishment proceeding, restraint, investigation, referral of charges, trial in which arraignment occurred, or other action begun prior to the effective date of this order, and any such nonjudicial proceeding, restraint, investigation, referral of charges, trial, or other action may proceed in the same manner and with the same effect as if these amendments had not been prescribed.

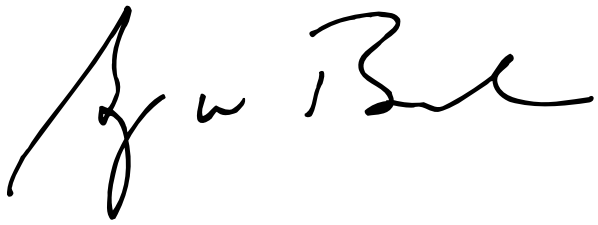

THE WHITE HOUSE,
December 3, 2004.

[FR Doc. 04–27076
Filed 12–7–04; 8:45 am]
Billing code 3195–01–P

Reader Aids

Federal Register

Vol. 69, No. 235

Wednesday, December 8, 2004

CUSTOMER SERVICE AND INFORMATION

Federal Register/Code of Federal Regulations	
General Information, indexes and other finding aids	**202–741–6000**
Laws	**741–6000**
Presidential Documents	
Executive orders and proclamations	**741–6000**
The United States Government Manual	**741–6000**
Other Services	
Electronic and on-line services (voice)	**741–6020**
Privacy Act Compilation	**741–6064**
Public Laws Update Service (numbers, dates, etc.)	**741–6043**
TTY for the deaf-and-hard-of-hearing	**741–6086**

ELECTRONIC RESEARCH

World Wide Web

Full text of the daily Federal Register, CFR and other publications is located at: **http://www.gpoaccess.gov/nara/index.html**

Federal Register information and research tools, including Public Inspection List, indexes, and links to GPO Access are located at: **http://www.archives.gov/federal_register/**

E-mail

FEDREGTOC-L (Federal Register Table of Contents LISTSERV) is an open e-mail service that provides subscribers with a digital form of the Federal Register Table of Contents. The digital form of the Federal Register Table of Contents includes HTML and PDF links to the full text of each document.

To join or leave, go to **http://listserv.access.gpo.gov** and select *Online mailing list archives, FEDREGTOC-L, Join or leave the list (or change settings);* then follow the instructions.

PENS (Public Law Electronic Notification Service) is an e-mail service that notifies subscribers of recently enacted laws.

To subscribe, go to **http://listserv.gsa.gov/archives/publaws-l.html** and select *Join or leave the list (or change settings);* then follow the instructions.

FEDREGTOC-L and **PENS** are mailing lists only. We cannot respond to specific inquiries.

Reference questions. Send questions and comments about the Federal Register system to: **fedreg.info@nara.gov**

The Federal Register staff cannot interpret specific documents or regulations.

FEDERAL REGISTER PAGES AND DATE, DECEMBER

69805–70050 1
70051–70178 2
70179–70350 3
70351–70536 6
70537–70870 7
70871–71338 8

CFR PARTS AFFECTED DURING DECEMBER

At the end of each month, the Office of the Federal Register publishes separately a List of CFR Sections Affected (LSA), which lists parts and sections affected by documents published since the revision date of each title.

3 CFR

Proclamations:
7850 70351
7851 70353

Executive Orders:
12473 (Amended by EO 13365) 71333
13286 (See EO 13362) 70173
13289 (See EO 13363) 70175
13303 (Amended by EO 13364) 70177
13315 (See EO 13364) 70177
13350 (See EO 13364) 70177
13362 70173
13363 70175
13364 70177
13365 71333

Administrative Orders:
Memorandums:
Memorandum of October 21, 2004 70349

5 CFR

317 70355
352 70355
359 70355
451 70355
530 70355
531 70355
534 70355
575 70355
841 69805
842 69805
843 69805

6 CFR

Proposed Rules:
5 70402

7 CFR

210 ..... 70871, 70872
220 70872
905 70874
1464 70367
1775 70877
1951 70883

Proposed Rules:
929 69996

9 CFR

166 70179
430 70051

12 CFR

Proposed Rules:
226 70925

13 CFR

121 70180

Proposed Rules:
121 70197

14 CFR

23 70885
39 ..... 69807, 69810, 70368, 70537, 70539
71 ..... 70053, 70185, 70371, 70372, 70541, 70542
73 70887

Proposed Rules:
39 ..... 69829, 69832, 69834, 69836, 69838, 69842, 69844, 70202, 70204, 70564, 70566, 70568, 70571, 70574, 70936, 70938
71 70208

15 CFR

750 69814
806 70543

Proposed Rules:
710 70754
711 70754
712 70754
713 70754
714 70754
715 70754
716 70754
717 70754
718 70754
719 70754
720 70754
721 70754
722 70754
723 70754
724 70754
725 70754
726 70754
727 70754
728 70754
729 70754

17 CFR

240 70852
248 71322

Proposed Rules:
240 ..... 71126, 71256
242 71126
249 71126

18 CFR

Proposed Rules:
Ch. 1 70077

21 CFR

510 70053
520 70053
522 ..... 70054, 70055
558 70056

Proposed Rules:
165 70082

1301 70576

22 CFR

122 70888
129 70888

23 CFR

655 69815

24 CFR

570 70864
Proposed Rules:
206 70244
2004 70868
3280 70016

25 CFR

Proposed Rules:
542 69847

26 CFR

1 ....70547, 70550
25 70547
31 ....69819, 70547
53 70547
55 70547
156 70547
301 70547
602 ....70547, 70550
Proposed Rules:
1 70578
26 70404

27 CFR

9 70889

29 CFR

1926 70373
4011 69820
4022 69820
4044 69821

30 CFR

18 70752

33 CFR

100 ....70551, 70552
117 ....70057, 70059, 70373
165 70374
Proposed Rules:
100 70578
117 ....70091, 70209
165 70211

36 CFR

13 70061
242 70074
Proposed Rules:
242 70940

37 CFR

201 70377
253 69822

40 CFR

9 70552
52 ....69823, 70893, 70895
180 70897
271 70898
712 70552
Proposed Rules:
52 ....69863, 70944, 70945
60 69864
63 69864
271 70946
721 70404

41 CFR

Proposed Rules:
51-2 70214
51-3 70214
51-4 70214

43 CFR

44 70557
1880 70557

44 CFR

64 70377
65 70185
67 ....70191, 70192

47 CFR

0 70316
1 70378
4 70316
18 70562
27 70378
63 70316
74 70378
90 70378
101 70378

49 CFR

171 70902
173 70902
174 70902
175 70902
176 70902
177 70902
178 70902
571 70904
585 70904
586 70904
589 70904
590 70904
596 70904
597 70904
Proposed Rules:
572 70947

50 CFR

14 70379
17 70382
100 70074
222 69826
223 69826
622 70196
635 70396
648 ....70919, 70923
679 ....69828, 70924
Proposed Rules:
17 ....69878, 70412, 70580, 70971, 71284
100 70940
229 70094
648 70414
660 70973
679 ....70589, 70605, 70974

REMINDERS

The items in this list were editorially compiled as an aid to Federal Register users. Inclusion or exclusion from this list has no legal significance.

RULES GOING INTO EFFECT DECEMBER 8, 2004

COMMERCE DEPARTMENT

National Oceanic and Atmospheric Administration

Fishery conservation and management:

Alaska; fisheries of Exclusive Economic Zone—

Gulf of Alaska and Bering Sea and Aleutian Islands groundfish; published 11-8-04

Northeastern United States fisheries—

Atlantic herring; published 12-8-04

FEDERAL TRADE COMMISSION

Appliances, consumer; energy consumption and water use information in labeling and advertising:

Comparability ranges—

Compact dishwashers, central air conditioners, and heat pumps; published 9-9-04

STATE DEPARTMENT

International Traffic in Arms regulations:

Registration fee change; published 12-8-04

COMMENTS DUE NEXT WEEK

AGRICULTURE DEPARTMENT

Agricultural Marketing Service

Beef promotion and research; comments due by 12-13-04; published 11-12-04 [FR 04-25198]

Cotton classing, testing and standards:

Classification services to growers; 2004 user fees; Open for comments until further notice; published 5-28-04 [FR 04-12138]

AGRICULTURE DEPARTMENT

Rural Business-Cooperative Service

Special programs:

Farm Security and Rural Investment Act of 2002; implementation—

Renewable Energy Systems and Energy Efficiency Improvements, Grant, Guaranteed Loan, and Direct Loan Program; comments due by 12-15-04; published 11-15-04 [FR 04-25239]

COMMERCE DEPARTMENT

Industry and Security Bureau

Export administration regulations:

Knowledge and red flags; definition and guidance revisions; safe harbor; comments due by 12-15-04; published 11-15-04 [FR 04-25309]

COMMERCE DEPARTMENT

National Oceanic and Atmospheric Administration

Civil procedures; comments due by 12-13-04; published 10-12-04 [FR 04-22598]

Fishery conservation and management:

Alaska; fisheries of Exclusive Economic Zone—

Bering Sea and Aleutian Islands king and tanner crab; comments due by 12-13-04; published 10-29-04 [FR 04-24103]

Caribbean, Gulf, and South Atlantic fisheries—

Gulf of Mexico reef fish; comments due by 12-16-04; published 11-16-04 [FR 04-25429]

Magnuson-Stevens Act provisions—

Pacific Coast groundfish; fishing capacity reduction program.; comments due by 12-16-04; published 11-16-04 [FR 04-25428]

Marine mammals:

Taking and importation—

Kodiak Island, AK; rocket launches at Kodiak Launch Complex; pinnipeds; comments due by 12-13-04; published 10-29-04 [FR 04-24234]

COURT SERVICES AND OFFENDER SUPERVISION AGENCY FOR THE DISTRICT OF COLUMBIA

Semi-annual agenda; Open for comments until further notice; published 12-22-03 [FR 03-25121]

ENERGY DEPARTMENT

Meetings:

Environmental Management Site-Specific Advisory Board—

Oak Ridge Reservation, TN; Open for comments until further notice; published 11-19-04 [FR 04-25693]

ENERGY DEPARTMENT

Energy Efficiency and Renewable Energy Office

Commercial and industrial equipment; energy efficiency program:

Test procedures and efficiency standards—

Commercial packaged boilers; Open for comments until further notice; published 10-21-04 [FR 04-17730]

ENERGY DEPARTMENT

Federal Energy Regulatory Commission

Alaska Natural Gas Pipeline Act:

Conduct of open seasons for natural gas transportation projects; comments due by 12-17-04; published 11-23-04 [FR 04-25933]

Electric rate and corporate regulation filings:

Virginia Electric & Power Co. et al.; Open for comments until further notice; published 10-1-03 [FR 03-24818]

ENVIRONMENTAL PROTECTION AGENCY

Air quality implementation plans; approval and promulgation; various States:

California; comments due by 12-16-04; published 11-16-04 [FR 04-25301]

Illinois; comments due by 12-13-04; published 11-12-04 [FR 04-24916]

Iowa; comments due by 12-13-04; published 11-12-04 [FR 04-24918]

Environmental statements; availability, etc.:

Coastal nonpoint pollution control program—

Minnesota and Texas; Open for comments until further notice; published 10-16-03 [FR 03-26087]

Pesticides; tolerances in food, animal feeds, and raw agricultural commodities:

Mepanipyrim; comments due by 12-13-04; published 10-13-04 [FR 04-22963]

Toxic substances:

Enzymes and proteins; nomenclature inventory; comments due by 12-15-04; published 11-15-04 [FR 04-25307]

Water pollution control:

National Pollutant Discharge Elimination System—

Concentrated animal feeding operations in New Mexico and Oklahoma; general permit for discharges; Open for comments until further notice; published 12-7-04 [FR 04-26817]

Water pollution; effluent guidelines for point source categories:

Meat and poultry products processing facilities; Open for comments until further notice; published 9-8-04 [FR 04-12017]

FARM CREDIT ADMINISTRATION

Farm credit system:

Borrower rights; comments due by 12-16-04; published 11-16-04 [FR 04-25397]

FEDERAL COMMUNICATIONS COMMISSION

Radio stations; table of assignments:

Alabama and Mississippi; comments due by 12-13-04; published 11-17-04 [FR 04-25511]

Minnesota and Oklahoma; comments due by 12-16-04; published 11-10-04 [FR 04-25058]

Oklahoma and Texas; comments due by 12-16-04; published 11-10-04 [FR 04-25061]

Wyoming; comments due by 12-16-04; published 11-10-04 [FR 04-25057]

HEALTH AND HUMAN SERVICES DEPARTMENT

Food and Drug Administration

Food additives:

Mannitol; comments due by 12-15-04; published 11-15-04 [FR 04-25243]

Reports and guidance documents; availability, etc.:

Evaluating safety of antimicrobial new animal drugs with regard to their microbiological effects on bacteria of human health concern; Open for comments until further notice; published 10-27-03 [FR 03-27113]

Medical devices—

Dental noble metal alloys and base metal alloys; Class II special controls; Open for

comments until further notice; published 8-23-04 [FR 04-19179]

HOMELAND SECURITY DEPARTMENT

Coast Guard

Anchorage regulations:
Maryland; comments due by 12-13-04; published 10-12-04 [FR 04-22745]

Drawbridge operations:
Delaware; comments due by 12-13-04; published 10-12-04 [FR 04-22850]

HOUSING AND URBAN DEVELOPMENT DEPARTMENT

Mortgage and loan insurance programs:
Federal National Mortgage Association (Fannie Mae) and Federal Home Loan Mortgage Corporation (Freddie Mac)—
Government-sponsored enterprises housing goals (2005-2008 CYs); comments due by 12-17-04; published 11-2-04 [FR 04-24100]

INTERIOR DEPARTMENT

Fish and Wildlife Service

Endangered and threatened species permit applications
Recovery plans—
Paiute cutthroat trout; Open for comments until further notice; published 9-10-04 [FR 04-20517]

Endangered and threatened species:
Critical habitat designations—
Buena Vista Lake shrew; comments due by 12-15-04; published 11-30-04 [FR 04-26472]
Southwestern willow flycatcher; comments due by 12-13-04; published 10-12-04 [FR 04-22394]
Ute ladies'-tresses orchid; five-year review; comments due by 12-13-04; published 10-12-04 [FR 04-22735]

INTERIOR DEPARTMENT

Surface Mining Reclamation and Enforcement Office

Abandoned mine land reclamation:
Coal production fees and fee allocation
Republication; comments due by 12-16-04; published 11-29-04 [FR 04-26195]

NUCLEAR REGULATORY COMMISSION

Environmental statements; availability, etc.:
Fort Wayne State Developmental Center; Open for comments until further notice; published 5-10-04 [FR 04-10516]

PERSONNEL MANAGEMENT OFFICE

Post-employment restrictions; notification; comments due by 12-14-04; published 10-15-04 [FR 04-23194]

POSTAL RATE COMMISSION

Practice and procedure:
Postal service; definition; comments due by 12-15-04; published 11-18-04 [FR 04-25567]

SMALL BUSINESS ADMINISTRATION

Disaster loan areas:
Maine; Open for comments until further notice; published 2-17-04 [FR 04-03374]

OFFICE OF UNITED STATES TRADE REPRESENTATIVE

Trade Representative, Office of United States

Generalized System of Preferences:
2003 Annual Product Review, 2002 Annual Country Practices Review, and previously deferred product decisions; petitions disposition; Open for comments until further notice; published 7-6-04 [FR 04-15361]

TRANSPORTATION DEPARTMENT

Economic regulations:
Commuter air carrier registrations; elimination; comments due by 12-13-04; published 10-28-04 [FR 04-23859]

TRANSPORTATION DEPARTMENT

Federal Aviation Administration

Airmen certification:
Second-in-command pilot type rating; comments due by 12-16-04; published 11-16-04 [FR 04-25415]

Airworthiness directives:
Airbus; comments due by 12-17-04; published 11-22-04 [FR 04-25793]
Boeing; comments due by 12-13-04; published 10-29-04 [FR 04-24220]
Dornier; comments due by 12-13-04; published 11-12-04 [FR 04-25192]
EXTRA Flugzeugbau GmbH; comments due by 12-15-04; published 11-12-04 [FR 04-25193]
Gippsland Aeronautics Pty. Ltd.; comments due by 12-15-04; published 11-8-04 [FR 04-24819]
Glaser-Dirks Flugzeugbau GmbH; comments due by 12-13-04; published 11-8-04 [FR 04-24818]
Gulfstream; comments due by 12-17-04; published 10-18-04 [FR 04-23027]
Hartzell Propeller Inc.; comments due by 12-13-04; published 10-14-04 [FR 04-22728]
McDonnell Douglas; comments due by 12-13-04; published 10-27-04 [FR 04-24032]

Class D airspace; comments due by 12-15-04; published 11-8-04 [FR 04-24848]

VOR Federal airways; comments due by 12-13-04; published 10-28-04 [FR 04-24146]

TRANSPORTATION DEPARTMENT

Research and Special Programs Administration

Hazardous materials:
Transportation—
Compressed oxygen, other oxidizing gases, and chemical oxygen generators on aircraft; comments due by 12-13-04; published 8-4-04 [FR 04-17747]

TREASURY DEPARTMENT

Internal Revenue Service

Income taxes:
Purchase price allocation in deemed and actual asset acquisitions; nuclear decommissioning funds treatment; cross-reference; comments due by 12-15-04; published 9-16-04 [FR 04-20915]

LIST OF PUBLIC LAWS

This is a continuing list of public bills from the current session of Congress which have become Federal laws. It may be used in conjunction with "P L U S" (Public Laws Update Service) on 202–741–6043. This list is also available online at *http://www.archives.gov/federal_register/public_laws/public_laws.html*.

The text of laws is not published in the **Federal Register** but may be ordered in "slip law" (individual pamphlet) form from the Superintendent of Documents, U.S. Government Printing Office, Washington, DC 20402 (phone, 202–512–1808). The text will also be made available on the Internet from GPO Access at *http://www.gpoaccess.gov/plaws/index.html*. Some laws may not yet be available.

H.R. 1047/P.L. 108–429

Miscellaneous Trade and Technical Corrections Act of 2004 (Dec. 3, 2004; 118 Stat. 2434)

H.R. 1630/P.L. 108–430

Petrified Forest National Park Expansion Act of 2004 (Dec. 3, 2004; 118 Stat. 2606)

H.R. 2912/P.L. 108–431

To reaffirm the inherent sovereign rights of the Osage Tribe to determine its membership and form of government. (Dec. 3, 2004; 118 Stat. 2609)

H.J. Res. 110/P.L. 108–432

Recognizing the 60th anniversary of the Battle of the Bulge during World War II. (Dec. 3, 2004; 118 Stat. 2611)

H.J. Res. 111/P.L. 108–433

Appointing the day for the convening of the first session of the One Hundred Ninth Congress. (Dec. 3, 2004; 118 Stat. 2613)

H.J. Res. 115/P.L. 108–434

Making further continuing appropriations for the fiscal year 2005, and for other purposes. (Dec. 3, 2004; 118 Stat. 2614)

S. 150/P.L. 108–435

Internet Tax Nondiscrimination Act (Dec. 3, 2004; 118 Stat. 2615)

S. 434/P.L. 108–436

Idaho Panhandle National Forest Improvement Act of 2004 (Dec. 3, 2004; 118 Stat. 2620)

S. 1146/P.L. 108–437

Three Affiliated Tribes Health Facility Compensation Act (Dec. 3, 2004; 118 Stat. 2623)

S. 1241/P.L. 108–438

Kate Mullany National Historic Site Act (Dec. 3, 2004; 118 Stat. 2625)

S. 1727/P.L. 108–439

To authorize additional appropriations for the Reclamation Safety of Dams Act of 1978. (Dec. 3, 2004; 118 Stat. 2627)

S. 2214/P.L. 108–440

To designate the facility of the United States Postal Service located at 3150 Great

Northern Avenue in Missoula, Montana, as the ''Mike Mansfield Post Office''. (Dec. 3, 2004; 118 Stat. 2629)

S. 2302/P.L. 108–441
To improve access to physicians in medically underserved areas. (Dec. 3, 2004; 118 Stat. 2630)

S. 2640/P.L. 108–442
To designate the facility of the United States Postal Service located at 1050 North Hills Boulevard in Reno, Nevada, as the ''Guardians of Freedom Memorial Post Office Building'' and to authorize the installation of a plaque at such site, and for other purposes. (Dec. 3, 2004; 118 Stat. 2632)

S. 2693/P.L. 108–443
To designate the facility of the United States Postal Service located at 1475 Western Avenue, Suite 45, in Albany, New York, as the ''Lieutenant John F. Finn Post Office''. (Dec. 3, 2004; 118 Stat. 2634)

S. 2965/P.L. 108–444
To amend the Livestock Mandatory Price Reporting Act of 1999 to modify the termination date for mandatory price reporting. (Dec. 3, 2004; 118 Stat. 2635)

S. 2484/P.L. 108–445
Department of Veterans Affairs Health Care Personnel Enhancement Act of 2004 (Dec. 3, 2004; 118 Stat. 2636)

Last List December 2, 2004

Public Laws Electronic Notification Service (PENS)

PENS is a free electronic mail notification service of newly enacted public laws. To subscribe, go to *http://listserv.gsa.gov/archives/publaws-l.html*

Note: This service is strictly for E-mail notification of new laws. The text of laws is not available through this service. **PENS** cannot respond to specific inquiries sent to this address.